AUTHENTICATED U.S. GOVERNMENT INFORMATION GPO

Federal Register

7–23–10 Friday
Vol. 75 No. 141 July 23, 2010

Pages 43031–43394

The **FEDERAL REGISTER** (ISSN 0097–6326) is published daily, Monday through Friday, except official holidays, by the Office of the Federal Register, National Archives and Records Administration, Washington, DC 20408, under the Federal Register Act (44 U.S.C. Ch. 15) and the regulations of the Administrative Committee of the Federal Register (1 CFR Ch. I). The Superintendent of Documents, U.S. Government Printing Office, Washington, DC 20402 is the exclusive distributor of the official edition. Periodicals postage is paid at Washington, DC.

The **FEDERAL REGISTER** provides a uniform system for making available to the public regulations and legal notices issued by Federal agencies. These include Presidential proclamations and Executive Orders, Federal agency documents having general applicability and legal effect, documents required to be published by act of Congress, and other Federal agency documents of public interest.

Documents are on file for public inspection in the Office of the Federal Register the day before they are published, unless the issuing agency requests earlier filing. For a list of documents currently on file for public inspection, see *www.federalregister.gov.*

The seal of the National Archives and Records Administration authenticates the Federal Register as the official serial publication established under the Federal Register Act. Under 44 U.S.C. 1507, the contents of the **Federal Register** shall be judicially noticed.

The **Federal Register** is published in paper and on 24x microfiche. It is also available online at no charge as one of the databases on GPO Access, a service of the U.S. Government Printing Office.

The online edition of the **Federal Register**, *www.gpoaccess.gov/nara,* available through GPO Access, is issued under the authority of the Administrative Committee of the Federal Register as the official legal equivalent of the paper and microfiche editions (44 U.S.C. 4101 and 1 CFR 5.10). It is updated by 6 a.m. each day the **Federal Register** is published and includes both text and graphics from Volume 59, Number 1 (January 2, 1994) forward.

For more information about GPO Access, contact the GPO Access User Support Team, call toll free 1-888-293-6498; DC area 202-512-1530; fax at 202-512-1262; or via e-mail at *gpoaccess@gpo.gov.* The Support Team is available between 7:00 a.m. and 9:00 p.m. Eastern Time, Monday–Friday, except official holidays.

The annual subscription price for the **Federal Register** paper edition is $749 plus postage, or $808, plus postage, for a combined **Federal Register, Federal Register** Index and List of CFR Sections Affected (LSA) subscription; the microfiche edition of the **Federal Register** including the **Federal Register** Index and LSA is $165, plus postage. Six month subscriptions are available for one-half the annual rate. The prevailing postal rates will be applied to orders according to the delivery method requested. The price of a single copy of the daily **Federal Register,** including postage, is based on the number of pages: $11 for an issue containing less than 200 pages; $22 for an issue containing 200 to 400 pages; and $33 for an issue containing more than 400 pages. Single issues of the microfiche edition may be purchased for $3 per copy, including postage. Remit check or money order, made payable to the Superintendent of Documents, or charge to your GPO Deposit Account, VISA, MasterCard, American Express, or Discover. Mail to: U.S. Government Printing Office—New Orders, P.O. Box 979050, St. Louis, MO 63197-9000; or call toll free 1-866-512-1800, DC area 202-512-1800; or go to the U.S. Government Online Bookstore site, see *bookstore.gpo.gov.*

There are no restrictions on the republication of material appearing in the **Federal Register.**

How To Cite This Publication: Use the volume number and the page number. Example: 75 FR 12345.

Postmaster: Send address changes to the Superintendent of Documents, Federal Register, U.S. Government Printing Office, Washington, DC 20402, along with the entire mailing label from the last issue received.

SUBSCRIPTIONS AND COPIES

PUBLIC

Subscriptions:

Paper or fiche	**202–512–1800**
Assistance with public subscriptions	**202–512–1806**

General online information **202–512–1530; 1–888–293–6498**

Single copies/back copies:

Paper or fiche	**202–512–1800**
Assistance with public single copies	**1–866–512–1800 (Toll-Free)**

FEDERAL AGENCIES

Subscriptions:

Paper or fiche	**202–741–6005**
Assistance with Federal agency subscriptions	**202–741–6005**

FEDERAL REGISTER WORKSHOP

THE FEDERAL REGISTER: WHAT IT IS AND HOW TO USE IT

FOR: Any person who uses the Federal Register and Code of Federal Regulations.

WHO: Sponsored by the Office of the Federal Register.

WHAT: Free public briefings (approximately 3 hours) to present:

1. The regulatory process, with a focus on the Federal Register system and the public's role in the development of regulations.
2. The relationship between the Federal Register and Code of Federal Regulations.
3. The important elements of typical Federal Register documents.
4. An introduction to the finding aids of the FR/CFR system.

WHY: To provide the public with access to information necessary to research Federal agency regulations which directly affect them. There will be no discussion of specific agency regulations.

WHEN: Tuesday, September 14, 2010
9 a.m.–12:30 p.m.

WHERE: Office of the Federal Register
Conference Room, Suite 700
800 North Capitol Street, NW.
Washington, DC 20002

RESERVATIONS: (202) 741–6008

Printed on recycled paper.

Contents

Federal Register

Vol. 75, No. 141

Friday, July 23, 2010

Administration on Aging
See Aging Administration

Agency for Healthcare Research and Quality
NOTICES
Agency Information Collection Activities; Proposals, Submissions, and Approvals, 43169–43172
Meetings:
Healthcare Policy and Research Special Emphasis Panel, 43182

Agency for Toxic Substances and Disease Registry
NOTICES
Charter Renewal:
Board of Scientific Counselors, National Center for Environmental Health, 43172

Aging Administration
NOTICES
Agency Information Collection Activities; Proposals, Submissions, and Approvals, 43168

Agricultural Marketing Service
RULES
Changes to District Boundaries:
Kiwifruit Grown in California, 43038–43039
Modification of the Aflatoxin Regulations:
Pistachios Grown in California, Arizona, and New Mexico, 43045–43049
National Sheep Industry Improvement Center, 43031–43037
Suspension of Reporting and Assessment Requirements:
Fresh Prunes Grown in Designated Counties in Washington and in Umatilla County, OR, 43039–43042
Temporary Changes to the Handling Regulations and Reporting Requirements:
Irish Potatoes Grown in Washington, 43042–43045
NOTICES
United States Standards for Grades of Frozen Vegetables, 43141–43142
United States Standards for Grades of Refried Beans; Withdrawal, 43142–43143

Agriculture Department
See Agricultural Marketing Service
See Food Safety and Inspection Service
See Foreign Agricultural Service
See Forest Service
RULES
Revision of Delegations of Authority, 43366–43393

Blind or Severely Disabled, Committee for Purchase From People Who Are
See Committee for Purchase From People Who Are Blind or Severely Disabled

Centers for Disease Control and Prevention
NOTICES
Meetings:
Advisory Board on Radiation and Worker Health, 43180–43181
Statement of Organization, Functions and Delegations of Authority, 43190–43193

Centers for Medicare & Medicaid Services
PROPOSED RULES
Medicare Program:
Home Health Prospective Payment System Rate Update (CY 2011); Changes in Certification Requirements for Home Health Agencies and Hospices, 43236–43306
NOTICES
Agency Information Collection Activities; Proposals, Submissions, and Approvals, 43167–43169
Medicare and Medicaid Programs:
Announcement of an Application from a Hospital Requesting Waiver for Organ Procurement Service Area, 43177–43178
Medicare Program:
Solicitation for Proposals for the Medicare Imaging Demonstration, 43178–43180

Children and Families Administration
NOTICES
Maternal, Infant, and Early Childhood Home Visiting Program, 43172–43177
Requests for Public Comment:
Adoption and Foster Care Analysis and Reporting System (AFCARS), 43187–43188
Redesign of Statewide Automated Child Welfare Information System Requirements, 43188–43190

Commerce Department
See International Trade Administration
See National Oceanic and Atmospheric Administration

Committee for Purchase From People Who Are Blind or Severely Disabled
NOTICES
Procurement List; Additions and Deletions, 43152–43153
Procurement List; Proposed Additions and Deletions, 43153–43155

Consumer Product Safety Commission
PROPOSED RULES
Full-Size and Non-Full Size Baby Cribs; Withdrawal, 43107
Revocation of Requirements for Full-Size Baby Cribs and Non-Full-Size Baby Cribs, 43107–43109
Safety Standards for Full-Size Baby Cribs and Non-Full-Size Baby Cribs, 43308–43327

Defense Department
RULES
Federal Acquisition Regulations; Correction, 43090
NOTICES
Meetings:
Missile Defense Advisory Committee, 43156

Department of Transportation
See Pipeline and Hazardous Materials Safety Administration

Education Department
NOTICES
Agency Information Collection Activities; Proposals, Submissions, and Approvals, 43156–43158

Employee Benefits Security Administration
RULES
Group Health Plans and Health Insurance Issuers:
Internal Claims and Appeals and External Review Processes under the Patient Protection and Affordable Care Act, 43330–43364

Employment and Training Administration
NOTICES
Requests for Certifications of Compliance:
Rural Industrialization Loan and Grant Program, 43207

Energy Department
See Energy Information Administration
See Federal Energy Regulatory Commission
NOTICES
Amended Records of Decision:
Decommissioning of Eight Surplus Production Reactors at the Hanford Site, Richland, WA, 43158–43159
Solicitation of Nominations:
Biomass Research and Development Technical Advisory Committee; Correction, 43159

Energy Information Administration
NOTICES
Agency Information Collection Activities; Proposals, Submissions, and Approvals, 43159–43160

Environmental Protection Agency
RULES
Approval and Promulgation of Air Quality Implementation Plans:
Texas; Revisions to Emission Inventory Reporting Requirements and Conformity of General Federal Action, etc., 43062–43066
Approval and Promulgation of Implementation Plans:
New York Reasonably Available Control Technology and Reasonably Available Control Measures, 43066–43069
Approval of One-Year Extension for Attaining the 1997 8-Hour Ozone Standard:
Baltimore Moderate Nonattainment Area, 43069–43072
Exemptions from the Requirement of a Tolerance:
2-Propanol, 1′,1′-nitrilotris, 43076–43082
Trichoderma Hamatum Isolate 382, 43072–43076
National Oil and Hazardous Substances Pollution Contingency Plan; National Priorities List:
Partial Deletion of the Letterkenny Army Depot Southeastern (SE) Area; et al., 43082–43088
PROPOSED RULES
Approval and Promulgation of Air Quality Implementation Plans:
Texas; Revisions to Emissions Inventory Reporting Requirements and Conformity of General Federal Actions, etc., 43114
Approval of One-Year Extension for Attaining the 1997 8-Hour Ozone Standard:
Baltimore Moderate Nonattainment Area, 43114–43115
National Oil and Hazardous Substances Pollution Contingency Plan; National Priorities List:
Intent to Partially Delete Letterkenny Army Depot Southeastern (SE) Area, et al., 43115–43116
NOTICES
Clean Water Act Section 303(d):
Final Agency Action on One Arkansas Total Maximum Daily Load, 43160
Environmental Impact Statements:
Weekly Receipt, 43160–43161
Meetings:
Environmental Engineering Committee, 43161–43162
Transfer of Data:
Tetrahedron, Inc., et al., 43162–43163

Federal Aviation Administration
RULES
Airworthiness Directives:
Empresa Brasileira de Aeronautica S.A. (EMBRAER) Model EMB–500 Airplanes, 43049–43059
PROPOSED RULES
Airworthiness Directives:
Boeing Co. Model 757 Airplanes, 43097–43099
CENTRAIR Models 101, 101A, 101P, and 101AP Gliders, 43103–43105
General Electric Co. (GE) CT7–9C and –9C3 Turboprop Engines, 43099–43101
PIAGGIO AERO INDUSTRIES S.p.A Model PIAGGIO P–180 Airplanes, 43101–43103, 43105–43107
Piaggio Aero Industries S.p.A. Model PIAGGIO P–180 Airplanes, 43095–43097
Viking Air Limited Model DHC–7 Airplanes, 43092–43095

Federal Communications Commission
RULES
Personal Communications Services and Miscellaneous Wireless Communications Services; CFR Correction, 43088–43090
NOTICES
Agency Information Collection Activities; Proposals, Submissions, and Approvals, 43163–43164
Establishment of Committees:
Emergency Response Interoperability Center Public Safety Advisory Committee, 43164

Federal Contract Compliance Programs Office
PROPOSED RULES
Affirmative Action and Nondiscrimination Obligations of Contractors and Subcontractors:
Evaluation of Affirmative Action Provisions, 43116–43118

Federal Energy Regulatory Commission
RULES
Mandatory Reliability Standards:
Calculation of Available Transfer Capability, etc., 43059–43062

Federal Highway Administration
NOTICES
Agency Information Collection Activities; Proposals, Submissions, and Approvals, 43229–43230

Federal Reserve System
NOTICES
Change in Bank Control:
Acquisition of Shares of Bank or Bank Holding Companies, 43164–43165
Formations of, Acquisitions by, and Mergers of Bank Holding Companies, 43165

Food and Drug Administration
NOTICES
International Conference on Harmonisation; Draft Guidance on Q4B Evaluation and Recommendation of Pharmacopoeial Texts:
Annex 13 on Bulk Density and Tapped Density of Powders General Chapter; Availability; Correction, 43172
Patient Protection and Affordable Care Act of 2010; Menu and Vending Machine Labeling Requirements:
Voluntary Registration by Authorized Officials of Non-Covered Retail Food Establishments and Vending Machine Operators, 43182–43184

Food Safety and Inspection Service
NOTICES
Agency Information Collection Activities; Proposals, Submissions, and Approvals, 43137–43138
Re-establishment of National Advisory Committee on Meat and Poultry Inspection, 43140

Foreign Agricultural Service
NOTICES
Trade Adjustment for Farmers, 43140–43141

Foreign Assets Control Office
NOTICES
Designation of Anwar Al–Aulaqi Pursuant to Executive Order 13224 and Global Terrorism Sanctions Regulations, 43233–43234

Forest Service
NOTICES
Environmental Impact Statements; Availability, etc.:
Ochoco National Forest; Lookout Ranger Mountain District, 43138–43139
Meetings:
Gogebic Resource Advisory Committee, 43139–43140
Humboldt Resource Advisory Committee, 43140

General Services Administration
RULES
Federal Acquisition Regulations; Correction, 43090
NOTICES
Agency Information Collection Activities; Proposals, Submissions, and Approvals:
Central Contractor Registration Requirements for Prime Grant Recipients, 43166
FFATA Subaward and Executive Compensation Reporting Requirements, 43165–43166
FSRS Registration and Prime Awardee Entity-Related Information Reporting Requirements, 43166–43167

Geological Survey
NOTICES
Agency Information Collection Activities; Proposals, Submissions, and Approvals:
Comprehensive Test Ban Treaty, 43198

Health and Human Services Department
See Agency for Healthcare Research and Quality
See Agency for Toxic Substances and Disease Registry
See Aging Administration
See Centers for Disease Control and Prevention
See Centers for Medicare & Medicaid Services
See Children and Families Administration
See Food and Drug Administration
See Health Resources and Services Administration
See National Institutes of Health
RULES
Group Health Plans and Health Insurance Issuers:
Internal Claims and Appeals and External Review Processes under the Patient Protection and Affordable Care Act, 43330–43364

Health Resources and Services Administration
NOTICES
Maternal, Infant, and Early Childhood Home Visiting Program, 43172–43177

Housing and Urban Development Department
NOTICES
Federal Property Suitable as Facilities to Assist the Homeless, 43194–43195
Funding Availabilities:
2010 Fiscal Year Alaska Native/Native Hawaiian Institutions Assisting Communities Program, 43196
2010 Fiscal Year Doctoral Dissertation Research Grant Program, 43195
2010 Fiscal Year Hispanic-Serving Institutions Assisting Communities Program, 43195–43196
2010 Fiscal Year Tribal Colleges and Universities Program, 43196
Funding Availability for Fiscal Year 2010:
Historically Black Colleges and Universities Program, 43196–43197
Public Housing Assessment System:
Asset Management Transition Year 2 Extension, 43197–43198

Interior Department
See Geological Survey
See Land Management Bureau
See National Park Service

Internal Revenue Service
RULES
Group Health Plans and Health Insurance Issuers:
Internal Claims and Appeals and External Review Processes under the Patient Protection and Affordable Care Act, 43330–43364
PROPOSED RULES
Requirements for Group Health Plans and Health Insurance Issuers:
Internal Claims and Appeals and External Review Processes under the Patient Protection and Affordable Care Act, 43109–43110
User Fees Relating to Enrollment and Preparer Tax Identification Numbers, 43110–43114

International Trade Administration
NOTICES
Antidumping Duty Order:
Certain Steel Grating from the People's Republic of China, 43143–43144
Countervailing Duty Order:
Certain Steel Grating from the People's Republic of China, 43144–43145
Final Results of the 2008–2009 Antidumping Duty Administrative Review:
Saccharin from the People's Republic of China, 43146–43147
Partial Rescission of the First Antidumping Duty Administrative Review:
Certain Steel Nails from the People's Republic of China, 43149–43150

International Trade Commission
NOTICES
Final Determinations:
Certain Voltage Regulators, Component Thereof and Products Containing Same, 43205–43206
Termination of Investigations:
Certain Wireless Communications System Server Software, Wireless Handheld Devices and Battery Packs, 43206

Justice Department
NOTICES
Lodging of Consent Decree Under the Clean Water Act, 43206–43207

Labor Department
See Employee Benefits Security Administration
See Employment and Training Administration
See Federal Contract Compliance Programs Office

Land Management Bureau
NOTICES
Alaska Native Claims Selection, 43198–43199
Meetings:
Central Montana Resource Advisory Council, 43199
Proposed Supplementary Rules for Public Lands in Colorado:
Arkansas River Travel Management Area in Area in Chaffee, Custer, and Fremont Counties, 43200–43202
Realty Actions:
Recreation and Public Purposes Act Classification for Conveyance of Public Lands in Blaine County, ID, 43204–43205
Recreation and Public Purposes Act Classification, Lake County, CO, 43202–43203

National Aeronautics and Space Administration
RULES
Federal Acquisition Regulations; Correction, 43090

National Institutes of Health
NOTICES
Meetings:
Center for Scientific Review, 43182
National Institute of Allergy and Infectious Diseases, 43181
National Institute of General Medical Sciences, 43180
Record of Decision:
Transport of Laboratory Personnel Potentially Exposed to Infectious Agents, etc., 43184–43187

National Oceanic and Atmospheric Administration
RULES
Fisheries of the Exclusive Economic Zone Off Alaska:
Pacific Ocean Perch in the Western Yakutat District of the Gulf of Alaska; Closure, 43090–43091
Fisheries of the Northeastern United States:
Atlantic Mackerel, Squid, and Butterfish Fisheries; Adjustment to the Loligo Trimester 2 and 3 Quota; Correction, 43090
PROPOSED RULES
Fisheries of the Exclusive Economic Zone Off Alaska:
Gulf of Alaska License Limitation Program, 43118–43136
NOTICES
Evaluation of State Coastal Management Programs and National Estuarine Research Reserves, 43145–43146
Fisheries of the Exclusive Economic Zone Off Alaska:
Bering Sea and Aleutian Islands Crab Rationalization Cost Recovery Program, 43147
Meetings:
Gulf of Mexico Fishery Management Council, 43147–43148
New England Fishery Management Council, 43148–43149
Permits:
Marine Mammals; File Nos. 10018, 13846, 14451, 14585, 14599, 14122, 14296, and 14353, 43150–43152

National Park Service
NOTICES
Meetings:
Flight 93 National Memorial Advisory Commission, 43199–43200

Nuclear Regulatory Commission
NOTICES
Issuance of Regulatory Guide, 43207–43208
Withdrawal of Regulatory Guide 5.17, 43208

Pipeline and Hazardous Materials Safety Administration
NOTICES
Applications for Special Permits, 43230–43231
Revisions of the Emergency Response Guidebook, 43232–43233

Securities and Exchange Commission
NOTICES
Agency Information Collection Activities; Proposals, Submissions, and Approvals, 43208–43209
Meetings; Sunshine Act, 43209–43210
Self-Regulatory Organizations; Proposed Rule Changes:
BATS Exchange, Inc., 43217–43219
EDGA Exchange, Inc., 43216–43217
EDGX Exchange, Inc., 43214–43215
International Securities Exchange, LLC, 43211–43214, 43221–43222
NASDAQ OMX BX, Inc., 43210–43211, 43223–43225
NASDAQ OMX PHLX, Inc., 43219–43221

State Department
NOTICES
Culturally Significant Objects Imported for Exhibition Determinations:
Man, Myth, and Sensual Pleasures: Jan Gossart's Renaissance, 43225
The Holocaust—Uniforms, Canisters, and Shoes, 43225
Finding of No Significant Impact:
San Diego–Tijuana Airport Cross Border Facility, 43225–43228
Lifting of Policy of Denial:
Presidential Airways, Inc., 43228–43229

Toxic Substances and Disease Registry Agency
See Agency for Toxic Substances and Disease Registry

Transportation Department
See Federal Aviation Administration
See Federal Highway Administration
See Pipeline and Hazardous Materials Safety Administration

Treasury Department
See Foreign Assets Control Office
See Internal Revenue Service

Separate Parts In This Issue

Part II
Health and Human Services Department, Centers for Medicare & Medicaid Services, 43236–43306

Part III
Consumer Product Safety Commission, 43308–43327

Part IV
Health and Human Services Department, 43330–43364
Labor Department, Employee Benefits Security Administration, 43330–43364
Treasury Department, Internal Revenue Service, 43330–43364

Part V
Agriculture Department, 43366–43393

Reader Aids

Consult the Reader Aids section at the end of this page for phone numbers, online resources, finding aids, reminders, and notice of recently enacted public laws.

To subscribe to the Federal Register Table of Contents LISTSERV electronic mailing list, go to http://listserv.access.gpo.gov and select Online mailing list archives, FEDREGTOC-L, Join or leave the list (or change settings); then follow the instructions.

CFR PARTS AFFECTED IN THIS ISSUE

A cumulative list of the parts affected this month can be found in the Reader Aids section at the end of this issue.

7 CFR
2.....43366
63.....43031
920.....43038
924.....43039
946.....43042
983.....43045

14 CFR
39.....43049

Proposed Rules:
39 (7 documents) 43092, 43095, 43097, 43099, 43101, 43103, 43105

16 CFR

Proposed Rules:
1219.....43308
1220.....43308
1500.....43308
1508 (2 documents) 43107
1509 (2 documents) 43107

18 CFR
38.....43059
40.....43059

26 CFR
54.....43330
602.....43330

Proposed Rules:
54.....43109
300.....43110

29 CFR
2590.....43330

40 CFR
52 (2 documents) 43062, 43066
81.....43069
180 (2 documents) 43072, 43076
300.....43082

Proposed Rules:
52.....43114
81.....43114
300.....43115

41 CFR

Proposed Rules:
60-741.....43116

42 CFR

Proposed Rules:
409.....43236
418.....43236
424.....43236
484.....43236
489.....43236

45 CFR
147.....43330

47 CFR
24.....43088
27.....43088

48 CFR
52.....43090

50 CFR
648.....43090
679.....43090

Proposed Rules:
679.....43118

Rules and Regulations

Federal Register
Vol. 75, No. 141
Friday, July 23, 2010

This section of the FEDERAL REGISTER contains regulatory documents having general applicability and legal effect, most of which are keyed to and codified in the Code of Federal Regulations, which is published under 50 titles pursuant to 44 U.S.C. 1510.

The Code of Federal Regulations is sold by the Superintendent of Documents. Prices of new books are listed in the first FEDERAL REGISTER issue of each week.

DEPARTMENT OF AGRICULTURE

Agricultural Marketing Service

7 CFR Part 63

[Doc. No. AMS–LS–08–0064]

National Sheep Industry Improvement Center

AGENCY: Agricultural Marketing Service, USDA.

ACTION: Interim rule and request for comments.

SUMMARY: This interim rule promulgates rules and regulations establishing a National Sheep Industry Improvement Center (NSIIC) program, consistent with the Food, Conservation, and Energy Act of 2008 (Farm Bill). This rule establishes the NSIIC and a Board of Directors (Board) that will manage and be responsible for the general supervision of the activities of the NSIIC, with oversight from the U.S. Department of Agriculture (USDA). The NSIIC is authorized to use funds to make grants to eligible entities in accordance with a strategic plan. Additionally, this interim rule also announces USDA's Agricultural Marketing Service (AMS) request for approval of a new information collection in accordance with the Paperwork Reduction Act of 1995.

DATES: *Effective Date:* This interim rule is effective September 21, 2010.

Comment Date: Written comments on the regulatory provisions of this interim rule must be received by September 21, 2010. Pursuant to the PRA, comments on the information collection burden must be received by September 21, 2010. Comments will be posted as received, with any personal information provided.

ADDRESSES: Interested persons are invited to submit comments concerning this interim rule. Comments must be posted on *http//www.regulations.gov;* or sent to Kenneth R. Payne, Chief, Marketing Programs Branch, Livestock and Seed Program, AMS, USDA, Room 2628–S, STOP 0251, 1400 Independence Avenue, SW., Washington, DC 20250–0251; via Fax to 202/720–1125; or e-mail to *Kenneth.Payne@ams.usda.gov.*

In addition, comments concerning the information collection and recordkeeping requirement of this rule should be sent to the Desk Officer for Agriculture, Office of Information and Regulatory Affairs, Office of Management and Budget (OMB), New Executive Office Building, 725 17th St., NW., Room 725, Washington, DC 20503. Comments are invited on: (1) Whether the proposed collection of information is necessary for the proper performance of the functions of the agency, including whether the information will have practical utility; (2) the accuracy of the agency's estimate of the burden on the proposed collection of information including the validity of the methodology and assumptions used; (3) ways to enhance the quality, utility, and clarity of the information to be collected; and (4) ways to minimize the burden of the collection of information on those who are to respond, including the use of appropriate automated electronic, mechanical, other technological collection techniques or other forms of information technology.

All comments should reference the document number (AMS–LS–08–0064) and the volume, date, and page number of this issue of the **Federal Register**.

FOR FURTHER INFORMATION CONTACT: Kenneth R. Payne, Chief, Marketing Programs Branch; Telephone 202/720–1115; Fax: 202/720–1125; or e-mail *Kenneth.Payne@ams.usda.gov.*

SUPPLEMENTARY INFORMATION: This interim rule is published pursuant to 7 U.S.C. 2008j as amended by section 11009 of the Food, Conservation, and Energy Act of 2008 (Pub. L. 110–246) and will create a new part 63 in Title 7 of the Code of Federal Regulations for the establishment and function of the NSIIC.

Executive Order 12866

This interim rule has been determined to be not significant for the purposes of Executive Order 12866 and therefore, has not been reviewed by the OMB.

Public Law 104–4

Title II of the Unfunded Mandates Reform Act of 1995 (UMRA) (Pub. L. 104–4) establishes requirements for Federal agencies to assess the effects of their regulatory actions on State and local governments and the private sector. Under section 202 of the UMRA, the AMS generally must prepare a written statement, including a cost-benefit analysis, for proposed and final rules with "Federal mandates" that may result in expenditures by State and local governments, in the aggregate, or by the private sector, of $100 million or more in any one year (2 U.S.C. 1532). When such a statement is needed for a rule, section 205 of the UMRA generally requires Federal agencies to identify and consider a reasonable number of regulatory alternatives and adopt the least costly, most cost-effective, or least burdensome alternative that achieves the objectives of the rule (2 U.S.C. 1535). This rule contains no Federal mandates (under the regulatory provisions of Title II of the UMRA) for State and local governments or the private sector of $100 million or more in any one year. Therefore, this rule is not subject to the requirements of sections 202 and 205 of the UMRA.

Executive Order 12988

This interim rule has been reviewed under Executive Order 12988, Civil Justice Reform. It is not intended to have any retroactive effect. There are no administrative proceedings that must be exhausted before parties may file in court.

Executive Order 13132

This interim rule has been reviewed under Executive Order 13132, Federalism, and has been determined that this rule does not have sufficient Federalism implications to warrant the preparation of a Federalism Assessment. The provisions contained in this rule would not have a substantial direct effect on States or their political subdivisions or on the distribution of power and responsibilities among the various levels of government.

Regulatory Flexibility Act

In accordance with the Regulatory Flexibility Act (RFA) (5 U.S.C. 601–612), the agency is required to examine the impact of regulatory actions on small entities. The purpose of the RFA

is to fit regulatory actions to the scale of businesses subject to such actions so that small businesses will not be disproportionately burdened. AMS certifies that this rule will not have a significant impact on a substantial number of small entities as defined in the RFA.

The purpose of the NSIIC is to: (1) Promote strategic development activities and collaborative efforts by private and State entities to maximize the impact of Federal assistance to strengthen and enhance the production and marketing of sheep or goat products in the United States; (2) Optimize the use of available human capital and resources within the sheep or goat industries; (3) Provide assistance to meet the needs of the sheep or goat industry for infrastructure development, business development, production, resource development, and market and environmental research; (4) Advance activities that empower and build the capacity of the U.S. sheep or goat industry to design unique responses to the special needs of the sheep or goat industries on both a regional and national basis; and (5) Adopt flexible and innovative approaches to solving the long-term needs of the United States sheep or goat industry.

A Board of Directors will manage and be responsible for the general supervision of the structure of the NSIIC, with oversight from USDA. The Board is comprised of seven voting members, of whom four would be active producers of sheep or goats in the United States, two would have expertise in finance and management, and one would have expertise in lamb, wool, goat, or goat product marketing. The Secretary would appoint the voting members from nominations submitted by eligible organizations. There also would be two non-voting members on the Board, the Under Secretary of Agriculture for Rural Development (RD) and the Under Secretary of Agriculture for Research, Education, and Economics.

This rule provides opportunity for public, private, or cooperative organizations; associations, including corporations not operated for profit; federally recognized Indian Tribes; public or quasi-public agencies to be considered eligible entities to submit grant proposals to the Board. According to various sheep and goat association Web sites, there are approximately 215 regional, State, and national sheep and goat organizations located throughout the United States. In addition, according to the Department of the Interior's August 11, 2009, **Federal Register** (74 FR 40218); there are approximately 564 federally recognized American Indian Tribes in the United States.

According to the 2007 Census of Agriculture, there were 83,134 farms with sheep and lamb and 144,466 farms with goats in the United States. Thus, at least approximately 227,600 sheep, lamb and goat producers potentially would be eligible to serve on the four producer positions on the Board of NSIIC. Two positions on the Board are for persons with expertise in finance and management, while one position is for a person with expertise in lamb, wool, goat, or goat product marketing. It is estimated that not more than 10 national organizations would be eligible to nominate the voting members of the Board to the Secretary for appointment.

Most producers would be classified as small businesses under the criteria established by the Small Business Administration (13 CFR 121.201). The members of the national organizations would be expected to reflect this same size. The SBA defines small agricultural service firms as those whose annual receipts are less than $7 million, and small agricultural producers are defined as those having annual receipts of not more than $750,000 annually. With regard to persons who have expertise in finance and management or expertise in lamb, wool, goat, or goat product marketing, and other eligible entities, AMS does not have specific information on the number and size of all such persons or entities and requests comments providing pertinent information or data. Nonetheless, we would estimate that a number of such persons would be considered small entities.

The information collection burden is discussed in the following section.

Paperwork Reduction Act

In accordance with the PRA, this interim rule announces that AMS is requesting review and approval from OMB of a new information collection. AMS has based these estimates on industry research and experience with other boards and advisory committees. The proposed forms are necessary to appoint a Board to effectively carry out the requirements of the enabling legislation—including seating a Board. The nomination process is not expected to have a significant impact on persons affected. The overall impact of the NSIIC program under the Act is expected to be beneficial to sheep and goat industries.

The proposed forms have been carefully reviewed, and every effort has been made to minimize any unnecessary recordkeeping costs or requirements. Such information can be supplied without data processing equipment or outside technical expertise. There are no additional training requirements for individuals filling out reports to the Board. The forms would be simple and easy to understand and place as small a burden as possible on the person required to file the information. In addition, the information to be included on these forms is not available from other sources because such information relates specifically to individual producers or industry members who are nominated to the Board. Therefore, there is no practical method for collecting the required information without the use of these forms.

Title: National Sheep Industry Improvement Center.

OMB Number: 0581–NEW.

Expiration Date of Approval: 3 years from date of OMB approval.

Type of Request: Approval of a new information collection.

Abstract: The primary objective of the NSIIC is to assist U.S. sheep and goat industries by strengthening and enhancing the production and marketing of sheep, goats, and their products in the United States. The information collection requirements in the request are essential to carry out the intent of the enabling legislation.

AMS will accept nominations for membership on the Board from national organizations that (1) consist primarily of active sheep or goat producers in the United States and (2) have the primary interest of sheep or goat production in the United States. A nomination for appointment form would be submitted by such national organizations (who may submit more than one nominee) while a background information form and nominee's agreement to serve form would be submitted by each producer or industry member nominated to serve on the Board.

Estimate of Burden: The public reporting and recordkeeping burden for this collection of information is estimated to total 40 hours the first year and 16 hours each year after. We will submit a justification for change to report new burden hours added to form AD–755.

(1) Nominations for Appointments Form

Estimate of Burden: Public reporting burden for this collection of information is estimated to average 0.5 hour per response.

Respondents: National organizations submitting nominations to the Board who (1) consist primarily of active sheep or goat producers in the United States and (2) have the primary interest of sheep or goat production in the United States.

Estimated number of Respondents: 10.

Estimated number of Responses per Respondent: 1 per year.

Estimated Total Annual Burden: 5 hours.

(2) Background Information Form (OMB Form No. 0505–0001)

Estimate of Burden: Public reporting for this collection of information is estimated to average 0.5 hour per response for each producer or industry member nominated to serve on the Board.

Respondents: Sheep or goat producers; Persons with expertise in finance and management; and Persons with expertise in lamb, wool, goat, or goat marketing.

Estimated number of Respondents: (56 for initial nominations to the NSIIC Board, about 18 in the second year, about 18 in the third year).

Estimated number of Responses per Respondent: 1.

Estimated Total Annual Burden on Respondents: 28 hours for the initial nominations to the NSIIC Board and approximately 9 hours annually thereafter.

(3) Nominee's Agreement To Serve

Estimate of Burden: Public reporting for this collection of information is estimated to average .125 hours per response for each producer or industry member nominated to serve on the Board.

Respondents: Sheep or goat producers; Persons with expertise in finance and management; and Persons with expertise in lamb, wool, goat, or goat marketing.

Estimated Number of Respondents: (56 for initial nominations to the NSIIC Board, about 18 in the second year, about 18 in the third year).

Estimated Number of Responses per Respondent: 1.

Estimated Total Annual Burden on Respondents: 7 hours for the initial nominations to the NSIIC Board and approximately 2.25 (rounded down to 2) hours annually thereafter.

Comments are invited on: (1) Whether the new collection of information is necessary for the proper performance of the functions of the NSIIC, including whether the information will have practical utility; (2) the accuracy of the agency's estimate of the burden of the new collection of information including the validity of the methodology and assumptions used; (3) ways to enhance the quality, utility, and clarity of the information to be collected; and (4) ways to minimize the burden of the collection of information on those who are to respond, including the use of appropriate automated, electronic, mechanical, or other technological collection techniques or other forms of information technology.

Background Information

The NSIIC was initially authorized under the Consolidated Farm and Rural Development Act (Act). The Act, as amended, was passed as part of the 1996 Farm Bill (Pub. L. 104–127). The initial legislation included a provision that privatized the NSIIC 10 years after its ratification or once the full appropriation of $50 million was disbursed. Subsequently, the NSIIC was privatized on September 30, 2006 (72 FR 28945).

In 2008, the NSIIC was re-established under Title XI of the Food, Conservation, and Energy Act of 2008 (Pub. L. 110–246), also known as the 2008 Farm Bill. Section 11009 of the 2008 Farm Bill repealed the requirement in section 375(e)(6) of the Act to privatize the NSIIC. Additionally, the 2008 Farm Bill provided for $1,000,000 in mandatory funding for fiscal year 2008 from the Commodity Credit Corporation for the NSIIC to remain available until expended, as well as authorization for appropriations in the amount of $10 million for each of fiscal years 2008 through 2012.

The authorizing legislation established in the United States Department of the Treasury (Treasury) the NIISC Revolving Fund (Fund). The Fund is to be available to the NSIIC, without fiscal year limitation, to carry out the authorized programs and activities of the NSIIC. The law provides authority for amounts in the Fund to be used for direct loans, loan guarantees, cooperative agreements, equity interests, investments, repayable grants, and grants to eligible entities, either directly or through an intermediary, in accordance with a strategic plan submitted by the NSIIC to the Secretary. This rulemaking will establish the NSIIC and use of the Fund for making only grants to eligible entities.

The purpose of the NSIIC is to: (1) Promote strategic development activities and collaborative efforts by private and State entities to maximize the impact of Federal assistance to strengthen and enhance production and marketing of sheep or goat products in the United States; (2) Optimize the use of available human capital and resources within the sheep or goat industries; (3) Provide assistance to meet the needs of the sheep or goat industry for infrastructure development, business development, production, resource development, and market and environmental research; (4) Advance activities that empower and build the capacity of the U.S. sheep or goat industry to design unique responses to the special needs of the sheep or goat industries on both a regional and national basis; and (5) Adopt flexible and innovative approaches to solving the long-term needs of the United States sheep or goat industry.

The management of the NSIIC is vested in a Board that is appointed by the Secretary. The Secretary reviews and monitors compliance of the Board as provided under the Act and rules and regulations. The Board is composed of seven voting members, of whom four would be active producers of sheep or goats in the United States, two would have expertise in finance and management, and one would have expertise in lamb, wool, goat, or goat product marketing. The Board would also include two non-voting members, the Under Secretary of Agriculture for Rural Development (RD) and the Under Secretary of Agriculture for Research, Education, and Economics. The Secretary would appoint the voting members from nominations submitted by eligible organizations. A member's term of office shall be 3 years with a maximum of two terms. Board members shall initially serve staggered terms of 1, 2, or 3 years, as determined by the Secretary. Only national organizations that (1) consist primarily of active sheep or goat producers in the United States and (2) have the primary interest of sheep or goat production in the United States can make nominations to the Board. USDA will announce in a nationwide press release that USDA is accepting nominations from the aforementioned national organizations.

The Board will meet not less than once each fiscal year. Board members will not receive compensation for serving on the Board, but will be reimbursed for travel, subsistence, and other necessary expenses. The Board shall be responsible for general supervision of the NSIIC; review of any contract and grant to be made or entered into by the NSIIC and any financial assistance provided to the NSIIC; making final decision—by majority vote—on whether or not to provide grants to an eligible entity; and developing and establishing a budget plan and long-term operating plan to carry out the goals of the NSIIC.

The authorizing legislation establishes in the Treasury, the NSIIC Fund. The Fund is to be available to the NSIIC, without fiscal year limitation, to carry out the authorized programs and activities of the NSIIC. The law provides authority for amounts in the Fund to be

used to carry out authorized program activities of the NSIIC.

This interim rule authorizes a grant only program to be administered by the NSIIC Board. Based on funding, the Board will periodically announce that proposals may be submitted to the Board for consideration from eligible entities. The Board would determine how funds would be allocated. Proposals submitted to the Board must be consistent with the purpose of the NSIIC, which are to: (1) Promote strategic development activities and collaborative efforts by private and State entities to maximize the impact of Federal assistance to strengthen and enhance the production and marketing of sheep or goat products in the United States; (2) Optimize the use of available human capital and resources within the sheep or goat industries; (3) Provide assistance to meet the needs of the sheep or goat industry for infrastructure development, business development, production, resource development, and market and environmental research; (4) Advance activities that empower and build the capacity of the U.S. sheep or goat industry to design unique responses to the special needs of the sheep or goat industries on both a regional and national basis; and (5) Adopt flexible and innovative approaches to solving the long-term needs of the United States sheep or goat industry.

Discussion of Interim Regulatory Text

Sections 63.1 through 63.13 define certain terms pertinent to nomination processes for establishment of a NSIIC Board.

Sections 63.100 through 63.112 include provisions relating to the Board. These provisions cover establishment and membership, certification of organizations, the nomination process, powers and duties of the Board and other pertinent information related to Board function and operation.

Section 63.200 details the establishment and purpose of the NSIIC.

Sections 63.300 through 63.301 detail the establishment and use of the Fund. Specifically, these sections detail the purposes for which the Board shall expend funds and how the Fund shall be managed. This interim rule permits the making of contracts and grants only.

Sections 63.400 through 63.402 pertain to the books and records of the Board and the NSIIC, which the Secretary has access to and outlines the responsibilities for confidentiality.

Sections 63.500 through 63.505 contain miscellaneous provisions necessary for the function of the NSIIC and the oversight of USDA.

Pursuant to 5 U.S.C. 553, it is found and determined upon good cause that it is impracticable and contrary to the public interest to give preliminary notice prior to putting this rule into effect in order to establish the Board and the NSIIC program at the earliest possible date consistent with the 2008 Farm Bill.

List of Subjects in 7 CFR Part 63

Administrative practice and procedure, Advertising, Consumer Information, Goat and goat products, Lamb and lamb products, Marketing agreements, Reporting and recordkeeping requirements.

■ For the reasons set forth in the preamble, chapter I of Title 7 is amended by adding part 63 to read as follows:

PART 63—NATIONAL SHEEP INDUSTRY IMPROVEMENT CENTER

Subpart A–General Provisions

Definitions

Sec.
63.1 Act.
63.2 Board.
63.3 Department or USDA.
63.4 Eligible entity.
63.5 Eligible organization.
63.6 Fiscal year.
63.7 Fund.
63.8 NSIIC.
63.9 Part.
63.10 Secretary.
63.11 Under Secretary for Rural Development.
63.12 Under Secretary for Research, Education, and Economics.
63.13 United States.

Board of Directors

63.100 Establishment and membership.
63.101 Nominations.
63.102 Nominee's agreement to serve.
63.103 Appointment.
63.104 Vacancies.
63.105 Nominating organizations.
63.106 Term of office.
63.107 Compensation.
63.108 Removal.
63.109 Procedure.
63.110 Powers and duties of the Board.
63.111 Prohibited activities.
63.112 Conflict of interest.

National Sheep Industry Improvement Center

63.200 NSIIC Establishment and purpose.

Revolving Fund

63.300 Establishment.
63.301 Use of fund.

Reports, Books, and Records

63.400 Books and records.
63.401 Use of information.
63.402 Confidentiality.

Miscellaneous

63.500 Compliance.
63.501 Patents, copyrights, inventions, trademarks, information, publications, and product formulations.
63.502 Personal liability.
63.503 Separability.
63.504 Amendments.
63.505 OMB control number.

Subpart B [Reserved]

Authority: 7 U.S.C. 2008j.

Subpart A–General Provisions

Definitions

§ 63.1 Act.

Act means section 375 of the Consolidated Farm and Rural Development Act, 7 U.S.C. 2008j, as amended by section 11009 of the Food, Conservation, and Energy Act of 2008 (Pub. L. 110–246).

§ 63.2 Board.

Board means National Sheep Industry Improvement Center Board of Directors established under § 63.100.

§ 63.3 Department or USDA.

Department or *USDA* means the United States Department of Agriculture.

§ 63.4 Eligible entity.

Eligible entity means an entity that promotes the betterment of the United States sheep or goat industries and that is a public, private, or cooperative organization; an association, including a corporation not operated for profit; a federally recognized Indian Tribe; or a public or quasi-public agency.

§ 63.5 Eligible organization.

Eligible organization means any national organization that meets the criteria provided for in § 63.105 as being eligible to submit nominations for membership on the Board.

§ 63.6 Fiscal year.

Fiscal year means a calendar year or any other 12 month period as determined by the Board.

§ 63.7 Fund.

Fund means the NSIIC Revolving Fund established in the United States Department of the Treasury that is available to the NSIIC without fiscal year limitation, to carry out the programs and activities authorized under the Act.

§ 63.8 NSIIC.

NSIIC or *Center* means the National Sheep Industry Improvement Center established under § 63.200.

§ 63.9 Part.

Part means the rules and regulations issued pursuant to the Act that appear

in part 63 of Title 7 of the Code of Federal Regulations.

§ 63.10 Secretary.

Secretary means the Secretary of Agriculture of the United States or any other officer or employee of the Department to whom authority has heretofore been delegated, or to whom authority may hereafter be delegated, to act in the Secretary's stead.

§ 63.11 Under Secretary for Rural Development.

Under Secretary for Rural Development means the Under Secretary for Rural Development of the U.S. Department of Agriculture, or any other officer or employee of the Department designated by the Under Secretary to act in the Under Secretary's stead.

§ 63.12 Under Secretary for Research, Education, and Economics.

Under Secretary for Research, Education, and Economics means the Under Secretary for Research, Education, and Economics of the U.S. Department of Agriculture, or any other officer or employee of the Department designated by the Under Secretary to act in the Under Secretary's stead.

§ 63.13 United States.

United States means collectively the 50 States, the District of Columbia, the Commonwealth of Puerto Rico, and the territories and possessions of the United States.

Board of Directors

§ 63.100 Establishment and membership.

There is hereby established a National Sheep Industry Improvement Center Board. The Board is composed of seven voting members and two non-voting members. Voting members of the Board shall be appointed by the Secretary from nominations submitted in accordance with this part. The Board shall consist of the following:

(a) Voting Members.

(1) Four members shall be active producers of sheep or goats in the United States;

(2) Two members shall have expertise in finance and management; and

(3) One member shall have expertise in lamb, wool, goat, or goat product marketing.

(b) Non-Voting Members.

(1) One member shall be the Under Secretary of Agriculture for Rural Development, USDA; and

(2) One member shall be the Under Secretary for Research, Education, and Economics, USDA.

§ 63.101 Nominations.

All nominations authorized under this section shall be made in the following manner:

(a) Nominations shall be obtained by the Secretary from national organizations eligible under § 63.105. An eligible organization shall submit to the Secretary for consideration at least two nominations for one or more voting member seats on the Board. If two nominations for each voting member seat are not submitted by such organization(s), then the Secretary may solicit nominations from other sources.

(b) After the establishment of the initial Board, USDA shall announce when a vacancy does or will exist. Nomination for subsequent Board members shall be submitted to the Secretary not less than sixty (60) days prior to the expiration of the terms of the members whose terms are expiring, in the manner as described in this section. In the case of vacancies due to reasons other than the expiration of a term of office, successor Board members shall be appointed pursuant to § 63.104.

(c) If more than one eligible organization exists, they may caucus and jointly nominate at least two qualified persons for each position. If joint agreement is not reached with respect to any such nominations, or if no caucus is held, each eligible organization may submit to the Secretary at least two nominees for each appointment to be made.

§ 63.102 Nominee's agreement to serve.

Any person nominated to serve on the Board shall file with the Secretary at the time of the nomination a written agreement to:

(a) Serve on the Board if appointed;

(b) Disclose any relationship that may create a conflict of interest under § 63.112; and

(c) Withdraw from participation in deliberations, decision-making, or voting on matters which concern any relationship disclosed under paragraph (b) of this section.

§ 63.103 Appointment.

From the nominations made pursuant to § 63.101, the Secretary shall appoint the members of the Board.

§ 63.104 Vacancies.

To fill any vacancy occasioned by the death, removal, resignation, or disqualification of any member of the Board, the Secretary shall appoint a successor from the most recent list of nominations for the position or the Secretary shall request nominations for a successor pursuant to § 63.101 and such successor shall be appointed pursuant to § 63.103.

§ 63.105 Nominating organizations.

(a) *In general.* Nominations for voting members of the Board may be submitted by any national organization that the Secretary determines meets the eligibility criteria established under paragraph (b) of this section.

(b) *Basis for eligibility.* A national organization is eligible to submit nominations for voting members on the Board if:

(1) The membership of the organization consists primarily of active sheep or goat producers in the United States; and

(2) The primary interest of the organization is the production of sheep or goats in the United States.

§ 63.106 Term of office.

(a) The voting members of the Board shall serve for a term of three years; except that persons (other than the chairperson) appointed to the initial Board shall serve staggered terms of one, two, and three years, as determined by the Secretary.

(b) No member may serve more than two consecutive full terms.

§ 63.107 Compensation.

Board members shall serve without compensation, but shall be reimbursed for their reasonable travel, subsistence, and other necessary expenses incurred in performing their duties as members of the Board.

§ 63.108 Removal.

If the Secretary determines that any person appointed under this part fails or refuses to perform his or her duties properly or engages in acts of dishonesty or willful misconduct, the Secretary shall remove the person from office. A person appointed under this part or any employee of the Board may be removed by the Secretary if the Secretary determines that the person's continued service would be detrimental to the purposes of the Act.

§ 63.109 Procedure.

(a) At a Board meeting, it will be considered a quorum when a simple majority of the voting representatives are present.

(b) A decision of the Board shall be made by a majority of the voting members of the board.

(c) The Board shall meet not less than once each fiscal year at the call of the chairperson or at the request of the executive director.

(d) The location of the meeting shall be established by the Board.

(e) A chairperson shall be selected from among the voting members of the Board and all serve a term of office of two years.

(f) All Board members and the Secretary will be notified at least 30 days in advance of all Board meetings, unless an emergency meeting is declared.

(g) In lieu of voting at a properly convened meeting and, when in the opinion of the chairperson of the Board such action is necessary, the Board may take action if supported by a simple majority of the Board representatives by mail, telephone, electronic mail, facsimile, or any other means of communication. In that event, all representatives must be notified and provided the opportunity to vote. Any action so taken shall have the same force and effect as though such action had been taken at a properly convened meeting of the Board. All telephone votes shall be confirmed promptly in writing. All votes shall be recorded in Board minutes.

(h) There shall be no voting by proxy.

(i) The organization of the Board and the procedures for conducting meetings of the Board shall be in accordance with its bylaws, which shall be established by the Board and approved by the Secretary.

§ 63.110 Powers and duties of the Board.

The management of the NSIIC shall be vested in the Board of Directors. The Board shall have the following powers and duties:

(a) Be responsible for the general supervision of the NSIIC;

(b) Review any grant or contract agreement to be made or entered into by the NSIIC and any financial assistance provided to the NSIIC;

(c) Make the final decision, by majority vote, on whether or not to provide grants to an eligible entity in accordance with the strategic plan;

(d) Develop and establish a budget plan and long-term operating plan to carry out the goals of the NSIIC;

(e) Adopt, and amend as appropriate, bylaws as necessary for the proper management and functioning of the NSIIC;

(f) Provide a system of organization to fix responsibility and promote efficiency in carrying out the functions of the NSIIC;

(g) Appoint and establish compensation for an executive director, who will serve at the pleasure of the Board, to be the chief executive officer of the NSIIC;

(h) Appoint other officers, attorneys, employees, and agents as necessary and set forth their respective duties and powers;

(i) Delegate, by resolution, to the chairperson, the executive director, or any other officer or employee any function, power, or duty of the Board—other than voting on a grant, contract, agreement, budget, or annual strategic plan; and

(j) Consult with the following entities to carry out this part:

(1) State departments of agriculture;

(2) Federal departments and agencies;

(3) Nonprofit development corporations;

(4) Colleges and universities;

(5) Banking and other credit-related agencies;

(6) Agriculture and agribusiness organizations, and

(7) Regional planning and development organizations.

§ 63.111 Prohibited activities.

The Board may not engage in, and shall prohibit the employees and agents of the Board from engaging in:

(a) Any action that is a conflict of interest under § 63.112;

(b) Using funds to undertake any action for the purpose of influencing legislation or governmental action or policy, by local, State, national, and foreign governments, other than recommending to the Secretary amendments to the Order; and

(c) Any activity that is false, misleading, or disparaging to another agricultural commodity.

§ 63.112 Conflict of interest.

(a) *In general.* Members of the Board shall not vote on any particular matter pending before the Board in which, to the knowledge of the member, an interest is held by the member, any spouse of the member, any child of the member, any partner of the member, any organization in which the member is serving as an officer, director, trustee, partner, or employee; or any person with whom the member is negotiating or has any arrangement concerning prospective employment or with whom the member has a financial interest, except as provided in paragraph (c) of this section.

(b) *Validity of action.* An action by a member of the Board that violates § 63.112 (a) shall not impair or otherwise affect the validity of any otherwise lawful action by the Board.

(c) *Disclosure.* If a member of the Board makes full disclosure of an interest and, prior to any participation by the member, the Board determines, by majority vote, that the interest is too remote or too inconsequential to affect the integrity of any participation by the member, the member may participate in the matter relating to the interest, except as provided in paragraph (d) of this section. A member that discloses an interest under section § 63.112(a) shall not vote on a determination of whether the member may participate in the matter relating to the interest.

(d) *Remands.* The Secretary may vacate and remand to the Board for reconsideration any decision made if the Secretary determines that there has been a violation of this section or any conflict of interest provision of the bylaws of the Board with respect to the decision.

(1) In the case of any violation and remand of a funding decision to the Board, the Secretary shall inform the Board of the reasons for the remand.

(2) If a decision with respect to the matter is remanded to the Board by reason of a conflict of interest faced by a Board member, the member may not participate in any subsequent decision with respect to the matter.

National Sheep Industry Improvement Center

§ 63.200 NSIIC Establishment and purpose.

(a) There is hereby established a National Sheep Industry Improvement Center. The purpose of the Center shall be to:

(1) Promote strategic development activities and collaborative efforts by private and State entities to maximize the impact of Federal assistance to strengthen and enhance production and marketing of sheep or goat products in the United States;

(2) Optimize the use of available human capital and resources within the sheep or goat industries;

(3) Provide assistance to meet the needs of the sheep or goat industry for infrastructure development, business development, production, resource development, and market and environmental research;

(4) Advance activities that empower and build the capacity of the U.S. sheep or goat industry to design unique responses to the special needs of the sheep or goat industries on both a regional and national basis; and

(5) Adopt flexible and innovative approaches to solving the long-term needs of the United States sheep and goat industry.

(b) The NSIIC shall submit to the Secretary an annual strategic plan for the delivery of financial assistance provided by the NSIIC. A strategic plan shall identify:

(1) Goals, methods, and a benchmark for measuring the success of carrying out the plan and how the plan relates to the national and regional goals of the NSIIC;

(2) The amount and sources of Federal and non-Federal funds that are available for carrying out the plan;

(3) Funding priorities;
(4) Selection criteria for funding; and
(5) A method of distributing funding.

Revolving Fund

§ 63.300 Establishment.

The NSIIC Revolving Fund established in the Treasury shall be available to the NSIIC, without fiscal year limitation, to carry out the authorized programs and activities of the NSIIC under this part. There shall be deposited in the Fund:

(a) Such amounts as may be appropriated, transferred, or otherwise made available to support programs and activities of the NSIIC;

(b) Payments received from any source for products, services, or property furnished in connection with the activities of the NSIIC;

(c) Fees and royalties collected by the NSIIC from licensing or other arrangements relating to commercialization of products developed through projects funded, in whole or part, by grants or contracts executed by the NSIIC;

(d) Donations or contributions accepted by the NSIIC to support authorized programs and activities. Such contributions shall be free from any encumbrance by the donor and the NSIIC shall retain complete control of their use; and

(e) Any other funds acquired by the NSIIC.

§ 63.301 Use of fund.

The NSIIC shall use the Fund to:

(a) Make grants to eligible entities in accordance with a strategic plan submitted under § 63.310 of this part. Specifically, amounts in the Fund may be used to:

(1) Participate with Federal and State agencies in financing activities that are in accordance with the strategic plan, including participation with several States in a regional effort;

(2) Participate with other public and private funding sources in financing activities that are in accordance with the strategic plan, including participation in a regional effort;

(3) Accrue interest;

(4) Serve broad geographic areas and regions of diverse production, to the maximum extent practicable;

(5) Only to supplement and not supplant Federal, State, and private funds expended for rural development;

(6) For administration purposes, with a maximum 3 percent of the NSIIC Fund balance at the beginning of each fiscal year for the administration of the NSIIC; and

(b) Provide funds to eligible entities contingent upon that entity agreeing to account for the amounts using generally accepted accounting principles and to provide access to the Secretary for inspection and audit of such records.

Reports, Books, and Records

§ 63.400 Books and records.

The Board and NSIIC shall:

(a) Maintain such books and records, which shall be made available to the Secretary for inspection and audit as is appropriate for the administration or enforcement of the Act or rules and regulations issued thereunder;

(b) Prepare and submit to the Secretary, from time to time, such reports as the Secretary may prescribe; and

(c) Account for the receipt and disbursement of all funds entrusted to it. The NSIIC shall cause its books and records to be audited by an independent auditor at the end of each fiscal year, and a report of such audit to be submitted to the Secretary.

§ 63.401 Use of information.

Information from records or reports required pursuant to this part shall be made available to the Secretary as is appropriate for the administration or enforcement of the Act or rules and regulation issued thereunder.

§ 63.402 Confidentiality.

All information obtained from books, records, reports, or any other material obtained under the Act and this part, shall be kept confidential by all persons, including employees and former employees of the NSIIC. Nothing in this section shall be deemed to prohibit the issuance of general statements based upon the reports or the statistical data, which statements do not identify the information furnished by any entity.

Miscellaneous

§ 63.500 Compliance.

The Secretary shall review and monitor compliance by the Board and the NSIIC with the Act and this part.

§ 63.501 Patents, copyrights, inventions, trademarks, information, publications, and product formulations.

Any patents, copyrights, inventions, trademarks, information, publications, or product formulations developed through the use of funds collected by the Board under the provisions of this subpart shall be the property of the U.S. Government, as represented by the Board, and shall, along with any rents, royalties, residual payments, or other income from the rental, sales, leasing, franchising, or other uses of such patents, copyrights, inventions, trademarks, information, publications, or product formulations, inure to the benefit of the Board; shall be considered income subject to the same fiscal, budget, and audit controls as other funds of the Board; and may be licensed subject to approval by the Secretary. Should patents, copyrights, inventions, trademarks, information, publications, or product formulations be developed through the use of funds collected by the Board under this part and funds contributed by another organization or person, ownership and related rights to such patents, copyrights, inventions, trademarks, information, publications, or product formulations shall be determined by agreement between the Board and the party contributing funds towards the development of such patents, copyrights, inventions, trademarks, information, publications, or product formulations in a manner consistent with this paragraph.

§ 63.502 Personal liability.

No member or employee of the Board shall be held personally responsible, either individually or jointly, in any way whatsoever to any person for errors in judgment, mistakes, or other acts, either of commission or omission, as such member or employee, except for acts of dishonesty or willful misconduct.

§ 63.503 Separability.

If any provision of the part is declared invalid or the applicability thereof to any person or circumstance is held invalid, the validity of the remainder of this subpart, or the applicability thereof to other persons or circumstances shall not be affected thereby.

§ 63.504 Amendments.

Amendments to this part may be proposed, from time to time, by the Board or by any interested persons affected by the provisions of the Act, including the Secretary.

§ 63.505 OMB control number.

The control number assigned to the information collection requirements of this part by the Office of Management and Budget pursuant to the Paperwork Reduction Act of 1995, 44 U.S.C. Chapter 35, is OMB control number 0505–new.

Subpart B [Reserved]

Dated: July 19, 2010.

Rayne Pegg,

Administrator, Agricultural Marketing Service.

[FR Doc. 2010–18096 Filed 7–22–10; 8:45 am]

BILLING CODE 3410–02–P

DEPARTMENT OF AGRICULTURE

Agricultural Marketing Service

7 CFR Part 920

[Doc. No. AMS–FV–08–0085; FV08–920–3 IR]

Kiwifruit Grown in California; Changes to District Boundaries

AGENCY: Agricultural Marketing Service, USDA.

ACTION: Interim rule with request for comments.

SUMMARY: This rule removes the grower district boundaries contained in the administrative rules and regulations of the kiwifruit marketing orders (order). The order regulates the handling of kiwifruit grown in California and is administered locally by the Kiwifruit Administrative Committee (committee). This rule makes necessary changes to the order's administrative rules and regulations to make them consistent with the recently amended order.

DATES: Effective August 1, 2010; comments received by September 21, 2010 will be considered prior to issuance of a final rule.

ADDRESSES: Interested persons are invited to submit written comments concerning this rule. Comments must be sent to the Docket Clerk, Marketing Order Administration Branch, Fruit and Vegetable Programs, AMS, USDA, 1400 Independence Avenue, SW., STOP 0237, Washington, DC 20250–0237; Fax: (202) 720–8938, or Internet: *http://www.regulations.gov.* All comments should reference the document number and the date and page number of this issue of the **Federal Register** and will be made available for public inspection at the Office of the Docket Clerk during regular business hours, or can be viewed at: *http://www.regulations.gov.* All comments submitted in response to this rule will be included in the record and will be made available to the public. Please be advised that the identity of the individuals or entities submitting the comments will be made public on the Internet at the address provided above.

FOR FURTHER INFORMATION CONTACT: Laurel May or Kathleen M. Finn, Marketing Order Administration Branch, Fruit and Vegetable Programs, AMS, USDA; Telephone: (202) 720–2491, Fax: (202) 720–8938; or E-mail: *Laurel.May@ams.usda.gov* or *Kathy.Finn@ams.usda.gov.*

Small businesses may request information on complying with this regulation by contacting Antoinette Carter, Marketing Order Administration Branch, Fruit and Vegetable Programs, AMS, USDA, 1400 Independence Avenue, SW., STOP 0237, Washington, DC 20250–0237; Telephone: (202) 720–2491, Fax: (202) 720–8938, or E-mail: *Antoinette.Carter@ams.usda.gov.*

SUPPLEMENTARY INFORMATION: This rule is issued under Marketing Order No. 920, as amended (7 CFR part 920), regulating the handling of kiwifruit grown in California, hereinafter referred to as the "order." The order is effective under the Agricultural Marketing Agreement Act of 1937, as amended (7 U.S.C. 601–674), hereinafter referred to as the "Act."

The Department of Agriculture (USDA) is issuing this rule in conformance with Executive Order 12866.

This rule has been reviewed under Executive Order 12988, Civil Justice Reform. This rule is not intended to have retroactive effect.

The Act provides that administrative proceedings must be exhausted before parties may file suit in court. Under section 608c(15)(A) of the Act, any handler subject to an order may file with USDA a petition stating that the order, any provision of the order, or any obligation imposed in connection with the order is not in accordance with law and request a modification of the order or to be exempted therefrom. A handler is afforded the opportunity for a hearing on the petition. After the hearing, USDA would rule on the petition. The Act provides that the district court of the United States in any district in which the handler is an inhabitant, or has his or her principal place of business, has jurisdiction to review USDA's ruling on the petition, provided an action is filed not later than 20 days after the date of the entry of the ruling.

This rule revises the administrative rules and regulations contained in the order. The change will bring the regulations into conformance with recent amendments to the order removing language that is inconsistent with the amended order. The amendments and this change to the order's administrative rules and regulations were recommended by the committee and were submitted to USDA on August 15, 2008.

Section 920.12 of the order defines the boundaries of the grower districts into which the production area is divided. Section 920.31(l) authorizes the committee to redefine the district boundaries, with the approval of the Secretary, as appropriate to reflect shifts of kiwifruit production within the production area. Section 920.131 was added to the order's rules and regulations in 1995 (60 FR 7432; February 8, 1995) to specify updated district boundaries that reflected industry production trends at that time.

California kiwifruit growers recently voted to amend the order by redefining the districts into which the production area is divided. Section § 920.12, which previously provided for eight grower districts, will be amended effective August 1, 2010 (75 FR 37288; June 29, 2010). The amendment to § 920.12 provides that the California production area will be divided into three grower districts: District 1, to include Butte, Sutter, and Yuba Counties; District 2, to include Tulare County; and District 3, to include all other California counties not included in Districts 1 and 2. At that time, § 920.131, which specifies the boundaries for eight grower districts, will be inconsistent with the amended § 920.12. For this reason, this rule removes § 920.131 from the order's rules and regulations, effective August 1, 2010.

Initial Regulatory Flexibility Analysis

Pursuant to requirements set forth in the Regulatory Flexibility Act (RFA) (5 U.S.C. 601–612), the Agricultural Marketing Service (AMS) has considered the economic impact of this action on small entities. Accordingly, AMS has prepared this initial regulatory flexibility analysis.

The purpose of the RFA is to fit regulatory actions to the scale of business subject to such actions so that small businesses will not be unduly or disproportionately burdened. Marketing orders issued pursuant to the Act, and rules issued thereunder, are unique in that they are brought about through group action of essentially small entities acting on their own behalf.

Small agricultural service firms, which include handlers regulated under the order, have been defined by the Small Business Administration (SBA) (13 CFR 121.201) as those having annual receipts of less than $7,000,000. Small agricultural growers have been defined as those with annual receipts of less than $750,000.

There are approximately 30 handlers of kiwifruit subject to regulation under the order and approximately 220 growers of kiwifruit in the regulated area. Information provided by the committee indicates that the majority of California kiwifruit handlers and growers would be considered small entities according to the SBA's definition.

The order regulates the handling of kiwifruit grown in the state of California. At the time the order was promulgated, kiwifruit acreage was

more widespread throughout California and there were many more growers involved in kiwifruit production. The order originally provided for eight grower districts within the production area, with one membership seat apportioned to each district, and an additional seat reallocated annually to each of the three districts with the highest production in the preceding year. The structure was designed to afford equitable representation for all districts on the committee.

Planted acreage has been gradually concentrated into two main regions in recent years. That, and the decline in the number of growers over time, prompted consolidation of the districts and reallocation of grower member seats through the formal rulemaking process. Under the amended order, the production area will be divided into three grower districts, and committee membership will be allocated proportionately among the districts based upon the previous five years' average production for each district. These changes are expected to better reflect the current composition of the industry.

This rule removes § 920.131 from the order's administrative rules and regulations, effective August 1, 2010. The section specifies the boundaries for eight grower districts. As such, it will be inconsistent with the amended § 920.12, which provides the boundaries for three grower districts.

The changes in this interim rule are necessary to conform with amendments to the order, which will become effective on August 1, 2010. No alternatives to this action are deemed appropriate.

Regarding the impact of this action on the affected entities, both large and small entities are expected to benefit from the change. The revision in this interim rule provides consistency between the amended marketing order and its administrative rules and regulations. The order amendment is expected to ensure that the interests of all large and small entities are represented appropriately during committee deliberations.

Committee meetings in which regulatory recommendations and other decisions are made are open to the public. All members are able to participate in committee deliberations, and each committee member has an equal vote. Others in attendance at meetings are also allowed to express their views.

At committee meetings held on January 30, 2008, April 22, 2008, and July 9, 2008, the committee voted unanimously to recommend amending the order by revising the grower districts into which the production area is divided. The committee's recommendations were submitted to AMS on August 15, 2008. Growers approved the amendment to redefine district boundaries in a referendum held in March 2010. The amendment will become effective August 1, 2010.

This rule will not impose any additional reporting or recordkeeping requirements on large or small kiwifruit handlers. As with all Federal marketing order programs, reports and forms are periodically reviewed to reduce information requirements and duplication by industry and public sector agencies.

AMS is committed to complying with the E–Government Act, to promote the use of the Internet and other information technologies to provide increased opportunities for citizen access to Government information and services, and for other purposes.

Finally, interested persons are invited to submit comments on this interim rule, including the regulatory and informational impacts of this action on small businesses.

A small business guide on complying with fruit, vegetable, and specialty crop marketing agreements and orders may be viewed at the following Web site: *http://www.ams.usda.gov/AMSv1.0/ams.fetchTemplateData.do?template=TemplateN&page=MarketingOrdersSmallBusinessGuide.* Any questions about the compliance guide should be sent to Antoinette Carter at the previously mentioned address in the **FOR FURTHER INFORMATION CONTACT** section.

This rule invites comments on changes to the administrative rules and regulations currently prescribed under the marketing order for California kiwifruit. Any comments received will be considered prior to finalization of this rule.

After consideration of all relevant material presented, including the committee's recommendations and other information, it is found that this interim rule, as hereinafter set forth, will tend to effectuate the declared policy of the Act.

Pursuant to 5 U.S.C. 553, it is also found and determined upon good cause that it is impracticable, unnecessary, and contrary to the public interest to give preliminary notice prior to putting this rule into effect, and that good cause exists for effectuating this rule on August 1, 2010, because: (1) August 1, 2010 is the beginning of the fiscal period and amendments to the order's district boundary provision will become effective on that date; (2) this action is necessary to make the order's administrative rules and regulations consistent with the amended order; and (3) this rule provides a 60-day comment period, and any written comments received will be considered prior to any finalization of this rule.

List of Subjects in 7 CFR Part 920

Kiwifruit, Marketing agreements, Reporting and recordkeeping requirements.

■ For the reasons set forth in the preamble, 7 CFR part 920 is amended as follows:

PART 920—KIWIFRUIT GROWN IN CALIFORNIA

■ 1. The authority citation for 7 CFR part 920 continues to read as follows:

Authority: 7 U.S.C. 601–674.

§ 920.131 [Removed]

■ 2. Section 920.131 is removed.

Dated: July 20, 2010.

Rayne Pegg,

Administrator, Agricultural Marketing Service.

[FR Doc. 2010–18087 Filed 7–22–10; 8:45 am]

BILLING CODE 3410–02–P

DEPARTMENT OF AGRICULTURE

Agricultural Marketing Service

7 CFR Part 924

[Doc. No. AMS–FV–10–0054; FV10–924–2 IR]

Fresh Prunes Grown in Designated Counties in Washington and in Umatilla County, OR; Suspension of Reporting and Assessment Requirements

AGENCY: Agricultural Marketing Service, USDA.

ACTION: Interim rule with request for comments.

SUMMARY: This rule suspends the reporting and assessment requirements prescribed under the Washington-Oregon fresh prune marketing order. The marketing order regulates the handling of fresh prunes grown in designated counties in Washington and in Umatilla County, Oregon, and is administered locally by the Washington-Oregon Fresh Prune Marketing Committee (Committee). On June 1, 2010, the Committee unanimously voted to terminate Marketing Order No. 924. Since the only regulatory actions currently in effect are the reporting and assessment requirements, the Committee included a recommendation

to immediately suspend these activities while USDA processes the termination request. The reporting and assessment requirements will remain suspended until reinstated or permanently terminated.

DATES: Effective July 24, 2010, 7 CFR 924.160 and 924.236 are suspended indefinitely; comments received by September 21, 2010 will be considered prior to confirmation as a final rule.

ADDRESSES: Interested persons are invited to submit written comments concerning this rule. Comments must be sent to the Docket Clerk, Marketing Order Administration Branch, Fruit and Vegetable Programs, AMS, USDA, 1400 Independence Avenue, SW., STOP 0237, Washington, DC 20250–0237; Fax: (202) 720–8938; or Internet: *http://www.regulations.gov.* All comments should reference the document number and the date and page number of this issue of the **Federal Register** and will be made available for public inspection in the Office of the Docket Clerk during regular business hours, or can be viewed at: *http://www.regulations.gov.* All comments submitted in response to this rule will be included in the record and will be made available to the public. Please be advised that the identity of the individuals or entities submitting the comments will be made public on the Internet at the address provided above.

FOR FURTHER INFORMATION CONTACT: Robert Curry or Gary Olson, Northwest Marketing Field Office, Marketing Order Administration Branch, Fruit and Vegetable Programs, AMS, USDA; Telephone: (503) 326–2724, Fax: (503) 326–7440, or E-mail: *Robert.Curry@ams.usda.gov* or *GaryD.Olson@ams.usda.gov.*

Small businesses may request information on complying with this regulation by contacting Antoinette Carter, Marketing Order Administration Branch, Fruit and Vegetable Programs, AMS, USDA, 1400 Independence Avenue, SW., STOP 0237, Washington, DC 20250–0237; Telephone: (202) 720–2491, Fax: (202) 720–8938, or E-mail: *Antoinette.Carter@ams.usda.gov.*

SUPPLEMENTARY INFORMATION: This rule is issued under Marketing Agreement and Order No. 924 (7 CFR part 924), regulating the handling of fresh prunes grown in designated counties in Washington and in Umatilla County, Oregon, hereinafter referred to as the "order." The order is effective under the Agricultural Marketing Agreement Act of 1937, as amended (7 U.S.C. 601–674), hereinafter referred to as the "Act."

The Department of Agriculture (USDA) is issuing this rule in conformance with Executive Order 12866.

This rule has been reviewed under Executive Order 12988, Civil Justice Reform. Under the marketing order now in effect, Washington-Oregon fresh prune handlers are subject to assessments. Funds to administer the order are derived from such assessments. For the 2009–2010 fiscal period, an assessment rate of $2.00 per ton of fresh prunes handled was approved by USDA, to continue in effect indefinitely unless modified, suspended, or terminated. This action suspends the reporting requirements and the assessment rate for the 2010–2011 fiscal period, which began April 1, 2010, both remaining suspended until reinstated or permanently terminated.

The Act provides that administrative proceedings must be exhausted before parties may file suit in court. Under section 608c(15)(A) of the Act, any handler subject to an order may file with USDA a petition stating that the order, any provision of the order, or any obligation imposed in connection with the order is not in accordance with law and request a modification of the order or to be exempted therefrom. A handler is afforded the opportunity for a hearing on the petition. After the hearing, USDA would rule on the petition. The Act provides that the district court of the United States in any district in which the handler is an inhabitant, or has his or her principal place of business, has jurisdiction to review USDA's ruling on the petition, provided an action is filed not later than 20 days after the date of the entry of the ruling.

The Committee meets regularly to consider recommendations for modification, suspension, or termination of the Washington-Oregon fresh prune order's regulatory requirements, which have been issued on a continuing basis. Committee meetings are open to the public and interested persons may express their views at these meetings. The USDA reviews Committee recommendations, including information provided by the Committee and from other available sources, and determines whether modification, suspension, or termination of the regulatory requirements would tend to effectuate the declared policy of the Act.

This rule suspends § 924.236, which established an assessment rate of $2.00 per ton on or after April 1, 2009, and § 924.160, which implements assessment reporting requirements. On June 1, 2010, the Committee unanimously voted in favor of requesting that USDA terminate the order, and included a recommendation that the reporting and assessment requirements—the only regulatory activities still in effect at this time—be suspended while termination of the order is being processed by USDA under a separate regulatory action.

Section 924.41 of the order provides authority for the Committee to assess handlers for their pro rata share of the expenses authorized each fiscal period. Section 924.60 of the order authorizes the Committee to collect reports and other information as necessary for the Committee to perform its duties under the order. Section 924.236 implements the continuing assessment rate, while § 924.160 implements the requirement that handlers report specified information to the Committee prior to October 30 of each year. This report is used as a basis for the Committee's collection of assessments from handlers.

Marketing Order No. 924 has been in effect since 1960 and has provided the fresh prune industry in Washington and Oregon with authority for grade, size, quality, maturity, pack, and container regulations, as well as authority for inspection requirements. The order also authorizes production research and marketing research and development projects, as well as the necessary reporting and recordkeeping functions required for operation. Based on the Committee's recommendation, USDA suspended the order's handling regulations in May 2006. These handling regulations required that certain varieties of fresh prunes be inspected to ensure that they met minimum grade standards. The Committee believed that the costs of inspection outweighed the benefits provided from having the regulatory requirements in effect.

Following the regulatory suspension, the Committee continued to collect assessments in order to maintain its functionality. The Committee felt that it should continue to fund its full operational capability in order to gauge the merits of the handling regulation suspension. Therefore, when it recommended suspension of the handling regulations, the Committee also recommended the establishment of reporting requirements for the purpose of tracking shipments and collecting assessments. Prior to the handling regulation suspension, the Committee relied on the Federal-State Inspection Service to provide it with copies of the certificates that accompany each lot of inspected fresh prunes. The inspection certificates contained information necessary for the Committee to collect assessments from each of the regulated handlers. On May 10, 2006, a new section 924.160 and Committee form

"Handler Statement for Washington-Oregon Fresh Prunes" were implemented pursuant to publication in the **Federal Register** (71 FR 26817). The Committee used this form to collect fresh prune shipment information and to monitor market and crop conditions, thus helping it to make a determination regarding the impact of non-regulation on the industry.

The Washington-Oregon fresh prune industry has been in decline for many years, with acreage and production trending downward. This contributed to the suspension of the handling regulations in 2006. Since the handling regulations were suspended, the Committee has taken the opportunity to evaluate the suspension's effect on the marketing of fresh prunes over the past four years. Based on its analysis, the Committee has determined that the regulatory suspension has not negatively impacted the marketing of fresh prunes. Thus, the Committee determined that there is no longer a need for the order, and recommended its termination at a meeting held in Prosser, Washington, on June 1, 2010.

In addition, the Committee determined that there is no need to continue collecting assessments and requiring reports for the sole purpose of maintaining its functionality, thus recommended that the assessment rate and reporting requirements be immediately suspended. This action will relieve the industry of the assessment and reporting burden during the pendency of the termination process.

The Committee recommended a budget of $6,085 for the remainder of the period leading to order termination. The budgeted amount was established on the basis of the amount remaining in the Committee's monetary reserve. The budget in its entirety will provide for such operating expenses as are necessary during the termination process.

Initial Regulatory Flexibility Analysis

Pursuant to requirements set forth in the Regulatory Flexibility Act (RFA) (5 U.S.C. 601–612), the Agricultural Marketing Service (AMS) has considered the economic impact of this action on small entities. Accordingly, AMS has prepared this initial regulatory flexibility analysis.

The purpose of the RFA is to fit regulatory actions to the scale of business subject to such actions in order that small businesses will not be unduly or disproportionately burdened. Marketing orders issued pursuant to the Act, and the rules issued thereunder, are unique in that they are brought about through group action of essentially small entities acting on their own behalf.

There are six handlers of Washington-Oregon fresh prunes subject to regulation under the order and approximately 56 fresh prune producers in the regulated area. Small agricultural service firms are defined by the Small Business Administration (SBA) (13 CFR 121.201) as those having annual receipts of less than $7,000,000, and small agricultural producers are defined as those having annual receipts of less than $750,000.

Based on information compiled by both the Committee and the National Agricultural Statistics Service, the average producer price for fresh prunes was approximately $385 per ton. With 4,260 tons of fresh prunes shipped from the Washington and Oregon productions areas in 2009, this equates to average producer revenue of about $30,000. In addition, AMS Market News Service reported that 2009 f.o.b. prices ranged from $12.00 to $18.00 per 30-pound container, thus the entire Washington-Oregon fresh prune industry handled less than $7,000,000 worth of prunes last season. In view of the foregoing, the majority of Washington-Oregon fresh prune producers and handlers may be classified as small entities.

This rule suspends the reporting requirements regarding the collection of information pertaining to shipments and assessments under the order. It also suspends the assessment rate of $2.00 per ton established for the period beginning April 1, 2009, and continuing until modified, suspended, or terminated by USDA. The Committee recommended a budget of expenditures of $6,085 for the period beginning on April 1, 2010, and ending with termination of the order. This budget is based on the Committee's monetary reserve balance on April 1, 2010. Major expenses for the budget period beginning on April 1, 2010, are for Committee travel, the financial review, and management compensation.

The Committee made the recommendation to suspend the reporting and assessment requirements as an adjunct to the recommendation to terminate the order. As such, the only other alternative would have been to continue to assess handlers and to require reports, options not considered practicable since additional funds are not required.

This action suspends the reporting and assessment obligations imposed on handlers. During any period when effective, assessments are applied uniformly on all handlers and some of the costs may be passed on to producers. This suspension of the reporting and assessment requirements reduces the burden on handlers and should also reduce the burden on producers.

This rule will not impose any additional reporting or recordkeeping requirements on either small or large prune handlers. As with all Federal marketing order programs, reports and forms are periodically reviewed to reduce information requirements and duplication by industry and public sector agencies. In addition, USDA has not identified any relevant Federal rules that duplicate, overlap or conflict with this rule.

AMS is committed to complying with the E–Government Act, to promote the use of the Internet and other information technologies to provide increased opportunities for citizen access to Government information and services, and for other purposes.

The Committee's meeting was widely publicized throughout the Washington-Oregon fresh prune industry and all interested persons were invited to attend the meeting and participate in Committee deliberations. Like all Committee meetings, the June 1, 2010, meeting was a public meeting and all entities, both large and small, were able to express their views on this issue. Additionally, interested persons are invited to submit comments on this interim final rule, including the regulatory and informational impacts of this action on small businesses.

A small business guide on complying with fruit, vegetable, and specialty crop marketing agreements and orders may be viewed at: *http://www.ams.usda.gov/MarketingOrdersSmallBusinessGuide.* Any questions about the compliance guide should be sent to Antoinette Carter at the previously mentioned address in the **FOR FURTHER INFORMATION CONTACT** section.

This rule invites comments on the suspension of the reporting and assessment requirements prescribed under the Washington-Oregon fresh prune marketing order. Any comments received will be considered prior to finalization of this rule.

After consideration of all relevant material presented, including the Committee's recommendation, and other information, it is found that this interim final rule, as hereinafter set forth, will tend to effectuate the declared policy of the Act.

Pursuant to 5 U.S.C. 553, it is also found and determined upon good cause that it is impracticable, unnecessary, and contrary to the public interest to give preliminary notice prior to putting this rule into effect and that good cause

exists for not postponing the effective date of this rule until 30 days after publication in the **Federal Register** because: (1) The Committee has recommended prompt termination of the marketing order regulating the handling of Washington-Oregon fresh prunes and no longer requires reports or assessment income; (2) this action is a relaxation in the order's regulatory requirements; (3) the Committee unanimously recommended these changes at a public meeting and interested parties had an opportunity to provide input; and (4) this rule provides a 60-day comment period and any comments received will be considered prior to finalization of this rule.

List of Subjects in 7 CFR Part 924

Prunes, Marketing agreements, Reporting and recordkeeping requirements.

■ For the reasons set forth in the preamble, 7 CFR part 924 is amended as follows:

PART 924—FRESH PRUNES GROWN IN DESIGNATED COUNTIES IN WASHINGTON AND IN UMATILLA COUNTY, OREGON

■ 1. The authority citation for 7 CFR part 924 continues to read as follows:

Authority: 7 U.S.C. 601–674.

§§ 924.160 and 924.236 [Suspended]

■ 2. Sections 924.160 and 924.236 are suspended in their entirety.

Dated: July 20, 2010.

Rayne Pegg,

Administrator, Agricultural Marketing Service.

[FR Doc. 2010–18086 Filed 7–22–10; 8:45 am]

BILLING CODE 3410–02–P

DEPARTMENT OF AGRICULTURE

Agricultural Marketing Service

7 CFR Part 946

[Doc. No. AMS–FV–10–0052; FV10–946–1 IR]

Irish Potatoes Grown in Washington; Temporary Change to the Handling Regulations and Reporting Requirements

AGENCY: Agricultural Marketing Service, USDA.

ACTION: Interim rule with request for comments.

SUMMARY: This rule suspends, for the 2010–2011 season only, the minimum quality, maturity, pack, marking, and inspection requirements currently prescribed for russet potato varieties under the Washington potato marketing order. The marketing order regulates the handling of Irish potatoes grown in Washington, and is administered locally by the State of Washington Potato Committee (Committee). During the suspension of the russet potato handling regulation, reports from handlers will be required for the purpose of obtaining information necessary to administer the marketing order. This rule is expected to reduce overall industry expenses and increase net returns to producers and handlers while allowing the industry the opportunity to explore alternative marketing strategies.

DATES: Effective July 24, 2010; comments received by September 21, 2010 will be considered prior to issuance of a final rule. Pursuant to the Paperwork Reduction Act, comments on the information collection burden must be received by September 21, 2010.

ADDRESSES: Interested persons are invited to submit written comments concerning this rule. Comments must be sent to the Docket Clerk, Marketing Order Administration Branch, Fruit and Vegetable Programs, AMS, USDA, 1400 Independence Avenue, SW., STOP 0237, Washington, DC 20250–0237; Fax: (202) 720–8938; or Internet: *http://www.regulations.gov.* All comments should reference the document number and the date and page number of this issue of the **Federal Register** and will be made available for public inspection in the Office of the Docket Clerk during regular business hours, or can be viewed at: *http://www.regulations.gov.* All comments submitted in response to this rule will be included in the record and will be made available to the public. Please be advised that the identity of the individuals or entities submitting the comments will be made public on the Internet at the address provided above.

FOR FURTHER INFORMATION CONTACT: Teresa Hutchinson or Gary Olson, Northwest Marketing Field Office, Marketing Order Administration Branch, Fruit and Vegetable Programs, AMS, USDA, Telephone: (503) 326–2724, Fax: (503) 326–7440, or E-mail: *Teresa.Hutchinson@ams.usda.gov* or *GaryD.Olson@ams.usda.gov.*

Small businesses may request information on complying with this regulation by contacting Antoinette Carter, Marketing Order Administration Branch, Fruit and Vegetable Programs, AMS, USDA, 1400 Independence, Avenue SW., STOP 0237, Washington, DC 20250–0237; Telephone: (202) 720–2491, Fax: (202) 720–8938, or E-mail: *Antoinette.Carter@ams.usda.gov.*

SUPPLEMENTARY INFORMATION: This rule is issued under Marketing Order No. 946, as amended (7 CFR part 946), regulating the handling of Irish potatoes grown in Washington, hereinafter referred to as the "order." The order is effective under the Agricultural Marketing Agreement Act of 1937, as amended (7 U.S.C. 601–674), hereinafter referred to as the "Act."

The Department of Agriculture (USDA) is issuing this rule in conformance with Executive Order 12866.

This rule has been reviewed under Executive Order 12988, Civil Justice Reform. This rule is not intended to have retroactive effect.

The Act provides that administrative proceedings must be exhausted before parties may file suit in court. Under section 608c(15)(A) of the Act, any handler subject to an order may file with USDA a petition stating that the order, any provision of the order, or any obligation imposed in connection with the order is not in accordance with law and request a modification of the order or to be exempted therefrom. A handler is afforded the opportunity for a hearing on the petition. After the hearing, USDA would rule on the petition. The Act provides that the district court of the United States in any district in which the handler is an inhabitant, or has his or her principal place of business, has jurisdiction to review USDA's ruling on the petition, provided an action is filed not later than 20 days after the date of the entry of the ruling.

This rule suspends the order's handling regulation for russet potato varieties for the 2010–2011 season. This rule allows the Washington potato industry to market russet potatoes without regard to the minimum quality, maturity, pack, marking, and inspection requirements currently prescribed under the Washington potato marketing order. It is intended that the suspension will apply to the season beginning on July 1, 2010, and continuing through June 30, 2011. The minimum quality, maturity, pack, marking, and inspection requirements will resume July 1, 2011, for the 2011–2012 season and continue unless modified, suspended, or terminated.

This rule also establishes a new reporting requirement for russet potatoes handled during the same 12 month period. As assessments will remain in effect on all fresh russet potatoes handled under the order, reporting requirements will allow the Committee to obtain information necessary to facilitate assessment collection.

Section 946.52 of the order authorizes the establishment of grade, size, quality, or maturity regulations for any variety or varieties of potatoes grown in the production area. Section 946.52 also authorizes regulation of the size, capacity, weight, dimensions, pack, and marking or labeling of the container, or containers, which may be used in the packing or handling of potatoes, or both. Section 946.51 further authorizes the modification, suspension, or termination of regulations issued under § 946.52. Section 946.60 provides that whenever potatoes are regulated pursuant to § 946.52 such potatoes must be inspected by the Federal State Inspection Program (FSIP), and certified as meeting the applicable requirements of such regulations.

Section 946.70 authorizes the Committee, with the approval of USDA, to require information from handlers that will enable the Committee to exercise its duties under the order.

Section 946.336 of the order's administrative rules and regulations prescribes the grade, size, quality, cleanness, maturity, pack, marking, and inspection requirements for fresh market Washington potatoes.

The Committee meets regularly to consider recommendations for modification, suspension, or termination of the regulatory requirements for Washington potatoes which have been issued on a continuing basis. Committee meetings are open to the public and interested persons may express their views at these meetings. The USDA reviews Committee recommendations, information submitted by the Committee, and other available information, and determines whether modification, suspension, or termination of the regulatory requirements would tend to effectuate the declared policy of the Act.

At its January 26, 2010, meeting, the Committee was asked to evaluate the benefits of handling regulations and mandatory inspection for Washington potatoes. As a consequence, the Committee formed a subcommittee that met on May 11, 2010, to consider the implications of regulatory and inspection requirement suspension. Subsequently, at its June 1, 2010, meeting, the Committee unanimously recommended suspending the handling regulation for russet potatoes for the period beginning July 1, 2010, and ending on June 30, 2011, as well as establishing a requirement that handlers report their russet potato shipments during this period to the Committee on a specially developed form.

Historically, an objective of the order's handling regulations has been to ensure that quality Washington potatoes enter the fresh market, thereby ensuring consumer satisfaction, increased sales, and improved returns to producers. While the industry continues to support quality as an important factor in maintaining sales, the Committee believes the cost of inspection (mandated when the handling regulations are in effect) may exceed the benefits derived from the russet potato quality regulations.

With russet potato prices reportedly at low levels in recent years, the Committee, as noted earlier, has been studying the possibility of reducing costs through the elimination of mandatory inspection. In evaluating the relative benefits of quality control versus a regulation-free market, some concern was expressed at the meeting that elimination of the quality requirements could result in low quality potatoes being shipped to the fresh market, thereby negatively affecting consumer demand. Also, there is some concern that overall quality of the product may decline, and that the Washington potato industry could lose russet potato sales to production areas that are covered by quality and inspection requirements. Furthermore, because russet potatoes comprise about 76 percent of the fresh market Washington potato crop, the Committee is concerned about future availability of inspection services if the FSIP reduced staff as a result of the decrease in the demand for their services. With these concerns in mind, and having the desire to explore the benefits of non-regulation, the Committee recommended that the suspension of the russet potato handling regulation be effective for a temporary period only. This will enable the Committee to study the impacts of the suspension and consider appropriate actions for ensuing seasons.

This rule permits handlers to ship russet potatoes without regard to minimum quality, maturity, pack, marking, and inspection requirements for the period July 1, 2010, through June 30, 2011. Although this rule provides russet potato handlers the opportunity to decrease their total costs by elimination of the expenses associated with mandatory inspection, it does not restrict handlers from seeking inspection on a voluntary basis. The Committee will evaluate the temporary regulatory suspension at its next meeting.

This action will result in the elimination of the monthly FSIP inspection report for russet potatoes. The Committee uses these monthly reports—compiled by the FSIP from inspection certificates—as a basis for assessment collection. During the suspension of the regulations for russet potatoes, the Committee will require handler reports specific to russet potato shipments in order to collect assessments and to compile statistics.

Therefore, a new § 946.143 *Assessment reports* is added to the administrative rules and regulations requiring each person handling russet type potatoes to submit a monthly report to the Committee containing the following information: (a) The name and address of the handler; (b) the date and quantity of russet potatoes shipped; (c) the assessment payment due; and (d) other information as may be requested by the Committee. The first report shall include all required information from the effective date of this rule through the end of the month in which the assessment report information is approved by the Office of Management and Budget.

Authorization to assess handlers enables the Committee to incur expenses that are reasonable and necessary to administer the program. This reporting requirement will enable the Committee to continue collecting the funds needed to cover necessary program costs. Although adding reporting requirements, this rule, through the suspension of the handling regulation and thereby inspection, is expected to reduce overall industry expenses.

Initial Regulatory Flexibility Analysis

Pursuant to requirements set forth in the Regulatory Flexibility Act (RFA) (5 U.S.C. 601–612), the Agricultural Marketing Service (AMS) has considered the economic impact of this action on small entities. Accordingly, AMS has prepared this initial regulatory flexibility analysis.

The purpose of the RFA is to fit regulatory actions to the scale of business subject to such actions in order that small businesses will not be unduly or disproportionately burdened. Marketing orders issued pursuant to the Act, and rules issued thereunder, are unique in that they are brought about through group action of essentially small entities acting on their own behalf.

There are 45 handlers of Washington potatoes subject to regulation under the order (inclusive of the 33 russet potato handlers) and approximately 267 producers in the regulated production area. Small agricultural service firms are defined by the Small Business Administration (13 CFR 121.201) as those having annual receipts of less than $7,000,000, and small agricultural

producers are defined as those having annual receipts of less than $750,000.

During the 2008–2009 marketing year, the Committee reports that 10,279,734 hundredweight of Washington potatoes were shipped into the fresh market. Based on the USDA Economic Research Service estimate that the 2008 average f.o.b. price for fresh domestic potatoes was $8.42 per hundredweight, the average gross returns for each of the 45 handlers was less than $2,000,000.

In addition, based on information provided by the National Agricultural Statistics Service, the average producer price for Washington potatoes for 2009 was $7.10 per hundredweight. The average gross annual producer revenue for each of the 267 Washington potato producers is therefore calculated to be approximately $273,356. In view of the foregoing, the majority of Washington potato producers and handlers may be classified as small entities.

This rule suspends the handling regulation and establishes reporting requirements for russet type potatoes for the period beginning July 1, 2010, and ending June 30, 2011. This change is expected to reduce overall industry expenses while providing the industry with the opportunity to explore alternative marketing strategies.

The authority for regulation is provided in § 946.52 of the order, while authority for reports and records is provided in § 946.70. In addition, the handling regulation is specified under § 946.336 of the order's administrative rules and regulations.

The Committee anticipates that this rule will not negatively impact small businesses. This rule will suspend minimum quality, maturity, pack, marking, and inspection requirements. Though inspections will not be mandated for russet potatoes handled under the order, handlers may at their discretion choose to have their potatoes inspected. Handlers are thus able to control costs—which are generally passed on to producers—based on the demands of their customers. The Committee reports that during the 2008–2009 season, the total cost of inspection—at $0.07 per hundredweight for the approximately 7,800,000 hundredweight of Washington russet potatoes shipped—was about $546,000. This is approximately $12,133 per handler.

The Committee discussed alternatives to this recommendation. Other than not recommending any changes to the regulations, the Committee considered temporarily suspending the handling regulation for all types of potatoes, not just russet type potatoes. However, the Committee believes that it is beneficial to the industry to maintain the handling regulation and inspection requirements for round type potatoes. The Committee reports that round type potatoes generally command premium prices. The Washington potato industry believes that the order's round potato quality regulations, in conjunction with mandatory inspections, are valuable marketing tools. Therefore, the Committee recommended suspending the handling regulation for russet potatoes only.

An alternative to establishing the reporting requirements would have been relieving handlers from paying assessments on shipments of russet potatoes. Approximately 76 percent of the fresh potato shipments in Washington are russet varieties (as opposed to round white and round red or long white type potatoes), thus the Committee determined that it would not be able to cover its cost of operation should shipments of russet potatoes not be assessed.

This rule establishes a monthly reporting requirement for russet potato handlers. The report will provide the Committee with information necessary to track shipments and collect assessments. While this rule establishes new reporting requirements for russet potato shipments, the suspension of the handling regulation for russet potatoes also eliminates the more frequent reporting requirements that were included under the safeguard requirements for russet potatoes shipped under the order's special purpose shipment exemptions (§ 946.336(d) and (e)). Under these paragraphs, handlers are required to provide detailed reports whenever they divert regulated potatoes for livestock feed, charity, seed, prepeeling, processing, grading and storing in specified counties in Oregon, and experimentation.

Therefore, any additional reporting or recordkeeping requirements on either small or large russet potato handlers are expected to be offset by the elimination of other reporting requirements currently in effect. In addition, the suspension of the handling regulation and inspection requirements for russet potatoes is expected to further reduce industry expenses.

AMS is committed to complying with the E-Government Act, to promote the use of the Internet and other information technologies to provide increased opportunities for citizen access to Government information and services, and for other purposes.

USDA has not identified any relevant Federal rules that duplicate, overlap or conflict with this rule.

The Committee's meetings were widely publicized throughout the Washington potato industry and all interested persons were invited to participate in Committee deliberations. Like all committee meetings, the January 26, May 11, and June 1, 2010, meetings were public meetings, and all entities, both large and small, were able to express views on this issue. Further, interested persons are invited to submit comments on this interim rule, including the regulatory and informational impacts of this action on small businesses.

A small business guide on complying with fruit, vegetable, and specialty crop marketing agreements and orders may be viewed at: *http://www.ams.usda.gov/MarketingOrdersSmallBusinessGuide.* Any questions about the compliance guide should be sent to Antoinette Carter at the previously mentioned address in the **FOR FURTHER INFORMATION CONTACT** section.

Paperwork Reduction Act

In accordance with the Paperwork Reduction Act of 1995 (44 U.S.C. Chapter 35), the additional burden has been merged into the information collection which is currently under review for renewal under OMB No. 0581–0178, Generic OMB Vegetable and Specialty Crops.

Title: Irish Potatoes Grown in Washington—Marketing Order No. 946.

OMB Number: 0581–0178.

Type of Request: Revision of a currently approved collection.

Abstract: The information collection requirements in this request are essential to carry out the intent of the Act, to provide the respondents the type of service they request, and to administer the Washington potato order, which has been operating since 1949.

On June 1, 2010, the Committee unanimously recommended suspending the order's handling regulation for russet variety potatoes for the period beginning July 1, 2010, and ending June 30, 2011. To ensure that the Committee obtains handler information that is necessary for operation of the order, the Committee also unanimously recommended establishing a new reporting requirement. Information will be reported on a new Committee form, *Monthly Russet Fresh Potato Report,* which will require handlers to report, on a monthly basis, the total quantity of russet potatoes handled during the season. The first report shall include all required information from the effective date of this rule through the end of the month in which the assessment report information is approved by the Office of Management and Budget.

The new report is needed by the Committee to compile information that is essential for the collection of handler assessments and to provide statistical information to the industry. The Committee previously used monthly reports from the FSIP to obtain this information; reports that will no longer be available due to the suspension of the russet potato handling regulation. This new report will help to ensure compliance with the order's provisions and assist the Committee and the USDA with oversight and planning.

The information collected will be used only by authorized representatives of USDA, including AMS, Fruit and Vegetable Programs regional and headquarters staff, and authorized Committee employees. Authorized Committee employees will be the primary users of the information and AMS the secondary user.

The request for approval of the new information collection under the order is as follows:

Monthly Russet Fresh Potato Report.

Estimate of Burden: Public reporting burden for this collection of information is estimated to average 5 minutes per response.

Respondents: Washington russet potato handlers.

Estimated Number of Respondents: 33.

Estimated Number of Responses per Respondent: 12.

Estimated Total Annual Burden on Respondents: 33 hours.

Comments: Comments are invited on: (1) Whether the collection of information is necessary for the proper performance of the functions of the agency, including whether the information will have practical utility; (2) the accuracy of the agency's estimate of the burden of the collection of information, including the validity of the methodology and assumptions used; (3) ways to enhance the quality, utility, and clarity of the information to be collected; and (4) ways to minimize the burden of the collection of information on those who are to respond, including the use of appropriate automated, electronic, mechanical, or other technological collection techniques or other forms of information technology.

Comments should reference OMB No. 0581–NEW and the Washington potato order (Marketing Order No. 946), and be sent to USDA in care of the Docket Clerk at the previously mentioned address. All comments received will be available for public inspection during regular business hours at the same address.

All responses to this notice will be summarized and included in the request for OMB approval. All comments will become a matter of public record. As with all Federal marketing order programs, reports and forms are periodically reviewed to reduce information requirements and duplication by industry and public sector agencies.

This rule invites comments on a temporary change to the handling regulations and reporting requirements for russet potatoes under the Washington potato marketing order. Any comments received will be considered prior to finalization of this rule.

After consideration of all relevant material presented, including the Committee's recommendation, and other information, it is found that this interim rule, as hereinafter set forth, will tend to effectuate the declared policy of the Act.

Pursuant to 5 U.S.C. 553, it is also found and determined upon good cause that it is impracticable, unnecessary, and contrary to the public interest to give preliminary notice prior to putting this rule into effect and that good cause exists for not postponing the effective date of this rule until 30 days after publication in the **Federal Register** because: (1) Any changes resulting from this rule should be effective as soon as practicable because the Washington russet potato shipping season begins in July; (2) the Committee discussed and unanimously recommended these changes at a public meeting and all interested parties had an opportunity to provide input; (3) potato handlers are aware of this action and want to take advantage of relaxation of the handling regulations as soon as possible; and (4) this rule provides a 60-day comment period and any comments received will be considered prior to finalization of this rule.

List of Subjects in 7 CFR Part 946

Marketing agreements, Potatoes, Reporting and recordkeeping requirements.

■ For the reasons set forth in the preamble, 7 CFR part 946 is amended as follows:

PART 946—IRISH POTATOES GROWN IN WASHINGTON

■ 1. The authority citation for 7 CFR part 946 continues to read as follows:

Authority: 7 U.S.C. 601–674.

■ 2. A new § 946.143 is added to read as follows:

§ 946.143 Assessment reports.

During the period that russet type potatoes are exempt from handling requirements under § 946.336, each person handling russet type potatoes shall submit a monthly report to the committee by the 10th day of the month following the month such potatoes are handled: *Provided,* That the first report shall include all required information from July 26, 2010 through the end of the month in which the assessment report and its collection of information is approved by the Office of Management and Budget. Each assessment report shall contain the following information:

(a) The name and address of the handler;

(b) The date and quantity of russet type potatoes handled;

(c) The assessment payment due; and

(d) Other information as may be requested by the Committee.

■ 3. Section 946.336 is revised to read as follows:

§ 946.336 Handling regulation.

No person shall handle any lot of potatoes unless such potatoes meet the requirements of paragraphs (a), (b), (c), and (g) of this section or unless such potatoes are handled in accordance with paragraphs (d) and (e), or (f) of this section, except that shipments of the blue or purple flesh varieties of potatoes shall be exempt from both this handling regulation and the assessment requirements specified in § 946.41: *Provided,* That from July 24, 2010, through June 30, 2011, russet type potatoes shall be exempt from the requirements of paragraphs (a), (b), (c), (d), (e), and (g) of this section.

Dated: July 20, 2010.

Rayne Pegg,

Administrator, Agricultural Marketing Service.

[FR Doc. 2010–18091 Filed 7–22–10; 8:45 am]

BILLING CODE 3410–02–P

DEPARTMENT OF AGRICULTURE

Agricultural Marketing Service

7 CFR Part 983

[Doc. No. AMS–FV–10–0031; FV10–983–1 IR]

Pistachios Grown in California, Arizona, and New Mexico; Modification of the Aflatoxin Regulations

AGENCY: Agricultural Marketing Service, USDA.

ACTION: Interim rule with request for comments.

SUMMARY: This rule modifies the aflatoxin sampling and testing regulations currently prescribed under the California, Arizona, and New

Mexico pistachio marketing order (order). The order regulates the handling of pistachios grown in California, Arizona, and New Mexico and is administered locally by the Administrative Committee for Pistachios (Committee). This rule streamlines the aflatoxin sampling and testing procedures under the order's rules and regulations for pistachios to be shipped for domestic human consumption while maintaining sufficient aflatoxin controls. It is expected to reduce handler operating costs by providing a uniform and consistent aflatoxin sampling and testing procedure for pistachios shipped to all market destinations.

DATES: Effective July 24, 2010; comments received by September 21, 2010 will be considered prior to confirmation as a final rule.

ADDRESSES: Interested persons are invited to submit written comments concerning this rule. Comments must be sent to the Docket Clerk, Marketing Order Administration Branch, Fruit and Vegetable Programs, AMS, USDA, 1400 Independence Avenue SW., STOP 0237, Washington, DC 20250–0237; *Fax:* (202) 720–8938; or *Internet: http://www.regulations.gov.* All comments should reference the document number and the date and page number of this issue of the **Federal Register** and will be made available for public inspection in the Office of the Docket Clerk during regular business hours, or can be viewed at: *http://www.regulations.gov.* All comments submitted in response to this rule will be included in the record and will be made available to the public. Please be advised that the identity of the individuals or entities submitting the comments will be made public on the Internet at the address provided above.

FOR FURTHER INFORMATION CONTACT: Maria Stobbe, Marketing Specialist, or Kurt J. Kimmel, Regional Manager, California Marketing Field Office, Marketing Order Administration Branch, Fruit and Vegetable Programs, AMS, USDA; *Telephone:* (559) 487–5901, *Fax:* (559) 487–5906, or *E-mail: Maria.Stobbe@ams.usda.gov* or *Kurt.Kimmel@ams.usda.gov.*

Small businesses may request information on complying with this regulation by contacting Antoinette Carter, Marketing Order Administration Branch, Fruit and Vegetable Programs, AMS, USDA, 1400 Independence Avenue SW., STOP 0237, Washington, DC 20250–0237; *Telephone:* (202) 720–2491, *Fax:* (202) 720–8938, or *E-mail: Antoinette.Carter@ams.usda.gov.*

SUPPLEMENTARY INFORMATION: This rule is issued under Marketing Agreement and Order No. 983, as amended (7 CFR part 983), regulating the handling of pistachios grown in California, Arizona, and New Mexico, hereinafter referred to as the "order." The order is effective under the Agricultural Marketing Agreement Act of 1937, as amended (7 U.S.C. 601–674), hereinafter referred to as the "Act."

The Department of Agriculture (USDA) is issuing this rule in conformance with Executive Order 12866.

This rule has been reviewed under Executive Order 12988, Civil Justice Reform. This rule is not intended to have retroactive effect.

The Act provides that administrative proceedings must be exhausted before parties may file suit in court. Under section 608c(15)(A) of the Act, any handler subject to an order may file with USDA a petition stating that the order, any provision of the order, or any obligation imposed in connection with the order is not in accordance with law and request a modification of the order or to be exempted therefrom. A handler is afforded the opportunity for a hearing on the petition. After the hearing, USDA would rule on the petition. The Act provides that the district court of the United States in any district in which the handler is an inhabitant, or has his or her principal place of business, has jurisdiction to review USDA's ruling on the petition, provided an action is filed not later than 20 days after the date of the entry of the ruling.

This rule modifies the aflatoxin sampling and testing regulations currently prescribed under the order. It streamlines the aflatoxin sampling and testing procedures under the order's rules and regulations for pistachios to be shipped for domestic human consumption, while maintaining sufficient aflatoxin controls. It is expected to reduce handler operating costs by providing a uniform and consistent aflatoxin sampling and testing procedure for pistachios shipped to all market destinations. The Committee unanimously approved the recommended modifications at its meeting on April 6, 2010.

Section 983.50 of the pistachio marketing order provides authority for aflatoxin regulations that require pistachios to be sampled and tested for aflatoxin prior to being shipped for domestic human consumption.

Section 983.150 of the order's rules and regulations contains specific aflatoxin sampling and testing requirements and currently specifies that three test samples be drawn and prepared for all lots of inshell and shelled pistachios, regardless of lot size. The samples are then sent to USDA approved laboratories for analysis of aflatoxin content. Depending upon the analytical results of the first sample, up to two additional tests and averaging the results of all tests may be required to determine whether any lot may be certified as "negative" for aflatoxin. Handlers have the option to rework the lot prior to subsequent testing in order to meet the aflatoxin requirements.

When the order was promulgated in 2004, the aflatoxin sampling and testing regulations provided sufficient sampling and testing procedures for determining aflatoxin controls for pistachios shipped for domestic human consumption. These aflatoxin sampling and testing procedures allowed handlers to use similar operating procedures for both domestic and export shipments.

In March 2010, the European Commission (EC), the regulatory body of the European Union (EU), adopted a revised Codex Alimentarius Commission's (Codex) sampling plan as its regulation for the importation of tree nuts. Over the past few years, the percentage of U.S. pistachio crop being exported has increased significantly. Currently, more than 60 percent of the annual crop is exported, with slightly more than half of exports being shipped to the EU and requiring special testing and handling procedures. As a result, handlers face inconsistent operating procedures and increased operating costs as it has become necessary to use two different sampling and testing procedures: One for pistachios shipped for domestic human consumption and another for pistachios shipped to the EU.

In an effort to streamline operating procedures, while maintaining sufficient aflatoxin level controls, the Committee, at its April 6, 2010, meeting recommended decreasing the total weight of lot samples and increasing the weight of the test samples as specified in Table 1 for inshell pistachios and Table 2 for shelled pistachios under the order's administrative rules and regulations:

TABLE 1—INSHELL PISTACHIO LOT SAMPLING INCREMENTS FOR AFLATOXIN CERTIFICATION

Lot weight (lbs.)	Minimum number of incremental samples for the lot sample	Total weight of lot sample (kilograms)	Weight of test sample (kilograms)
220 or less	10	2.0	2.0
221–440	15	3.0	3.0
441–1,100	20	4.0	4.0
1,101–2,200	30	6.0	6.0
2,201–4,400	40	8.0	8.0
4,401–11,000	60	12.0	6.0
11,001–22,000	80	16.0	8.0
22,001–150,000	100	20.0	10.0

TABLE 2—SHELLED PISTACHIO KERNEL LOT SAMPLING INCREMENTS FOR AFLATOXIN CERTIFICATION

Lot weight (lbs.)	Minimum number of incremental samples for the lot sample	Total weight of lot sample (kilograms)	Weight of test sample (kilograms)
220 or less	10	1.0	1.0
221–440	15	1.5	1.5
441–1,100	20	2.0	2.0
1,101–2,200	30	3.0	3.0
2,201–4,400	40	4.0	4.0
4,401–11,000	60	6.0	3.0
11,001–22,000	80	8.0	4.0
22,001–150,000	100	10.0	5.0

The Committee also recommended changing § 983.150 to specify that for pistachio lots of up to 4,400 pounds, one test sample will be created from a minimum number of incremental samples and analyzed. For lots exceeding 4,400 pounds, two test samples will be created from a minimum number of incremental samples and analyzed. If the aflatoxin level in the first sample is 10 parts per billion (ppb) or less, the lot may be certified "negative" for aflatoxin and may be shipped. If the aflatoxin level is 20 ppb or less, the handler may either rework the lot and draw new samples for analysis, or direct that the second sample be analyzed. If the averaged results of the two analyses are 15 ppb or less, the lot may be certified "negative" for aflatoxin and may be shipped. Any lots exceeding the specified aflatoxin levels fail, and must be reported to the Committee. Failing lots may be reworked or destroyed or disposed of as described in § 983.152.

Further, the Committee recommended removing unnecessary language from § 983.150(a). In addition, the Committee also recommended changing the term Chromatograph in § 983.150(d)(3) to correctly read as Chromatography.

Initial Regulatory Flexibility Analysis

Pursuant to requirements set forth in the Regulatory Flexibility Act (RFA) (5 U.S.C. 601–612), the Agricultural Marketing Service (AMS) has considered the economic impact of this action on small entities. Accordingly, AMS has prepared this initial regulatory flexibility analysis.

The purpose of the RFA is to fit regulatory actions to the scale of business subject to such actions in order that small businesses will not be unduly or disproportionately burdened. Marketing orders issued pursuant to the Act, and the rules issued thereunder, are unique in that they are brought about through group action of essentially small entities acting on their own behalf.

There are approximately 29 handlers and 875 producers of pistachios in California, Arizona and New Mexico. Small business firms, which include handlers regulated under the order, have been defined by the Small Business Administration (SBA) (13 CFR 121.201) as those having annual receipts of less than $7,000,000. Small agricultural producers have been defined as those with annual receipts of less than $750,000.

Currently, about 72 percent of the California handlers ship less than $7,000,000 worth of pistachios on an annual basis and would therefore be considered small business firms under the SBA definition. Based on acreage, production, and grower prices reported by the Committee, the average annual revenue for small handlers is approximately $1,721,911. The industry has estimated that one of the Arizona handlers and all three New Mexico handlers would also be considered small businesses.

Data provided by the Committee regarding the size of the 2009 California crop indicates that approximately 630 California growers had 350,000 pounds or less of assessable dry weight of pistachios. Using the most recent grower price of $2.04 per pound for pistachios, it is estimated that 81 percent of California producers had receipts of approximately $714,000, which is less than $750,000, and thus would be considered small business according to the SBA definition. Although there is no official data available to date, as these states were recently added to the order and have not completed one full crop year for reporting purposes, the industry estimates that the majority of producers in Arizona and New Mexico would also be considered small businesses.

This rule modifies the aflatoxin sampling and testing regulations currently prescribed under the California, Arizona and New Mexico pistachio order. It streamlines the aflatoxin sampling and testing procedures under the order's rules and regulations for pistachios to be shipped for domestic human consumption while maintaining sufficient aflatoxin controls. It is expected to reduce handler operating costs by providing a uniform and consistent aflatoxin sampling and testing procedure for

pistachios shipped to all market destinations.

The impact of this regulatory modification was discussed by the Committee at its April 6, 2010, meeting. It is anticipated that all producers and handlers will benefit from this action regardless of size and regardless of the market they ship into, as it streamlines handler operations and increases marketing flexibility. Reducing the number of required samples, the number of aflatoxin analyses, and the total weight of the lot samples, while increasing the weight of the test samples for each lot is expected to result in an estimated annual savings to the industry of approximately $18,000, including reductions of $900 for sampling, $1,400 for testing, $12,750 for labor, and $3,750 in shipping costs for those small handlers that do not do testing on site.

The Committee discussed alternatives to this action at their April 6, 2010, meeting, including continuing to operate under the current aflatoxin regulations. However, the Committee unanimously agreed that operating with the current multiple sampling and testing procedures based upon shipping destination would continue to be confusing to the industry and would continue to generate higher handler operating costs. The recommended modification is expected to eliminate any confusion with regard to operating procedures, streamline handling operations, and lower handler operating costs.

This action will not impose any additional reporting or recordkeeping requirements on either small or large pistachio handlers. As with all Federal marketing order programs, reports and forms are periodically reviewed to reduce information requirements and duplication by industry and public sector agencies.

AMS is committed to complying with the E–Government Act, to promote the use of the Internet and other information technologies to provide increased opportunities for citizen access to Government information and services, and for other purposes.

In addition, USDA has not identified any relevant Federal rules that duplicate, overlap or conflict with this rule.

Further, the Committee's meeting was widely publicized throughout the pistachio industry and all interested persons were invited to attend the meeting and participate in Committee deliberations. Like all Committee meetings, the April 6, 2010, meeting was a public meeting and all entities, both large and small, were able to express their views on this issue. Finally, interested persons are invited to submit comments on this interim rule, including the regulatory and informational impacts of this action on small businesses.

A small business guide on complying with fruit, vegetable, and specialty crop marketing agreements and orders may be viewed at: *http://www.ams.usda.gov/AMSv1.0/ams.fetchTemplateData.do?template=TemplateN&page=MarketingOrdersSmallBusinessGuide.* Any questions about the compliance guide should be sent to Antoinette Carter at the previously mentioned address in the **FOR FURTHER INFORMATION CONTACT** section.

This rule invites comments on modifications to the aflatoxin regulations currently prescribed under the pistachio marketing order. Any comments received will be considered prior to finalization of this rule.

After consideration of all relevant material presented, including the Committee's recommendation, and other information, it is found that this interim rule, as hereinafter set forth, will tend to effectuate the declared policy of the Act.

Pursuant to 5 U.S.C. 553, it is also found and determined upon good cause that it is impracticable, unnecessary, and contrary to the public interest to give preliminary notice prior to putting this rule into effect and that good cause exists for not postponing the effective date of this rule until 30 days after publication in the **Federal Register** because: (1) These changes are necessary to provide consistency in handler operating procedures and to reduce handler operating costs; (2) handlers are aware of these changes, which were unanimously recommended by the Committee at a public meeting where interested parties had an opportunity to provide input; and (3) this rule provides a 60-day comment period, and any comments received will be considered prior to finalization of this rule.

List of Subjects in 7 CFR Part 983

Marketing agreements and orders, Pistachios, Reporting and recordkeeping requirements.

■ For the reasons set forth in the preamble, 7 CFR part 983 is amended as follows:

PART 983—PISTACHIOS GROWN IN CALIFORNIA, ARIZONA, AND NEW MEXICO

■ 1. The authority citation for 7 CFR part 983 continues to read as follows:

Authority: 7 U.S.C. 601–674.

■ 2. Amend § 983.150 by revising paragraphs (a), (d)(2), (d)(3), (d)(4), and (d)(6) to read as follows:

§ 983.150 Aflatoxin regulations.

(a) *Maximum level.* No handler shall ship for domestic human consumption, pistachios that exceed an aflatoxin level of 15 ppb. All shipments must also be covered by an aflatoxin inspection certificate. Pistachios that fail to meet the aflatoxin requirements shall be disposed in such manner as described in Failed lots/rework procedure of this part.

* * * * *

(d) * * *

(1) * * *

(2) *Test samples for aflatoxin.* Prior to submission of samples to an accredited laboratory for aflatoxin analysis, one sample ("test sample") shall be created from the pistachios designated for aflatoxin testing in compliance with Tables 1 and 2 of this paragraph for inshell and kernel pistachio lots that weigh up to and including 4,400 pounds. For lot sizes larger than 4,400 pounds, two samples ("test samples") shall be created equally from the pistachios designated for aflatoxin testing in compliance with the requirements to Tables 1 and 2 of this paragraph. The test samples shall be prepared by, or under the supervision of an inspector, or as approved under an alternative USDA-recognized inspection program. The test samples shall be designated by an inspector as Test Sample #1 and Test Sample #2. Each sample shall be placed in a suitable container, with the lot number clearly identified, and then submitted to an accredited laboratory. The gross weight of the inshell lot sample for aflatoxin testing and the minimum number of incremental samples required are shown in Table 1 of this paragraph. The gross weight of the kernel lot sample for aflatoxin testing and the minimum number of incremental samples required is shown in the Table 2 of this paragraph.

TABLE 1 TO § 983.150(d)(2)—INSHELL PISTACHIO LOT SAMPLING INCREMENTS FOR AFLATOXIN CERTIFICATION

Lot weight (lbs.)	Minimum number of incremental samples for the lot sample	Total weight of lot sample (kilograms)	Weight of test sample (kilograms)
220 or less	10	2.0	2.0
221–440	15	3.0	3.0
441–1,100	20	4.0	4.0
1,101–2,200	30	6.0	6.0
2,201–4,400	40	8.0	8.0
4,401–11,000	60	12.0	6.0
11,001–22,000	80	16.0	8.0
22,001–150,000	100	20.0	10.0

TABLE 2 TO § 983.150(d)(2)—SHELLED PISTACHIO KERNEL LOT SAMPLING INCREMENTS FOR AFLATOXIN CERTIFICATION

Lot weight (lbs.)	Minimum number of incremental samples for the lot sample	Total weight of lot sample (kilograms)	Weight of test sample (kilograms)
220 or less	10	1.0	1.0
221–440	15	1.5	1.5
441–1,100	20	2.0	2.0
1,101–2,200	30	3.0	3.0
2,201–4,400	40	4.0	4.0
4,401–11,000	60	6.0	3.0
11,001–22,000	80	8.0	4.0
22,001–150,000	100	10.0	5.0

(3) *Testing of pistachios.* Test samples shall be received and logged by an accredited laboratory and each test sample shall be prepared and analyzed using High Pressure Liquid Chromatography (HPLC), Vicam Method (Aflatest), or other methods as recommended by not fewer than eight members of the committee and approved by the Secretary. The aflatoxin level shall be calculated on a kernel weight basis.

(4) *Certification of lots "negative" as to aflatoxin.* (i) Lots which require a single test sample will be certified as "negative" on the aflatoxin certificate if the sample has an aflatoxin level at or below 15 ppb. If the aflatoxin level is above 15 ppb, the lot fails and the accredited laboratory shall fill out a failed lot notification report as specified in §§ 983.52 and 983.152.

(ii) Lots which require two test samples will be certified as "negative" on the aflatoxin inspection certificate if Test Sample #1 has an aflatoxin level at or below 10 ppb. If the aflatoxin level of Test Sample #1 is above 20 ppb, the lot fails and the accredited laboratory shall fill out a failed lot notification report as specified in §§ 983.52 and 983.152. If the aflatoxin level of Test Sample #1 is above 10 ppb and at or below 20 ppb, the accredited laboratory may at the handler's discretion analyze Test Sample #2 and the test results of Test Samples #1 and #2 will be averaged. Alternately, the handler may elect to withdraw the lot from testing, rework the lot, and resubmit it for testing after reworking. If the handler directs the laboratory to proceed with the analysis of Test Sample #2, a lot will be certified as negative to aflatoxin and the laboratory shall issue an aflatoxin inspection certificate if the averaged results of Test Sample #1 and Test Sample #2 is at or below 15 ppb. If the averaged aflatoxin level of Test Samples #1 and #2 is above 15 ppb, the lot fails and the accredited laboratory shall fill out a failed lot notification report as specified in §§ 983.52 and 983.152.

(iii) The accredited laboratory shall send a copy of the failed lot notification report to the Committee and to the failed lot's owner within 10 working days of any failure described in this section. If the lot is certified as negative as described in this section, the aflatoxin inspection certificate shall certify the lot using a certification form identifying each lot by weight, grade, and date. The certification expires for the lot or remainder of the lot after 12 months.

* * * * *

(6) *Test samples that are not used for analysis.* If a handler does not elect to use Test Sample #2 for certification purposes, the handler may request that the laboratory return it to the handler.

Dated: July 20, 2010.

Rayne Pegg,

Administrator, Agricultural Marketing Service.

[FR Doc. 2010–18089 Filed 7–22–10; 8:45 am]

BILLING CODE 3410–02–P

DEPARTMENT OF TRANSPORTATION

Federal Aviation Administration

14 CFR Part 39

[Docket No. FAA–2010–0733; Directorate Identifier 2010–CE–038–AD; Amendment 39–16375; AD 2010–15–09]

RIN 2120–AA64

Airworthiness Directives; Empresa Brasileira de Aeronautica S.A. (EMBRAER) Model EMB–500 Airplanes

AGENCY: Federal Aviation Administration (FAA), DOT.

ACTION: Final rule; request for comments.

SUMMARY: We are adopting a new airworthiness directive (AD) for the products listed above that will supersede an existing AD. This AD results from mandatory continuing airworthiness information (MCAI) issued by the aviation authority of another country to identify and correct an unsafe condition on an aviation product. The MCAI describes the unsafe condition as:

It has been found the possibility of heating deactivation of Air Data System (ADS) sensors due to its inadequate automatic logic, when ADS/AOA knob is on AUTO position associated with the following messages:

—DC BUS 1 OFF displayed on Crew Alerting System—CAS in conjunction with STBY HTR FAIL (which means loss of power on DC BUS 1); or

—EMER BUS OFF displayed on CAS (which means loss of power on EMERGENCY BUS); or

—ELEC EMERGENCY displayed on CAS (which means Electrical Emergency).

The loss of airplane air data sensors heating may cause ice buildup on their surfaces, which in turn may cause wrong pressure acquisitions resulting in erroneous flight parameters indication to the flight crew. Since this condition may occur in other airplanes of the same type and affects flight safety, an immediate corrective action is required. Thus, sufficient reason exists to request compliance with this AD in the indicated time limit.

This AD requires actions that are intended to address the unsafe condition described in the MCAI.

DATES: This AD becomes effective August 12, 2010.

We must receive comments on this AD by September 7, 2010.

ADDRESSES: You may send comments by any of the following methods:

- *Federal eRulemaking Portal:* Go to *http://www.regulations.gov.* Follow the instructions for submitting comments.
- *Fax:* (202) 493–2251.
- *Mail:* U.S. Department of Transportation, Docket Operations, M–30, West Building Ground Floor, Room W12–140, 1200 New Jersey Avenue, SE., Washington, DC 20590.
- *Hand Delivery:* U.S. Department of Transportation, Docket Operations, M–30, West Building Ground Floor, Room W12–140, 1200 New Jersey Avenue, SE., Washington, DC 20590, between 9 a.m. and 5 p.m., Monday through Friday, except Federal holidays.

Examining the AD Docket

You may examine the AD docket on the Internet at *http://www.regulations.gov;* or in person at the Docket Management Facility between 9 a.m. and 5 p.m., Monday through Friday, except Federal holidays. The AD docket contains this AD, the regulatory evaluation, any comments received, and other information. The street address for the Docket Office (telephone (800) 647–5527) is in the **ADDRESSES** section. Comments will be available in the AD docket shortly after receipt.

FOR FURTHER INFORMATION CONTACT: Karl Schletzbaum, Aerospace Engineer, FAA, Small Airplane Directorate, 901 Locust, Room 301, Kansas City, Missouri 64106; telephone: (816) 329–4146; fax: (816) 329–4090.

SUPPLEMENTARY INFORMATION:

Discussion

On November 2, 2009, we issued AD 2009–23–11, Amendment 39–16085 (74 FR 58195; November 12, 2009). That AD required actions intended to address an unsafe condition on the products listed above.

Since we issued AD 2009–23–11, Empresa Brasileira de Aeronáutica S.A. (EMBRAER) has issued service bulletin 500–27–0003, dated May 18, 2010. The service bulletin changes flap position 3 from 36 degrees to 26 degrees. The service bulletin also changes flap position 3 V_{ref} airspeeds and landing distance correction factors. Consequently, accomplishing the service bulletin necessitates changes to the Abnormal Procedures section of the FAA-approved airplane flight manual (AFM). The AFM changes were not included as part of the service bulletin.

The AGÊNCIA NACIONAL DE AVIAÇÃO CIVIL—BRAZIL, which is the aviation authority for Brazil, has issued AD No.: 2009–10–01R2, dated July 28, 2010 (referred to after this as "the MCAI"), to correct an unsafe condition for the specified products. The MCAI states:

It has been found the possibility of heating deactivation of Air Data System (ADS) sensors due to its inadequate automatic logic, when ADS/AOA knob is on AUTO position associated with the following messages:

—DC BUS 1 OFF displayed on Crew Alerting System—CAS in conjunction with STBY HTR FAIL (which means loss of power on DC BUS 1); or

—EMER BUS OFF displayed on CAS (which means loss of power on EMERGENCY BUS); or

—ELEC EMERGENCY displayed on CAS (which means Electrical Emergency).

The loss of airplane air data sensors heating may cause ice buildup on their surfaces, which in turn may cause wrong pressure acquisitions resulting in erroneous flight parameters indication to the flight crew. Since this condition may occur in other airplanes of the same type and affects flight safety, an immediate corrective action is required. Thus, sufficient reason exists to request compliance with this AD in the indicated time limit.

This AD action requires inserting information into the Abnormal Procedures section of the FAA-approved AFM. You may obtain further information by examining the MCAI in the AD docket.

FAA's Determination and Requirements of the AD

This product has been approved by the aviation authority of another country, and is approved for operation in the United States. Pursuant to our bilateral agreement with this State of Design Authority, they have notified us of the unsafe condition described in the MCAI and service information referenced above. We are issuing this AD because we evaluated all information provided by the State of Design Authority and determined the unsafe condition exists and is likely to exist or develop on other products of the same type design.

Differences Between This AD and the MCAI or Service Information

We have reviewed the MCAI and related service information and, in general, agree with their substance. But we might have found it necessary to use different words from those in the MCAI to ensure the AD is clear for U.S. operators and is enforceable. In making these changes, we do not intend to differ substantively from the information provided in the MCAI and related service information.

We might have also required different actions in this AD from those in the MCAI in order to follow FAA policies. Any such differences are described in a separate paragraph of the AD. These requirements take precedence over those copied from the MCAI.

FAA's Determination of the Effective Date

An unsafe condition exists that requires the immediate adoption of this AD. The FAA has found that the risk to the flying public justifies waiving notice and comment prior to adoption of this rule because the loss of airplane air data sensors heating may cause ice buildup on their surface. This condition may cause wrong pressure acquisitions, resulting in erroneous flight parameters indication to the flight crew. Therefore, we determined that notice and opportunity for public comment before issuing this AD are impracticable and that good cause exists for making this amendment effective in fewer than 30 days.

Comments Invited

This AD is a final rule that involves requirements affecting flight safety, and we did not precede it by notice and opportunity for public comment. We invite you to send any written relevant data, views, or arguments about this AD. Send your comments to an address listed under the **ADDRESSES** section. Include "Docket No. FAA–2010–0733; Directorate Identifier 2010–CE–038–AD" at the beginning of your comments. We specifically invite comments on the overall regulatory, economic, environmental, and energy aspects of this AD. We will consider all comments

received by the closing date and may amend this AD because of those comments.

We will post all comments we receive, without change, to *http://www.regulations.gov,* including any personal information you provide. We will also post a report summarizing each substantive verbal contact we receive about this AD.

Authority for This Rulemaking

Title 49 of the United States Code specifies the FAA's authority to issue rules on aviation safety. Subtitle I, section 106, describes the authority of the FAA Administrator. "Subtitle VII: Aviation Programs," describes in more detail the scope of the Agency's authority.

We are issuing this rulemaking under the authority described in "Subtitle VII, Part A, Subpart III, Section 44701: General requirements." Under that section, Congress charges the FAA with promoting safe flight of civil aircraft in air commerce by prescribing regulations for practices, methods, and procedures the Administrator finds necessary for safety in air commerce. This regulation is within the scope of that authority because it addresses an unsafe condition that is likely to exist or develop on products identified in this rulemaking action.

Regulatory Findings

We determined that this AD will not have federalism implications under Executive Order 13132. This AD will not have a substantial direct effect on the States, on the relationship between the national government and the States, or on the distribution of power and responsibilities among the various levels of government.

For the reasons discussed above, I certify that this AD:

(1) Is not a "significant regulatory action" under Executive Order 12866;

(2) Is not a "significant rule" under DOT Regulatory Policies and Procedures (44 FR 11034, February 26, 1979); and

(3) Will not have a significant economic impact, positive or negative, on a substantial number of small entities under the criteria of the Regulatory Flexibility Act.

We prepared a regulatory evaluation of the estimated costs to comply with this AD and placed it in the AD docket.

List of Subjects in 14 CFR Part 39

Air transportation, Aircraft, Aviation safety, Safety.

Adoption of the Amendment

■ Accordingly, under the authority delegated to me by the Administrator, the FAA amends 14 CFR part 39 as follows:

PART 39—AIRWORTHINESS DIRECTIVES

■ 1. The authority citation for part 39 continues to read as follows:

Authority: 49 U.S.C. 106(g), 40113, 44701.

§ 39.13 [Amended]

■ 2. The FAA amends § 39.13 by removing Amendment 39–16085 (74 FR 58195; November 12, 2009), and adding the following new AD:

2010–15–09 Empresa Brasileira de Aeronáutica S.A. (EMBRAER): Amendment 39–16375; Docket No. FAA–2010–0733; Directorate Identifier 2010–CE–038–AD.

Effective Date

(a) This airworthiness directive (AD) becomes effective August 12, 2010.

Affected ADs

(b) This AD supersedes AD 2009–23–11; Amendment 39–16085.

Applicability

(c) This AD applies to the following Empresa Brasileira de Aeronáutica S.A. (EMBRAER) Model EMB–500 airplanes, all serial numbers, certificated in any category:

(i) *Group 1 Airplanes* (retains the actions and applicability from AD 2009–23–11): Airplanes for which service bulletin (SB) 500–27–0003 has not been accomplished or that do not have an equivalent modification that was incorporated in the production line; and

(ii) *Group 2 Airplanes:* Airplanes for which SB 500–27–0003 has been accomplished or have an equivalent modification that was incorporated in the production line.

Subject

(d) Air Transport Association of America (ATA) Code 30: Ice and Rain Protection.

Reason

(e) The mandatory continuing airworthiness information (MCAI) states:

It has been found the possibility of heating deactivation of Air Data System (ADS) sensors due to its inadequate automatic logic, when ADS/AOA knob is on AUTO position associated with the following messages:

—DC BUS 1 OFF displayed on Crew Alerting System—CAS in conjunction with STBY HTR FAIL (which means loss of power on DC BUS 1); or

—EMER BUS OFF displayed on CAS (which means loss of power on EMERGENCY BUS); or

—ELEC EMERGENCY displayed on CAS (which means Electrical Emergency).

The loss of airplane air data sensors heating may cause ice buildup on their surfaces, which in turn may cause wrong pressure acquisitions resulting in erroneous flight parameters indication to the flight crew. Since this condition may occur in other airplanes of the same type and affects flight safety, an immediate corrective action is required. Thus, sufficient reason exists to request compliance with this AD in the indicated time limit.

This AD action requires inserting information into the Abnormal Procedures section of the FAA-approved airplane flight manual (AFM).

Actions and Compliance

(f) *Group 1 Airplanes:* unless already done, before further flight after December 2, 2009 (the effective date retained from AD 2009–23–11), incorporate into the AFM the following procedures section revisions. You may insert a copy of this AD into the appropriate sections of the AFM to comply with the requirements of this AD.

(1) Revise the AFM by replacing the ELECTRICAL EMERGENCY procedures in AFM section 4–08, Abnormal Procedures, with Figure 1:

ELECTRICAL EMERGENCY

Reset both generators.

If message persists:

LAND AS SOON AS POSSIBLE.

ADS/AOA Knob..... ON

Exit and avoid icing conditions.

Confirm that IESI has reverted. If not, select ADSTBY on PFD.

PRESSURIZATION MODE Selector.... MAN

CABIN ALT Switch..... AS REQUIRED

Airspeed..... 250 KIAS MAXIMUM

Altitude..... 25000 ft MAXIMUM

CAUTION: BATTERIES DURATION IS 45 MINUTES MAXIMUM.

When landing maintain airspeed according to the following:

FLAPS POSITION	MINIMUM AIRSPEED
0	$V_{REF\ FULL}$ + 30 KIAS
1	$V_{REF\ FULL}$ + 15 KIAS
2	$V_{REF\ FULL}$ + 5 KIAS
3 and FULL	$V_{REF\ FULL}$

NOTE: - If flaps stop between two positions, use the minimum airspeed associated to the next retracted position and the V_{FE} associated to the next extended position.

- Disregard green circle indication, as it may indicate slower speeds.

During landing run:

Emergency/Parking Brake..... APPLY

CAUTION: WHEN APPLYING EMERGENCY BRAKES, PULL THE HANDLE PROGRESSIVELY, MONITORING THE EMERGENCY/PARKING BRAKE LIGHT.

NOTE: The emergency/parking brake accumulator allows 6 actuations.

(Continues on the next page)

(Continued from the previous page)

CAUTION: TO DETERMINE THE MINIMUM SUITABLE LANDING DISTANCE, MULTIPLY THE UNFACTORED LANDING DISTANCE FOR FLAPS FULL BY ONE OF THE FACTORS BELOW:

FLAPS POSITION	CORRECTION FACTOR
0	2.25
1	1.75
2	1.65
3 and FULL	1.50

If a go-around is required, maintain the minimum airspeed presented in the applicable flaps configuration from the table above, until the acceleration altitude is reached.

The list below presents the relevant inoperative equipment. Items marked with an asterisk have dedicated failure procedures, which may have to be performed, at pilot's discretion:

- ADC 1 and 2 (*)
- AHRS 2 (*)
- Air Conditioning
- Anti-Ice/De-Ice Systems
- Audio Panel 2 (*)
- Autopilot (*)
- DMEs
- Flap System (*)
- FMS Panel
- GIA 2 (*)
- GPS 2/VOR 2/ILS 2
- Landing/Taxi Lights
- Main Brake (*)
- PFD 2
- Pitch Trim (Main) (*)
- Pressurization Auto (*)
- Roll Trim
- Stick Pusher (*)
- TCAS
- Transponder 2
- VHF 2
- Windshield Heater (*)
- WX Radar
- Yaw Damper
- Yaw Trim

Figure 1 – AFM Section 4-08, ELECTRICAL EMERGENCY

(2) Revise the AFM by replacing the DC BUS 1 OFF procedure in AFM section 4–08, Abnormal Procedures, with Figure 2:

DC BUS 1 OFF

ADS/AOA Knob..... ON
Icing Conditions..... EXIT/AVOID

For landing procedures:
- Maintain airspeed according to the following:

FLAPS POSITION	MINIMUM AIRSPEED	
	NO ICING	IN ICING/WITH ICE
0	$V_{REF\ FULL}$ + 25 KIAS	$V_{REF\ FULL}$ + 40 KIAS
1	$V_{REF\ FULL}$ + 15 KIAS	$V_{REF\ FULL}$ + 35 KIAS
2	$V_{REF\ FULL}$ + 5 KIAS	$V_{REF\ FULL}$ + 30 KIAS
3 and FULL	$V_{REF\ FULL}$	$V_{REF\ FULL}$ + 25 KIAS

NOTE: - If flaps stop between two positions, use the minimum airspeed associated to the next retracted position and V_{FE} associated to the next extended position.

- Disregard green circle indication, as it may indicate slower speeds.

CAUTION: TO DETERMINE THE MINIMUM SUITABLE LANDING DISTANCE, MULTIPLY THE UNFACTORED LANDING DISTANCE FOR FLAPS FULL BY ONE OF THE FACTORS BELOW:

FLAPS POSITION	CORRECTION FACTOR	
	NO ICING	IN ICING/WITH ICE
0	1.40	1.70
1	1.20	1.60
2	1.10	2.00
3 and FULL	1.00	1.95

The list below presents the relevant inoperative equipment. Items marked with an asterisk have dedicated failure procedures, which may have to be performed, at pilot's discretion:

- ADC 1 (*)
- Cockpit FCSOV
- De-Ice System (*)
- DME 1
- Engine 1 Anti-Ice (*)
- Engine 1 Flowmeter
- Flap System (*)
- Left Landing/Taxi Light
- Roll Trim
- Stick Pusher (*)
- VHF 2
- Windshield Heater 1 (*)
- WX Radar
- Yaw Trim

Figure 2 – AFM Section 4-08, DC BUS 1 OFF

(3) Revise the AFM by replacing the EMERGENCY BUS OFF procedure in AFM section 4–08, Abnormal Procedures, with Figure 3:

EMERGENCY BUS OFF

ADS/AOA Knob..... ON

Airspeed ..... 250 KIAS MAXIMUM

Altitude..... 25000 ft MAXIMUM

The list below presents the relevant inoperative equipment. Items marked with an asterisk have dedicated failure procedures, which may have to be performed, at pilot's discretion:

- AHRS 1 (*)
- Audio Panel 1 (*)
- Autopilot (*)
- EFCU 1
- Engines Fire Detection (*)
- Flight Director 1
- AFCS Control Unit
- Fuel Booster Pumps
- Fuel Shutoff Valves
- Fuel Transfer Valve (*)
- GIA 1 (*)
- GPS 1/VOR 1/ILS 1
- LDG Indication/Warning
- Red Beacon
- Oxygen Transducer
- Pax Mask Deploy (Auto)
- PFD 1
- Pitch Trim (Back-Up) (*)
- PRSOV 1 & 2
- Transponder 1
- Stick Pusher (*)
- Stall Warning
- WOW (*)
- Yaw Damper

Figure 3 – AFM Section 4-08, EMERGENCY BUS OFF

(g) *Group 2 Airplanes:* Unless already done, before further flight after August 12, 2010 (the effective date of this AD), incorporate into the AFM the following procedures section revisions. You may insert a copy of this AD into the appropriate sections of the AFM to comply with the requirements of this AD.

(1) Revise the AFM by replacing the ELECTRICAL EMERGENCY procedures in AFM section 4–08, Abnormal Procedures, with Figure 4:

ELECTRICAL EMERGENCY

Reset both generators.

If message persists:

LAND AS SOON AS POSSIBLE.

ADS/AOA Knob..... ON

Exit and avoid icing conditions.

Confirm that IESI has reverted. If not, select ADSTBY on PFD.

PRESSURIZATION MODE Selector.... MAN

CABIN ALT Switch..... AS REQUIRED

Airspeed..... 250 KIAS MAXIMUM

Altitude..... 25000 ft MAXIMUM

CAUTION: BATTERIES DURATION IS 45 MINUTES MAXIMUM.

When landing maintain airspeed according to the following:

FLAPS POSITION	MINIMUM AIRSPEED
0	$V_{REF\ FULL}$ + 30 KIAS
1	$V_{REF\ FULL}$ + 15 KIAS
2 and 3	$V_{REF\ FULL}$ + 5 KIAS
FULL	$V_{REF\ FULL}$

NOTE: - If flaps stop between two positions, use the minimum airspeed associated to the next retracted position and the V_{FE} associated to the next extended position.

- Disregard green circle indication, as it may indicate slower speeds.

During landing run:

Emergency/Parking Brake..... APPLY

CAUTION: WHEN APPLYING EMERGENCY BRAKES, PULL THE HANDLE PROGRESSIVELY, MONITORING THE EMERGENCY/PARKING BRAKE LIGHT.

NOTE: The emergency/parking brake accumulator allows 6 actuations.

(Continues on the next page)

(Continued from the previous page)

CAUTION: TO DETERMINE THE MINIMUM SUITABLE LANDING DISTANCE, MULTIPLY THE UNFACTORED LANDING DISTANCE FOR FLAPS FULL BY ONE OF THE FACTORS BELOW:

FLAPS POSITION	CORRECTION FACTOR
0	2.25
1	1.75
2 and 3	1.65
FULL	1.50

If a go-around is required, maintain the minimum airspeed presented in the applicable flaps configuration from the table above, until the acceleration altitude is reached.

The list below presents the relevant inoperative equipment. Items marked with an asterisk have dedicated failure procedures, which may have to be performed, at pilot's discretion:

- ADC 1 and 2 (*)
- AHRS 2 (*)
- Air Conditioning
- Anti-Ice/De-Ice Systems
- Audio Panel 2 (*)
- Autopilot (*)
- DMEs
- Flap System (*)
- FMS Panel
- GIA 2 (*)
- GPS 2/VOR 2/ILS 2
- Landing/Taxi Lights
- Main Brake (*)
- PFD 2
- Pitch Trim (Main) (*)
- Pressurization Auto (*)
- Roll Trim
- Stick Pusher (*)
- TCAS
- Transponder 2
- VHF 2
- Windshield Heater (*)
- WX Radar
- Yaw Damper
- Yaw Trim

Figure 4 – AFM Section 4-08, ELECTRICAL EMERGENCY

(2) Revise the AFM by replacing the DC BUS 1 OFF procedure in AFM section 4–08, Abnormal Procedures, with Figure 5:

DC BUS 1 OFF

ADS/AOA Knob..... ON
Icing Conditions..... EXIT/AVOID

For landing procedures:
- Maintain airspeed according to the following:

FLAPS POSITION	MINIMUM AIRSPEED	
	NO ICING	IN ICING/WITH ICE
0	$V_{REF\ FULL}$ + 25 KIAS	$V_{REF\ FULL}$ + 40 KIAS
1	$V_{REF\ FULL}$ + 15 KIAS	$V_{REF\ FULL}$ + 35 KIAS
2 and 3	$V_{REF\ FULL}$ + 5 KIAS	$V_{REF\ FULL}$ + 30 KIAS
FULL	$V_{REF\ FULL}$	$V_{REF\ FULL}$ + 25 KIAS

NOTE: - If flaps stop between two positions, use the minimum airspeed associated to the next retracted position and V_{FE} associated to the next extended position.

- Disregard green circle indication, as it may indicate slower speeds.

CAUTION: TO DETERMINE THE MINIMUM SUITABLE LANDING DISTANCE, MULTIPLY THE UNFACTORED LANDING DISTANCE FOR FLAPS FULL BY ONE OF THE FACTORS BELOW:

FLAPS POSITION	CORRECTION FACTOR	
	NO ICING	IN ICING/WITH ICE
0	1.40	1.70
1	1.20	1.60
2 and 3	1.10	2.00
FULL	1.00	1.95

The list below presents the relevant inoperative equipment. Items marked with an asterisk have dedicated failure procedures, which may have to be performed, at pilot's discretion:

- ADC 1 (*)
- Cockpit FCSOV
- De-Ice System (*)
- DME 1
- Engine 1 Anti-Ice (*)
- Engine 1 Flowmeter
- Flap System (*)
- Left Landing/Taxi Light
- Roll Trim
- Stick Pusher (*)
- VHF 2
- Windshield Heater 1 (*)
- WX Radar
- Yaw Trim

Figure 5 – AFM Section 4-08, DC BUS 1 OFF

(3) Revise the AFM by replacing the EMERGENCY BUS OFF procedure in AFM section 4–08, Abnormal Procedures, with Figure 6:

EMERGENCY BUS OFF

ADS/AOA Knob..... ON

Airspeed ..... 250 KIAS MAXIMUM

Altitude..... 25000 ft MAXIMUM

The list below presents the relevant inoperative equipment. Items marked with an asterisk have dedicated failure procedures, which may have to be performed, at pilot's discretion:

- AHRS 1 (*)
- Audio Panel 1 (*)
- Autopilot (*)
- EFCU 1
- Engines Fire Detection (*)
- Flight Director 1
- AFCS Control Unit
- Fuel Booster Pumps
- Fuel Shutoff Valves
- Fuel Transfer Valve (*)
- GIA 1 (*)
- GPS 1/VOR 1/ILS 1
- LDG Indication/Warning
- Red Beacon
- Oxygen Transducer
- Pax Mask Deploy (Auto)
- PFD 1
- Pitch Trim (Back-Up) (*)
- PRSOV 1 & 2
- Transponder 1
- Stick Pusher (*)
- Stall Warning
- WOW (*)
- Yaw Damper

Figure 6 – AFM Section 4-08, EMERGENCY BUS OFF

FAA AD Differences

Note: This AD differs from the MCAI and/or service information as follows: No differences.

Other FAA AD Provisions

(h) The following provisions also apply to this AD:

(1) *Alternative Methods of Compliance (AMOCs):* The Manager, Standards Office, FAA, has the authority to approve AMOCs for this AD, if requested using the procedures found in 14 CFR 39.19. Send information to Attn.: Karl Schletzbaum, Aerospace Engineer, FAA, Small Airplane Directorate, 901 Locust, Room 301, Kansas City, Missouri 64106; telephone: (816) 329–4146; fax: (816) 329–4090. Before using any approved AMOC on any airplane to which the AMOC applies, notify your appropriate principal inspector (PI) in the FAA Flight Standards District Office (FSDO), or lacking a PI, your local FSDO.

(2) *Airworthy Product:* For any requirement in this AD to obtain corrective actions from a manufacturer or other source, use these actions if they are FAA-approved. Corrective actions are considered FAA-approved if they are approved by the State of Design Authority (or their delegated agent). You are required to assure the product is airworthy before it is returned to service.

(3) *Reporting Requirements:* For any reporting requirement in this AD, under the provisions of the Paperwork Reduction Act (44 U.S.C. 3501 et.seq.), the Office of Management and Budget (OMB) has approved the information collection requirements and has assigned OMB Control Number 2120–0056.

Related Information

(i) Refer to MCAI ANAC, AD No.: 2009–10–01R2, dated July 28, 2010, for related information.

Issued in Kansas City, Missouri, on July 16, 2010.

Kim Smith,

Manager, Small Airplane Directorate,

Aircraft Certification Service.

[FR Doc. 2010–18015 Filed 7–22–10; 8:45 am]

BILLING CODE 4910–13–P

DEPARTMENT OF ENERGY

Federal Energy Regulatory Commission

18 CFR Parts 38 and 40

[Docket Nos. RM08–19–003, RM05–5–019; Order No. 729–B]

Mandatory Reliability Standards for the Calculation of Available Transfer Capability, Capacity Benefit Margins, Transmission Reliability Margins, Total Transfer Capability, and Existing Transmission Commitments; Mandatory Reliability Standards for the Bulk-Power System; and Standards for Business Practices and Communications Protocols for Public Utilities

July 15, 2010.

AGENCY: Federal Energy Regulatory Commission.

ACTION: Order on Rehearing and Reconsideration.

SUMMARY: In this order, the Commission grants several requests for rehearing of Order No. 729–A, which, *inter alia,* provided clarification of the implementation timeline for the six Modeling Data, and Analysis Reliability Standards submitted by the North American Electric Reliability Corporation and approved by the Commission in Order No. 729. As discussed below, the Commission grants rehearing on the implementation timeline. In addition, the Commission is revising the implementation deadline for compliance with the related North American Energy Standards Board business practice standards incorporated by reference in Order No. 676–E, so that the deadlines for compliance with the requirements of Order Nos. 729 and 676–E remain consistent.

DATES: *Effective Date:* This rule will become effective August 23, 2010. Accordingly, the North American Electric Reliability Corporation Reliability Standards approved in Order No. 729 shall be implemented on April 1, 2011. The related North American Energy Standards Board business practice standards shall be implemented on the same date as the Reliability Standards, as discussed below.

FOR FURTHER INFORMATION CONTACT:

Cory Lankford (Legal Information), Office of the General Counsel, Federal Energy Regulatory Commission, 888 First Street, NE., Washington, DC 20426. (202) 502–6711.

Christopher Young (Technical Information), Office of Electric Reliability, Federal Energy Regulatory Commission, 888 First Street, NE., Washington, DC 20426. (202) 502–6403.

Valerie Roth (Technical Information), Office of Energy Policy Innovations, Federal Energy Regulatory Commission, 888 First Street, NE., Washington, DC 20426. (202) 502–8538.

SUPPLEMENTARY INFORMATION:

Before Commissioners: Jon Wellinghoff, Chairman; Marc Spitzer, Philip D. Moeller, John R. Norris, and Cheryl A. LaFleur.

In the matter of: RM08–19–003, Mandatory Reliability Standards for the Calculation of Available Transfer Capability, Capacity Benefit Margins, Transmission Reliability Margins, Total Transfer Capability, and Existing Transmission Commitments; Mandatory Reliability Standards for the Bulk-Power System.

RM05–5–019, Standards for Business Practices and Communication Protocols for Public Utilities.

Order No. 729–B

Order on Rehearing and Reconsideration

Issued July 15, 2010

1. In this order, the Commission grants several requests for rehearing of Order No. 729–A, which, *inter alia,* provided clarification of the implementation timeline for six Modeling Data, and Analysis (MOD) Reliability Standards submitted by the North American Electric Reliability Corporation (NERC) and approved by the Commission in Order No. 729.[1] As discussed below, the Commission grants rehearing on the implementation timeline. In addition, the Commission is revising the implementation deadline for compliance with the related North American Energy Standards Board (NAESB) business practice standards incorporated by reference in Order No. 676–E,[2] so that the deadlines for compliance with the requirements of Order Nos. 729 and 676–E remain consistent.

I. Background

2. On November 24, 2009, the Commission issued Order No. 729, which approved six MOD Reliability Standards submitted to the Commission by the North American Electric Reliability Corporation (NERC), the Commission-certified Electric Reliability Organization (ERO) for the United States.[3] The approved Reliability Standards pertain to methodologies for the consistent and transparent calculation of available transfer capability or available flowgate capability. Pursuant to section 215(d)(5) of the Federal Power Act (FPA),[4] the Commission directed the ERO to develop certain modifications to the MOD Reliability Standards. The Commission also directed NERC to retire the existing MOD Reliability Standards replaced by the versions approved in the Final Rule once the new versions became effective.

3. On the same date, the Commission issued Order No. 676–E, which revised the Commission's regulations to incorporate by reference in its regulations the latest version (Version 002.1) of certain business practice standards adopted by the Wholesale Electric Quadrant (WEQ) of NAESB. In addition, the Commission directed public utilities to file any necessary tariff revisions, including any revisions to Attachment C to their Open Access Transmission Tariff (OATT), at least ninety days before the prescribed date of compliance with the revised business practice standards, which was meant to be coincident with the implementation date for compliance with the MOD Reliability Standards approved in Order No. 729.

II. Discussion

4. In Order No. 729, the Commission directed that the Reliability Standards become effective according to the schedule proposed by the ERO.[5] Thus, the Commission stated that the MOD Reliability Standards shall become effective on the first calendar quarter that is twelve months beyond the date that the Reliability Standards are approved "by all applicable regulatory authorities."[6] The Commission found that this implementation schedule struck a reasonable balance between the need for timely reform and the needs of transmission service providers and transmission operators to make adjustments to their calculations of available transfer capability, capacity benefit margin and transfer reserve margin. In response to comments on its notice of proposed rulemaking, the Commission clarified that, under this plan, the Reliability Standards shall become effective on the first day of the first quarter occurring 365 days after approval by all applicable regulatory authorities. Approval by the Commission would be effective 60 days after the date of publication of the Final Rule in the **Federal Register**.[7]

5. Order No. 676–E set the implementation date for compliance with the NAESB business practice standards coincident with the implementation date of the MOD Reliability Standards approved in Order No. 729. Accordingly, public utilities subject to the NAESB business practice standards were directed to comply with these Version 002.1 business practice standards as of the first day of the first quarter occurring 365 days after approval of the MOD Reliability Standards by all applicable regulatory authorities. Implementation of some of

[1] *Mandatory Reliability Standards for the Calculation of Available Transfer Capability, Capacity Benefit Margins, Transmission Reliability Margins, Total Transfer Capability, and Existing Transmission Commitments and Mandatory Reliability Standards for the Bulk-Power System,* Order No. 729, 129 FERC ¶ 61,155 (2009), *order on reh'g,* Order No. 729–A, 131 FERC ¶ 61,109 (2010).

[2] *Standards for Business Practices and Communication Protocol for Public Utilities,* Order No. 676–E, 74 FR 63288 (Dec. 3, 2009), FERC Stats. & Regs. ¶ 31,299, at P 126 (Nov. 24, 2009).

[3] *North American Electric Reliability Corp.,* 116 FERC ¶ 61,062, *order on reh'g & compliance,* 117 FERC ¶ 61,126 (2006), *aff'd sub nom. Alcoa Inc.* v. *FERC,* 564 F.3d 1342 (DC Cir. 2009).

[4] 16 U.S.C. 824o(d)(5) (2006).

[5] Order No. 729, 129 FERC ¶ 61,155 at P 95.

[6] *Id.*

[7] *Id.*

the NAESB business standards will require tariff revisions. The Commission also directed public utilities to submit necessary tariff revisions, including any revisions to Attachment C of their OATT, at least ninety days before the prescribed date for compliance with the revised standards.

6. In response to several requests for clarification, the Commission issued Order No. 729–A, which, among other things, clarified the implementation timeline of the MOD Reliability Standards. Again, the Commission accepted the clarification offered by the ERO in its comments and clarified that the Reliability Standards shall become effective within the United States on the first day of the first quarter occurring 365 days after Order No. 729 was published in the **Federal Register**, i.e., January 1, 2011.[8]

7. The Commission also recognized that compliance with these MOD Reliability Standards requires an exchange of information and data among neighboring transmission service providers. The Commission stated that, in some instances, a transmission service provider within the United States may need to exchange information and data with a neighboring transmission service provider located in a jurisdiction where the Reliability Standard is not yet enforceable, such as some Canadian provinces. In this situation, the Commission determined that the transmission service provider within the United States must share information with the transmission service provider located in another jurisdiction pursuant to the requirements of the MOD Reliability Standards. But, the Commission clarified, the transmission service providers and transmission operators within the continental United States who must rely on information and data from utilities located in another country to comply with these Reliability Standards shall not be penalized solely for the failure of a utility located in another jurisdiction to provide such information and data, until such time that the MOD Reliability Standards become mandatory in that foreign jurisdiction.

Requests for Rehearing

8. Several petitioners requested rehearing of the clarified implementation schedule. Bonneville Power Administration (Bonneville), the Large Public Power Council (LPPC), Southwest Area Transmission Subregional Planning Group (SWAT), and WestConnect request a July 1, 2011, implementation date. Bonneville suggests that the Commission do this by clarifying that the effective date of the MOD Reliability Standards is the first day of the first quarter occurring 365 days after publication of Order No. 729–A in the **Federal Register**, *i.e.,* July 1, 2011. By contrast, LPPC and WestConnect argue that their members reasonably presumed a July 1, 2011, implementation date when the Canadian authorities failed to approve the MOD Reliability Standards within three months of the Commission's approval and have been acting in reliance of that date. SWAT simply states that a July 1, 2011, effective date is consistent with the notice given to industry in Order No. 729 and that for the sake of the reliable operation of the Bulk-Power System and efficient and orderly implementation of the new MOD Reliability Standards, the effective date in the United States should be set as July 1, 2011. If the Commission rejects the proposed July 1, 2011, effective date, all of these petitioners request, in the alternative, that the Commission set the effective date no earlier than April 1, 2011, which is the first day of the first quarter occurring 365 days after Commission approval of the MOD Reliability Standards.

9. Other petitioners advocate for an April 1, 2011, effective date. Midwest Independent Transmission System Operation, Inc. (MISO), NorthWestern Corp. (NorthWestern), PJM Interconnection, L.L.C. (PJM) and Southwest Power Pool, Inc. (SPP) argue that they have relied upon April 1, 2011, as the earliest possible effective date of the MOD Reliability Standards. MISO argues that Order No. 729–A's acceleration of the Order No. 729 compliance deadline is unexpected, unnecessary, and likely to impose unreasonable burdens on responsible entities who planned for compliance no earlier than April 1, 2011. PJM also contends that it has expended resources in reliance upon an April 1, 2011, effective date and that an accelerated effective date creates a substantial hardship for PJM. Accordingly, these petitioners urge the Commission to grant rehearing and set April 1, 2011, as the effective date for the MOD Reliability Standards.

10. In support of their arguments, petitioners comment on how the effective dates for other requirements are linked to the implementation schedule of the MOD Reliability Standards. MISO, NorthWestern, SWAT and Westconnect state that Order No. 729 aligned the effective date of the MOD Reliability Standards with the effective date of the NAESB WEQ business practice standards Version 002.1. MISO and Northwestern also point out that, in Order No. 676–E, the Commission directed utilities to file a revised Attachment C to their Open Access Transmission Tariff (OATT) on or before 275 days after approval of the MOD Reliability Standards. These petitioners argue that the Commission's decision in Order No. 729–A to accelerate the implementation of the MOD Reliability Standards has disrupted the coordinated implementation of the NAESB business practice standards and the OATT Attachment C revisions.

11. In addition, MISO expresses concern about the Commission's statement in Order No. 729–A that transmission service providers within the United States who rely upon information and data from transmission service providers within Canadian provinces to comply with these Reliability Standards shall not be penalized solely for the failure of a utility located in another jurisdiction to provide such information and data, until such time that the MOD Reliability Standards become effective in that foreign jurisdiction. MISO expresses concerns that the last clause of this statement could be read to mean that once the standards have become mandatory in Canada, transmission operators within the United States could be subjected to penalties if the Canadian transmission operators fail, for whatever reason, to supply the information mandated by the Reliability Standards. Accordingly, MISO requests clarification that Order No. 729–A did not create automatic liability for transmission operators that comply with their own data requirements, but do not receive needed data from other transmission operators.

12. Finally, MISO requests that the Commission act expeditiously and issue an order on rehearing by July 1, 2010. MISO states that the compliance deadline under the Order No. 729–A framework, i.e., September 9, 2010, is rapidly approaching. MISO argues that expedited action will provide MISO and others with needed certainty and allow them to schedule their compliance efforts accordingly.

Commission Determination

13. Upon further consideration, the Commission has determined that the implementation schedule of the MOD Reliability Standards should be keyed to the date of approval of the Reliability Standards, as originally contemplated in Order No. 729, and not the date of publication of Order No. 729 in the **Federal Register**. Accordingly, the

[8] Order No. 729–A, 131 FERC ¶ 61,109 at P 7.

Commission grants rehearing of its determination in Order No. 729–A and directs that the MOD Reliability Standards shall become effective within the United States as of the first day of the first quarter occurring 365 days after their approval by the Commission, *i.e.,* April 1, 2011.

14. Thus, the Commission rejects arguments raised by Bonneville, LPPC, SWAT and WestConnect that the implementation of the MOD Reliability Standards should be delayed because the original implementation plan contemplated approval of all applicable regulatory authorities, including certain Canadian provinces, and those entities did not act within the same quarter as the Commission. It is unclear whether and when the Canadian provinces will act on these MOD Reliability Standards. This uncertainty is the reason why the Commission granted clarification in Order No. 729–A. Although the Commission appreciates that industry acted in reliance of the original implementation plan, we believe that the most reasonable clarification of the Commission's directive in Order No. 729 is to make the MOD Reliability Standards effective within the United States on the first day of the first quarter occurring 365 days following approval by the Commission, i.e., April 1, 2011.

15. When the Commission issued Order No. 676–E, it purposely set an implementation timeline for compliance with the NAESB business practice standards that was identical to the one prescribed in Order No. 729 for the related NERC reliability standards.[9] In this order and in Order No. 729–A, the Commission has modified the compliance schedule for the MOD Reliability Standards such that it no longer matches the compliance schedule for the WEQ Version 002.1 Business Practice Standards that the Commission incorporated by reference in Order No. 676–E. Thus, to maintain the consistency that the Commission determined was appropriate in Order Nos. 676–E and 729, we will modify the compliance deadline that we prescribed in Order No. 676–E to match the compliance deadline that we are prescribing for the MOD Reliability Standards within the continental United States.[10] Thus, the NAESB business practice standards shall become effective on the same date as the MOD Reliability Standards.

16. Consistent with our determination in Order No. 676–E, public utilities shall file any necessary tariff revisions, including any revisions to Attachment C of their OATT, at least ninety days before the prescribed date for compliance with the revised NAESB business practice standards.[11] Consistent with our prior practice, if a public utility fails to file the required tariff revisions prior to the compliance date, it nonetheless must abide by the NAESB Version 002.1 WEQ standards even before it has updated its tariff to incorporate these changes.

17. In response to MISO's request, the Commission clarifies that Order No. 729–A did not create automatic liability for transmission operators that comply with their own data requirements, but do not receive needed data from other transmission operators. The Commission intended, in Order No. 729–A, to clarify that to the extent transmission providers within the United States rely on information provided by transmission providers in other countries to complete their calculations of available transfer or flowgate capability, and the transmission providers in other countries do not provide sufficiently transparent information for the transmission providers within the United States to complete their implementation documents, the transmission operators within the United States would not violate the MOD Reliability Standards approved in Order No. 729 as a result of that lack of information from counterparts in other countries.

III. Information Collection Statement

18. The Office of Management and Budget (OMB) regulations require that OMB approve certain information collection requirements imposed by an agency.[12] The revisions to the information collection requirements for transmission service providers and transmission operators adopted in Order No. 729 were approved under OMB Control No. 1902–0244. This order clarifies these requirements in order to more clearly state the obligations imposed in Order No. 729, but does not substantively alter those requirements. OMB approval of this order is therefore unnecessary. However, the Commission will send a copy of this order to OMB for informational purposes only.

IV. Document Availability

19. In addition to publishing the full text of this document in the **Federal Register**, the Commission provides all interested persons an opportunity to view and/or print the contents of this document via the Internet through FERC's Home Page (*http://www.ferc.gov*) and in FERC's Public Reference Room during normal business hours (8:30 a.m. to 5 p.m. Eastern time) at 888 First Street, NE., Room 2A, Washington, DC 20426.

20. From FERC's Home Page on the Internet, this information is available on eLibrary. The full text of this document is available on eLibrary in PDF and Microsoft Word format for viewing, printing, and/or downloading. To access this document in eLibrary, type the docket number excluding the last three digits of this document in the docket number field.

21. User assistance is available for eLibrary and the FERC's Web site during normal business hours from FERC Online Support at (202) 502–6652 (toll free at 1–866–208–3676) or e-mail at *ferconlinesupport@ferc.gov,* or the Public Reference Room at (202) 502–8371, TTY (202) 502–8659. E-mail the Public Reference Room at *public.referenceroom@ferc.gov.*

V. Effective Date and Congressional Notification

22. Rehearings and clarifications adopted in this Order on Rehearing and Reconsideration will become effective August 23, 2010.

By the Commission. Commissioner LaFleur voting present.

Kimberly D. Bose,

Secretary.

[FR Doc. 2010–17735 Filed 7–22–10; 8:45 am]

BILLING CODE 6717–01–P

[9] *See* Order No. 676–E, FERC Stats. & Regs. ¶ 31,299 at P 126; Order No. 729 at P 95.

[10] In contrast to the compliance dates the Commission is establishing for the NERC MOD Reliability Standards, the compliance date for the WEQ Version 002.1 Business Practice Standards do not establish a separate compliance date for transactions outside of the continental United States.

[11] Order No. 676–E, FERC Stats. & Regs. ¶ 31,299 at P 128.

[12] 5 CFR 1320 (2010).

ENVIRONMENTAL PROTECTION AGENCY

40 CFR Part 52

[EPA–R06–OAR–2007–0210; FRL–9177–4]

Approval and Promulgation of Air Quality Implementation Plans; Texas; Revisions to Emissions Inventory Reporting Requirements and Conformity of General Federal Actions, Including Revisions Allowing Electronic Reporting Consistent With the Cross Media Electronic Reporting Rule

AGENCY: Environmental Protection Agency (EPA).

ACTION: Direct final rule.

SUMMARY: EPA is approving Texas State Implementation Plan (SIP) revisions that were submitted by the Governor of Texas and by the Texas Commission on Environmental Quality (TCEQ) respectively on December 17, 1999 and February 26, 2007. The revisions pertain to regulations on reporting air pollution emissions (emission inventories), and conformity of general federal actions to SIPs. The revisions on emissions inventories allow the state to collect additional data related to emissions from stationary sources and contain requirements for sources in regions that are in violation of a national ambient air quality standard (NAAQS) to report typical daily emissions of carbon monoxide and ozone precursor gases during the winter and summer months, respectively. The revisions also allow for electronic reporting of documents required under federally authorized programs and designated state programs, including emissions inventories from stationary sources. The revisions to regulations on conformity of general federal actions to SIPs are non-substantive. EPA is approving the revisions pursuant to Section 110, part D of the Federal Clean Air Act (CAA).

DATES: This rule is effective on September 21, 2010 without further notice, unless EPA receives relevant adverse comment by August 23, 2010. If EPA receives such comment, EPA will publish a timely withdrawal in the **Federal Register** informing the public that this rule will not take effect.

ADDRESSES: Submit your comments, identified by Docket No. EPA–R06–OAR–2007–0210, by one of the following methods:

- *Federal eRulemaking Portal: http://www.regulations.gov.* Follow the on-line instructions for submitting comments.
- *EPA Region 6 "Contact Us" Web site: http://epa.gov/region6/r6coment.htm.* Please click on "6PD" (Multimedia) and select "Air" before submitting comments.
- *E-mail:* Mr. Guy Donaldson at *Donaldson.guy@epa.gov.* Please also send a copy by e-mail to the person listed in the **FOR FURTHER INFORMATION CONTACT** section below.
- *Fax:* Mr. Guy Donaldson, Chief, Air Planning Section (6PD–L), at fax number 214–665–7263.
- *Mail:* Mr. Guy Donaldson, Chief, Air Planning Section (6PD–L), Environmental Protection Agency, 1445 Ross Avenue, Suite 1200, Dallas, Texas 75202–2733.
- *Hand or Courier Delivery:* Mr. Guy Donaldson, Chief, Air Planning Section (6PD–L), Environmental Protection Agency, 1445 Ross Avenue, Suite 1200, Dallas, Texas 75202–2733. Such deliveries are accepted only between the hours of 8 a.m. and 4 p.m. weekdays except for legal holidays. Special arrangements should be made for deliveries of boxed information.

Instructions: Direct your comments to Docket ID No. EPA–R06–OAR–2007–0210. EPA's policy is that all comments received will be included in the public docket without change and may be made available online at *http://www.regulations.gov,* including any personal information provided, unless the comment includes information claimed to be Confidential Business Information (CBI) or other information whose disclosure is restricted by statute. Do not submit information that you consider to be CBI or otherwise protected through *http://www.regulations.gov* or e-mail. The *http://www.regulations.gov* Web site is an "anonymous access" system, which means EPA will not know your identity or contact information unless you provide it in the body of your comment. If you send an e-mail comment directly to EPA without going through *http://www.regulations.gov* your e-mail address will be automatically captured and included as part of the comment that is placed in the public docket and made available on the Internet. If you submit an electronic comment, EPA recommends that you include your name and other contact information in the body of your comment and with any disk or CD–ROM you submit. If EPA cannot read your comment due to technical difficulties and cannot contact you for clarification, EPA may not be able to consider your comment. Electronic files should avoid the use of special characters, any form of encryption, and be free of any defects or viruses.

Docket: All documents in the docket are listed in the *www.regulations.gov* index. Although listed in the index, some information is not publicly available, *e.g.,* CBI or other information whose disclosure is restricted by statute. Certain other material, such as copyrighted material, will be publicly available only in hard copy. Publicly available docket materials are available either electronically in *www.regulations.gov* or in hard copy at the Air Planning Section (6PD–L), Environmental Protection Agency, 1445 Ross Avenue, Suite 700, Dallas, Texas 75202–2733. The file will be made available by appointment for public inspection in the Region 6 FOIA Review Room between the hours of 8:30 a.m. and 4:30 p.m. weekdays except for legal holidays. Contact the person listed in the **FOR FURTHER INFORMATION CONTACT** paragraph below or Mr. Bill Deese at 214–665–7253 to make an appointment. If possible, please make the appointment at least two working days in advance of your visit. There will be a 15 cent per page fee for making photocopies of documents. On the day of the visit, please check in at the EPA Region 6 reception area at 1445 Ross Avenue, Suite 700, Dallas, Texas.

The State submittal is also available for public inspection at the State Air Agency listed below during official business hours by appointment: Texas Commission on Environmental Quality, Office of Air Quality, 12124 Park 35 Circle, Austin, Texas 78753.

FOR FURTHER INFORMATION CONTACT: Emad Shahin, Air Planning Section (6PD–L), Environmental Protection Agency, Region 6, 1445 Ross Avenue, Suite 700, Dallas, Texas 75202–2733, telephone 214–665–6717; fax number 214–665–7263; e-mail address *shahin.emad@epa.gov.*

SUPPLEMENTARY INFORMATION: Throughout this document, whenever "we", "us", or "our" is used, we mean the EPA.

Outline

I. What action is EPA taking?
II. What is a SIP?
III. What is the background for this action?
IV. What is EPA's evaluation of the revision?
V. Statutory and Executive Order Reviews

I. What action is EPA taking?

EPA is approving revisions to the Texas SIP that pertain to regulations on reporting of emissions (emissions inventories) submitted by stationary sources of air pollutants and conformity of general Federal actions to SIPs. Revisions were adopted by the State of Texas on December 1, 1999, and submitted to EPA Region 6 on December 17, 1999. Additional revisions to the emissions inventory regulations were adopted on February 7, 2007, and submitted to EPA on February 26, 2007. Specifically we are approving:

- Revisions to 30 TAC 101.10 Emissions Inventory Requirements, submitted December 1999;
- Revisions to 30 TAC 101.30, Conformity of General Federal Actions to State Implementation Plans submitted December 1999; and
- The creation of Chapter 19, Electronic Reporting (30 TAC 19) submitted February 2007.

This approval does not address the revision of 30 TAC 101.1 (Definitions) and adding of 30 TAC 101.28 (Stringency Determination for Federal Operating Permits) which were submitted on December 17, 1999. The revisions to section 101.1 were later

superceded by revisions adopted by Texas on September 26, 2001, and approved by EPA on November 14, 2001 (66 FR 57252). Because the December 17, 1999, revisions 101.1 were superceded by the 2001 submission which has already been approved, no action or review is needed here. EPA intends to take action on 30 TAC 101.28 at a later time. A more complete description of the revisions is available in the Technical Support Document (TSD) posted on *www.regulations.gov.*

We are approving the revisions pursuant to Section 110, part D of the CAA. The reporting of additional emissions and emissions-related data will help to achieve and continue to maintain the NAAQS in Texas. Regulated entities that submit emissions inventories will be allowed to do so electronically. Approving these revisions and the administrative changes to the general conformity rule will make the federal SIP consistent with the state's rules.

We are also making a ministerial correction to the table in 40 CFR 52.2270(c) to reflect the correct title of the EPA approved regulation in the Texas SIP. The ministerial correction applies to the table entry for Section 101.30, which should be titled "Conformity of General Federal Actions to State Implementation Plans".

EPA is publishing this rule without prior proposal because we view this as a non-controversial amendment and anticipate no adverse comments. However, in the proposed rules section of this **Federal Register** publication, we are publishing a separate document that will serve as the proposal to approve the SIP revision if relevant adverse comments are received. This rule will be effective on September 21, 2010 without further notice unless we receive relevant adverse comment by August 23, 2010. If we receive relevant adverse comments, we will publish a timely withdrawal in the **Federal Register** informing the public that the rule will not take effect. We will address all public comments in a subsequent final rule based on the proposed rule. We will not institute a second comment period on this action. Any parties interested in commenting must do so now. Please note that if we receive adverse comment on an amendment, paragraph, or section of this rule and if that provision may be severed from the remainder of the rule, we may adopt as final those provisions of the rule that are not the subject of an adverse comment.

II. What is a SIP?

Section 110 of the CAA requires states to develop air pollution regulations and control strategies to ensure that air quality meets the national ambient air quality standards (NAAQS) established by EPA. NAAQS are established under section 109 of the CAA and currently address six criteria pollutants: Carbon monoxide (CO), nitrogen dioxide, ozone, lead (Pb), particulate matter (PM), and sulfur dioxide (SO_2).

A SIP is a set of air pollution regulations, control strategies, other means or techniques, and technical analyses developed by the state, to ensure that the state meets the NAAQS. It is required by section 110 and other provisions of the CAA. A SIP protects air quality primarily by addressing air pollution at its point of origin. A SIP can be extensive, containing state regulations or other enforceable documents, and supporting information such as emissions inventories, monitoring networks, and modeling demonstrations. Each state must submit regulations and control strategies to EPA for approval and incorporation into the federally-enforceable SIP.

III. What is the background for this action?

On December 17, 1999, the Governor of Texas submitted rules for inclusion into the SIP which amended regulations on emissions inventories submitted by stationary sources of air pollutants and conformity of general Federal actions to SIPs. The revisions to 30 TAC 101.10, emissions inventory requirements: (1) Allow the state to collect additional data related to emissions from stationary sources, (2) contain requirements for sources in regions that are in violation of a NAAQS to report typical daily emissions of carbon monoxide and ozone precursor gases during the winter and summer months, respectively, (3) delete a requirement to report allowable emissions in the emissions inventory report, (4) add a requirement for facilities to report actual emissions for the statewide annual inventory update if a change in operating conditions results in a change from the most recently submitted emissions data of at least 5 tons per year in total annual emissions of volatile organic compounds, NO_X, CO, SO_2, Pb, or PM, (5) require submission of calculations representative of emission producing processes where continuous emission monitoring system data is not available, and (6) remove obsolete language that referred to inventory requirements due in 1992 and 1993.

The revisions to the regulation on conformity of general federal actions to SIPs, (30 TAC 101.30), are non-substantive changes. Definitions in the regulation were moved to another part of the Texas Administrative Code (30 TAC 101.1, Definitions) or were deleted if they were already part of the Code.

On October 13, 2005 EPA published the final Cross Media Electronic Reporting Rule (CROMERR) in the **Federal Register**, (70 FR 59848). CROMERR establishes electronic reporting as an acceptable regulatory alternative to paper reporting and establishes requirements to assure that electronic documents are as legally dependable as their paper counterparts. Subpart D of the CROMERR requires states, tribal or local government agencies that receive or wish to receive electronic reports under their EPA-authorized programs to apply to EPA for a revision to those programs and get EPA's approval. On February 26, 2007 Texas submitted to EPA revisions to the emissions inventory reporting regulations. The revisions allow for electronic reporting of emissions consistent with CROMERR.

On October 14, 2008, the Texas Commission on Environmental Quality (TCEQ) submitted two applications to EPA for approval under CROMERR; one for their Net Discharge Monitoring Report (NetDMR) and the second, for the State of Texas Environmental Electronic Reporting System (STEERS) electronic document receiving systems for revision or modification of multiple authorized programs under 40 CFR parts 51, 60, 63, 70, 123, 142, 233–404, 271, 281, and 403. EPA approved the applications and published a **Federal Register** notice on April 27, 2009 (74 FR 19082) to allow electronic reporting for specific authorized programs under Title 40.

IV. What is EPA's evaluation of the revision?

EPA has evaluated the state's submittals that pertain to (1) Reporting of emissions and emission-related data by stationary sources of air pollutants, (2) conformity of general Federal actions to SIPs, and (3) allowing electronic reporting into Texas' SIP, and have determined that they meet the applicable requirements of the CAA and EPA air quality regulations because they are consistent with EPA's requirements for emissions reporting, conformity, and electronic reporting. (For further information on our evaluation see the TSD for this action). This approval will make these revised regulations federally enforceable. Enforcement of the regulations in a state SIP before and after it is incorporated into the federally approved SIP is primarily a state responsibility. However, after the regulations are federally approved, we are authorized to take enforcement

action against violators. Citizens are also offered legal recourse to address violations as described in Section 304 of the CAA. Approval will also help make the federally approved SIP consistent with state regulations.

For additional information on our evaluation please refer to the Technical Support Document found in the electronic docket.

V. Statutory and Executive Order Reviews

Under the Clean Air Act, the Administrator is required to approve a SIP submission that complies with the provisions of the Act and applicable Federal regulations. 42 U.S.C. 7410(k); 40 CFR 52.02(a). Thus, in reviewing SIP submissions, EPA's role is to approve state choices, provided that they meet the criteria of the Clean Air Act. Accordingly, this action merely approves state law as meeting Federal requirements and does not impose additional requirements beyond those imposed by state law. For that reason, this action:

- Is not a "significant regulatory action" subject to review by the Office of Management and Budget under Executive Order 12866 (58 FR 51735, October 4, 1993);
- Does not impose an information collection burden under the provisions of the Paperwork Reduction Act (44 U.S.C. 3501 *et seq.*);
- Is certified as not having a significant economic impact on a substantial number of small entities under the Regulatory Flexibility Act (5 U.S.C. 601 *et seq.*);
- Does not contain any unfunded mandate or significantly or uniquely affect small governments, as described in the Unfunded Mandates Reform Act of 1995 (Pub. L. 104–4);
- Does not have Federalism implications as specified in Executive Order 13132 (64 FR 43255, August 10, 1999);
- Is not an economically significant regulatory action based on health or safety risks subject to Executive Order 13045 (62 FR 19885, April 23, 1997);
- Is not a significant regulatory action subject to Executive Order 13211 (66 FR 28355, May 22, 2001);
- Is not subject to requirements of Section 12(d) of the National Technology Transfer and Advancement Act of 1995 (15 U.S.C. 272 note) because application of those requirements would be inconsistent with the Clean Air Act; and
- Does not provide EPA with the discretionary authority to address, as appropriate, disproportionate human health or environmental effects, using practicable and legally permissible methods, under Executive Order 12898 (59 FR 7629, February 16, 1994).

In addition, this rule does not have tribal implications as specified by Executive Order 13175 (65 FR 67249, November 9, 2000), because the SIP is not approved to apply in Indian country located in the state, and EPA notes that it will not impose substantial direct costs on tribal governments or preempt tribal law.

The Congressional Review Act, 5 U.S.C. 801 *et seq.,* as added by the Small Business Regulatory Enforcement Fairness Act of 1996, generally provides that before a rule may take effect, the agency promulgating the rule must submit a rule report, which includes a copy of the rule, to each House of the Congress and to the Comptroller General of the United States. EPA will submit a report containing this action and other required information to the U.S. Senate, the U.S. House of Representatives, and the Comptroller General of the United States prior to publication of the rule in the **Federal Register**. A major rule cannot take effect until 60 days after it is published in the **Federal Register**. This action is not a "major rule" as defined by 5 U.S.C. 804(2).

Under section 307(b)(1) of the Clean Air Act, petitions for judicial review of this action must be filed in the United States Court of Appeals for the appropriate circuit by September 21, 2010. Filing a petition for reconsideration by the Administrator of this final rule does not affect the finality of this action for the purposes of judicial review nor does it extend the time within which a petition for judicial review may be filed, and shall not postpone the effectiveness of such rule or action. This action may not be challenged later in proceedings to enforce its requirements. (*See* section 307(b)(2).)

List of Subjects in 40 CFR Part 52

Environmental protection, Air pollution control, Incorporation by reference, Intergovernmental relations, Ozone, Reporting and recordkeeping requirements, Volatile organic compounds.

Dated: July 12, 2010.

Al Armendariz,

Regional Administrator, Region 6.

■ 40 CFR part 52 is amended as follows:

PART 52—[AMENDED]

■ 1. The authority citation for part 52 continues to read as follows:

Authority: 42 U.S.C. 7401 *et seq.*

Subpart SS—Texas

■ 2. The first table in § 52.2270(c) titled "EPA Approved Texas Regulations" is amended by:

■ a. Immediately before the heading "Chapter 101—General Air Quality Rules" adding a new centered heading in numerical order for "Chapter 19—Electronic Reporting"; followed by a centered heading for "Subchapter A—General Provisions"; followed by entries for Sections 19.1 and 19.3; followed by a centered heading for "Subchapter B—Electronic Reporting Requirements"; followed by entries for sections 19.10, 19.12, and 19.14.

■ b. Revising the entries for Sections 101.10 and 101.30 under "Chapter 101—General Air Quality Rules".

The additions and revisions read as follows:

§ 52.2270 Identification of plan.

* * * * *

(c) * * *

EPA APPROVED REGULATIONS IN THE TEXAS SIP

State citation	Title/subject	State approval/submittal date	EPA approval date	Explanation
Chapter 19—Electronic Reporting Subchapter A—General Provisions				
Section 19.1	Definitions	2/7/2007	July 23, 2010 [Insert *FR* page number where document begins.	
Section 19.3	Applicability	2/7/2007	July 23, 2010 [Insert *FR* page number where document begins.	

EPA APPROVED REGULATIONS IN THE TEXAS SIP—Continued

State citation	Title/subject	State approval/submittal date	EPA approval date	Explanation
Subchapter B—Electronic Reporting Requirements				
Section 19.10	Use of Electronic Document Receiving System.	2/7/2007	July 23, 2010 [Insert *FR* page number where document begins.	
Section 19.12	Authorized Electronic Signature	2/7/2007	July 23, 2010 [Insert *FR* page number where document begins.	
Section 19.14	Enforcement	2/7/2007	July 23, 2010 [Insert *FR* page number where document begins.	
Chapter 101—General Air Quality Rules Subchapter A—General Rules				
*	*	*	*	*
Section 101.10	Emissions Inventory Requirements	12/1/1999	July 23, 2010 [Insert *FR* page number where document begins.	
*	*	*	*	*
Section 101.30	Conformity of General Federal Actions to State Implementation Plans.	12/1/1999	July 23, 2010 [Insert *FR* page number where document begins.	
*	*	*	*	*

[FR Doc. 2010–17975 Filed 7–22–10; 8:45 am]

BILLING CODE 6560–50–P

ENVIRONMENTAL PROTECTION AGENCY

40 CFR Part 52

[EPA–R02–OAR–2009–0462, FRL–9178–5]

Approval and Promulgation of Implementation Plans; New York Reasonably Available Control Technology and Reasonably Available Control Measures

AGENCY: Environmental Protection Agency (EPA).

ACTION: Final rule.

SUMMARY: EPA is conditionally approving the reasonably available control technology requirement which applies to the entire State of New York, including the New York portion of the New York-Northern New Jersey-Long Island, NY-NJ-CT and the Poughkeepsie 8-hour ozone moderate nonattainment areas. In addition, EPA is conditionally approving the reasonably available control measure analysis which applies to the New York portion of the New York-Northern New Jersey-Long Island, NY-NJ-CT 8-hour ozone moderate nonattainment area.

DATES: *Effective Date:* This rule is effective on August 23, 2010.

ADDRESSES: EPA has established a docket for this action under Docket ID No. EPA–R02–OAR–2009–0462. All documents in the docket are listed on the *http://www.regulations.gov* Web site. Although listed in the index, some information is not publicly available, *e.g.,* CBI or other information whose disclosure is restricted by statute. Certain other material, such as copyrighted material, is not placed on the Internet and will be publicly available only in hard copy form. Publicly available docket materials are available either electronically through *http://www.regulations.gov* or in hard copy at the Environmental Protection Agency, Region II Office, Air Programs Branch, 290 Broadway, 25th Floor, New York, New York 10007–1866. This Docket Facility is open from 8:30 a.m. to 4:30 p.m., Monday through Friday, excluding legal holidays. The Docket telephone number is 212–637–4249.

FOR FURTHER INFORMATION CONTACT: Kirk Wieber (*wieber.kirk@epa.gov*), Air Programs Branch, Environmental Protection Agency, 290 Broadway, 25th Floor, New York, New York 10007–1866, (212) 637–4249.

SUPPLEMENTARY INFORMATION:

Table of Contents

I. What comments did EPA receive in response to its proposal and what action is EPA taking in this final rule?
II. What was included in New York's SIP submittals?
III. What is the rationale for this approval action?
IV. What are EPA's conclusions?
V. What are the consequences if a final conditional approval is converted to a disapproval?
VI. Statutory and Executive Order Reviews

I. What comments did EPA receive in response to its proposal and what action is EPA taking in this final rule?

On May 4, 2010 (75 FR 23640) the Environmental Protection Agency (EPA) proposed to conditionally approve New York's reasonably available control measure (RACM) analysis and New York's efforts to meet the reasonably available control technology (RACT) requirement. The reader is referred to that rulemaking action for a more detailed discussion of New York's RACT and RACM plans. EPA received no comments in response to the May 4, 2010 proposal. Therefore, in this action, EPA is conditionally approving New York's RACT and RACM plans.

II. What was included in New York's SIP submittals?

On September 1, 2006, New York submitted its State-wide 8-hour ozone RACT SIP, which included a determination that many of the RACT rules currently contained in its SIP meet the RACT obligation for the 8-hour standard. On February 8, 2008, New York submitted two comprehensive 8-hour ozone SIPs—one for the New York portion of the New York-Northern New Jersey-Long Island, NY-NJ-CT nonattainment area, entitled, "New York SIP for Ozone—Attainment Demonstration for New York Metro Area" and one for the Poughkeepsie nonattainment area, entitled, "New York SIP for Ozone—Attainment Demonstration for Poughkeepsie, NY Area." The submittals included the 2002 base year emissions inventory,

projection year emissions, attainment demonstrations, Reasonable Further Progress (RFP) plans, RACT analysis, RACM analysis, contingency measures, new source review and on-road motor vehicle emission budgets. These proposed SIP revisions were subject to notice and comment by the public and the State addressed the comments received on the proposed SIP revisions before adopting the plans and submitting them for EPA review and rulemaking action.

Included in New York's February 8, 2008 8-hour Ozone SIP submittal was a list of additional control measures identified by the State as RACT and RACM. The State committed to adopt additional control measures applicable to the following source categories: Adhesives and Sealants, Consumer Products, Portable Fuel Containers, Graphic Arts, Asphalt Formulation, Asphalt Paving Production, Portland Cement Plants, Glass Manufacturing, and NOx RACT.

Of the source categories identified by New York, the State adopted rules for Portable Fuel Containers on July 15, 2009, and for Consumer Products on September 30, 2009. New York submitted the Consumer Products rule (on October 21, 2009) and the Portable Fuel Container rule (on November 23, 2009) to EPA, for review and approval into the SIP. On May 28, 2010 (75 FR 29897), EPA approved New York's Consumer Products and Portable Fuel Container rules.

On April 15, 2010, New York submitted a letter committing to adopt the necessary control measures that will satisfy the RACT and RACM requirement by August 31, 2010, which is no more than one year from our final action on the RACT and RACM SIP submittals.

III. What is the rationale for this approval action?

On August 25, 2009 (74 FR 42813), EPA proposed to disapprove New York's RACT and RACM plans. In that proposed rulemaking action, EPA made suggestions for how New York could correct the identified deficiencies and strengthen the 8-hour ozone SIP (see 74 FR 42819). As discussed in Section II, New York adopted and submitted for inclusion in the SIP two of the control measures it had adopted. On December 23, 2009, New York proposed adoption of all but one of the remaining additional control measures that it committed to adopt as satisfying the RACT and RACM requirement. On April 21, 2010, New York proposed adoption of that one remaining control measure. Based on this recent progress and on New York's April 15, 2010 letter committing to submit adopted RACT/RACM rules by August 31, 2010, EPA proposed a conditional approval of the RACT and RACM SIPs for the 8-hour ozone NAAQS on May 4, 2010. EPA has determined that New York should be able to meet this commitment because the State has already adopted rules for two of the source categories and proposed RACT/RACM provisions for all of the remaining source categories.

IV. What are EPA's conclusions?

EPA is conditionally approving the moderate area RACM analysis for the New York portion of the New York-Northern New Jersey-Long Island, NY-NJ-CT 8-hour ozone moderate nonattainment area as presented in the February 8, 2008 "New York SIP for Ozone—Attainment Demonstration for New York Metro Area" SIP submittal.

EPA is also conditionally approving the September 1, 2006 New York RACT analysis SIP submittal, supplemented on February 8, 2008 and September 16, 2008, which applies to the entire State and to the New York portion of the New York-Northern New Jersey-Long Island, NY-NJ-CT and the Poughkeepsie 8-hour ozone moderate nonattainment areas.

EPA is conditionally approving the RACT and RACM analyses for the 8-hour ozone NAAQS based on New York's letter committing to submit adopted RACT/RACM rules for several source categories by August 31, 2010. EPA has determined that New York should be able to meet this commitment because the State has already adopted rules for two of the source categories and proposed RACT/RACM provisions for all of the remaining source categories.

Under section 110(k)(4) of the Act, EPA may conditionally approve a plan based on a commitment from the State to adopt specific enforceable measures by a date certain, but not later than 1 year from the date of approval. If EPA conditionally approves the commitment in a final rulemaking action, the State must meet its commitment to adopt the identified regulations. If the State fails to do so, this action will become a disapproval upon the State's failure to meet its commitment. EPA will notify the State by letter that this action has occurred. If the conditional approval converts to a disapproval, the commitment will no longer be a part of the approved New York SIP. Upon notification to the State that the conditional approval has converted to a disapproval, EPA will publish a notice in the **Federal Register** notifying the public that the conditional approval automatically converted to a disapproval. If EPA disapproves the RACT and RACM SIP submittals, such action will start a sanctions and FIP clock (see section V). If the State meets its commitment, within the applicable time frame, the conditionally approved submission will remain a part of the SIP until EPA takes final action approving or disapproving the RACT and RACM submittals. If EPA approves the submittals, the RACT and RACM analyses will be fully approved into the SIP in their entirety.

V. What are the consequences if a final conditional approval is converted to a disapproval?

The Act provides for the imposition of sanctions and the promulgation of a Federal Implementation Plan (FIP) if States fail to correct any deficiencies identified by EPA in a final disapproval action within certain timeframes.

A. What are the Act's provisions for sanctions?

If EPA disapproves a required SIP submittal or component of a SIP submittal, section 179(a) provides for the imposition of sanctions unless the deficiency is corrected within 18 months of the final rulemaking of disapproval. The first sanction would apply 18 months after EPA disapproves the SIP submittal if a State fails to make the required submittal. Under EPA's sanctions regulations, 40 CFR 52.31, the first sanction would be 2:1 offsets for sources subject to the new source review requirements under section 173 of the Act. If the State has still failed to submit a SIP for which EPA proposes full or conditional approval 6 months after the first sanction is imposed, the second sanction will apply. The second sanction is a limitation on the receipt of Federal highway funds. EPA also has authority under section 110(m) to sanction a broader area.

B. What Federal implementation plan provisions apply if a state fails to submit an approvable plan?

In addition to sanctions, if EPA finds that a State failed to submit the required SIP revision or disapproves the required SIP revision, or a portion thereof, EPA must promulgate a FIP no later than 2 years from the date of the finding if the deficiency has not been corrected.

VI. Statutory and Executive Order Reviews

A. Executive Order 12866, Regulatory Planning and Review

This action is not a "significant regulatory action" under the terms of Executive Order (EO) 12866 (58 FR

51735, October 4, 1993) and is therefore not subject to review under the EO.

B. Paperwork Reduction Act

This action does not impose an information collection burden under the provisions of the Paperwork Reduction Act, 44 U.S.C. 3501 *et seq.,* because this SIP conditional approval under section 110 and subchapter I, part D of the Clean Air Act will not in-and-of itself create any new information collection burdens but simply conditionally approves certain State requirements for inclusion into the SIP. Burden is defined at 5 CFR 1320.3(b).

C. Regulatory Flexibility Act

The Regulatory Flexibility Act (RFA) generally requires an agency to conduct a regulatory flexibility analysis of any rule subject to notice and comment rulemaking requirements unless the agency certifies that the rule will not have a significant economic impact on a substantial number of small entities. Small entities include small businesses, small not-for-profit enterprises, and small governmental jurisdictions. For purposes of assessing the impacts of today's rule on small entities, small entity is defined as: (1) A small business as defined by the Small Business Administration's (SBA) regulations at 13 CFR 121.201; (2) a small governmental jurisdiction that is a government of a city, county, town, school district or special district with a population of less than 50,000; and (3) a small organization that is any not-for-profit enterprise which is independently owned and operated and is not dominant in its field.

After considering the economic impacts of today's final rule on small entities, I certify that this action will not have a significant impact on a substantial number of small entities. This rule does not impose any requirements or create impacts on small entities. This SIP conditional approval under section 110 and subchapter I, part D of the Clean Air Act will not in-and-of itself create any new requirements but simply disapproves certain State requirements for inclusion into the SIP. Accordingly, it affords no opportunity for EPA to fashion for small entities less burdensome compliance or reporting requirements or timetables or exemptions from all or part of the rule. The fact that the Clean Air Act prescribes that various consequences (*e.g.,* higher offset requirements) may or will flow from this conditional approval does not mean that EPA either can or must conduct a regulatory flexibility analysis for this action. Therefore, this action will not have a significant economic impact on a substantial number of small entities.

We continue to be interested in the potential impacts of this final rule on small entities and welcome comments on issues related to such impacts.

D. Unfunded Mandates Reform Act

This action contains no Federal mandates under the provisions of Title II of the Unfunded Mandates Reform Act of 1995 (UMRA), 2 U.S.C. 1531–1538 for State, local, or Tribal governments or the private sector. EPA has determined that the final conditional approval action does not include a Federal mandate that may result in estimated costs of $100 million or more to either State, local, or Tribal governments in the aggregate, or to the private sector. This action conditionally approves pre-existing requirements under State or local law, and imposes no new requirements. Accordingly, no additional costs to State, local, or Tribal governments, or to the private sector, result from this action.

E. Executive Order 13132, Federalism

Executive Order 13132, entitled "Federalism" (64 FR 43255, August 10, 1999), requires EPA to develop an accountable process to ensure "meaningful and timely input by State and local officials in the development of regulatory policies that have federalism implications." "Policies that have federalism implications" is defined in the Executive Order to include regulations that have "substantial direct effects on the States, on the relationship between the national government and the States, or on the distribution of power and responsibilities among the various levels of government."

This action does not have federalism implications. It will not have substantial direct effects on the States, on the relationship between the national government and the States, or on the distribution of power and responsibilities among the various levels of government, as specified in Executive Order 13132, because it merely conditionally approves certain State requirements for inclusion into the SIP and does not alter the relationship or the distribution of power and responsibilities established in the Clean Air Act. Thus, Executive Order 13132 does not apply to this action.

F. Executive Order 13175, Coordination With Indian Tribal Governments

This action does not have Tribal implications, as specified in Executive Order 13175 (65 FR 67249, November 9, 2000), because the SIP EPA is conditionally approving would not apply in Indian country located in the State, and EPA notes that it will not impose substantial direct costs on Tribal governments or preempt Tribal law. Thus, Executive Order 13175 does not apply to this action.

G. Executive Order 13045, Protection of Children From Environmental Health Risks and Safety Risks

EPA interprets EO 13045 (62 FR 19885, April 23, 1997) as applying only to those regulatory actions that concern health or safety risks, such that the analysis required under section 5–501 of the EO has the potential to influence the regulation. This action is not subject to EO 13045 because it is not an economically significant regulatory action based on health or safety risks subject to Executive Order 13045 (62 FR 19885, April 23, 1997). This SIP conditional approval under section 110 and subchapter I, part D of the Clean Air Act will not in-and-of itself create any new regulations but simply conditionally approves certain State requirements for inclusion into the SIP.

H. Executive Order 13211, Actions That Significantly Affect Energy Supply, Distribution, or Use

This final rule is not subject to Executive Order 13211 (66 FR 28355, May 22, 2001) because it is not a significant regulatory action under Executive Order 12866.

I. National Technology Transfer and Advancement Act

Section 12(d) of the National Technology Transfer and Advancement Act of 1995 ("NTTAA"), Public Law No. 104–113, 12(d) (15 U.S.C. 272 note) directs EPA to use voluntary consensus standards in its regulatory activities unless to do so would be inconsistent with applicable law or otherwise impractical. Voluntary consensus standards are technical standards (*e.g.,* materials specifications, test methods, sampling procedures, and business practices) that are developed or adopted by voluntary consensus standards bodies. NTTAA directs EPA to provide Congress, through OMB, explanations when the Agency decides not to use available and applicable voluntary consensus standards.

The EPA believes this action is not subject to requirements of Section 12(d) of NTTAA because application of those requirements would be inconsistent with the Clean Air Act.

J. Executive Order 12898: Federal Actions To Address Environmental Justice in Minority Populations and Low-Income Populations

Executive Order (EO) 12898 (59 FR 7629 (Feb. 16, 1994)) establishes Federal executive policy on environmental justice. Its main provision directs Federal agencies, to the greatest extent practicable and permitted by law, to make environmental justice part of their mission by identifying and addressing, as appropriate, disproportionately high and adverse human health or environmental effects of their programs, policies, and activities on minority populations and low-income populations in the United States.

EPA lacks the discretionary authority to address environmental justice in this final action. In reviewing SIP submissions, EPA's role is to approve or disapprove State choices, based on the criteria of the Clean Air Act. Accordingly, this action merely conditionally approves certain State requirements for inclusion into the SIP under section 110 and subchapter I, part D of the Clean Air Act and will not in-and-of itself create any new requirements. Accordingly, it does not provide EPA with the discretionary authority to address, as appropriate, disproportionate human health or environmental effects, using practicable and legally permissible methods, under Executive Order 12898.

K. Congressional Review Act

The Congressional Review Act, 5 U.S.C. 801 *et seq.,* as added by the Small Business Regulatory Enforcement Fairness Act of 1996, generally provides that before a rule may take effect, the agency promulgating the rule must submit a rule report, which includes a copy of the rule, to each House of the Congress and to the Comptroller General of the United States. EPA will submit a report containing this action and other required information to the U.S. Senate, the U.S. House of Representatives, and the Comptroller General of the United States prior to publication of the rule in the **Federal Register**. A major rule cannot take effect until 60 days after it is published in the **Federal Register**. This action is not a "major rule" as defined by 5 U.S.C. 804(2).

L. Petitions for Judicial Review

Under section 307(b)(1) of the Clean Air Act, petitions for judicial review of this action must be filed in the United States Court of Appeals for the appropriate circuit by September 21, 2010. Filing a petition for reconsideration by the Administrator of this final rule does not affect the finality of this action for the purposes of judicial review nor does it extend the time within which a petition for judicial review may be filed, and shall not postpone the effectiveness of such rule or action. This action may not be challenged later in proceedings to enforce its requirements. (*See* section 307(b)(2).)

List of Subjects in 40 CFR Part 52

Environmental protection, Air pollution control, Incorporation by reference, Intergovernmental relations, Ozone, Reporting and recordkeeping requirements, Volatile organic compounds.

Dated: July 13, 2010.

Judith A. Enck,

Regional Administrator, Region 2.

■ Part 52, chapter I, title 40 of the Code of Federal Regulations is amended as follows:

PART 52—[AMENDED]

■ 1. The authority citation for part 52 continues to read as follows:

Authority: 42 U.S.C. 7401 *et seq.*

Subpart HH—New York

■ 2. Section 52.1683 is amended by adding new paragraph (k) to read as follows:

52.1683 Control strategy: Ozone.

* * * * *

(k)(1) The September 1, 2006 New York reasonably available control technology (RACT) analysis plan submittal, supplemented on February 8, 2008 and September 16, 2008, which applies to the entire State and to the New York portion of the New York-Northern New Jersey-Long Island, NY-NJ-CT and the Poughkeepsie 8-hour ozone moderate nonattainment areas is conditionally approved.

(2) The moderate area reasonably available control measure (RACM) analysis for the New York portion of the New York-Northern New Jersey-Long Island, NY-NJ-CT 8-hour ozone moderate nonattainment area as presented in the February 8, 2008 "New York SIP for Ozone—Attainment Demonstration for New York Metro Area" submittal is conditionally approved.

[FR Doc. 2010–18074 Filed 7–22–10; 8:45 am]

BILLING CODE 6560–50–P

ENVIRONMENTAL PROTECTION AGENCY

40 CFR Part 81

[EPA–R03–OAR–2010–0431; FRL–9179–1]

Approval of One-Year Extension for Attaining the 1997 8-Hour Ozone Standard in the Baltimore Moderate Nonattainment Area

AGENCY: Environmental Protection Agency (EPA).

ACTION: Direct final rule.

SUMMARY: EPA is taking direct final action to extend the attainment date from June 15, 2010 to June 15, 2011 for the Baltimore nonattainment area, which is classified as moderate for the 1997 8-hour ozone national ambient air quality standard (NAAQS). This extension is based in part on air quality data for the 4th highest daily 8-hour monitored value during the 2009 ozone season. Accordingly, EPA is revising the table in our regulations concerning the 8-hour ozone attainment dates in the State of Maryland. EPA is approving the extension of the attainment date for the Baltimore moderate ozone nonattainment area in accordance with the requirements of the Clean Air Act (CAA).

DATES: *Effective Date:* This rule is effective on September 21, 2010 without further notice, unless EPA receives adverse written comment by August 23, 2010. If EPA receives such comments, it will publish a timely withdrawal of the direct final rule in the **Federal Register** and inform the public that the rule will not take effect.

ADDRESSES: EPA has established a docket for this action under Docket ID Number EPA–R03–OAR–2010–0431. All documents in the docket are listed in the *http://www.regulations.gov* Web site. Although listed in the electronic docket, some information is not publicly available, *i.e.,* confidential business information (CBI) or other information whose disclosure is restricted by statute. Certain other material, such as copyrighted material, is not placed on the Internet and will be publicly available only in hard copy form. Publicly available docket materials are available either electronically through *http://www.regulations.gov* or in hard copy for public inspection during normal business hours at the Air Protection Division, U.S. Environmental Protection Agency, Region III, 1650 Arch Street, Philadelphia, Pennsylvania 19103. Copies of the State submittal are available at Maryland Department of the Environment, 1800 Washington

Boulevard, Suite 705, Baltimore, Maryland 21230.

FOR FURTHER INFORMATION CONTACT: Gregory Becoat, (215) 814–2036, or by e-mail at *becoat.gregory@epa.gov.*

SUPPLEMENTARY INFORMATION:

I. Request for Attainment Date Extension for the Baltimore Nonattainment Area

On March 12, 2010, the State of Maryland requested a one-year attainment date extension for the Baltimore nonattainment area which is classified as moderate for the 1997 8-hour ozone NAAQS. The Baltimore nonattainment area consists of Anne Arundel, Baltimore, Carroll, Harford, and Howard Counties and Baltimore City. Since this area was classified as a moderate ozone nonattainment area, the statutory ozone attainment date, as prescribed by section 181(a) of the CAA, is June 15, 2010. The State of Maryland's request is that the attainment date be extended to June 15, 2011.

II. CAA Requirements and EPA Actions Regarding One-Year Extensions

Section 172(a)(2)(C) of subpart 1 of the CAA provides for EPA to extend the attainment date for an area by one year if the State has complied with all the requirements and commitments pertaining to the area in the applicable implementation plan and no more than a minimal number of exceedances of the NAAQS has occurred in the attainment year. Up to two one-year extensions may be issued for a single nonattainment area. Section 181(a)(5) of subpart 2 contains a similar provision for the ozone NAAQS, but instead of providing for an extension where there has been a "minimal" number of exceedances, it allows an extension only if there is no more than one exceedance of the NAAQS in the year proceeding the extension year. However, the language in section 181(a)(5) reflects the form of the 1-hour ozone NAAQS and not the 1997 8-hour ozone NAAQS. 40 CFR 51.907 sets forth how sections 172(a)(2)(C) and 181(a)(5) apply to an area subject to the 1997 8-hour ozone NAAQS. Under 40 CFR 51.907, an area will meet the requirement of section 172(a)(2)(C)(ii) or 181(a)(5)(B) of the CAA pertaining to one-year extensions of the attainment date if:

(a) For the first one-year extension, the area's 4th highest daily 8-hour average in the attainment year is 0.084 parts per million (ppm) or less,

(b) For the second one-year extension, the area's 4th highest daily 8-hour value, averaged over both the original attainment year and the first extension year, is 0.084 ppm or less.

(c) For purposes of paragraphs (a) and (b) of this section, the area's 4th highest daily 8-hour average shall be from the monitor with the highest 4th highest daily 8-hour average of all the monitors that represent that area.

EPA's review of the actual ozone air quality data in the Air Quality System shows that the 4th highest daily average 8-hour ozone concentrations for the 2009 attainment year ozone season, for all monitors in the Baltimore moderate ozone nonattainment area are measured at 0.084 ppm or less (Table 1), as required by 40 CFR 51.907(a). The monitoring data has been quality controlled and quality assured.

TABLE 1—MONITORING DATA FOR 8-HOUR OZONE IN THE BALTIMORE NONATTAINMENT AREA

Site ID	County/State	Year	4th Max 8-HR (ppm)
24–003–0014	Anne Arundel, MD	2009	0.070
24–005–1007	Baltimore, MD	2009	0.068
24–005–3001	Baltimore, MD	2009	0.071
24–013–0001	Carroll, MD	2009	0.068
24–025–1001	Harford, MD	2009	0.083
24–025–9001	Harford, MD	2009	0.069
24–510–0054	Baltimore (City), MD	2009	0.066

EPA has determined that the requirements for a one-year extension of the attainment date have been fulfilled as follows:

(1) The State of Maryland has complied with all requirements and commitments pertaining to the area in the applicable ozone implementation plan; and

(2) The Baltimore nonattainment area's 4th highest daily 8-hour monitored value during the 2009 ozone season is 0.084 ppm or less.

Therefore, EPA approves Maryland's attainment date extension request for the Baltimore moderate ozone nonattainment area. As a result, the chart in 40 CFR 81.321 entitled "Maryland—Ozone (8-Hour Standard)" is being modified to reflect EPA's approval of Maryland's attainment date extension request.

III. Final Action

EPA is approving the attainment date extension from June 15, 2010 to June 15, 2011 for the Baltimore nonattainment area, which is classified as moderate for the 1997 8-hour ozone NAAQS. EPA is publishing this rule without prior proposal because the Agency views this as a noncontroversial amendment and anticipates no adverse comment. However, in the "Proposed Rules" section of today's **Federal Register**, EPA is publishing a separate document that will serve as the proposal to approve the SIP revision if adverse comments are filed. This rule will be effective on September 21, 2010 without further notice unless EPA receives adverse comment by August 23, 2010. If EPA receives adverse comment, EPA will publish a timely withdrawal in the **Federal Register** informing the public that the rule will not take effect. EPA will address all public comments in a subsequent final rule based on the proposed rule. EPA will not institute a second comment period on this action. Any parties interested in commenting must do so at this time.

IV. Statutory and Executive Order Reviews

Under Executive Order 12866 (58 FR 51735, October 4, 1993), this action is not a "significant regulatory action" and therefore is not subject to review by the Office of Management and Budget. For this reason, this action is also not subject to Executive Order 13211, "Actions Concerning Regulations That Significantly Affect Energy Supply, Distribution, or Use" (66 FR 28355 (May 22, 2001)). This action merely finds that an area has qualified for a one-year extension of the attainment date of a previously established NAAQS, and imposes no additional requirements. Accordingly, the Administrator certifies

that this rule will not have a significant economic impact on a substantial number of small entities under the Regulatory Flexibility Act (5 U.S.C. 601 *et seq.*). Because this rule does not impose any additional enforceable duties, it does not contain any unfunded mandate or significantly or uniquely affect small governments, as described in the Unfunded Mandates Reform Act of 1995 (Pub. L. 104–4). This rule also does not have a substantial direct effect on one or more Indian Tribes, on the relationship between the Federal Government and Indian Tribes, or on the distribution of power and responsibilities between the Federal Government and Indian Tribes, as specified by Executive Order 13175 (65 FR 67249, November 9, 2000), nor will it have substantial direct effects on the States, on the relationship between the national government and the States, or on the distribution of power and responsibilities among the various levels of government, as specified in Executive Order 13132 (64 FR 43255, August 10, 1999), because it merely determines that each of two areas has attained a Federal standard, and does not alter the relationship or the distribution of power and responsibilities established in the CAA. This rule also is not subject to Executive Order 13045 (62 FR 19885, April 23, 1997), because it is not economically significant.

This rule does not involve establishment of technical standards, and thus, the requirements of section 12(d) of the National Technology Transfer and Advancement Act of 1995 (15 U.S.C. 272 note) do not apply. As required by section 3 of Executive Order 12988 (61 FR 4729, February 7, 1996), in issuing this rule, EPA has taken the necessary steps to eliminate drafting errors and ambiguity, minimize potential litigation, and provide a clear legal standard for affected conduct. EPA has complied with Executive Order 12630 (53 FR 8859, March 15, 1988) by examining the takings implications of the rule in accordance with the "Attorney General's Supplemental Guidelines for the Evaluation of Risk and Avoidance of Unanticipated Takings" issued under the executive order.

Executive Order (EO) 12898 (59 FR 7629 (Feb. 16, 1994)) establishes Federal executive policy on environmental justice. Its main provision directs Federal agencies, to the greatest extent practicable and permitted by law, to make environmental justice part of their mission by identifying and addressing, as appropriate, disproportionately high and adverse human health or environmental effects of their programs, policies, and activities on minority populations and low-income populations in the United States.

EPA has determined that this direct final rule will not have disproportionately high and adverse human health or environmental effects on minority or low-income populations because it does not affect the level of protection provided to human health or the environment. The rulemaking does not affect the level of protection provided to human health or the environment because extending the attainment date does not alter the emission reduction measures that are required to be implemented in the Baltimore Area, which is classified as moderate nonattainment for the 1997 8-hour ozone standard. *See* 69 FR at 23909 (April 30 2004). Additionally, if the Baltimore Area were not granted an extension of its attainment date, EPA's recourse would be to initiate a reclassification of the Baltimore Area from its current classification of moderate nonattainment to serious nonattainment, pursuant to section 181(b)(2) of the CAA. Because the Baltimore area was formerly a severe nonattainment area under the revoked 1-hour ozone standard (*see,* 56 FR at 56773, November 6, 1991), it is required to continue to implement severe area requirements pursuant to EPA's interpretation of "anti-backsliding" provision of section 172(e) of the CAA. *See* 69 FR at 23973, April 30, 2004, *South Coast Air Quality Management District* v. *EPA,* 472 F.3d 882 (DC Cir. 2006), *modified and rehearing den.,* 489 F.3d 1245 (DC Cir. 2007). The severe area requirements are more stringent than both the moderate and serious area requirements set forth in Title I, Part D, Subpart 2 of the CAA. Therefore, even if EPA were to not grant the attainment date extension and instead move to reclassify the area to serious nonttainment, no additional emission reduction measures would be required to implemented in the Baltimore area through a 181(b)(2) reclassification.

The extension of the attainment deadline for the 1997 8-hour ozone NAAQS does not impose an information collection burden under the provisions of the Paperwork Reduction Act of 1995 (44 U.S.C. 3501 *et seq.*).

List of Subjects in 40 CFR Part 81

Environmental protection, Air pollution control, National parks, Wilderness areas.

Dated: July 6, 2010.

W. C. Early,

Acting Regional Administrator, Region III.

■ 40 CFR part 81 is amended as follows:

PART 81—[AMENDED]

■ 1. The authority citation for part 81 continues to read as follows:

Authority: 42 U.S.C. 7401 *et seq.*

■ 2. In § 81.321, the table entitled "Maryland—Ozone (8-Hour Standard)" is amended by revising the entry for Baltimore, MD (Anne Arundel County, City of Baltimore, Baltimore County, Carroll County, Harford County, and Howard County) to read as follows:

§ 81.321 Maryland.

* * * * *

MARYLAND—OZONE

[8-Hour standard]

Designated Area	Designation [a]		Category/Classification	
	Date [1]	Type	Date [1]	Type
Baltimore, MD:				
Anne Arundel County		Nonattainment		[4] Subpart 2/Moderate.
City of Baltimore		Nonattainment		[4] Subpart 2/Moderate.
Baltimore County		Nonattainment		[4] Subpart 2/Moderate.
Carroll County		Nonattainment		[4] Subpart 2/Moderate.
Harford County		Nonattainment		[4] Subpart 2/Moderate.
Howard County		Nonattainment		[4] Subpart 2/Moderate.
* * *	*	*	*	*

[a] Includes Indian Country located in each county or area, except as otherwise specified.
[1] This date is June 15, 2004, unless otherwise noted.
[2] Effective April 15, 2008.
[3] November 22, 2004.

[4] Attainment date extended to June 15, 2011.

* * * * *

[FR Doc. 2010–17969 Filed 7–22–10; 8:45 am]

BILLING CODE 6560–50–P

ENVIRONMENTAL PROTECTION AGENCY

40 CFR Part 180

EPA–HQ–OPP–2009–0407; FRL–8835–6

Trichoderma Hamatum Isolate 382; Exemption from the Requirement of a Tolerance

AGENCY: Environmental Protection Agency (EPA).

ACTION: Final rule.

SUMMARY: This regulation establishes an exemption from the requirement of a tolerance for residues of the microbial pesticide, *Trichoderma hamatum* isolate 382, in or on all food commodities when applied as a fungicide and used in accordance with good agricultural practices. Interregional Research Project Number 4 (IR-4) of Rutgers University (on behalf of Sellew and Associates, LLC) submitted a petition to EPA under the Federal Food, Drug, and Cosmetic Act (FFDCA), requesting an exemption from the requirement of a tolerance. This regulation eliminates the need to establish a maximum permissible level for residues of *Trichoderma hamatum* isolate 382 under the FFDCA.

DATES: This regulation is effective July 23, 2010. Objections and requests for hearings must be received on or before September 21, 2010, and must be filed in accordance with the instructions provided in 40 CFR part 178 (see also Unit I.C. of the **SUPPLEMENTARY INFORMATION**).

ADDRESSES: EPA has established a docket for this action under docket identification (ID) number EPA–HQ–OPP–2009–0407. All documents in the docket are listed in the docket index available at *http://www.regulations.gov*. Although listed in the index, some information is not publicly available, e.g., Confidential Business Information (CBI) or other information whose disclosure is restricted by statute. Certain other material, such as copyrighted material, is not placed on the Internet and will be publicly available only in hard copy form. Publicly available docket materials are available in the electronic docket at *http://www.regulations.gov*, or, if only available in hard copy, at the Office of Pesticide Programs (OPP) Regulatory Public Docket in Rm. S–4400, One Potomac Yard (South Bldg.), 2777 S. Crystal Dr., Arlington, VA. The Docket Facility is open from 8:30 a.m. to 4 p.m., Monday through Friday, excluding legal holidays. The Docket Facility telephone number is (703) 305–5805.

FOR FURTHER INFORMATION CONTACT: Ann Sibold, Biopesticides and Pollution Prevention Division (7511P), Environmental Protection Agency, 1200 Pennsylvania Ave., NW., Washington, DC 20460–0001; telephone number: (703) 305–6502; e-mail address: *sibold.ann@epa.gov*.

SUPPLEMENTARY INFORMATION:

I. General Information

A. Does this Action Apply to Me?

You may be potentially affected by this action if you are an agricultural producer, food manufacturer, or pesticide manufacturer. Potentially affected entities may include, but are not limited to:

- Crop production (NAICS code 111).
- Animal production (NAICS code 112).
- Food manufacturing (NAICS code 311).
- Pesticide manufacturing (NAICS code 32532).

This listing is not intended to be exhaustive, but rather provides a guide for readers regarding entities likely to be affected by this action. Other types of entities not listed in this unit could also be affected. The North American Industrial Classification System (NAICS) codes have been provided to assist you and others in determining whether this action might apply to certain entities. If you have any questions regarding the applicability of this action to a particular entity, consult the person listed under **FOR FURTHER INFORMATION CONTACT**.

B. How Can I Get Electronic Access to Other Related Information?

You may access a frequently updated electronic version of 40 CFR part 180 through the Government Printing Office's e-CFR site at *http://www.gpoaccess.gov/ecfr*. To access the Harmonized Test Guidelines referenced in this document electronically, please go to *http://www.epa.gov/ocspp* and select "Test Methods and Guidelines."

C. How Can I File an Objection or Hearing Request?

Under FFDCA section 408(g), 21 U.S.C. 346a(g), any person may file an objection to any aspect of this regulation and may also request a hearing on those objections. You must file your objection or request a hearing on this regulation in accordance with the instructions provided in 40 CFR part 178. To ensure proper receipt by EPA, you must identify docket ID number EPA–HQ–OPP–2009–0407 in the subject line on the first page of your submission. All objections and requests for a hearing must be in writing, and must be received by the Hearing Clerk on or before September 21, 2010. Addresses for mail and hand delivery of objections and hearing requests are provided in 40 CFR 178.25(b).

In addition to filing an objection or hearing request with the Hearing Clerk as described in 40 CFR part 178, please submit a copy of the filing that does not contain any CBI for inclusion in the public docket. Information not marked confidential pursuant to 40 CFR part 2 may be disclosed publicly by EPA without prior notice. Submit a copy of your non-CBI objection or hearing request, identified by docket ID number EPA–HQ–OPP–2009–0407 by one of the following methods:

- *Federal eRulemaking Portal*: *http://www.regulations.gov*. Follow the on-line instructions for submitting comments.
- *Mail*: OPP Regulatory Public Docket (7502P), Environmental Protection Agency, 1200 Pennsylvania Ave., NW., Washington, DC 20460–0001.
- *Delivery*: OPP Regulatory Public Docket (7502P), Environmental Protection Agency, Rm. S–4400, One Potomac Yard (South Bldg.), 2777 S. Crystal Dr., Arlington, VA. Deliveries are only accepted during the Docket Facility's normal hours of operation (8:30 a.m. to 4 p.m., Monday through Friday, excluding legal holidays). Special arrangements should be made for deliveries of boxed information. The Docket Facility telephone number is (703) 305–5805.

II. Background and Statutory Findings

In the **Federal Register** of July 22, 2009 (74 FR 36200) (FRL–8425–8), EPA issued a notice pursuant to section 408(d)(3) of FFDCA, 21 U.S.C. 346a(d)(3), announcing the filing of a pesticide tolerance petition (PP 7E7188) by IR-4, Rutgers University, 500 College Road, East, Suite 201W, Princeton, NJ 08540 (on behalf of Sellew and Associates, LLC, 84 Shadybrook Lane, Carlisle, MA 01741). The petition requested that 40 CFR part 180 be amended by establishing an exemption from the requirement of a tolerance for residues of *Trichoderma hamatum*

isolate 382. This notice referenced a summary of the petition prepared by the petitioner, IR-4 (on behalf of Sellew and Associates, LLC), which is available in the docket, *http://www.regulations.gov*. A comment was received on the notice of filing. EPA's response to this comment is discussed in Unit VII.C.

Section 408(c)(2)(A)(i) of FFDCA allows EPA to establish an exemption from the requirement for a tolerance (the legal limit for a pesticide chemical residue in or on a food) only if EPA determines that the exemption is "safe." Section 408(c)(2)(A)(ii) of FFDCA defines "safe" to mean that "there is a reasonable certainty that no harm will result from aggregate exposure to the pesticide chemical residue, including all anticipated dietary exposures and all other exposures for which there is reliable information." This includes exposure through drinking water and in residential settings, but does not include occupational exposure. Pursuant to section 408(c)(2)(B) of FFDCA, in establishing or maintaining in effect an exemption from the requirement of a tolerance, EPA must take into account the factors set forth in section 408(b)(2)(C) of FFDCA, which require EPA to give special consideration to exposure of infants and children to the pesticide chemical residue in establishing a tolerance and to "ensure that there is a reasonable certainty that no harm will result to infants and children from aggregate exposure to the pesticide chemical residue...." Additionally, section 408(b)(2)(D) of FFDCA requires that the Agency consider "available information concerning the cumulative effects of a particular pesticide's residues and other substances that have a common mechanism of toxicity."

EPA performs a number of analyses to determine the risks from aggregate exposure to pesticide residues. First, EPA determines the toxicity of pesticides. Second, EPA examines exposure to the pesticide through food, drinking water, and through other exposures that occur as a result of pesticide use in residential settings.

III. Toxicological Profile

Consistent with section 408(b)(2)(D) of FFDCA, EPA has reviewed the available scientific data and other relevant information in support of this action and considered its validity, completeness, and reliability and the relationship of this information to human risk. EPA has also considered available information concerning the variability of the sensitivities of major identifiable subgroups of consumers, including infants and children.

A. Overview of Trichoderma Hamatum Isolate 382.

Trichoderma hamatum isolate 382 is a naturally occurring fungus that is found widely in soils, potting media, corn grits, and flour, as well as on root surfaces of various plants, decaying bark, fruits, and vegetables. Indeed, *Trichoderma hamatum* populations have been measured at levels between 1 x 10^4 and 1 x 10^8 colony-forming units (cfu) per gram dry weight of container media alone. As a pesticidal active ingredient, *Trichoderma hamatum* isolate 382 will be mixed with or applied to soilless potting media or compost mainly to induce systemic resistance to diseases of roots and aboveground plant parts. It may also suppress the activity of certain soilborne plant pathogens (including *Pythium* species, *Phytophthora* species, *Fusarium* species, *Rhizoctonia solani*, *Sclerotium rolfsii*, and *Thielaviopsis basicola*) and protect the foliage of some plant species from powdery mildew, *Botrytis* blight, *Phytophthora* blights, and dieback diseases (e.g., *Botryosphaeria* dieback) through competition for nutrients and space. No relationships are known between the *Trichoderma* genus and any pathogen of humans, animals, or plants. Most notably, *Trichoderma hamatum* isolate 382 is not considered a dermatophyte fungus in that it is not classified into any of the three genera (*Microsporum*, *Epidermophyton*, and *Trichophyton*) known to cause skin disease in animals and humans.

In conjunction with Experimental Use Permit 69006–EUP–1, which was effective from January 1, 1996 until January 1, 1998, a temporary exemption from the requirement of a tolerance was established previously for Trichoderma hamatum isolate 382 for use on selected ornamentals and vegetable bedding plants in or on the raw agricultural commodities broccoli, cabbage, cauliflower, cucumber, eggplant, lettuce, cantaloupe, pepper, tomato, and watermelon (61 FR 28580, June 5, 1996, FRL–5371–2). This temporary exemption expired on March 1, 1998. Although there are no currently existing tolerances or tolerance exemptions for *Trichoderma hamatum* species, there are permanent tolerance exemptions established for all food commodities for two strains of a closely related *Trichoderma* species: *Trichoderma harzianum* KRL–AG2 (ATCC #20847) strain T–22 under 40 CFR 180.1102 (64 FR 16856, April 7, 1999 FRL–6070–3) and *Trichoderma harzianum* strain T–39 under 40 CFR 180.1201 (65 FR 38753, June 22, 2000, FRL–6383–7).

The petitioner submitted Tier I mammalian toxicology data for the active ingredient, *Trichoderma hamatum* isolate 382. EPA has reviewed and found these data acceptable to support the establishment of a permanent exemption from the requirement of a tolerance for residues of *Trichoderma hamatum* isolate 382. These studies indicate that the active ingredient is not toxic, infective, and/or pathogenic to rats when administered by the oral, pulmonary, or injection routes of exposure and is only slightly irritating to the skin. Furthermore, even with extensive experimental uses in the mid- to late-1990s and subsequent compilation of data to support potential pesticide products, no *Trichoderma hamatum* isolate 382-related hypersensitivity incidents have been reported to EPA. The overall conclusions from these data are described in Unit III.B., while more in-depth synopses of the study results can be found in the risk assessments and Biopesticides Registration Action Document provided as references in Unit III.C.

B. Microbial Pesticide Toxicology Data Requirements

1. *Acute oral toxicity and pathogenicity – rat (Harmonized Test Guideline 885.3050; Master Record Identification Number (MRID No.) 455836–03).* An acceptable acute oral and pathogenicity study demonstrated that *Trichoderma hamatum* isolate 382 was not toxic, infective, and/or pathogenic to rats when dosed at up to 3.9 x 10^8 cfu/animal (U.S. EPA 2009, 2010b, 2010c).

2. *Acute pulmonary toxicity and pathogenicity – rat (Harmonized Test Guideline 885.3150; MRID Nos. 460106–02 and 469997–01).* An acceptable acute pulmonary toxicity and pathogenicity study demonstrated that *Trichoderma hamatum* isolate 382 was not toxic, infective, and/or pathogenic to rats when dosed intratracheally at 1.3 x 10^7 cfu/animal (U.S. EPA 2009, 2010b, 2010c).

3. *Acute injection toxicity and pathogenicity – rat (Harmonized Test Guideline 885.3200; MRID No. 475989–08).* An acceptable acute injection toxicity and pathogenicity study demonstrated that *Trichoderma hamatum* isolate 382 was not toxic, infective, and/or pathogenic in rats when dosed intraperitoneally at 4.0 x 10^7 cfu/animal (U.S. EPA 2009, 2010b, 2010c).

4. *Hypersensitivity incidents (Harmonized Test Guideline 885.3400).* No hypersensitivity incidents involving *Trichoderma hamatum* isolate 382 and

occurring during fermentation, processing, formulation, or research have been reported to the Agency. Any future hypersensitivity incidents must be reported per 40 CFR 158.2140 (U.S. EPA 2010c).

5. *Acute oral toxicity (Harmonized Test Guideline 870.1100; MRID No. 475989–04), acute dermal toxicity (Harmonized Test Guideline 870.1200; MRID No. 475989–04), and acute inhalation toxicity (Harmonized Test Guideline 870.1300; MRID No. 475989–04).* The Agency waived these acute toxicity data requirements based on *Trichoderma hamatum* isolate 382's ubiquitous presence in the environment (see Unit III.A.) and the absence of incidents of hypersensitivity, allergies, or other adverse effects, despite varying uses of *Trichoderma hamatum* isolate 382 since 1996 (e.g., research activities performed in accordance with the terms of an experimental use permit) (U.S. EPA 2009, 2010c).

6. *Primary dermal irritation – rabbit (Harmonized Test Guideline 870.2500; MRID 475989–05).* An acceptable primary dermal irritation study demonstrated that *Trichoderma hamatum* isolate 382 was slightly irritating to the skin of rabbits. The study resulted in a classification of Toxicity Category IV for this strain of *Trichoderma hamatum* (U.S. EPA 2009, 2010a, 2010c).

C. References

1. U.S. EPA. 2009. Review of Product Chemistry, Manufacturing Process, and Acute Toxicity Studies of the End Use Product (EP) Floraguard (EPA Reg. No. 74205–G) Containing the Active Ingredient (AI) *Trichoderma hamatum* isolate 382 (0.9%). Memorandum from I. Barsoum, Ph.D. and J. Kough, Ph.D. to A. Sibold dated December 14, 2009 (available as "Supporting & Related Materials" within Docket Number EPA–HQ–OPP–2010–0489 at *http://www.regulations.gov*).

2. U.S. EPA. 2010a. Review of the Registrant's Response to the Deficiencies Found by the Agency in Its Review of Product Chemistry, Manufacturing Process, and Acute Toxicity Studies of the Product *Trichoderma hamatum* isolate 382 (EPA Reg. No. 74205–G). Memorandum from I. Barsoum, Ph.D. and J. Kough, Ph.D. to A. Sibold dated April 27, 2010 (available as "Supporting & Related Materials" within Docket Number EPA–HQ–OPP–2010–0489 at *http://www.regulations.gov*).

3. U.S. EPA. 2010b. Review of Information to Support a Food Tolerance Determination for *Trichoderma hamatum* isolate 382 (ATCC# 20765), the Active Ingredient in Floraguard Related to Tolerance Petition (7E7188). Memorandum from J. Kough, Ph.D. to A. Sibold dated May 18, 2010 (available as "Supporting & Related Materials" within Docket Number EPA–HQ–OPP–2010–0489 at *http://www.regulations.gov*).

4. U.S. EPA. 2010c. *Trichoderma hamatum* isolate 382 Biopesticides Registration Action Document dated June 1, 2010 (available as "Supporting & Related Materials" within Docket Number EPA–HQ–OPP–2010–0489 at *http://www.regulations.gov*).

IV. Aggregate Exposures

In examining aggregate exposure, section 408 of FFDCA directs EPA to consider available information concerning exposures from the pesticide residue in food and all other non-occupational exposures, including drinking water from ground water or surface water and exposure through pesticide use in gardens, lawns, or buildings (residential and other indoor uses).

A. Dietary Exposure

Dietary exposure to the microbial pesticide may occur (more likely through food than drinking water), but the lack of acute oral toxicity, infectivity, and/or pathogenicity, based on a toxicology test on rats presented in Unit III.B., is just one of several factors supporting the establishment of a permanent exemption from the requirement of a tolerance for residues of *Trichoderma hamatum* isolate 382.

1. *Food.* Dietary exposure to the microbial active ingredient is expected to be minimal. *Trichoderma hamatum* isolate 382 is only intended for directed application to or incorporation into soilless potting media or compost. These application methods are not conducive to residue accumulation in crops. Moreover, *Trichoderma* species live in soils and are unlikely to persist on plants. Any spores that end up on plants due to application as a pesticide would decrease over time as a result of weathering, desiccation, and ultraviolet radiation, which can kill even quiescent forms of the fungus. In the remote likelihood that the applied fungus grew on the edible portions of treated crops, the results of the toxicology testing demonstrated that no toxicity, infectivity, and/or pathogenicity in treated animals occurred, even when dosed with high levels of *Trichoderma hamatum* isolate 382 by the oral route of exposure (see additional discussion in Unit III.B.).

2. *Drinking water exposure.* Drinking water exposure is expected to be negligible because the microbial fungicide will not be applied to water. Further, *Trichoderma hamatum* isolate 382 is a soil microorganism and would not proliferate in aquatic environments. Moreover, the Agency believes that *Trichoderma* species within the soil will not likely percolate into water due to the large size of the fungal spores and the fact that they adhere readily to soil particles. Even in the unlikely event that dietary exposure occurs through drinking water, the results of the oral toxicology testing, as described in Unit III.B., demonstrated that no toxicity, infectivity, and/or pathogenicity in treated animals occurred.

B. Other Non-Occupational Exposure

Trichoderma hamatum isolate 382 is a naturally occurring microorganism and is ubiquitous in the environment. As a pesticidal active ingredient, *Trichoderma hamatum* isolate 382 will be applied to or incorporated into soilless potting media or compost predominantly in greenhouses. Although some applications may take place in residential areas, there is no evidence of any concern for inhalation or dermal toxicity at exposure levels several orders of magnitude higher than would be expected to be encountered by a typical residential end user (see Unit III.B.). Additionally, as anticipated given that there are no recognized relationships between the *Trichoderma* genus and any pathogen of humans and animals, there have been no reports of adverse effects to humans from inhalation or dermal exposure to this widespread fungus.

V. Cumulative Effects from Substances with a Common Mechanism of Toxicity

Section 408(b)(2)(D)(v) of FFDCA requires that, when considering whether to establish, modify, or revoke a tolerance, the Agency consider "available information concerning the cumulative effects of a particular pesticide's residues and other substances that have a common mechanism of toxicity."

EPA has not found *Trichoderma hamatum* isolate 382 to share a common mechanism of toxicity with any other substances, and *Trichoderma hamatum* isolate 382 does not appear to produce a toxic metabolite as its mode against the target pests. For the purposes of this tolerance exemption action, therefore, EPA has assumed that *Trichoderma hamatum* isolate 382 does not have a common mechanism of toxicity with other substances. For information regarding EPA's efforts to determine which chemicals have a common mechanism of toxicity and to evaluate

the cumulative effects of such chemicals, see EPA's website at *http://www.epa.gov/pesticides/cumulative*.

VI. Determination of Safety for U.S. Population, Infants, and Children

FFDCA section 408(b)(2)(C) provides that EPA shall assess the available information about consumption patterns among infants and children, special susceptibility of infants and children to pesticide chemical residues, and the cumulative effects on infants and children of the residues and other substances with a common mechanism of toxicity. In addition, FFDCA section 408(b)(2)(C) provides that EPA shall apply an additional tenfold margin of safety for infants and children in the case of threshold effects to account for prenatal and postnatal toxicity and the completeness of the database unless EPA determines that a different margin of safety will be safe for infants and children. Margins of exposure (safety), which are often referred to as uncertainty factors, are incorporated into EPA risk assessments either directly or through the use of a margin of exposure analysis, or by using uncertainty (safety) factors in calculating a dose level that poses no appreciable risk.

Based on the acute toxicity and pathogenicity data discussed in Unit III.B., as well as the ubiquity of *Trichoderma hamatum* isolate 382 in the environment without reported adverse effects to humans, EPA concludes that there is a reasonable certainty that no harm will result to the United States population, including infants and children, from aggregate exposure to the residues of *Trichoderma hamatum* isolate 382. This includes all anticipated dietary exposures and all other exposures for which there is reliable information. The Agency has arrived at this conclusion because the data and information available on *Trichoderma hamatum* isolate 382 do not demonstrate toxic, pathogenic, and/or infective potential to mammals. Thus, there are no threshold effects of concern and, as a result, an additional margin of safety is not necessary.

VII. Other Considerations

A. Analytical Enforcement Methodology

An analytical method is not required for enforcement purposes since the Agency is establishing an exemption from the requirement of a tolerance without any numerical limitation.

B. International Residue Limits

In making its tolerance decisions, EPA seeks to harmonize U.S. tolerances with international standards whenever possible, consistent with U.S. food safety standards and agricultural practices. In this context, EPA considers the international maximum residue limits (MRLs) established by the Codex Alimentarius Commission (Codex), as required by FFDCA section 408(b)(4). The Codex Alimentarius is a joint United Nations Food and Agriculture Organization/World Health Organization food standards program, and it is recognized as an international food safety standards-setting organization in trade agreements to which the United States is a party. EPA may establish a tolerance that is different from a Codex MRL; however, FFDCA section 408(b)(4) requires that EPA explain the reasons for departing from the Codex level.

The Codex has not established a MRL for *Trichoderma hamatum* isolate 382.

C. Response to Comments

One comment, which specifically stated that the petition should be rejected without full testing for 20 years, was received in response to the notice of filing. The Agency notes that the data requirements do not require 20 years of testing, and no current information available to EPA suggests the need for 20 years worth of data to characterize the pesticide's toxicity, infectivity and/or pathogenicity. For the proposed uses of the microbial active ingredient (i.e., applications to or incorporation into soilless potting media or compost), the Agency has concluded that there is a reasonable certainty that no harm will result to the United States population, including infants and children, from aggregate exposure to the residues of *Trichoderma hamatum* isolate 382. Thus, under the standard in FFDCA section 408(c)(2), an exemption from the requirement of a tolerance for residues of *Trichoderma hamatum* isolate 382 is appropriate.

VIII. Conclusions

The Agency concludes that there is a reasonable certainty that no harm will result to the United States population, including infants and children, from aggregate exposure to residues of *Trichoderma hamatum* isolate 382. Therefore, an exemption is established for residues of *Trichoderma hamatum* isolate 382 in or on all food commodities when applied as a fungicide and used in accordance with good agricultural practices.

IX. Statutory and Executive Order Reviews

This final rule establishes a tolerance exemption under section 408(d) of FFDCA in response to a petition submitted to the Agency. The Office of Management and Budget (OMB) has exempted these types of actions from review under Executive Order 12866, entitled *Regulatory Planning and Review* (58 FR 51735, October 4, 1993). Because this final rule has been exempted from review under Executive Order 12866, this final rule is not subject to Executive Order 13211, entitled *Actions Concerning Regulations That Significantly Affect Energy Supply, Distribution, or Use* (66 FR 28355, May 22, 2001), or Executive Order 13045, entitled *Protection of Children from Environmental Health Risks and Safety Risks* (62 FR 19885, April 23, 1997). This final rule does not contain any information collections subject to OMB approval under the Paperwork Reduction Act (PRA), 44 U.S.C. 3501 *et seq.*, nor does it require any special considerations under Executive Order 12898, entitled *Federal Actions to Address Environmental Justice in Minority Populations and Low-Income Populations* (59 FR 7629, February 16, 1994).

Since tolerances and exemptions that are established on the basis of a petition under section 408(d) of FFDCA, such as the tolerance exemption in this final rule, do not require the issuance of a proposed rule, the requirements of the Regulatory Flexibility Act (RFA) (5 U.S.C. 601 *et seq.*) do not apply.

This final rule directly regulates growers, food processors, food handlers, and food retailers, not States or tribes. As a result, this action does not alter the relationships or distribution of power and responsibilities established by Congress in the preemption provisions of section 408(n)(4) of FFDCA. As such, the Agency has determined that this action will not have a substantial direct effect on States or tribal governments, on the relationship between the national government and the States or tribal governments, or on the distribution of power and responsibilities among the various levels of government or between the Federal Government and Indian tribes. Thus, the Agency has determined that Executive Order 13132, entitled *Federalism* (64 FR 43255, August 10, 1999), and Executive Order 13175, entitled *Consultation and Coordination with Indian Tribal Governments* (65 FR 67249, November 9, 2000), do not apply to this final rule. In addition, this final rule does not impose any enforceable duty or contain any unfunded mandate as described under Title II of the Unfunded Mandates Reform Act of 1995 (UMRA) (Public Law 104–4).

This action does not involve any technical standards that would require

Agency consideration of voluntary consensus standards pursuant to section 12(d) of the National Technology Transfer and Advancement Act of 1995 (NTTAA), Public Law 104–113, section 12(d) (15 U.S.C. 272 note).

X. Congressional Review Act

The Congressional Review Act, 5 U.S.C. 801 *et seq.*, generally provides that before a rule may take effect, the agency promulgating the rule must submit a rule report to each House of the Congress and to the Comptroller General of the United States. EPA will submit a report containing this rule and other required information to the U.S. Senate, the U.S. House of Representatives, and the Comptroller General of the United States prior to publication of this final rule in the **Federal Register**. This final rule is not a "major rule" as defined by 5 U.S.C. 804(2).

List of Subjects in 40 CFR Part 180

Environmental protection, Administrative practice and procedure, Agricultural commodities, Pesticides and pests, Reporting and recordkeeping requirements.

Dated: July 14, 2010.

Steven Bradbury,

Director, Office of Pesticide Programs.

■ Therefore, 40 CFR chapter I is amended as follows:

PART 180—[AMENDED]

■ 1. The authority citation for part 180 continues to read as follows:

Authority: 21 U.S.C. 321(q), 346a and 371.

■ 2. Section 180.1298 is added to subpart D to read as follows:

§ 180.1298 Trichoderma hamatum isolate 382; exemption from the requirement of a tolerance.

An exemption from the requirement of a tolerance is established for residues of *Trichoderma hamatum* isolate 382 in or on all food commodities when applied as a fungicide and used in accordance with good agricultural practices.

[FR Doc. 2010–18076 Filed 7–22–10; 8:45 am]

BILLING CODE 6560–50–S

ENVIRONMENTAL PROTECTION AGENCY

40 CFR Part 180

[EPA–HQ–OPP–2009–0138; FRL–8825–6]

2-Propanol, 1,1′,1″-nitrilotris-; Exemption from the Requirement of a Tolerance

AGENCY: Environmental Protection Agency (EPA).

ACTION: Final rule.

SUMMARY: This regulation establishes an exemption from the requirement of a tolerance for residues of 2-Propanol, 1,1′,1″-nitrilotris- (TIPA) (CAS No. 122–20–3) when used as an inert ingredient for use as a neutralizer on growing crops and raw agricultural commodities pre- and post-harvest. Dow AgroSciences, LLC submitted a petition to EPA under the Federal Food, Drug, and Cosmetic Act (FFDCA), requesting establishment of an exemption from the requirement of a tolerance. This regulation eliminates the need to establish a maximum permissible level for residues of TIPA.

DATES: This regulation is effective July 23, 2010. Objections and requests for hearings must be received on or before September 21, 2010, and must be filed in accordance with the instructions provided in 40 CFR part 178 (see also Unit I.C. of the **SUPPLEMENTARY INFORMATION**).

ADDRESSES: EPA has established a docket for this action under docket identification (ID) number EPA–HQ–OPP–2009–0138. All documents in the docket are listed in the docket index available at *http://www.regulations.gov*. Although listed in the index, some information is not publicly available, e.g., Confidential Business Information (CBI) or other information whose disclosure is restricted by statute. Certain other material, such as copyrighted material, is not placed on the Internet and will be publicly available only in hard copy form. Publicly available docket materials are available in the electronic docket at *http://www.regulations.gov*, or, if only available in hard copy, at the OPP Regulatory Public Docket in Rm. S–4400, One Potomac Yard (South Bldg.), 2777 S. Crystal Dr., Arlington, VA. The Docket Facility is open from 8:30 a.m. to 4 p.m., Monday through Friday, excluding legal holidays. The Docket Facility telephone number is (703) 305–5805.

FOR FURTHER INFORMATION CONTACT: Lisa Austin, Registration Division (7505P), Office of Pesticide Programs, Environmental Protection Agency, 1200 Pennsylvania Ave., NW., Washington, DC 20460–0001; telephone number: (703) 305–7894; e-mail address: *austin.lisa@epa.gov*.

SUPPLEMENTARY INFORMATION:

I. General Information

A. Does this Action Apply to Me?

You may be potentially affected by this action if you are an agricultural producer, food manufacturer, or pesticide manufacturer. Potentially affected entities may include, but are not limited to:

- Crop production (NAICS code 111).
- Animal production (NAICS code 112).
- Food manufacturing (NAICS code 311).
- Pesticide manufacturing (NAICS code 32532).

This listing is not intended to be exhaustive, but rather provides a guide for readers regarding entities likely to be affected by this action. Other types of entities not listed in this unit could also be affected. The North American Industrial Classification System (NAICS) codes have been provided to assist you and others in determining whether this action might apply to certain entities. If you have any questions regarding the applicability of this action to a particular entity, consult the person listed under **FOR FURTHER INFORMATION CONTACT**.

B. How Can I Get Electronic Access to Other Related Information?

You may access a frequently updated electronic version of 40 CFR part 180 through the Government Printing Office's e-CFR cite at *http://www.gpoaccess.gov/ecfr*. To access the harmonized test guidelines referenced in this document electronically, please go to *http://www.epa.gov/oppts* and select "Test Methods and Guidelines."

C. Can I File an Objection or Hearing Request?

Under section 408(g) of FFDCA, 21 U.S.C. 346a, any person may file an objection to any aspect of this regulation and may also request a hearing on those objections. The EPA procedural regulations which govern the submission of objections and requests for hearings appear in 40 CFR part 178. You must file your objection or request a hearing on this regulation in accordance with the instructions provided in 40 CFR part 178. To ensure proper receipt by EPA, you must identify docket ID number EPA–HQ–OPP–2009–0138 in the subject line on the first page of your submission. All

objections and requests for a hearing must be in writing, and must be received by the Hearing Clerk on or before September 21, 2010. Addresses for mail and hand delivery of objections and hearing requests are provided in 40 CFR 178.25(b).

In addition to filing an objection or hearing request with the Hearing Clerk as described in 40 CFR part 178, please submit a copy of the filing that does not contain any CBI for inclusion in the public docket that is described in **ADDRESSES**. Information not marked confidential pursuant to 40 CFR part 2 may be disclosed publicly by EPA without prior notice. Submit your copies, identified by docket ID number EPA–HQ–OPP–2009–0138, by one of the following methods:

• *Federal eRulemaking Portal*: *http://www.regulations.gov*. Follow the on-line instructions for submitting comments.

• *Mail*: Office of Pesticide Programs (OPP) Regulatory Public Docket (7502P), Environmental Protection Agency, 1200 Pennsylvania Ave., NW., Washington, DC 20460–0001.

• *Delivery*: OPP Regulatory Public Docket (7502P), Environmental Protection Agency, Rm. S–4400, One Potomac Yard (South Bldg.), 2777 S. Crystal Dr., Arlington, VA. Deliveries are only accepted during the Docket Facility's normal hours of operation (8:30 a.m. to 4 p.m., Monday through Friday, excluding legal holidays). Special arrangements should be made for deliveries of boxed information. The Docket Facility telephone number is (703) 305–5805.

II. Petition for Exemption

In the **Federal Register** of April 8, 2009 (74 FR 15971) (FRL–8407–4), EPA issued a notice pursuant to section 408 of FFDCA, 21 U.S.C. 346a, announcing the filing of a pesticide petition (PP 8E7504) by Dow AgroSciences, LLC, 9330 Zionsville Rd, Indianapolis, IN, 46268. The petition requested that 40 CFR 180.910 be amended by establishing an exemption from the requirement of a tolerance for residues of TIPA (CAS No. 122–20–3) when used as an inert ingredient for use as a neutralizer in pesticide formulations applied to growing crops and raw agricultural commodities pre- and post-harvest. That notice referenced a summary of the petition prepared by Dow AgroSciences, LLC, the petitioner, which is available in the docket, *http://www.regulations.gov*. There were no comments received in response to the notice of filing.

III. Inert Ingredient Definition

Inert ingredients are all ingredients that are not active ingredients as defined in 40 CFR 153.125 and include, but are not limited to, the following types of ingredients (except when they have a pesticidal efficacy of their own): Solvents such as alcohols and hydrocarbons; surfactants such as polyoxyethylene polymers and fatty acids; carriers such as clay and diatomaceous earth; thickeners such as carrageenan and modified cellulose; wetting, spreading, and dispersing agents; propellants in aerosol dispensers; microencapsulating agents; and emulsifiers. The term "inert" is not intended to imply nontoxicity; the ingredient may or may not be chemically active. Generally, EPA has exempted inert ingredients from the requirement of a tolerance based on the low toxicity of the individual inert ingredients.

IV. Aggregate Risk Assessment and Determination of Safety

Section 408(c)(2)(A)(i) of FFDCA allows EPA to establish an exemption from the requirement for a tolerance (the legal limit for a pesticide chemical residue in or on a food) only if EPA determines that the tolerance is "safe." Section 408(b)(2)(A)(ii) of FFDCA defines "safe" to mean that "there is a reasonable certainty that no harm will result from aggregate exposure to the pesticide chemical residue, including all anticipated dietary exposures and all other exposures for which there is reliable information." This includes exposure through drinking water and in residential settings, but does not include occupational exposure. Section 408(b)(2)(C) of FFDCA requires EPA to give special consideration to exposure of infants and children to the pesticide chemical residue in establishing a tolerance and to "ensure that there is a reasonable certainty that no harm will result to infants and children from aggregate exposure to the pesticide chemical residue. . . ."

EPA establishes exemptions from the requirement of a tolerance only in those cases where it can be clearly demonstrated that the risks from aggregate exposure to pesticide chemical residues under reasonably foreseeable circumstances will pose no appreciable risks to human health. In order to determine the risks from aggregate exposure to pesticide inert ingredients, the Agency considers the toxicity of the inert in conjunction with possible exposure to residues of the inert ingredient through food, drinking water, and through other exposures that occur as a result of pesticide use in residential settings. If EPA is able to determine that a finite tolerance is not necessary to ensure that there is a reasonable certainty that no harm will result from aggregate exposure to the inert ingredient, an exemption from the requirement of a tolerance may be established.

Consistent with section 408(c)(2)(A) of FFDCA, and the factors specified in section 408(c)(2)(B) of FFDCA, EPA has reviewed the available scientific data and other relevant information in support of this action. EPA has sufficient data to assess the hazards of and to make a determination on aggregate exposure for TIPA including exposure resulting from the exemption established by this action. EPA's assessment of exposures and risks associated with TIPA follows.

A. Toxicological Profile

EPA has evaluated the available toxicity data and considered their validity, completeness, and reliability as well as the relationship of the results of the studies to human risk. EPA has also considered available information concerning the variability of the sensitivities of major identifiable subgroups of consumers, including infants and children. Specific information on the studies received and the nature of the adverse effects caused by TIPA as well as the no-observed-adverse-effect-level (NOAEL) and the lowest-observed-adverse-effect-level (LOAEL) from the toxicity studies are discussed in this unit.

TIPA has low acute toxicity via the oral and dermal routes. It is moderately irritating to the skin and severely irritating to the eye. It is not a skin sensitizer.

A subchronic study was available in the dog. Following subchronic exposure to TIPA to dogs via the diet, no treatment related effects were noted up to the highest dose tested (288 milligrams/kilograms/day (mg/kg/day)).

A developmental study was available for review (rat) on the surrogate chemical, diisopropanolamine (DIPA). In this study maternal and offspring toxicity were not observed at the highest dose tested (1,000 mg/kg/day).

In a 1–generation reproduction toxicity study in rats with TIPA, no adverse clinical, histological, or reproductive effects were observed at the highest dose tested (M/F: 609/700 mg/kg/day).

Three mutagenicity studies (Ames test, mammalian gene mutation, and chromosome aberration) with TIPA were available for review. The results for these studies were negative.

TIPA is not expected to be carcinogenic since there were no triggers for carcinogenicity in the published study and a lack of systemic toxicity in the 1–generation reproduction study in rats as well as a negative response for mutagenicity. Also, TIPA is not listed as a carcinogen by ACGIH, IARC, NTP, or CA Prop 65.

Metabolism studies demonstrated that TIPA was rapidly and extensively absorbed with a minimum of 83% oral absorption. Virtually the entire absorbed dose was rapidly excreted primarily as unchanged TIPA in the urine of treated rats.

B. Toxicological Points of Departure/ Levels of Concern

Once a pesticide's toxicological profile is determined, EPA identifies toxicological points of departure (POD) and levels of concern to use in evaluating the risk posed by human exposure to the pesticide. For hazards that have a threshold below which there is no appreciable risk, the toxicological POD is used as the basis for derivation of reference values for risk assessment. PODs are developed based on a careful analysis of the doses in each toxicological study to determine the dose at which no adverse effects are observed (the NOAEL) and the lowest dose at which adverse effects of concern are identified (the LOAEL). Uncertainty/ safety factors are used in conjunction with the POD to calculate a safe exposure level – generally referred to as a population-adjusted dose (PAD) or a reference dose (RfD) – and a safe margin of exposure (MOE). For non-threshold risks, the Agency assumes that any amount of exposure will lead to some degree of risk. Thus, the Agency estimates risk in terms of the probability of an occurrence of the adverse effect expected in a lifetime. For more information on the general principles EPA uses in risk characterization and a complete description of the risk assessment process, see *http://www.epa.gov/pesticides/factsheets/riskassess.htm*.

A summary of the toxicological endpoints for TIPA used for human risk assessment is shown in the Table below. The 90–day toxicity study in the dog was selected for all exposure scenarios and durations for this risk assessment. The rationale for selecting this study is as follows. There was no toxicity observed at the highest dose (272 mg/kg/day) tested in the 90–day dog study. Toxicity was not observed in the 1–generation reproduction toxicity study in the rat at 609 mg/kg/day, the highest dose tested. In a 14–day toxicity study via drinking water, the NOAEL was 1,200 mg/kg/day. Although, the 30–day toxicity study via drinking water in the rat has a NOAEL of 140 mg/kg/day, there is no detail provided for microscopic findings in various organs. In addition, these findings were not reproduced in the 1–generation reproduction toxicity study in the rat. Therefore, less confidence was placed on the 30–day toxicity study in the rat. Finally, based on an EPA retrospective analysis, it was concluded that the 90–day toxicity and the 1–year toxicity studies in the dog are comparable. Therefore, based on the overall weight of evidence, the toxicity study in the dog provided a good basis for establishing the chronic reference dose (cRfD).

TABLE—SUMMARY OF TOXICOLOGICAL DOSES AND ENDPOINTS FOR TIPA FOR USE IN HUMAN RISK ASSESSMENT

Exposure/Scenario	Point of Departure and Uncertainty/Safety Factors	RfD, PAD, LOC for Risk Assessment	Study and Toxicological Effects
Acute dietary (Females 13–50 years of age)	An acute endpoint was not identified in the database.		
Acute dietary (General population including infants and children)	An acute endpoint was not identified in the database.		
Chronic dietary (All populations)	NOAEL = 272 mg/kg/day UF_A = 10x UF_H = 10x FQPA SF = 1x	Chronic RfD = 2.72 mg/kg/day cPAD = 2.72 mg/kg/day	90–Day Oral Toxicity-Dog LOAEL = was not established.
Incidental oral short-term (1 to 30 days)	NOAEL = 272 mg/kg/day UF_A = 10x UF_H = 10x FQPA SF = 1x	LOC for MOE = 100	90–Day Oral Toxicity-Dog LOAEL = was not established.
Incidental oral intermediate-term (1 to 6 months)	NOAEL = 272 mg/kg/day UF_A = 10x UF_H = 10x FQPA SF = 1x	LOC for MOE = 100	90 Day Oral Toxicity-Dog LOAEL = was not established.
Dermal short-term (1 to 30 days)	Dermal (or oral) study NOAEL = 272 mg/kg/day (dermal absorption rate = 100% UF_A = 10x UF_H = 10x FQPA SF = 1x	LOC for MOE = 100	90–Day Oral Toxicity-Dog LOAEL = was not established.
Dermal intermediate-term (1 to 6 months)	Dermal (or oral) study NOAEL = 272 mg/kg/day (dermal absorption rate = 100% when appropriate) UF_A = 10x UF_H = 10x FQPA SF = 1x	LOC for MOE = 100	90–Day Oral Toxicity-Dog LOAEL = was not established.

TABLE—SUMMARY OF TOXICOLOGICAL DOSES AND ENDPOINTS FOR TIPA FOR USE IN HUMAN RISK ASSESSMENT—Continued

Exposure/Scenario	Point of Departure and Uncertainty/Safety Factors	RfD, PAD, LOC for Risk Assessment	Study and Toxicological Effects
Inhalation short-term (1 to 30 days)	Inhalation (or oral) study NOAEL = 272 mg/kg/day (inhalation absorption rate = 100%) UF_A = 10x UF_H = 10x FQPA SF = 1x	LOC for MOE = 100	90–Day Oral Toxicity-Dog LOAEL = was not established.
Inhalation (1 to 6 months)	Inhalation (or oral) study NOAEL = 272 mg/kg/day (inhalation absorption rate = 100% UF_A = 10x UF_H = 10x FQPA SF = 1x	LOC for MOE = 100	90–Day Oral Toxicity-Dog LOAEL = was not established.
Cancer (Oral, dermal, inhalation)	Not likely to be carcinogenic based on no evidence of increased liver foci in rats and negative genotoxicity studies.		

UF_A = extrapolation from animal to human (interspecies). UF_H = potential variation in sensitivity among members of the human population (intraspecies). FQPA SF = Food Quality Protection Act Safety Factor. PAD = population adjusted dose. LOC = level of concern.

C. Exposure Assessment

1. *Dietary exposure from food and feed uses.* In evaluating dietary exposure to TIPA, EPA considered exposure under the proposed exemption from the requirement of a tolerance. EPA assessed dietary exposures from TIPA in food as follows:

i. *Acute exposure.* No adverse effects attributable to a single exposure of TIPA were seen in the toxicity databases. Therefore, an acute dietary risk assessment for TIPA is not necessary.

ii. *Chronic exposure.* In conducting the chronic dietary exposure assessment, EPA used food consumption information from the U.S. Department of Agriculture (USDA) [1994–1996 and 1998] Nationwide Continuing Surveys of Food Intake by Individuals (CSFII). As to residue levels in food, no residue data were submitted for TIPA. In the absence of specific residue data, EPA has developed an approach which uses surrogate information to derive upper bound exposure estimates for the subject inert ingredient. Upper bound exposure estimates are based on the highest tolerance for a given commodity from a list of high use insecticides, herbicides, and fungicides. A complete description of the general approach taken to assess inert ingredient risks in the absence of residue data is contained in the memorandum entitled ''Alkyl Amines Polyalkoxylates (Cluster 4): Acute and Chronic Aggregate (Food and Drinking Water) Dietary Exposure and Risk Assessments for the Inerts,'' (D361707, S. Piper, 2/25/09) and can be found at *http://www.regulations.gov* in docket ID number EPA–HQ–OPP–2008–0738.

In the dietary exposure assessment, the Agency assumed that the residue level of the inert ingredient would be no higher than the highest tolerance for a given commodity. Implicit in this assumption is that there would be similar rates of degradation (if any) between the active and inert ingredient and that the concentration of inert ingredient in the scenarios leading to these highest levels of tolerances would be no higher than the concentration of the active ingredient.

The Agency believes the assumptions used to estimate dietary exposures lead to an extremely conservative assessment of dietary risk due to a series of compounded conservatisms. First, assuming that the level of residue for an inert ingredient is equal to the level of residue for the active ingredient will overstate exposure. The concentrations of active ingredient in agricultural products are generally at least 50 percent of the product and often can be much higher. Further, pesticide products rarely have a single inert ingredient; rather, there is generally a combination of different inert ingredients used which additionally reduces the concentration of any single inert ingredient in the pesticide product in relation to that of the active ingredient.

Second, the conservatism of this methodology is compounded by EPA's decision to assume that, for each commodity, the active ingredient which will serve as a guide to the potential level of inert ingredient residues is the active ingredient with the highest tolerance level. This assumption overstates residue values because it would be highly unlikely, given the high number of inert ingredients, that a single inert ingredient or class of ingredients would be present at the level of the active ingredient in the highest tolerance for every commodity. Finally, a third compounding conservatism is EPA's assumption that all foods contain the inert ingredient at the highest tolerance level. In other words, EPA assumed 100 percent of all foods are treated with the inert ingredient at the rate and manner necessary to produce the highest residue legally possible for an active ingredient. In summary, EPA chose a very conservative method for estimating what level of inert residue could be on food, then used this methodology to choose the highest possible residue that could be found on food and assumed that all food contained this residue. No consideration was given to potential degradation between harvest and consumption even though monitoring data shows that tolerance level residues are typically one to two orders of magnitude higher than actual residues in food when distributed in commerce.

Accordingly, although sufficient information to quantify actual residue levels in food is not available, the compounding of these conservative assumptions will lead to a significant exaggeration of actual exposures. EPA does not believe that this approach underestimates exposure in the absence of residue data.

iii. *Cancer.* TIPA is not expected to be carcinogenic since there were no triggers for carcinogenicity in the published study and a lack of systemic toxicity in the 1–generation

reproduction study in rats as well as a negative response for mutagenicity. Since the Agency has not identified any concerns for carcinogenicity relating to TIPA, a cancer dietary exposure assessment was not performed.

2. *Dietary exposure from drinking water*. For the purpose of the screening level dietary risk assessment to support this request for an exemption from the requirement of a tolerance for TIPA, a conservative drinking water concentration value of 100 parts per billion based on screening level modeling was used to assess the contribution to drinking water for the chronic dietary risk assessments for parent compound. These values were directly entered into the dietary exposure model.

3. *From non-dietary exposure*. The term "residential exposure" is used in this document to refer to non-occupational, non-dietary exposure (e.g., textiles (clothing and diapers), carpets, swimming pools, and hard surface disinfection on walls, floors, tables).

TIPA may be used in inert ingredients in products that are registered for specific uses that may result in residential exposure. A screening level residential exposure and risk assessment was completed for products containing TIPA as inert ingredients. The TIPA inerts may be present in consumer personal (care) products and cosmetics (at concentrations up to 1%). The Agency selected representative scenarios, based on end-use product application methods and labeled application rates. The Agency conducted an assessment to represent worst-case residential exposure by assessing TIPA in pesticide formulations (outdoor scenarios) and TIPA in disinfectant-type uses (indoor scenarios). Further details of this residential exposure and risk analysis can be found at *http://www.regulations.gov* in the memorandum entitled: "JITF Inert Ingredients. Residential and Occupational Exposure Assessment Algorithms and Assumptions Appendix for the Human Health Risk Assessments to Support Proposed Exemption from the Requirement of a Tolerance When Used as Inert Ingredients in Pesticide Formulations," (D364751, 5/7/09, Lloyd/LaMay in docket ID number EPA–HQ–OPP–2008–0710.

4. *Cumulative effects from substances with a common mechanism of toxicity*. Section 408(b)(2)(D)(v) of FFDCA requires that, when considering whether to establish, modify, or revoke a tolerance, the Agency consider "available information" concerning the cumulative effects of a particular pesticide's residues and "other substances that have a common mechanism of toxicity."

EPA has not found TIPA to share a common mechanism of toxicity with any other substances, and TIPA does not appear to produce a toxic metabolite produced by other substances. For the purposes of this tolerance action, therefore, EPA has assumed that TIPA does not have a common mechanism of toxicity with other substances. For information regarding EPA's efforts to determine which chemicals have a common mechanism of toxicity and to evaluate the cumulative effects of such chemicals, see EPA's website at *http://www.epa.gov/pesticides/cumulative*.

D. Safety Factor for Infants and Children

1. *In general*. Section 408(b)(2)(C) of FFDCA provides that EPA shall apply an additional tenfold (10X) margin of safety for infants and children in the case of threshold effects to account for prenatal and postnatal toxicity and the completeness of the database on toxicity and exposure unless EPA determines based on reliable data that a different margin of safety will be safe for infants and children. This additional margin of safety is commonly referred to as the FQPA Safety Factor (SF). In applying this provision, EPA either retains the default value of 10X, or uses a different additional safety factor when reliable data available to EPA support the choice of a different factor.

2. *Prenatal and postnatal sensitivity*. Fetal susceptibility was not observed in either the developmental study with DIPA or the one generation reproduction study with TIPA in the rat. There were no toxic effects observed in parents nor offspring in either study at the highest doses tested, 1,000 and 700 mg/kg/day, respectively. A developmental toxicity study in rabbits is not available in the database. However, the concern for the lack of this study is low because no systemic toxicity was observed at the limit dose in the developmental and reproduction studies in rats (700 mg/kg/day). Also, other studies in the database such as the 90–day toxicity study in the dog and the 14–day toxicity study via drinking water in the rat do not show significant systemic toxicity.

3. *Conclusion*. EPA has determined that reliable data show the safety of infants and children would be adequately protected if the FQPA SF were reduced to 1X. That decision is based on the following findings:

i. The toxicity database for TIPA is adequate.

ii. There is no indication that TIPA is a neurotoxic or immunotoxic chemical and there is no need for a developmental neurotoxicity study or additional UFs to account for neurotoxicity.

iii. There is no evidence that DIPA or TIPA result in increased susceptibility in *in utero* rats in the prenatal developmental studies or in young rats in the 1–generation reproduction study, respectively.

iv. There are no residual uncertainties identified in the exposure databases. The dietary food exposure assessments were performed based on the assumptions of 100% crop treated and tolerance-level residues. EPA made conservative (protective) assumptions in the ground and surface water modeling used to assess exposure to TIPA in drinking water. EPA used similarly conservative assumptions to assess postapplication exposure of children as well as incidental oral exposure of toddlers. These assessments will not underestimate the exposure and risks posed by TIPA.

E. Aggregate Risks and Determination of Safety

EPA determines whether acute and chronic dietary pesticide exposures are safe by comparing aggregate exposure estimates to the acute PAD (aPAD) and chronic PAD (cPAD). For linear cancer risks, EPA calculates the lifetime probability of acquiring cancer given the estimated aggregate exposure. Short-, intermediate-, and chronic-term risks are evaluated by comparing the estimated aggregate food, water, and residential exposure to the appropriate PODs to ensure that an adequate MOE exists.

1. *Acute risk*. An acute aggregate risk assessment takes into account acute exposure estimates from dietary consumption of food and drinking water. No adverse effect resulting from a single oral exposure was identified and no acute dietary endpoint was selected. Therefore, TIPA is not expected to pose an acute risk.

2. *Chronic risk*. Using the exposure assumptions described in this unit for chronic exposure, EPA has concluded that chronic exposure to TIPA from food and water will utilize 22.9% of the cPAD for children 1 to 2 years old, the population group receiving the greatest exposure. Based on the explanation in this unit, regarding residential use patterns, chronic residential exposure to residues of TIPA is not expected.

3. *Short-term risk*. Short-term aggregate exposure takes into account short-term residential exposure plus chronic exposure to food and water

(considered to be a background exposure level).

TIPA is currently used as an inert ingredient in pesticide products that are registered for uses that could result in short-term residential exposure, and the Agency has determined that it is appropriate to aggregate chronic exposure through food and water with short-term residential exposures to TIPA.

Using the exposure assumptions described in this unit for short-term exposures, EPA has concluded the combined short-term food, water, and residential exposures result in aggregate MOEs of 679 for both adult males and females. Adult residential exposure combines high end dermal and inhalation handler exposure from indoor hand wiping with a high end post application dermal exposure from contact with treated lawns. EPA has concluded the combined short-term aggregated food, water, and residential exposures result in an aggregate MOE of 337 for children. Children's residential exposure includes total exposures associated with contact with treated lawns (dermal and hand-to-mouth exposures). Because EPA's level of concern for TIPA is a MOE of 100 or below, these MOEs are not of concern.

4. *Intermediate-term risk*. Intermediate-term aggregate exposure takes into account intermediate-term residential exposure plus chronic exposure to food and water (considered to be a background exposure level).

TIPA is currently used as an inert ingredient in pesticide products that are registered for uses that could result in intermediate-term residential exposure, and the Agency has determined that it is appropriate to aggregate chronic exposure through food and water with intermediate-term residential exposures to TIPA.

Using the exposure assumptions described in this unit for intermediate-term exposures, EPA has concluded that the combined intermediate-term food, water, and residential exposures result in aggregate MOEs of 1,114 for adult males and females. Adult residential exposure includes high end post application dermal exposure from contact with treated lawns. EPA has concluded the combined intermediate-term aggregated food, water, and residential exposures result in an aggregate MOE of 387 for children. Children's residential exposure includes total exposures associated with contact with treated lawns (dermal and hand-to-mouth exposures). Because EPA's level of concern for TIPA is a MOE of 100 or below, these MOEs are not of concern.

5. *Aggregate cancer risk for U.S. population*. TIPA is not expected to be carcinogenic since there were no triggers for carcinogenicity in the published study and a lack of systemic toxicity in the 1–generation reproduction study in rats as well as a negative response for mutagenicity.

6. *Determination of safety*. Based on these risk assessments, EPA concludes that there is a reasonable certainty that no harm will result to the general population, or to infants and children from aggregate exposure to TIPA residues.

V. Other Considerations

A. Analytical Enforcement Methodology

An analytical method is not required for enforcement purposes since the Agency is establishing an exemption from the requirement of a tolerance without any numerical limitation.

B. International Residue Limits

The Agency is not aware of any country requiring a tolerance for 2-Propanol, 1,1′,1″-nitrilotris- nor have any CODEX Maximum Residue Levels (MRLs) been established for any food crops at this time.

VI. Conclusions

Therefore, an exemption from the requirement of a tolerance is established under 40 CFR 180.910 for TIPA (CAS No. 122–20–3) when used as an inert ingredient (used as a neutralizer) in pesticide formulations applied to growing crops and raw agricultural commodities pre- and post-harvest without limitation.

VII. Statutory and Executive Order Reviews

This final rule establishes a tolerance under section 408(d) of FFDCA in response to a petition submitted to the Agency. The Office of Management and Budget (OMB) has exempted these types of actions from review under Executive Order 12866, entitled *Regulatory Planning and Review* (58 FR 51735, October 4, 1993). Because this final rule has been exempted from review under Executive Order 12866, this final rule is not subject to Executive Order 13211, entitled *Actions Concerning Regulations That Significantly Affect Energy Supply, Distribution, or Use* (66 FR 28355, May 22, 2001) or Executive Order 13045, entitled *Protection of Children from Environmental Health Risks and Safety Risks* (62 FR 19885, April 23, 1997). This final rule does not contain any information collections subject to OMB approval under the Paperwork Reduction Act (PRA), 44 U.S.C. 3501 *et seq.*, nor does it require any special considerations under Executive Order 12898, entitled *Federal Actions to Address Environmental Justice in Minority Populations and Low-Income Populations* (59 FR 7629, February 16, 1994).

Since tolerances and exemptions that are established on the basis of a petition under section 408(d) of FFDCA, such as the tolerance in this final rule, do not require the issuance of a proposed rule, the requirements of the Regulatory Flexibility Act (RFA) (5 U.S.C. 601 *et seq.*) do not apply.

This final rule directly regulates growers, food processors, food handlers, and food retailers, not States or tribes, nor does this action alter the relationships or distribution of power and responsibilities established by Congress in the preemption provisions of section 408(n)(4) of FFDCA. As such, the Agency has determined that this action will not have a substantial direct effect on States or tribal governments, on the relationship between the national government and the States or tribal governments, or on the distribution of power and responsibilities among the various levels of government or between the Federal Government and Indian tribes. Thus, the Agency has determined that Executive Order 13132, entitled *Federalism* (64 FR 43255, August 10, 1999) and Executive Order 13175, entitled *Consultation and Coordination with Indian Tribal Governments* (65 FR 67249, November 9, 2000) do not apply to this final rule. In addition, this final rule does not impose any enforceable duty or contain any unfunded mandate as described under Title II of the Unfunded Mandates Reform Act of 1995 (UMRA) (Public Law 104–4).

This action does not involve any technical standards that would require Agency consideration of voluntary consensus standards pursuant to section 12(d) of the National Technology Transfer and Advancement Act of 1995 (NTTAA), Public Law 104–113, section 12(d) (15 U.S.C. 272 note).

VIII. Congressional Review Act

The Congressional Review Act, 5 U.S.C. 801 *et seq.*, generally provides that before a rule may take effect, the agency promulgating the rule must submit a rule report to each House of the Congress and to the Comptroller General of the United States. EPA will submit a report containing this rule and other required information to the U.S. Senate, the U.S. House of Representatives, and the Comptroller General of the United States prior to publication of this final rule in the **Federal Register**. This final rule is not

a "major rule" as defined by 5 U.S.C. 804(2).

List of Subjects in 40 CFR Part 180

Environmental protection, Administrative practice and procedure, Agricultural commodities, Pesticides and pests, Reporting and recordkeeping requirements.

Dated: July 7, 2010.

Lois Rossi,

Director, Registration Division, Office of Pesticide Programs.

■ Therefore, 40 CFR chapter I is amended as follows:

PART 180—[AMENDED]

■ 1. The authority citation for part 180 continues to read as follows:

Authority: 21 U.S.C. 321(q), 346a and 371.

■ 2. In the table in § 180.910, add alphabetically an entry for the following inert ingredient to read as follows:

§ 180.910 Inert ingredients used pre-and post-harvest; exemptions from the requirement of a tolerance.

* * * * *

Inert ingredients	Limits	Uses
* * * * * * *		
2-Propanol, 1,1′,1″-nitrilotris- (CAS No. 122–20–3)	without limitation	neutralizer
* * * * * * *		

[FR Doc. 2010–18097 Filed 7–22–10; 8:45 am]

BILLING CODE 6560–50–S

ENVIRONMENTAL PROTECTION AGENCY

40 CFR Part 300

[EPA–R03–SFUND–2010–0436; FRL–9177–8]

National Oil and Hazardous Substances Pollution Contingency Plan; National Priorities List: Partial Deletion of the Letterkenny Army Depot Southeastern (SE) Area and Letterkenny Army Depot Property Disposal Office (PDO) Area Superfund Sites

AGENCY: Environmental Protection Agency.

ACTION: Direct final rule.

SUMMARY: The Environmental Protection Agency (EPA) Region III is publishing a direct final Notice of Deletion of portions of the Letterkenny Army Depot Southeastern (SE) Area and Letterkenny Army Depot Property Disposal Office (PDO) Area (Sites), located in Chambersburg, PA, from the National Priorities List (NPL). The NPL, promulgated pursuant to section 105 of the Comprehensive Environmental Response, Compensation, and Liability Act (CERCLA) of 1980, as amended, is an appendix of the National Oil and Hazardous Substances Pollution Contingency Plan (NCP). This direct final partial deletion is being published by EPA with the concurrence of the Commonwealth of Pennsylvania, through the Pennsylvania Department of Environmental Protection (PADEP), because EPA has determined that all appropriate response actions at these identified parcels under CERCLA, other than operation, maintenance, and five-year reviews, have been completed. However, this partial deletion does not preclude future actions under Superfund.

This partial deletion pertains to the soil and groundwater of parcels 24, 27, 28, 2–53, 2–53L, 2–54, 2–54L, 2–70, 2–70L, 3–89, 3–90, and 3–91. All other parcels within the site boundaries of Letterkenny Army Depot SE and PDO Areas will remain on the NPL and are not being considered for deletion as part of this action.

DATES: This direct final partial deletion is effective September 21, 2010 unless EPA receives adverse comments by August 23, 2010. If adverse comments are received, EPA will publish a timely withdrawal of the direct final partial deletion in the **Federal Register** informing the public that the partial deletion will not take effect.

ADDRESSES: Submit your comments, identified by Docket ID no. EPA–R03–SFUND–2010–0436, by one of the following methods:

- *http://www.regulations.gov.* Follow on-line instructions for submitting comments.
- *E-mail: hoover.gerald@epa.gov.*
- *Fax:* (215) 814–3025, Attn: Gerald Hoover.
- *Mail or Hand Delivery to:* U.S. Environmental Protection Agency, Region III, Attn: Gerald Hoover (3HS11), 1650 Arch Street, Philadelphia, PA 19103–2029. Phone: (215) 814–2077. Business Hours: Mon. thru Fri.—9 a.m. to 4 p.m.

Instructions: Direct your comments to Docket ID no. EPA–R03–SFUND–2010–0436. EPA's policy is that all comments received will be included in the public docket without change and may be made available online at *http://www.regulations.gov,* including any personal information provided, unless the comment includes information claimed to be Confidential Business Information (CBI) or other information whose disclosure is restricted by statute. Do not submit information that you consider to be CBI or otherwise protected through *http://www.regulations.gov* or e-mail. The *http://www.regulations.gov* Web site is an "anonymous access" system, which means EPA will not know your identity or contact information unless you provide it in the body of your comment. If you send an e-mail comment directly to EPA without going through *http://www.regulations.gov,* your e-mail address will be automatically captured and included as part of the comment that is placed in the public docket and made available on the Internet. If you submit an electronic comment, EPA recommends that you include your name and other contact information in the body of your comment and with any disk or CD–ROM you submit. If EPA cannot read your comment due to technical difficulties and cannot contact you for clarification, EPA may not be able to consider your comment. Electronic files should avoid the use of special characters, any form of encryption, and be free of any defects or viruses.

Docket: All documents in the docket are listed in the *http://www.regulations.gov* index. Although listed in the index, some information is not publicly available, e.g., CBI or other information whose disclosure is restricted by statute. Certain other material, such as copyrighted material, will be publicly available only in hard copy. Publicly available docket materials are available either electronically in *http://www.regulations.gov* or at:

U.S. EPA Region III, Library, 2nd Floor, 1650 Arch Street, Philadelphia, PA, 19103–2029. Phone: (215) 814–5254. Business Hours: Mon. thru Fri.—8 a.m. to 5 p.m.

Letterkenny Army Depot, Building 14, Chambersburg, PA 17201–4150. POC: Bryan Hoke. Phone: 717–267–9836.

FOR FURTHER INFORMATION CONTACT: Gerald Hoover, Remedial Project Manager (3HS11), U.S. Environmental Protection Agency, Region III, 1650 Arch Str., Philadelphia, PA 19103–2029, (215) 814–2077.

SUPPLEMENTARY INFORMATION:

Table of Contents

I. Introduction
II. NPL Deletion Criteria
III. Partial Deletion Procedures
IV. Basis for Site Partial Deletion
V. Partial Deletion Action

I. Introduction

EPA Region III is publishing this direct final Notice of Partial Deletion of portions of the Letterkenny Army Depot Southeastern (SE) Area and Letterkenny Army Depot Property Disposal Office (PDO) Area (Sites) from the National Priorities List (NPL). This partial deletion pertains to the soil and groundwater of parcels 24, 27, 28, 2–53, 2–53L, 2–54, 2–54L, 2–70, 2–70L, 3–89, 3–90, and 3–91. The NPL constitutes Appendix B of 40 CFR part 300, which is the Oil and Hazardous Substances Pollution Contingency Plan (NCP), which EPA promulgated pursuant to Section 105 of the Comprehensive Environmental Response, Compensation and Liability Act (CERCLA) of 1980, as amended. EPA maintains the NPL as the list of sites that appear to present a significant risk to public health, welfare, or the environment. Sites on the NPL may be the subject of remedial actions financed by the Hazardous Substance Superfund (Fund). This partial deletion of the Letterkenny Army Depot SE and PDO Areas is proposed in accordance with 40 CFR 300.425(e) and is consistent with the Notice of Policy Change: Partial Deletion of Sites Listed on the National Priorities List. 60 FR 55466 (Nov. 1, 1995). As described in 300.425(e)(3) of the NCP, a portion of a site deleted from the NPL remains eligible for Fund-financed remedial action if future conditions warrant such actions.

Because EPA considers this action to be noncontroversial and routine, this action will be effective September 21, 2010 unless EPA receives adverse comments by August 23, 2010. Along with this direct final Notice of Partial Deletion, EPA is co-publishing a Notice of Intent for Partial Deletion in the "Proposed Rules" section of the **Federal Register**. If adverse comments are received within the 30-day public comment period on this partial deletion action, EPA will publish a timely withdrawal of this direct final Notice of Partial Deletion before the effective date of the partial deletion and the partial deletion will not take effect. EPA will, as appropriate, prepare a response to comments and continue with the deletion process on the basis of the Notice of Intent for Partial Deletion and the comments already received. There will be no additional opportunity to comment.

Section II of this document explains the criteria for deleting sites from the NPL. Section III discusses procedures that EPA is using for this action. Section IV discusses the parcels 24, 27, 28, 2–53, 2–53L, 2–54, 2–54L, 2–70, 2–70L, 3–89, 3–90, and 3–91 of the Letterkenny Army Depot SE and PDO Areas and demonstrates how they meet the deletion criteria. Section V discusses EPA's action to partially delete the parcels from the NPL unless adverse comments are received during the public comment period.

II. NPL Deletion Criteria

The NCP establishes the criteria that EPA uses to delete sites from the NPL. In accordance with 40 CFR 300.425(e), sites may be deleted from the NPL where no further response is appropriate. In making such a determination pursuant to 40 CFR 300.425(e), EPA will consider, in consultation with the Commonwealth, whether any of the following criteria have been met:

i. Responsible parties or other persons have implemented all appropriate response actions required;

ii. All appropriate Fund-financed response under CERCLA has been implemented, and no further response action by responsible parties is appropriate; or

iii. The remedial investigation has shown that the release poses no significant threat to public health or the environment and, therefore, the taking of remedial measures is not appropriate.

Pursuant to CERCLA section 121(c) and the NCP, EPA conducts five-year reviews to ensure the continued protectiveness of remedial actions where hazardous substances, pollutants, or contaminants remain at a site above levels that allow for unlimited use and unrestricted exposure. EPA conducts such five-year reviews even if a site is deleted from the NPL. EPA may initiate further action to ensure continued protectiveness at a deleted site if new information becomes available that indicates it is appropriate. Whenever there is a significant release from a site deleted from the NPL, the deleted site may be restored to the NPL without application of the hazard ranking system.

III. Deletion Procedures

The following procedures apply to the deletion of parcels 24, 27, 28, 2–53, 2–53L, 2–54, 2–54L, 2–70, 2–70L, 3–89, 3–90, and 3–91 of the Letterkenny Army Depot SE and PDO Areas:

(1) EPA has consulted with the Commonwealth of Pennsylvania prior to developing this direct final Notice of Partial Deletion and the Notice of Intent for Partial Deletion co-published in the "Proposed Rules" section of the **Federal Register**.

(2) EPA has provided the Commonwealth 30 working days for review of this notice and the parallel Notice of Intent for Partial Deletion prior to their publication today, and the Commonwealth, through the Pennsylvania Department of Environmental Protection (PADEP), has concurred on the partial deletion of the Sites from the NPL, with the condition that future use of the deleted parcels remains commercial/industrial.

(3) Concurrently with the publication of this direct final Notice of Partial Deletion, a notice of the availability of the parallel Notice of Intent for Partial Deletion is being published in a major local newspaper, The Chambersburg Public Opinion. The newspaper notice announces the 30-day public comment period concerning the Notice of Intent for Partial Deletion of the Sites from the NPL.

(4) The EPA placed copies of documents supporting the partial deletion in the deletion docket and made these items available for public inspection and copying at the Sites' information repositories identified above.

(5) If adverse comments are received within the 30-day public comment period on this partial deletion action, EPA will publish a timely notice of withdrawal of this direct final Notice of Partial Deletion before its effective date and will prepare a response to comments and continue with the deletion process on the basis of the Notice of Intent for Partial Deletion and the comments already received.

Deletion of a portion of a site from the NPL does not itself create, alter, or revoke any individual's rights or obligations. Deletion of a portion of a site from the NPL does not in any way alter EPA's right to take enforcement actions, as appropriate. The NPL is designed primarily for informational purposes and to assist EPA management. Section 300.425(e)(3) of the NCP states that the deletion of a portion of a site from the NPL does not preclude eligibility for further response

actions, should future conditions warrant such actions.

IV. Basis for Partial Site Deletion

The following information provides EPA's rationale for deleting portions of the Sites from the NPL:

Site Location

Letterkenny Army Depot (LEAD) is located in south-central Pennsylvania in Franklin County, 5 miles north of the Borough of Chambersburg. The Depot covers 19,243 acres, most of which is devoted to ammunition storage. LEAD was the subject of two listings on the National Priorities List (NPL). The first was for the Southeastern (SE) Area, and the second was for the Property Disposal Office (PDO) Area. These two areas are separated by a major groundwater/surface-water drainage divide. The industrial and maintenance areas, which are primarily located in the southeastern corner of LEAD, encompass approximately 2,500 acres and include warehousing, vehicle storage, administration, industrial/maintenance, recreational activities, and housing. The infrastructure of this area includes roads; permanent, semi-permanent, and temporary structures; and utilities. Approximately 1,235 acres at LEAD have been designated for "realignment" under the Base Realignment and Closure (BRAC) initiative. "Realignment" means that the mission at LEAD is changing and approximately 1,235 acres at LEAD have been designated for release and transfer (i.e., "to-be-excessed" or to transfer ownership). The BRAC area is concentrated in the southeastern portion of LEAD, but is located in both the PDO and SE Areas. The BRAC area is being transferred to the Letterkenny Industrial Development Authority (LIDA) in phases. To date, LEAD has completed three parcel transfer phases, covering 761 acres. The Phase I parcels were transferred in 1998. The Phase II parcels were transferred in 2002. The Phase III parcels were transferred in 2004.

Site Background and History

LEAD was originally established as an ammunition storage facility, Letterkenny Ordnance Depot, in 1942. A vehicle maintenance program was started in 1947. In subsequent years additional missions were added and the facility was renamed the Letterkenny Army Depot in 1962. The principal missions at LEAD currently include maintenance, modification, storage, and demilitarization operations on tactical missiles, conventional ammunition, and tactical wheeled vehicles. Operations conducted at LEAD involved cleaning, stripping, plating, lubrication, demolition, chemical/petroleum transfer/storage, and washout/deactivation of ammunition. Many of these missions/activities involved the use and/or disposal of chlorinated solvents, primarily trichloroethene (TCE) and 1,1,1-trichloroethane (TCA), along with petroleum hydrocarbons and other solvents.

The Letterkenny Army Depot SE Area (EPA ID PA6213820503) was listed on the NPL in the final rule appearing in the 7/22/87 **Federal Register** (52 FR 27620–27642).

The Letterkenny Army Depot PDO Area (EPA ID PA2210090054) was listed on the NPL in the final rule appearing in the 3/13/89 **Federal Register** (54 FR 10512–10517).

The parcels to be deleted from the NPL are all in an area known as the Southern Martinsburg Shale Region (SMSR), which is an area underlain by the Martinsburg Shale. These parcels are located in both the SE Area and the PDO Area. All of these parcels have been transferred from the Army to the LIDA under the BRAC Act of 1995. These parcels have been incorporated into the Cumberland Valley Business Park which is a commercial/industrial business park. The property consists of industrial land, developed land, small stands of trees, open grassy areas, commercial recreational areas (golf course and community center), administration buildings, and former military housing. No wetlands are located within the parcels, and no Federal or state threatened or endangered species are known or suspected to exist within the parcels. Land located within an approximately 0.5-mile radius of the parcels includes industrial land to the north (including land to be retained by the Army), an industrial area to the east (other BRAC sites as well as land to be retained by the Army), agricultural land to the south, and industrial land to the west (other BRAC property). The parcels are accessible to the general public via Coffey Avenue, which was transferred to LIDA and is maintained by the local townships.

This partial deletion covers the following parcels: 24, 27, 28, 2–53, 2–53L, 2–54, 2–54L, 2–70, 2–70L, 3–89, 3–90, and 3–91 (See Table 1).

TABLE 1—LIDA/PARCELS AND THE ASSOCIATED MEDIA INCLUDED IN THE PARTIAL DELETION

LIDA Parcel No.	Parcel No.	Decision document	Contaminated media
24, 2–24B	24	Phase I ROD, SEP 1998	Soil & Groundwater.
		Phase III ROD, AUG 2003	Soil & Groundwater.
27, 2–27B, 3–27C, 3–27D	27	Phase I ROD, SEP 1998	Soil & Groundwater.
		Phase II ROD, JULY 2001	Soil & Groundwater.
		Phase III ROD, AUG 2003	Soil & Groundwater.
28, 3–28B	28	Phase I ROD, SEP 1998	Soil & Groundwater.
		Phase III ROD, AUG 2003	Soil & Groundwater.
2–53	2–53	Phase II ROD, JULY 2001	Soil & Groundwater.
		Phase III ROD, AUG 2003	Soil & Groundwater.
2–53L	2–53L	Phase II ROD, JULY 2001	Soil & Groundwater.
		Phase III ROD, AUG 2003	Soil & Groundwater.
2–54	2–54	Phase II ROD, JULY 2001	Soil & Groundwater.
		Phase III ROD, AUG 2003	Soil & Groundwater.
2–54L	2–54L	Phase II ROD, JULY 2001	Soil & Groundwater.
		Phase III ROD, AUG 2003	Soil & Groundwater.
2–70	2–70	Phase II ROD, JULY 2001	Soil & Groundwater.
		Phase III ROD, AUG 2003	Soil & Groundwater.
2–70L	2–70L	Phase II ROD, JULY 2001	Soil & Groundwater.
		Phase III ROD, AUG 2003	Soil & Groundwater.

TABLE 1—LIDA/PARCELS AND THE ASSOCIATED MEDIA INCLUDED IN THE PARTIAL DELETION—Continued

LIDA Parcel No.	Parcel No.	Decision document	Contaminated media
3–89–1, 3–89–2, 3–89–3, 3–89–4, 3–89–5, 3–89–6, 3–89–7, 3–89–8, 3–89–9, 3–89–10, 3–89–11, 3–89–12, 3–89–13, 3–89–14, 3–89–15, 3–89–16, 3–89–17, 3–89–18, 3–89–19, 3–89–20, 3–89–21, 3–89–22, 3–89–23, 3–89–24, 3–89–25, 3R–89–26, 3R–89–27, 3R–89–28, 3R–89–29.	3–89	Phase III ROD, AUG 2003	Soil & Groundwater.
3–90	3–90	Phase III ROD, AUG 2003	Soil & Groundwater.
3–91	3–91	Phase III ROD, AUG 2003	Soil & Groundwater.

The location of these parcels within the boundaries of the SE and PDO sites can be seen on the map located in the site repositories.

Remedial Investigation and Feasibility Study (RI/FS)—Phase I Parcels

Parcel 24—Building 500 (Part of Soil SE OU 8)

Parcel 24, which includes Building 500 and adjacent lands, was identified through historical aerial photographs as having been used for open vehicle storage early in LEAD's operation (post World War II). Two test trenches were completed in this parcel, and one sample was analyzed for Target Analyte List (TAL) metals and total petroleum hydrocarbons (TPH). The only compound that exceeded the screening criteria was arsenic, which slightly exceeded the EPA Region III risk-based concentration (RBC). EPA and PADEP, along with the Army, as part of the BRAC Cleanup Team (BCT), agreed that the detected concentration did not warrant further remedial action for industrial use. Arsenic is a naturally occurring metal, and arsenic results obtained at LEAD are not inconsistent with the published background concentrations for this metal in Pennsylvania. Residential and child-intense use scenarios were not evaluated.

Parcel 27 and Parcel 28

No evidence of soil contamination was identified for these two parcels and therefore no further work was necessary.

At the time of the RI/FS for the Phase I Parcels, it was believed that there was groundwater contamination underlying all of the Phase I parcels. The human health risk assessment showed unacceptable risk if groundwater contact and use were unrestricted. The FS evaluated institutional controls as a remedy to restrict the property for commercial and industrial use only and to prevent exposure to the underlying groundwater.

Selected Remedy—Phase I Parcels

The Phase I Parcels ROD was signed in September 1998. The selected remedy in the Phase I ROD was institutional controls. This was a final remedy with respect to soils, and an interim remedy for groundwater. The selected remedy included the following components:

■ Restricting the property for commercial and industrial use only.

■ Not permitting soil excavation activities below a depth of 3 feet above the water table without prior approval of the Army.

■ Not permitting construction of any subsurface structure for human occupation without the prior approval of the Army, PADEP, and the EPA.

■ Restricting access or use of the groundwater underlying the property without the prior written approval of the Army, PADEP, and the EPA.

Remedial Investigation and Feasibility Study (RI/FS)—Phase II Parcels

Parcels 2–53, 2–54, and 2–70 (Phase II Parcels)

No evidence of soil contamination was identified for these three parcels and therefore no further work was necessary.

At the time of the Phase II transfer, it was believed that the groundwater underlying all of the Phase II parcels was contaminated with or potentially contaminated with volatile organic compounds. To expedite transfer, the Army and LIDA defined the Phase II parcels to exclude the groundwater. The Phase II parcels are defined to include only the surface structures and soil to a depth of 8 feet below ground surface (ft bgs), which is above the seasonal high groundwater table. The FS evaluated institutional controls as a remedy to prevent exposure to the underlying groundwater.

Selected Remedy—Phase II Parcels

The Phase II Parcels ROD was signed in July 2001. The Phase II ROD determined that no action is necessary to protect public health or welfare, or the environment from the soil at parcels 2–53, 2–54 and 2–70. Because of the suspected groundwater contamination throughout the Phase II parcels, the selected interim remedy for groundwater in the Phase II ROD consisted of land use controls. The land use controls include the following restrictions:

■ Prohibiting soil excavation, digging, drilling, or other soil-disturbing activities below a depth of 3 ft above the water table without the prior approval of the Army.

■ Prohibiting access to or the use of the groundwater underlying the Phase II parcels without the prior approval of the Army, PADEP, and EPA.

■ Prohibiting construction of any subsurface structure for human occupation without the prior approval of the Army, PADEP, and EPA.

LIDA's final reuse plan calls for industrial/commercial use for the majority of the Phase II parcels. There are zoning restrictions imposed by Greene Township to preclude residential use of land that includes Parcels 2–53, 2–54, and 2–70. However, those restrictions are independent of the NPL status of the Site and are not a result of environmental contamination.

Remedial Investigation and Feasibility Study (RI/FS)—Phase III Parcels

Soil

Parcel 3–89:

Parcel 3–89 comprises the majority of the Phase III parcels/SMSR area and is located in both the PDO and SE Areas. The parcel consists of approximately 191 acres on the northern side of Carbaugh Avenue and the western side of Coffey Avenue. Soil investigations were conducted at the Open Vehicle Storage Area, Former Uncurbed Aboveground Storage Tank (AST) North of Building 532, and the Backwash Discharge Area from the Water Treatment Plant. The soil investigations are summarized in the following paragraphs.

Open Vehicle Storage Area (OVSA) Site (Part of Soil OUs PDO OU 6 and SE OU 8)

The OVSA comprises the majority of Parcel 3–89. From approximately 1947 and continuing until the spring of 1998, the OVSA site was used for the storage of military vehicles. The most recent past practice of storage required that the

vehicles be drained of fluids (such as diesel fuel, oil, and other engine fluids) before being stored. However, interviews with former employees indicate that the vehicles were formerly stored "wet," meaning that they were stored with the fluids still in the vehicle, and that the vehicles' fluids may have leaked onto the ground before they were refurbished.

Remedial Investigations were conducted at the OVSA site in 1998, 1999, and 2000. The investigations showed possible risks associated with elevated levels of a group of semivolatile organic compounds (SVOCs) referred to as polycyclic aromatic hydrocarbons (PAHs) in soil. An engineering evaluation/cost analysis (EE/CA) was written to evaluate the need for a removal action. Based on the EE/CA findings a Removal Action was conducted in 2000. The cleanup levels used for the removal action were developed based on a future commercial/industrial post-removal reuse of the site. Approximately 45,000 tons of soil contaminated with PAHs were excavated and disposed of at approved off-site waste disposal facilities. Confirmatory sampling conducted after the removal action showed that the remaining concentrations of PAHs were at or below risk-based standards. A post-removal risk assessment was performed assuming a future commercial/industrial use as well as a potential future residential (unrestricted) use. The risk assessment showed concentrations of chemicals found in site soils, sediments, surface water, and groundwater posed no unacceptable risks to people, plants, or animals based on current and future commercial/industrial reuse. Risks to people based on a theoretical future residential use are within acceptable limits.

Former Uncurbed Aboveground Storage Tank (AST) North of Building 532 Site (Part of PDO OU 6)

This is a small site that consists of a former aboveground storage tank (AST) area. Initially, there was an uncurbed single-walled AST (275 gallons) located north of Building 532 that stored gasoline used to fuel golf carts. This single-walled AST was replaced by a double-walled AST. It is unknown how long the single-walled AST was in service. The soils near the uncurbed AST were not investigated prior to the change in ASTs. The double-walled AST was still in place at the time of the remedial investigation in 1999; however the double-walled AST has subsequently been removed because the golf course converted to electric golf carts.

An investigation was completed to determine if the operation of the former AST at the site had caused a release of contaminants to site soil. Soil sampling was performed in April 1999. Soil borings, soil sampling and analysis, data validation, and surveying were performed. The investigation results did not indicate any chemicals of concern (COCs) in soil and there were no potential sources of groundwater contamination found. Only two chemicals (acetone and lead) were identified as chemicals of potential concern (COPCs) based on a comparison of maximum chemical concentrations to the lowest regulatory residential benchmarks. However, the remedial investigation/risk assessment showed that concentrations of chemicals found in site soils pose no unacceptable risks to people based on current and likely future commercial/industrial use. Risks to people are also within acceptable limits based on a theoretical future residential use. There is minimal habitat available capable of sustaining plants and animals at this site; therefore, ecological risks were not evaluated.

Backwash Discharge Area From the Water Treatment Plant Site (Part of SE OU 8)

This site is located in the eastern part of the parcel along Coffey Avenue, near the water treatment plant for the potable water supply. In the past, sediments that accumulated in the raw water line were flushed out in the western area of the site. In the past, fluffy material (referred to as "flocculant"), which primarily consists of suspended solids removed from the water during the treatment process, was discharged to the eastern area of the site for settling.

An investigation was completed to determine if the former water treatment plant flocculant and backwash sediment disposal practices had caused a release of contaminants to site soil and sediments. Field activities were performed in October 1998. Soil borings, soil and drainage ditch soil sampling and analysis, sediment sampling and analysis, data validation, and surveying were performed. The investigation results did not indicate any COCs in soil and there were no potential sources of groundwater contamination found. Various metals were identified as COPCs based on a comparison of maximum chemical concentrations to the lowest regulatory residential benchmarks. However, the remedial investigation/risk assessment showed that concentrations of chemicals found in site soils pose no unacceptable risks to people, plants, or animals based on current and likely future commercial/industrial uses. Risks to people are also within acceptable limits based on a theoretical future residential use.

Parcel 3–90

Parcel 3–90 is approximately 8 acres in size and is located south of Carbaugh Avenue and west of Coffey Avenue. Parcel 3–90 is located in both the PDO and SE Areas. There are no structures on this parcel. This parcel is currently open land and has been an open area in the past with no apparent storage or industrial activities. No further work was necessary.

Parcel 3–91

Parcel 3–91 is approximately 1.5 acres in size and is located east of Coffey Avenue and north of Texas/Innovation Avenue in the southeastern corner of the SMSR. Parcel 3–91 is located entirely within the SE Area. There are no structures on Parcel 3–91. This parcel consists entirely of the western portion of the Building 400 Series Fire Training Area (FTA) site where industrial activities occurred. The Building 400 Series FTA area had been reportedly used in the past for a short period of time as a fire-fighting training area where a large metal pan was placed on the ground and filled with various flammable liquids, which were ignited. There was no record of the exact location of the pan, years of use, or when or if the pan was removed from the area when training activities ended. Historical aerial photographs from 1949 and 1957 show several disturbed places in this area. Based on knowledge of typical fire-training activities at LEAD, materials burned at the site may have included waste oils. There were no structures or material/waste storage on the site at the time of the remedial investigation in 1998. The only structures in the vicinity of the site were several old barracks/office buildings, which are still located near the site.

An investigation was completed to determine if the former fire training activities had caused a release of contaminants to site soil. Field activities were performed in September 1998. A geophysical survey, test trenching, soil sampling and analysis, data validation, and surveying were performed. The investigation results did not indicate any COCs in soil and there were no potential sources of groundwater contamination found. One VOC (acetone), two SVOCs (PAHs), various metals, and polychlorinated dibenzo-p-dioxins/polychlorinated dibenzofurans (PCDDs/PCDFs) were identified as

COPCs based on a comparison of maximum chemical concentrations to the lowest regulatory residential benchmarks. However, the remedial investigation/risk assessment showed that concentrations of chemicals found in site soils pose no unacceptable risks to people, plants, or animals based on current and likely future commercial-industrial use. Risks to people are also within acceptable limits based on a theoretical future residential use.

Groundwater

SMSR Groundwater

As stated above, all of the parcels in this partial deletion are in the SMSR. The SMSR contains an area of shale bedrock surrounded by downgradient limestone bedrock. This shale bedrock is generally more resistant to weathering than the surrounding limestone formations and therefore, forms the "highland" or elevated ridge areas. The SMSR straddles the boundary between the PDO and SE Area NPL Sites. Based on the geologic and topographic upgradient setting and the lack of industrial activities within the SMSR it was thought that the SMSR could be unaffected by the known and potential VOC sources located downgradient of the SMSR. Therefore a groundwater investigation was initiated in 1999 to prove that the SMSR was not impacted by any previous industrial activities at Letterkenny. Four rounds of groundwater sampling were conducted in late 1999 through 2000 and then in 2002. Results of the sampling showed that there is no VOC groundwater contamination in the SMSR. Without VOC groundwater contamination there is no potential for vapor intrusion risk throughout the SMSR. A screening level risk assessment showed that risks to people based on current and future commercial/industrial use are within acceptable limits. Risks to people based on a possible, but unlikely, residential use (including human consumption of site groundwater) are within acceptable limits. Based on the finding of no VOC contaminated groundwater, the PDO portion of the SMSR was redefined as PDO OU 7 and the SE portion was redefined as SE OU 13.

Parcels 2–53L, 2–54L, and 2–70L

These parcels consist of land underneath parcels 2–53, 2–54, and 2–70, which were previously transferred as part of the Phase II BRAC property transfer at LEAD. These parcels consist of land starting 8 ft. below ground surface and extending to the center of the earth. They are located in the southern part of the SMSR/Phase III area within SE OU 13. As stated above, in the Phase II transfer, the entire land area was not originally transferred because it was thought the groundwater located underneath the land was potentially contaminated with VOCs. These parcels were investigated as part of the SMSR groundwater investigation described previously. The Army has completed its investigation and risk assessment for the SMSR groundwater and found no environmental concerns at the site. The top portions of these parcels were transferred with an interim remedy for groundwater consisting of restrictions on soil excavation and groundwater use because at that time it was thought that the groundwater underneath the parcels was contaminated. The Phase III ROD stated that the soil excavation and groundwater restrictions could be removed.

Selected Remedy—Phase III Parcels

Soil

As stated above, all parcels subject to this partial deletion are part of the SMSR for Parcel 3–89, the Army, EPA, and PADEP have determined that risks to people, plants, and animals from potential contact with soils/sediments were acceptable at the OVSA, Former Uncurbed AST North of Building 532, and the Backwash Discharge Area sites and that no action is necessary to protect public health or welfare or the environment. For the OVSA site, this conclusion is based on the conditions of the site following the removal action that was performed in 2000 when PAH-contaminated soil was removed from the site. There were no environmental concerns in Parcels 3–90 and 3–91.

Groundwater

Based on the findings of the SMSR groundwater investigation, there is no VOC groundwater contamination and thus no unacceptable risks from groundwater in this area.

The Phase III ROD was signed in August 2003. Based on the results of the remedial investigations and risk assessments it was determined that No Further Action was necessary for the Phase III Parcels under CERCLA. The No Further Action remedy applies to the SMSR groundwater (PDO OU 7 and SE OU 13) and to the soils (PDO OU 6 and SE OU 8). In addition the ROD stated that no further action was necessary for the groundwater underlying Phase I Parcels 24, 27, 28 and Phase II Parcels, 2–53, 2–54, 2–70 and the underlying Parcels 2–53L, 2–54L, and 2–70L because they are a part of SE OU 13.

Response Actions/Cleanup Goals/ Operation & Maintenance

There are no response actions, cleanup goals, or operation & maintenance due to the No Further Action decision in the Phase III ROD for both soils and groundwater. Land use controls restrict the use of Phase I parcels to commercial and industrial use only and prohibit residential use.

Five-Year Review(s)

EPA concurred with the Army's first Five-Year Review for the PDO Area on March 12, 2007. EPA concurred on the first Five-Year Review for the SE Area in November 2001 and the second Five-Year Review for the SE Area on June 24, 2008.

In the 2007 Five-Year Review for the PDO Area, it was determined that the No Further Action Remedy for PDO OU 7 and a portion of PDO OU 6 is still considered protective of human health and the environment. This Five-Year Review did not find any issues relating to the parcels included in this partial deletion.

In the 2008 Five-Year Review for the SE Area, it was determined that the No Further Action Remedy for SE OU 13 and a portion of SE OU 8 is still considered protective of human health and the environment. This Five-Year Review did not find any issues relating to the parcels included in this partial deletion.

Pursuant to CERCLA section 121(c) and the NCP, the next PDO Area five-year review will be conducted in 2012 and the next SE Area five-year review will be conducted in 2013 to ensure other OUs at each respective Superfund Site where waste was left in place are protective of human health and the environment.

Community Involvement

Public participation activities have been satisfied as required in CERCLA section 113(k), 42 U.S.C. 9613(k), and CERCLA section 117, 42 U.S.C. 9617. Documents in the deletion docket which EPA relied on for recommendation of the deletion from the NPL are available to the public in the information repositories.

Public participation related to parcels in deletion package:

—Phase I Proposed Plan public meeting held on April 7, 1998 to present the proposed remedy for the Phase I Parcels.

—Phase II Proposed Plan public meeting held on February 22, 2001 to present the proposed remedy for the Phase II Parcels.

—Phase III Proposed Plan public meeting held on April 23, 2003 to

present the proposed remedy for the Phase III Parcels.

Determination That the Criteria for Deletion Have Been Met

No further response action under CERCLA is appropriate. EPA has determined based on the investigations conducted at these parcels and documented by the 3 RODs described above, that the Army has implemented all appropriate response actions required. Through the previous PDO and SE areas five-year reviews, EPA has also determined that the Phase III Parcels No Further Action remedy is considered protective of human health and the environment and, therefore, taking of additional remedial measures is not necessary. Other procedures required by 40 CFR 300.425(e) are detailed in Section III.

V. Deletion Action

The EPA, with concurrence dated March 2, 2010 of the Commonwealth of Pennsylvania through the Pennsylvania Department of Environmental Protection, has determined that all appropriate response actions under CERCLA have been completed. Therefore, EPA is deleting parcels 24, 27, 28, 2–53, 2–53L, 2–54, 2–54L, 2–70, 2–70L, 3–89, 3–90, and 3–91 of the Letterkenny Army Depot SE and PDO Areas Sites from the NPL.

Because EPA considers this action to be noncontroversial and routine, EPA is taking it without prior publication. This action will be effective September 21, 2010 unless EPA receives adverse comments by August 23, 2010. If adverse comments are received within the 30-day public comment period, EPA will publish a timely withdrawal of this direct final notice of partial deletion before the effective date of the partial deletion and it will not take effect. EPA will prepare a response to comments and continue with the deletion process on the basis of the notice of intent to partially delete and the comments already received. There will be no additional opportunity to comment.

List of Subjects in 40 CFR Part 300

Environmental protection, Air pollution control, Chemicals, Hazardous waste, Hazardous substances, Intergovernmental relations, Penalties, Reporting and recordkeeping requirements, Superfund, Water pollution control, Water supply.

Dated: July 12, 2010.

William C. Early,

Acting Regional Administrator, Region III.

■ For the reasons set out in this document, 40 CFR part 300 is amended as follows:

PART 300—[AMENDED]

■ 1. The authority citation for part 300 continues to read as follows:

Authority: 33 U.S.C. 1321(c)(2); 42 U.S.C. 9601–9657; E.O. 12777, 56 FR 54757, 3 CFR 1991 Comp., p. 351; E.O. 12580, 52 FR 2923, 3 CFR 1987 Comp., p. 193.

■ 2. Table 2 of Appendix B to part 300 is amended by revising the entries under Pennsylvania for "Letterkenny Army Depot (SE Area), Chambersburg" and "Letterkenny Army Depot (PDO Area), Franklin County" to read as follows:

Appendix B to Part 300—National Priorities List

TABLE 2—FEDERAL FACILITIES SECTION

State	Site name	City/County	Notes (a)
* * *	* * *	* * *	
PA	Letterkenny Army Depot (SE Area)	Chambersburg	P
* * *	* * *	* * *	
* * *	* * *	* * *	
PA	Letterkenny Army Depot (SE Area)	Franklin County	P
* * *	* * *	* * *	

(a)* * *
*P= Sites with partial deletion(s).

[FR Doc. 2010–17776 Filed 7–22–10; 8:45 am]

BILLING CODE 6560–50–P

FEDERAL COMMUNICATIONS COMMISSION

47 CFR Parts 24 and 27

Personal Communications Services and Miscellaneous Wireless Communications Services

CFR Correction

In Title 47 of the Code of Federal Regulations, Parts 20 to 39, revised as of October 1, 2009, on page 148, § 24.232 is revised and on page 336, in § 27.50, paragraph (d) is revised to read as follows:

§ 24.232 Power and antenna height limits.

(a)(1) Base stations with an emission bandwidth of 1 MHz or less are limited to 1640 watts equivalent isotropically radiated power (EIRP) with an antenna height up to 300 meters HAAT, except as described in paragraph (b) below.

(2) Base stations with an emission bandwidth greater than 1 MHz are limited to 1640 watts/MHz equivalent isotropically radiated power (EIRP) with an antenna height up to 300 meters HAAT, except as described in paragraph (b) below.

(3) Base station antenna heights may exceed 300 meters HAAT with a corresponding reduction in power; *see* Tables 1 and 2 of this section.

(4) The service area boundary limit and microwave protection criteria specified in §§ 24.236 and 24.237 apply.

TABLE 1—REDUCED POWER FOR BASE STATION ANTENNA HEIGHTS OVER 300 METERS, WITH EMISSION BANDWIDTH OF 1 MHZ OR LESS

HAAT in meters	Maximum EIRP watts
≤300	1640
≤500	1070
≤1000	490
≤1500	270
≤2000	160

TABLE 2—REDUCED POWER FOR BASE STATION ANTENNA HEIGHTS OVER 300 METERS, WITH EMISSION BANDWIDTH GREATER THAN 1 MHZ

HAAT in meters	Maximum EIRP watts/MHz
≤300	1640
≤500	1070
≤1000	490
≤1500	270
≤2000	160

(b)(1) Base stations that are located in counties with population densities of 100 persons or fewer per square mile, based upon the most recently available population statistics from the Bureau of the Census, with an emission bandwidth of 1 MHz or less are limited to 3280 watts equivalent isotropically radiated power (EIRP) with an antenna height up to 300 meters HAAT.

(2) Base stations that are located in counties with population densities of 100 persons or fewer per square mile, based upon the most recently available population statistics from the Bureau of the Census, with an emission bandwidth greater than 1 MHz are limited to 3280 watts/MHz equivalent isotropically radiated power (EIRP) with an antenna height up to 300 meters HAAT.

(3) Base station antenna heights may exceed 300 meters HAAT with a corresponding reduction in power; *see* Tables 3 and 4 of this section.

(4) The service area boundary limit and microwave protection criteria specified in §§ 24.236 and 24.237 apply.

(5) Operation under this paragraph (b) at power limits greater than permitted under paragraph (a) of this section must be coordinated in advance with all broadband PCS licensees authorized to operate on adjacent frequency blocks within 120 kilometers (75 miles) of the base station and is limited to base stations located more than 120 kilometers (75 miles) from the Canadian border and more than 75 kilometers (45 miles) from the Mexican border.

TABLE 3—REDUCED POWER FOR BASE STATION ANTENNA HEIGHTS OVER 300 METERS, WITH EMISSION BANDWIDTH OF 1 MHZ OR LESS

HAAT in meters	Maximum EIRP watts
≤300	3280
≤500	2140
≤1000	980
≤1500	540
≤2000	320

TABLE 4—REDUCED POWER FOR BASE STATION ANTENNA HEIGHTS OVER 300 METERS, WITH EMISSION BANDWIDTH GREATER THAN 1 MHZ

HAAT in meters	Maximum EIRP watts/MHz
≤300	3280
≤500	2140
≤1000	980
≤1500	540
≤2000	320

(c) Mobile and portable stations are limited to 2 watts EIRP and the equipment must employ a means for limiting power to the minimum necessary for successful communications.

(d) Power measurements for transmissions by stations authorized under this section may be made either in accordance with a Commission-approved average power technique or in compliance with paragraph (e) of this section. In both instances, equipment employed must be authorized in accordance with the provisions of § 24.51. In measuring transmissions in this band using an average power technique, the peak-to-average ratio (PAR) of the transmission may not exceed 13 dB.

(e) Peak transmit power must be measured over any interval of continuous transmission using instrumentation calibrated in terms of an rms-equivalent voltage. The measurement results shall be properly adjusted for any instrument limitations, such as detector response times, limited resolution bandwidth capability when compared to the emission bandwidth, sensitivity, *etc.*, so as to obtain a true peak measurement for the emission in question over the full bandwidth of the channel.

Note to § 24.232: Height above average terrain (HAAT) is to be calculated using the method set forth in § 24.53 of this part.

[73 FR 24183, May 2, 2008]

§ 27.50 Power and antenna height limits.

* * * * *

(d) The following power and antenna height requirements apply to stations transmitting in the 1710–1755 MHz and 2110–2155 MHz bands:

(1) The power of each fixed or base station transmitting in the 2110–2155 MHz band and located in any county with population density of 100 or fewer persons per square mile, based upon the most recently available population statistics from the Bureau of the Census, is limited to:

(A) an equivalent isotropically radiated power (EIRP) of 3280 watts when transmitting with an emission bandwidth of 1 MHz or less;

(B) an EIRP of 3280 watts/MHz when transmitting with an emission bandwidth greater than 1 MHz.

(2) The power of each fixed or base station transmitting in the 2110–2155 MHz band and situated in any geographic location other than that described in paragraph (d)(1) is limited to:

(A) an equivalent isotropically radiated power (EIRP) of 1640 watts when transmitting with an emission bandwidth of 1 MHz or less;

(B) an EIRP of 1640 watts/MHz when transmitting with an emission bandwidth greater than 1 MHz.

(3) A licensee operating a base or fixed station in the 2110–2155 MHz band utilizing a power greater than 1640 watts EIRP and greater than 1640 watts/MHz EIRP must coordinate such operations in advance with all Government and non-Government satellite entities in the 2025–2110 MHz band. Operations with power greater than 1640 watts EIRP and greater than 1640 watts/MHz EIRP must be coordinated in advance with the following licensees authorized to operate within 120 kilometers (75 miles) of the base or fixed station operating in this band: all Broadband Radio Service (BRS) licensees authorized under part 27 in the 2155–2160 MHz band and all advanced wireless services (AWS) licensees authorized to operate on adjacent frequency blocks in the 2110–2155 MHz band.

(4) Fixed, mobile, and portable (hand-held) stations operating in the 1710–1755 MHz band are limited to 1 watt EIRP. Fixed stations operating in this band are limited to a maximum antenna height of 10 meters above ground. Mobile and portable stations operating in this band must employ a means for limiting power to the minimum necessary for successful communications.

(5) Equipment employed must be authorized in accordance with the provisions of § 24.51. Power measurements for transmissions by stations authorized under this section may be made either in accordance with a Commission-approved average power technique or in compliance with paragraph (d)(6) of this section. In measuring transmissions in this band using an average power technique, the peak-to-average ratio (PAR) of the transmission may not exceed 13 dB.

(6) Peak transmit power must be measured over any interval of continuous transmission using

instrumentation calibrated in terms of an rms-equivalent voltage. The measurement results shall be properly adjusted for any instrument limitations, such as detector response times, limited resolution bandwidth capability when compared to the emission bandwidth, sensitivity, *etc.,* so as to obtain a true peak measurement for the emission in question over the full bandwidth of the channel.

* * * * *

[FR Doc. 2010–18233 Filed 7–22–10; 8:45 am]

BILLING CODE 1505–01–D

DEPARTMENT OF DEFENSE

GENERAL SERVICES ADMINISTRATION

NATIONAL AERONAUTICS AND SPACE ADMINISTRATION

48 CFR Part 52

[FAC 2005–43; Correction; Docket FAR–2010–0008; Sequence 2]

RIN 9000–AL63

Federal Acquisition Regulation; Correction

AGENCY: Department of Defense (DoD), General Services Administration (GSA), and National Aeronautics and Space Administration (NASA).

ACTION: Correcting amendment.

SUMMARY: The Civilian Agency Acquisition Council and the Defense Acquisition Regulations Council are issuing a correction to FAR Case 2010–008, Recovery Act Subcontract Reporting Procedures (Item III), which was published in the **Federal Register** at 75 FR 38684, July 2, 2010.

DATES: *Effective Date:* July 23, 2010.

FOR FURTHER INFORMATION CONTACT: The Regulatory Secretariat, at 1800 F Street, NW., Room 4041, Washington, DC 20405, or (202) 501–4755, for information pertaining to status or publication schedules. Please cite FAC 2005–43; Correction.

SUPPLEMENTARY INFORMATION:

Background

DoD, GSA and NASA published a document in the **Federal Register** of July 2, 2010 (75 FR 38684) amending FAR 52.204–11(d)(10). The amendment was incorrect.

Need for Correction

As published, the interim rule contains a typographical error which needs to be corrected.

List of Subjects in 48 CFR Part 52

Government procurement.

■ Accordingly, 48 CFR part 52 is corrected by making the following correcting amendment:

PART 52—SOLICITATION PROVISIONS AND CONTRACT CLAUSES

■ 1. The authority citation for 48 CFR part 52 continues to read as follows:

Authority: 40 U.S.C. 121(c); 10 U.S.C. chapter 137; and 42 U.S.C. 2473(c).

52.204–11 [Amended]

■ 2. Amend section 52.204–11 by removing from the introductory text of paragraph (d)(10) "(d)(1)(i)" and adding "(d)(10)(i)" in its place.

Dated: July 20, 2010.

Edward Loeb,

Director, Acquisition Policy Division.

[FR Doc. 2010–18141 Filed 7–22–10; 8:45 am]

BILLING CODE 6820–EP–P

DEPARTMENT OF COMMERCE

National Oceanic and Atmospheric Administration

50 CFR Part 648

[Docket No. 0907301206–0032–02]

RIN 0648–XW95

Fisheries of the Northeastern United States; Atlantic Mackerel, Squid, and Butterfish Fisheries; Adjustment to the Loligo Trimester 2 and 3 Quota; Correction

AGENCY: National Marine Fisheries Service (NMFS), National Oceanic and Atmospheric Administration (NOAA), Commerce.

ACTION: Temporary rule; correction.

SUMMARY: NMFS is correcting a temporary rule to adjust the 2010 fishing year (FY) Trimester 2 and 3 *Loligo* squid quotas. The rule contained a numerical error in the metric value of the revised Trimester 3 quota. The correct value for the revised Trimester 3 quota of 23,743,619 lb is 10,770 mt.

DATES: Effective June 30, 2010, through December 31, 2010.

FOR FURTHER INFORMATION CONTACT: Lindsey Feldman, Fishery Management Specialist, (978) 675–2179, fax (978) 281–9135.

SUPPLEMENTARY INFORMATION: On June 30, 2010 (75 FR 37739), a temporary rule was published adjusting the FY 2010 Trimester 2 and 3 *Loligo* squid quotas. The temporary rule correctly revised the Trimester 3 quota from the initial quota of 16,461,920 lb (7,467 mt) to a new quota of 23,743,619 lb, but erroneously specified the metric equivalent as 13,770 mt. The corrected metric equivalent is 10,770 mt.

Correction

In rule FR Doc. 2010–15933 published on June 30, 2010, (75 FR 37739) make the following correction. On page 37739, in the third column, correct "(13,770 mt)" to read "(10,770 mt)".

Authority: 16 U.S.C. 1801 *et seq.*

Dated: July 20, 2010

Carrie Selberg,

Acting Director, Office of Sustainable Fisheries, National Marine Fisheries Services.

[FR Doc. 2010–18131 Filed 7–22–10; 8:45 am]

BILLING CODE 3510–22–S

DEPARTMENT OF COMMERCE

National Oceanic and Atmospheric Administration

50 CFR Part 679

[Docket No. 0910131362–0087–02]

RIN 0648–XX77

Fisheries of the Exclusive Economic Zone Off Alaska; Pacific Ocean Perch in the Western Yakutat District of the Gulf of Alaska

AGENCY: National Marine Fisheries Service (NMFS), National Oceanic and Atmospheric Administration (NOAA), Commerce.

ACTION: Temporary rule; closure.

SUMMARY: NMFS is prohibiting directed fishing for Pacific ocean perch by catcher/processors participating in the limited access or opt-out fisheries that are subject to sideboard limits established under the Central Gulf of Alaska (GOA) Rockfish Program in the Western Yakutat district of the GOA. This action is necessary to prevent exceeding the 2010 sideboard limit of Pacific ocean perch established for catcher/processors participating in the limited access or opt-out fisheries in the Western Yakutat district of the GOA.

DATES: Effective 1200 hrs, Alaska local time (A.l.t.), July 20, 2010, through 1200 hrs, A.l.t., July 31, 2010.

FOR FURTHER INFORMATION CONTACT: Steve Whitney, 907–586–7269.

SUPPLEMENTARY INFORMATION: NMFS manages the groundfish fishery in the GOA exclusive economic zone according to the Fishery Management Plan for Groundfish of the Gulf of Alaska (FMP) prepared by the North Pacific Fishery Management Council

under authority of the Magnuson-Stevens Fishery Conservation and Management Act. Regulations governing fishing by U.S. vessels in accordance with the FMP appear at subpart H of 50 CFR part 600 and 50 CFR part 679.

The 2010 Pacific ocean perch sideboard limit established for catcher/processors participating in the limited access or opt-out fisheries that are subject to sideboard limits in the Central GOA Rockfish Program in the Western Yakutat district is 1,099 metric tons (mt). The sideboard limit is established by the final 2010 and 2011 harvest specifications for groundfish of the GOA (75 FR 11749, March 12, 2010) and as posted as the 2010 Rockfish Program Catcher/Processor Sideboards at *http://alaskafisheries.noaa.gov/sustainablefisheries/goarat/default.htm*.

In accordance with § 679.82(d)(7)(i)(A), the Administrator, Alaska Region, NMFS (Regional Administrator), has determined that the 2010 Pacific ocean perch sideboard limit established for catcher processors participating in the limited access or opt-out fisheries in the Western Yakutat district will soon be reached. Therefore, the Regional Administrator is establishing a directed fishing allowance of 999 mt, and is setting aside the remaining 100 mt as bycatch to support other anticipated groundfish fisheries. In accordance with § 679.82(d)(7)(ii), the Regional Administrator finds that this directed fishing allowance has been reached. Consequently, NMFS is prohibiting directed fishing for the Pacific ocean perch sideboard limit established for catcher/processors participating in the limited access or opt-out fisheries in the Western Yakutat district of the Gulf of Alaska.

After the effective date of this closure the maximum retainable amounts at § 679.20(e) and (f) apply at any time during a trip.

Classification

This action responds to the best available information recently obtained from the fishery. The Assistant Administrator for Fisheries, NOAA, (AA), finds good cause to waive the requirement to provide prior notice and opportunity for public comment pursuant to the authority set forth at 5 U.S.C. 553(b)(B) as such requirement is impracticable and contrary to the public interest. This requirement is impracticable and contrary to the public interest as it would prevent NMFS from responding to the most recent fisheries data in a timely fashion and would delay the closure of Pacific ocean perch sideboard limit for catcher/processors participating in the limited access or opt-out fisheries in the Western Yakutat district. NMFS was unable to publish a notice providing time for public comment because the most recent, relevant data only became available as of July 19, 2010.

The AA also finds good cause to waive the 30–day delay in the effective date of this action under 5 U.S.C. 553(d)(3). This finding is based upon the reasons provided above for waiver of prior notice and opportunity for public comment.

This action is required by § 679.82 and is exempt from review under Executive Order 12866.

Authority: 16 U.S.C. 1801 *et seq.*

Dated: July 20, 2010.

Carrie Selberg,

Acting Director, Office of Sustainable Fisheries, National Marine Fisheries Service.

[FR Doc. 2010–18114 Filed 7–20–10; 4:15 pm]

BILLING CODE 3510–22–S

Proposed Rules

Federal Register
Vol. 75, No. 141
Friday, July 23, 2010

This section of the FEDERAL REGISTER contains notices to the public of the proposed issuance of rules and regulations. The purpose of these notices is to give interested persons an opportunity to participate in the rule making prior to the adoption of the final rules.

DEPARTMENT OF TRANSPORTATION

Federal Aviation Administration

14 CFR Part 39

[Docket No. FAA–2010–0699; Directorate Identifier 2009–NM–236–AD]

RIN 2120–AA64

Airworthiness Directives; Viking Air Limited (Type Certificate Previously Held by Bombardier, Inc.) Model DHC–7 Airplanes

AGENCY: Federal Aviation Administration (FAA), DOT.

ACTION: Notice of proposed rulemaking (NPRM).

SUMMARY: We propose to adopt a new airworthiness directive (AD) for the products listed above. This proposed AD results from mandatory continuing airworthiness information (MCAI) originated by an aviation authority of another country to identify and correct an unsafe condition on an aviation product. The MCAI describes the unsafe condition as:

Viking Air Limited has completed a system safety review of the aircraft fuel system against fuel tank safety standards introduced in Chapter 525 of the Airworthiness Manual through Notice of Proposed Amendment (NPA) 2002–043. The identified non-compliances were then assessed using Transport Canada Policy Letter No. 525–001, to determine if mandatory corrective action is required.

The assessment showed that supplemental maintenance tasks would be required to prevent potential ignition sources within the fuel system, which could result in a fuel tank explosion. * * *

The proposed AD would require actions that are intended to address the unsafe condition described in the MCAI.

DATES: We must receive comments on this proposed AD by September 7, 2010.

ADDRESSES: You may send comments by any of the following methods:

- *Federal eRulemaking Portal:* Go to *http://www.regulations.gov.* Follow the instructions for submitting comments.
- *Fax:* (202) 493–2251.
- *Mail:* U.S. Department of Transportation, Docket Operations, M–30, West Building Ground Floor, Room W12–140, 1200 New Jersey Avenue, SE., Washington, DC 20590.
- *Hand Delivery:* U.S. Department of Transportation, Docket Operations, M–30, West Building Ground Floor, Room W12–40, 1200 New Jersey Avenue, SE., Washington, DC, between 9 a.m. and 5 p.m., Monday through Friday, except Federal holidays.

For service information identified in this proposed AD, contact Viking Air Limited, 9574 Hampden Road, Sidney, British Columbia V8L 8V5, Canada; telephone 250–656–7227; fax 250–656–0673; e-mail *technical.publications@vikingair.com*; Internet *http://www.vikingair.com.* You may review copies of the referenced service information at the FAA, Transport Airplane Directorate, 1601 Lind Avenue, SW., Renton, Washington. For information on the availability of this material at the FAA, call 425–227–1221.

Examining the AD Docket

You may examine the AD docket on the Internet at *http://www.regulations.gov*; or in person at the Docket Operations office between 9 a.m. and 5 p.m., Monday through Friday, except Federal holidays. The AD docket contains this proposed AD, the regulatory evaluation, any comments received, and other information. The street address for the Docket Operations office (telephone (800) 647–5527) is in the **ADDRESSES** section. Comments will be available in the AD docket shortly after receipt.

FOR FURTHER INFORMATION CONTACT: Richard Fiesel, Aerospace Engineer, Airframe and Mechanical Systems Branch, ANE–171, FAA, New York Aircraft Certification Office, 1600 Stewart Avenue, Suite 410, Westbury, New York 11590; telephone (516) 228–7304; fax (516) 794–5531.

SUPPLEMENTARY INFORMATION:

Comments Invited

We invite you to send any written relevant data, views, or arguments about this proposed AD. Send your comments to an address listed under the **ADDRESSES** section. Include "Docket No. FAA–2010–0699; Directorate Identifier 2009–NM–236–AD" at the beginning of your comments. We specifically invite comments on the overall regulatory, economic, environmental, and energy aspects of this proposed AD. We will consider all comments received by the closing date and may amend this proposed AD based on those comments.

We have lengthened the 30-day comment period for proposed ADs that address MCAI originated by aviation authorities of other countries to provide adequate time for interested parties to submit comments. The comment period for these proposed ADs is now typically 45 days, which is consistent with the comment period for domestic transport ADs.

We will post all comments we receive, without change, to *http://www.regulations.gov,* including any personal information you provide. We will also post a report summarizing each substantive verbal contact we receive about this proposed AD.

Discussion

The FAA has examined the underlying safety issues involved in fuel tank explosions on several large transport airplanes, including the adequacy of existing regulations, the service history of airplanes subject to those regulations, and existing maintenance practices for fuel tank systems. As a result of those findings, we issued a regulation titled "Transport Airplane Fuel Tank System Design Review, Flammability Reduction and Maintenance and Inspection Requirements" (66 FR 23086, May 7, 2001). In addition to new airworthiness standards for transport airplanes and new maintenance requirements, this rule included Special Federal Aviation Regulation No. 88 ("SFAR 88," Amendment 21–78, and subsequent Amendments 21–82 and 21–83).

Among other actions, SFAR 88 requires certain type design (*i.e.,* type certificate (TC) and supplemental type certificate (STC)) holders to substantiate that their fuel tank systems can prevent ignition sources in the fuel tanks. This requirement applies to type design holders for large turbine-powered transport airplanes and for subsequent modifications to those airplanes. It requires them to perform design reviews and to develop design changes and maintenance procedures if their designs do not meet the new fuel tank safety standards. As explained in the preamble to the rule, we intended to adopt

airworthiness directives to mandate any changes found necessary to address unsafe conditions identified as a result of these reviews.

In evaluating these design reviews, we have established four criteria intended to define the unsafe conditions associated with fuel tank systems that require corrective actions. The percentage of operating time during which fuel tanks are exposed to flammable conditions is one of these criteria. The other three criteria address the failure types under evaluation: Single failures, single failures in combination with a latent condition(s), and in-service failure experience. For all four criteria, the evaluations included consideration of previous actions taken that may mitigate the need for further action.

We have determined that the actions identified in this AD are necessary to reduce the potential of ignition sources inside fuel tanks, which, in combination with flammable fuel vapors, could result in fuel tank explosions and consequent loss of the airplane.

Transport Canada Civil Aviation (TCCA), which is the aviation authority for Canada, has issued Canadian Airworthiness Directive CF–2009–15, dated April 17, 2009 (referred to after this as "the MCAI"), to correct an unsafe condition for the specified products. The MCAI states:

> Viking Air Limited has completed a system safety review of the aircraft fuel system against fuel tank safety standards introduced in Chapter 525 of the Airworthiness Manual through Notice of Proposed Amendment (NPA) 2002–043. The identified non-compliances were then assessed using Transport Canada Policy Letter No. 525–001, to determine if mandatory corrective action is required.
>
> The assessment showed that supplemental maintenance tasks would be required to prevent potential ignition sources within the fuel system, which could result in a fuel tank explosion. Viking Air Limited has revised Chapter 5 of the DHC–7 Maintenance Manual, PSM 1–7–2, to introduce the required maintenance tasks.

The corrective action is revising the Airworthiness Limitations Section of the Instructions for Continued Airworthiness to incorporate new limitations for fuel tank systems. You may obtain further information by examining the MCAI in the AD docket.

Relevant Service Information

Viking Air Limited has issued Temporary Revisions 5–106, 5–107, 5–108, 5–109, 5–110, 5–111, 5–112, and 5–113, all dated December 15, 2008, to the Viking DHC–7 Dash 7 Maintenance Manual, PSM–1–7–2, Chapter 5. The actions described in this service information are intended to correct the unsafe condition identified in the MCAI.

FAA's Determination and Requirements of This Proposed AD

This product has been approved by the aviation authority of another country, and is approved for operation in the United States. Pursuant to our bilateral agreement with the State of Design Authority, we have been notified of the unsafe condition described in the MCAI and service information referenced above. We are proposing this AD because we evaluated all pertinent information and determined an unsafe condition exists and is likely to exist or develop on other products of the same type design.

Differences Between This AD and the MCAI or Service Information

We have reviewed the MCAI and related service information and, in general, agree with their substance. But we might have found it necessary to use different words from those in the MCAI to ensure the AD is clear for U.S. operators and is enforceable. In making these changes, we do not intend to differ substantively from the information provided in the MCAI and related service information.

We might also have proposed different actions in this AD from those in the MCAI in order to follow FAA policies. Any such differences are highlighted in a Note within the proposed AD.

Costs of Compliance

Based on the service information, we estimate that this proposed AD would affect about 11 products of U.S. registry. We also estimate that it would take about 1 work-hour per product to comply with the basic requirements of this proposed AD. The average labor rate is $85 per work-hour. Based on these figures, we estimate the cost of the proposed AD on U.S. operators to be $935, or $85 per product.

Authority for This Rulemaking

Title 49 of the United States Code specifies the FAA's authority to issue rules on aviation safety. Subtitle I, section 106, describes the authority of the FAA Administrator. "Subtitle VII: Aviation Programs,"describes in more detail the scope of the Agency's authority.

We are issuing this rulemaking under the authority described in "Subtitle VII, Part A, Subpart III, Section 44701: General requirements."Under that section, Congress charges the FAA with promoting safe flight of civil aircraft in air commerce by prescribing regulations for practices, methods, and procedures the Administrator finds necessary for safety in air commerce. This regulation is within the scope of that authority because it addresses an unsafe condition that is likely to exist or develop on products identified in this rulemaking action.

Regulatory Findings

We determined that this proposed AD would not have federalism implications under Executive Order 13132. This proposed AD would not have a substantial direct effect on the States, on the relationship between the national Government and the States, or on the distribution of power and responsibilities among the various levels of government.

For the reasons discussed above, I certify this proposed regulation:

1. Is not a "significant regulatory action"under Executive Order 12866;
2. Is not a "significant rule"under the DOT Regulatory Policies and Procedures (44 FR 11034, February 26, 1979); and
3. Will not have a significant economic impact, positive or negative, on a substantial number of small entities under the criteria of the Regulatory Flexibility Act.

We prepared a regulatory evaluation of the estimated costs to comply with this proposed AD and placed it in the AD docket.

List of Subjects in 14 CFR Part 39

Air transportation, Aircraft, Aviation safety, Incorporation by reference, Safety.

The Proposed Amendment

Accordingly, under the authority delegated to me by the Administrator, the FAA proposes to amend 14 CFR part 39 as follows:

PART 39—AIRWORTHINESS DIRECTIVES

1. The authority citation for part 39 continues to read as follows:

Authority: 49 U.S.C. 106(g), 40113, 44701.

§ 39.13 [Amended]

2. The FAA amends § 39.13 by adding the following new AD:

Viking Air Limited (Type Certificate Previously Held by Bombardier, Inc.): Docket No. FAA–2010–0699; Directorate Identifier 2009–NM–236–AD.

Comments Due Date

(a) We must receive comments by September 7, 2010.

Affected ADs

(b) None.

Applicability

(c) This AD applies to Viking Air Limited (Type Certificate previously held by Bombardier, Inc.) Model DHC–7–1, DHC–7–100, DHC–7–101, DHC–7–102, and DHC–7–103 airplanes; certificated in any category.

Subject

(d) Air Transport Association (ATA) of America Code 28: Fuel.

Reason

(e) The mandatory continuing airworthiness information (MCAI) states:

Viking Air Limited has completed a system safety review of the aircraft fuel system against fuel tank safety standards introduced in Chapter 525 of the Airworthiness Manual through Notice of Proposed Amendment (NPA) 2002–043. The identified non-compliances were then assessed using Transport Canada Policy Letter No. 525–001, to determine if mandatory corrective action is required.

The assessment showed that supplemental maintenance tasks would be required to prevent potential ignition sources within the fuel system, which could result in a fuel tank explosion. * * *

The corrective action is revising the Airworthiness Limitations Section of the Instructions for Continued Airworthiness to incorporate new limitations for fuel tank systems.

Compliance

(f) You are responsible for having the actions required by this AD performed within the compliance times specified, unless the actions have already been done.

Actions

(g) Within 60 days after the effective date of this AD, incorporate all the fuel system limitation (FSL) tasks as specified in the temporary revisions (TR) listed in Table 1 of this AD, to Chapter 5 of the Viking DHC–7 Dash 7 Maintenance Manual (MM), PSM 1–7–2; and incorporate Section 5–10–30, as specified in Viking Air Limited TR 5–106, dated December 15, 2008, to Chapter 5 of the Viking DHC–7 Dash 7 MM.

Note 1: This may be done by inserting copies of the TRs identified in paragraph (g) of this AD in the MM. When these TRs have been included in general revisions of the MM, the general revisions may be inserted in the MM, provided the relevant information in the general revision is identical to that in the TRs identified in paragraph (g) of this AD.

(h) At the applicable time in paragraphs (h)(1), (h)(2), (h)(3), and (h)(4) of this AD, do the initial inspections in accordance with the applicable TR identified in Table 1 of this AD.

(1) For Tasks FSL–01, FSL–02, FSL–03, FSL–04 and FSL–05: Inspect at the later of the times in paragraphs (h)(1)(i) and (h)(1)(ii) of this AD.

(i) Prior to the accumulation of 18,000 total flight hours.

(ii) Within 6,000 flight hours or within 36 months after the effective date of this AD, whichever occurs first.

(2) For Task FSL–06: Inspect at the later of the times in paragraphs (h)(2)(i) and (h)(2)(ii) of this AD.

(i) Prior to the accumulation of 40,000 total flight hours.

(ii) Within 6,000 flight hours or within 36 months after the effective date of this AD, whichever occurs first.

(3) For Task FSL–07: Within 1 month after the effective date of this AD.

(4) For Task FSL–08: Inspect at the later of the times in paragraphs (h)(4)(i) and (h)(4)(ii) of this AD.

(i) Prior to the accumulation of 4,000 total flight hours.

(ii) Within 2,000 flight hours or within 12 months after the effective date of this AD, whichever occurs first.

TABLE 1—TEMPORARY REVISIONS

Task	Viking Air Limited TR	Date
FSL–01	5–107	December 15, 2008.
FSL–02	5–108	December 15, 2008.
FLS–06	5–109	December 15, 2008.
FSL–07	5–110	December 15, 2008.
FSL–08	5–111	December 15, 2008.
FSL–03	5–112	December 15, 2008.
FSL–04 and FSL–05	5–113	December 15, 2008.

FAA AD Differences

Note 2: This AD differs from the MCAI and/or service information as follows: No differences.

Other FAA AD Provisions

(i) The following provisions also apply to this AD:

(1) Alternative Methods of Compliance (AMOCs): The Manager, New York Aircraft Certification Office (ACO), ANE–170, FAA, has the authority to approve AMOCs for this AD, if requested using the procedures found in 14 CFR 39.19. Send information to ATTN: Program Manager, Continuing Operational Safety, FAA, New York ACO, 1600 Stewart Avenue, Suite 410, Westbury, New York, 11590; telephone 516–228–7300; fax 516–794–5531. Before using any approved AMOC on any airplane to which the AMOC applies, notify your principal maintenance inspector (PMI) or principal avionics inspector (PAI), as appropriate, or lacking a principal inspector, your local Flight Standards District Office. The AMOC approval letter must specifically reference this AD.

(2) Airworthy Product: For any requirement in this AD to obtain corrective actions from a manufacturer or other source, use these actions if they are FAA-approved. Corrective actions are considered FAA-approved if they are approved by the State of Design Authority (or their delegated agent). You are required to assure the product is airworthy before it is returned to service.

(3) Reporting Requirements: For any reporting requirement in this AD, under the provisions of the Paperwork Reduction Act (44 U.S.C. 3501 *et seq.*), the Office of Management and Budget (OMB) has approved the information collection requirements and has assigned OMB Control Number 2120–0056.

Related Information

(j) Refer to MCAI Canadian Airworthiness Directive CF–2009–15, dated April 17, 2009; and the TRs identified in Table 2 of this AD for related information.

TABLE 2—SERVICE INFORMATION

Viking Air Limited TR—	To the—	Dated—
5–106	Viking DHC–7 Dash 7 MM, PSM 1–7–2	December 15, 2008.
5–107	Viking DHC–7 Dash 7 MM, PSM 1–7–2	December 15, 2008.
5–108	Viking DHC–7 Dash 7 MM, PSM 1–7–2	December 15, 2008.
5–109	Viking DHC–7 Dash 7 MM, PSM 1–7–2	December 15, 2008.
5–110	Viking DHC–7 Dash 7 MM, PSM 1–7–2	December 15, 2008.
5–111	Viking DHC–7 Dash 7 MM, PSM 1–7–2	December 15, 2008.
5–112	Viking DHC–7 Dash 7 MM, PSM 1–7–2	December 15, 2008.

TABLE 2—SERVICE INFORMATION—Continued

Viking Air Limited TR—	To the—	Dated—
5–113	Viking DHC–7 Dash 7 MM, PSM 1–7–2	December 15, 2008.

Issued in Renton, Washington, on July 15, 2010.

Ali Bahrami,

Manager, Transport Airplane Directorate, Aircraft Certification Service.

[FR Doc. 2010–18059 Filed 7–22–10; 8:45 am]

BILLING CODE 4910–13–P

DEPARTMENT OF TRANSPORTATION

Federal Aviation Administration

14 CFR Part 39

[Docket No. FAA–2010–0737; Directorate Identifier 2010–CE–037–AD]

RIN 2120–AA64

Airworthiness Directives; PIAGGIO AERO INDUSTRIES S.p.A. Model PIAGGIO P–180 Airplanes

AGENCY: Federal Aviation Administration (FAA), Department of Transportation (DOT).

ACTION: Notice of proposed rulemaking (NPRM).

SUMMARY: We propose to adopt a new airworthiness directive (AD) for the products listed above. This proposed AD results from mandatory continuing airworthiness information (MCAI) originated by an aviation authority of another country to identify and correct an unsafe condition on an aviation product. The MCAI describes the unsafe condition as:

Some cases of failure of engine oil dipsticks, installed on Pratt & Whitney Canada (P&WC) PT6A66 and PT6A66B engines, were detected on P.180 aeroplanes; such failures, due to moisture penetration into the dipstick and subsequent corrosion, can cause incorrect reading of the engine oil low level on the Refuel/Ground Test Panel.

If left uncorrected, this situation could lead to in-flight engine failure(s). The proposed AD would require actions that are intended to address the unsafe condition described in the MCAI.

DATES: We must receive comments on this proposed AD by September 7, 2010.

ADDRESSES: You may send comments by any of the following methods:

- *Federal eRulemaking Portal:* Go to *http://www.regulations.gov.* Follow the instructions for submitting comments.
- *Fax:* (202) 493–2251.
- *Mail:* U.S. Department of Transportation, Docket Operations, M–30, West Building Ground Floor, Room W12–140, 1200 New Jersey Avenue, SE., Washington, DC 20590.
- *Hand Delivery:* U.S. Department of Transportation, Docket Operations, M–30, West Building Ground Floor, Room W12–140, 1200 New Jersey Avenue, SE., Washington, DC 20590, between 9 a.m. and 5 p.m., Monday through Friday, except Federal holidays.

Examining the AD Docket

You may examine the AD docket on the Internet at *http://www.regulations.gov;* or in person at the Docket Management Facility between 9 a.m. and 5 p.m., Monday through Friday, except Federal holidays. The AD docket contains this proposed AD, the regulatory evaluation, any comments received, and other information. The street address for the Docket Office (telephone (800) 647–5527) is in the **ADDRESSES** section. Comments will be available in the AD docket shortly after receipt.

FOR FURTHER INFORMATION CONTACT: Sarjapur Nagarajan, Aerospace Engineer, FAA, Small Airplane Directorate, 901 Locust, Room 301, Kansas City, Missouri 64106; telephone: (816) 329–4145; fax: (816) 329–4090.

SUPPLEMENTARY INFORMATION:

Comments Invited

We invite you to send any written relevant data, views, or arguments about this proposed AD. Send your comments to an address listed under the **ADDRESSES** section. Include "Docket No. FAA–2010–0737; Directorate Identifier 2010–CE–037–AD" at the beginning of your comments. We specifically invite comments on the overall regulatory, economic, environmental, and energy aspects of this proposed AD. We will consider all comments received by the closing date and may amend this proposed AD because of those comments.

We will post all comments we receive, without change, to *http://www.regulations.gov,* including any personal information you provide. We will also post a report summarizing each substantive verbal contact we receive about this proposed AD.

Discussion

The European Aviation Safety Agency (EASA), which is the Technical Agent for the Member States of the European Community, has issued AD No.: 2010–0123, dated June 22, 2010 (referred to after this as "the MCAI"), to correct an unsafe condition for the specified products. The MCAI states:

Some cases of failure of engine oil dipsticks, installed on Pratt & Whitney Canada (P&WC) PT6A66 and PT6A66B engines, were detected on P.180 aeroplanes; such failures, due to moisture penetration into the dipstick and subsequent corrosion, can cause incorrect reading of the engine oil low level on the Refuel/Ground Test Panel.

If left uncorrected, this situation could lead to in-flight engine failure(s).

This AD requires:

(1) Repetitive visual checks of the engine oil levels to prevent an undetected low level condition;

(2) repetitive inspections of the oil dipsticks to detect faulty units;

(3) replacement of faulty oil dipsticks or visual checks of the oil level at reduced not to exceed intervals, until replacement of faulty units.

The engine TC Holder is currently developing a modification that will address the unsafe condition identified in this AD; once such modification is developed, approved and available, further mandatory actions might be considered.

This Correction is issued to amend the AD number heading: it was PAD, it is AD.

Relevant Service Information

PIAGGIO AERO INDUSTRIES S.p.A. has issued Service Bulletin (Mandatory) N.: 80–0287, Rev. N. 1, dated March 24, 2010. The actions described in this service information are intended to correct the unsafe condition identified in the MCAI.

FAA's Determination and Requirements of the Proposed AD

This product has been approved by the aviation authority of another country, and is approved for operation in the United States. Pursuant to our bilateral agreement with this State of Design Authority, they have notified us of the unsafe condition described in the MCAI and service information referenced above. We are proposing this AD because we evaluated all information and determined the unsafe condition exists and is likely to exist or develop on other products of the same type design.

Differences Between This Proposed AD and the MCAI or Service Information

We have reviewed the MCAI and related service information and, in

general, agree with their substance. But we might have found it necessary to use different words from those in the MCAI to ensure the AD is clear for U.S. operators and is enforceable. In making these changes, we do not intend to differ substantively from the information provided in the MCAI and related service information.

We might also have proposed different actions in this AD from those in the MCAI in order to follow FAA policies. Any such differences are highlighted in a Note within the proposed AD.

Costs of Compliance

We estimate that this proposed AD will affect 99 products of U.S. registry. We also estimate that it would take about 2.5 work-hours per product to comply with the basic requirements of this proposed AD. The average labor rate is $85 per work-hour.

Based on these figures, we estimate the cost of the proposed AD on U.S. operators to be $21,038, or $212.50 per product.

In addition, we estimate that any necessary follow-on actions to replace both dipsticks would take about 1 work-hour and require parts costing $9,000, for a cost of $9,085 per product. We have no way of determining the number of products that may need these actions.

Authority for This Rulemaking

Title 49 of the United States Code specifies the FAA's authority to issue rules on aviation safety. Subtitle I, section 106, describes the authority of the FAA Administrator. "Subtitle VII: Aviation Programs," describes in more detail the scope of the Agency's authority.

We are issuing this rulemaking under the authority described in "Subtitle VII, Part A, Subpart III, Section 44701: General requirements." Under that section, Congress charges the FAA with promoting safe flight of civil aircraft in air commerce by prescribing regulations for practices, methods, and procedures the Administrator finds necessary for safety in air commerce. This regulation is within the scope of that authority because it addresses an unsafe condition that is likely to exist or develop on products identified in this rulemaking action.

Regulatory Findings

We determined that this proposed AD would not have federalism implications under Executive Order 13132. This proposed AD would not have a substantial direct effect on the States, on the relationship between the national Government and the States, or on the distribution of power and responsibilities among the various levels of government.

For the reasons discussed above, I certify this proposed regulation:

1. Is not a "significant regulatory action" under Executive Order 12866;

2. Is not a "significant rule" under the DOT Regulatory Policies and Procedures (44 FR 11034, February 26, 1979); and

3. Will not have a significant economic impact, positive or negative, on a substantial number of small entities under the criteria of the Regulatory Flexibility Act.

We prepared a regulatory evaluation of the estimated costs to comply with this proposed AD and placed it in the AD docket.

List of Subjects in 14 CFR Part 39

Air transportation, Aircraft, Aviation safety, Incorporation by reference, Safety.

The Proposed Amendment

Accordingly, under the authority delegated to me by the Administrator, the FAA proposes to amend 14 CFR part 39 as follows:

PART 39—AIRWORTHINESS DIRECTIVES

1. The authority citation for part 39 continues to read as follows:

Authority: 49 U.S.C. 106(g), 40113, 44701.

§ 39.13 [Amended]

2. The FAA amends § 39.13 by adding the following new AD:

Piaggio Aero Industries S.p.A.: Docket No. FAA–2010–0737; Directorate Identifier 2010–CE–037–AD.

Comments Due Date

(a) We must receive comments by September 7, 2010.

Affected ADs

(b) None.

Applicability

(c) This AD applies to PIAGGIO AERO INDUSTRIES S.p.A. Model PIAGGIO P–180 airplanes, all serial numbers, certificated in any category.

Subject

(d) Air Transport Association of America (ATA) Code 79: Engine Oil.

Reason

(e) The mandatory continuing airworthiness information (MCAI) states:

Some cases of failure of engine oil dipsticks, installed on Pratt & Whitney Canada (P&WC) PT6A66 and PT6A66B engines, were detected on P.180 aeroplanes; such failures, due to moisture penetration into the dipstick and subsequent corrosion, can cause incorrect reading of the engine oil low level on the Refuel/Ground Test Panel. If left uncorrected, this situation could lead to in-flight engine failure(s).

This AD requires:

(1) Repetitive visual checks of the engine oil levels to prevent an undetected low level condition;

(2) repetitive inspections of the oil dipsticks to detect faulty units;

(3) replacement of faulty oil dipsticks or visual checks of the oil level at reduced not to exceed intervals, until replacement of faulty units.

The engine TC Holder is currently developing a modification that will address the unsafe condition identified in this AD; once such modification is developed, approved and available, further mandatory actions might be considered.

This Correction is issued to amend the AD number heading: it was PAD, it is AD.

Actions and Compliance

(f) Unless already done, do the following actions:

(1) Within one month after the effective date of this AD or within 25 hours time-in-service (TIS) after the effective date of this AD, whichever occurs first, and repetitively thereafter at intervals not to exceed one month or 25 hours TIS, whichever occurs first, do the following in both engines:

(i) Visually check the oil level following the Accomplishment Instructions, Part A, of PIAGGIO AERO INDUSTRIES S.p.A. Service Bulletin (Mandatory) N.: 80–0287, Rev. N. 1, dated March 24, 2010; and

(ii) Do a functional check and inspection of the dipstick following the Accomplishment Instructions, Part B and C, of PIAGGIO AERO INDUSTRIES S.p.A. Service Bulletin (Mandatory) N.: 80–0287, Rev. N. 1, dated March 24, 2010.

(2) If, as determined by the inspection in paragraph (f)(1)(ii) of this AD, the installed dipsticks are compliant with P&WC Service Bulletin No. 14383, the repetitive inspections required in paragraph (f)(1) of this AD may be done at intervals not to exceed one month or 50 hours TIS, whichever occurs first.

(3) If a failed dipstick is found during any functional check required in paragraph (f)(1)(ii) of this AD, do one of the following;

(i) If a replacement dipstick is available, replace it before further flight; or

(ii) If a replacement dipstick is not available, the failed dipstick may be reinstalled, but, until replacement, the oil level check specified in paragraph (f)(1)(i) of this AD must be repetitively done in the affected engine within 5 hours TIS from the last check. The repetitive oil level check interval may be extended to 10 hours TIS based on oil consumption in accordance with the Accomplishment Instructions, Part B, of PIAGGIO AERO INDUSTRIES S.p.A. Service Bulletin (Mandatory) N.: 80–0287, Rev. N. 1, dated March 24, 2010.

(4) Replacement of the oil level dipstick does not terminate the repetitive check requirements of paragraph (f)(1) of this AD.

FAA AD Differences

Note: This AD differs from the MCAI and/or service information as follows: No differences.

Other FAA AD Provisions

(g) The following provisions also apply to this AD:

(1) *Alternative Methods of Compliance (AMOCs):* The Manager, Standards Office, FAA, has the authority to approve AMOCs for this AD, if requested using the procedures found in 14 CFR 39.19. Send information to ATTN: Sarjapur Nagarajan, Aerospace Engineer, FAA, Small Airplane Directorate, 901 Locust, Room 301, Kansas City, Missouri 64106; telephone: (816) 329–4145; fax: (816) 329–4090. Before using any approved AMOC on any airplane to which the AMOC applies, notify your appropriate principal inspector (PI) in the FAA Flight Standards District Office (FSDO), or lacking a PI, your local FSDO.

(2) *Airworthy Product:* For any requirement in this AD to obtain corrective actions from a manufacturer or other source, use these actions if they are FAA-approved. Corrective actions are considered FAA-approved if they are approved by the State of Design Authority (or their delegated agent). You are required to assure the product is airworthy before it is returned to service.

(3) *Reporting Requirements:* For any reporting requirement in this AD, under the provisions of the Paperwork Reduction Act (44 U.S.C. 3501 et seq.), the Office of Management and Budget (OMB) has approved the information collection requirements and has assigned OMB Control Number 2120–0056.

Related Information

(h) Refer to MCAI European Aviation Safety Agency (EASA) AD No.: 2010–0123, dated June 22, 2010; and PIAGGIO AERO INDUSTRIES S.p.A. Service Bulletin (Mandatory) N.: 80–0287, Rev. N. 1, dated March 24, 2010, for related information.

Issued in Kansas City, Missouri, on July 16, 2010.

Kim Smith,

Manager, Small Airplane Directorate, Aircraft Certification Service.

[FR Doc. 2010–18061 Filed 7–22–10; 8:45 am]

BILLING CODE 4910–13–P

DEPARTMENT OF TRANSPORTATION

Federal Aviation Administration

14 CFR Part 39

[Docket No. FAA–2010–0698; Directorate Identifier 2009–NM–264–AD]

RIN 2120–AA64

Airworthiness Directives; The Boeing Company Model 757 Airplanes

AGENCY: Federal Aviation Administration (FAA), Department of Transportation (DOT).

ACTION: Notice of proposed rulemaking (NPRM).

SUMMARY: The FAA proposes to supersede an existing airworthiness directive (AD) that applies to all Model 757 airplanes. The existing AD currently requires sealing the fasteners on the front and rear spars inside the left and right main fuel tanks and on the rear spar and lower panel of the center fuel tank. That AD also requires inspections of the wire bundle support installations to verify if certain clamps are installed and if Teflon sleeving covers the wire bundles inside the left and right equipment cooling system bays, on the left and right rear spars, and on the left and right front spars; and corrective actions if necessary. This proposed AD would also require sealing the additional fasteners on the rear spar inside the left and right main fuel tanks. This proposed AD results from a fuel system review conducted by the manufacturer. We have received reports from the manufacturer that additional fasteners in the main fuel tanks must be sealed for lightning strike protection. We are proposing this AD to detect and correct improper wire bundle support installation and sleeving and to prevent improperly sealed fasteners in the main and center fuel tanks from becoming an ignition source, in the event of a fault current or lightning strike, which could result in a fuel tank explosion and consequent loss of the airplane.

DATES: We must receive comments on this proposed AD by September 7, 2010.

ADDRESSES: You may send comments by any of the following methods:

- *Federal eRulemaking Portal:* Go to *http://www.regulations.gov.* Follow the instructions for submitting comments.
- *Fax:* 202–493–2251.
- *Mail:* U.S. Department of Transportation, Docket Operations, M–30, West Building Ground Floor, Room W12–140, 1200 New Jersey Avenue, SE., Washington, DC 20590.
- *Hand Delivery:* U.S. Department of Transportation, Docket Operations, M–30, West Building Ground Floor, Room W12–140, 1200 New Jersey Avenue, SE., Washington, DC 20590, between 9 a.m. and 5 p.m., Monday through Friday, except Federal holidays.

For service information identified in this proposed AD, contact Boeing Commercial Airplanes, Attention: Data & Services Management, P. O. Box 3707, MC 2H–65, Seattle, Washington 98124–2207; telephone 206–544–5000, extension 1; fax 206–766–5680; e-mail *me.boecom@boeing.com;* Internet *https://www.myboeingfleet.com.* You may review copies of the referenced service information at the FAA, Transport Airplane Directorate, 1601 Lind Avenue, SW., Renton, Washington. For information on the availability of this material at the FAA, call 425–227–1221.

Examining the AD Docket

You may examine the AD docket on the Internet at *http://www.regulations.gov;* or in person at the Docket Management Facility between 9 a.m. and 5 p.m., Monday through Friday, except Federal holidays. The AD docket contains this proposed AD, the regulatory evaluation, any comments received, and other information. The street address for the Docket Office (telephone 800–647–5527) is in the **ADDRESSES** section. Comments will be available in the AD docket shortly after receipt.

FOR FURTHER INFORMATION CONTACT: Tak Kobayashi, Aerospace Engineer, Propulsion Branch, ANM–140S, FAA, Seattle Aircraft Certification Office, 1601 Lind Avenue, SW., Renton, Washington 98057–3356; telephone (425) 917–6499; fax (425) 917–6590.

SUPPLEMENTARY INFORMATION:

Comments Invited

We invite you to send any written relevant data, views, or arguments about this proposed AD. Send your comments to an address listed under the **ADDRESSES** section. Include "Docket No. FAA–2010–0698; Directorate Identifier 2009–NM–264–AD" at the beginning of your comments. We specifically invite comments on the overall regulatory, economic, environmental, and energy aspects of this proposed AD. We will consider all comments received by the closing date and may amend this proposed AD because of those comments.

We will post all comments we receive, without change, to *http://www.regulations.gov,* including any personal information you provide. We will also post a report summarizing each substantive verbal contact we receive about this proposed AD.

Discussion

On October 24, 2008, we issued AD 2008–23–19, Amendment 39–15740 (73 FR 71534, November 25, 2008), for all Model 757 series airplanes. That AD requires sealing the fasteners on the front and rear spars inside the left and right main fuel tanks and on the rear spar and lower panel of the center fuel tank. That AD also requires inspections of the wire bundle support installations to verify if certain clamps are installed and if Teflon sleeving covers the wire bundles inside the left and right equipment cooling system bays, on the left and right rear spars, and on the left and right front spars; and corrective actions if necessary. That AD resulted

from a fuel system review conducted by the manufacturer. We issued that AD to detect and correct improper wire bundle support installation and sleeving and to prevent improperly sealed fasteners in the main and center fuel tanks from becoming an ignition source, in the event of a fault current, which could result in a fuel tank explosion and consequent loss of the airplane.

Clarification of Applicability

The applicability of AD 2008–23–19 refers to Model 757–200, –200CB, –200PF, and –300 series airplanes, as identified in Boeing Alert Service Bulletin 757–57A0064, dated July 16, 2007. Since that service bulletin affects all Model 757 airplanes, we have revised paragraph (c) of this AD to include all Model 757 airplanes.

Actions Since Existing AD Was Issued

Since we issued AD 2008–23–19, we have received reports that it is possible for some fuel tank fasteners, in the event of a lightning strike, to become an ignition source. Additional fasteners in the main fuel tanks must be sealed for lightning strike protection.

Relevant Service Information

AD 2008–23–19 referred to Boeing Alert Service Bulletin 757–57A0064, dated July 16, 2007, as the appropriate source of service information for the required actions. Boeing has since revised the service bulletin. Boeing Alert Service Bulletin 757–57A0064, Revision 1, dated October 5, 2009, identifies additional fasteners on the rear spar inside the left and right main fuel tanks that must be sealed.

FAA's Determination and Requirements of the Proposed AD

We have evaluated all pertinent information and identified an unsafe condition that is likely to develop on other airplanes of the same type design. For this reason, we are proposing this AD, which would supersede AD 2008–23–19 and would retain the requirements of the existing AD. This proposed AD would require accomplishing the actions specified in the Relevant Service Information described previously.

Change to Existing AD

This proposed AD would retain all requirements of AD 2008–23–19. Since AD 2008–23–19 was issued, the AD format has been revised, and certain paragraphs have been rearranged. As a result, the corresponding paragraph identifiers have changed in this proposed AD, as listed in the following table:

REVISED PARAGRAPH IDENTIFIERS

Requirement in AD 2008–23–19	Corresponding requirement in this proposed AD
paragraph (d)	paragraph (e)
paragraph (e)	paragraph (f)
paragraph (f)	paragraph (g)

Costs of Compliance

There are about 1,036 airplanes of the affected design in the worldwide fleet. The following table provides the estimated costs for U.S. operators to comply with this proposed AD.

ESTIMATED COSTS

Action	Work hours	Average labor rate per hour	Parts	Cost per airplane	Number of U.S.-registered airplanes	Fleet cost
Fastener Sealing and Inspections (required by AD 2008-23-19).	Up to 545 hours per airplane depending on airplane configuration.	$85	$325	$46,650	667	$31,115,550
Main Tank Fastener Sealing (new proposed action).	30	85	0	2,550	667	1,700,850

Authority for This Rulemaking

Title 49 of the United States Code specifies the FAA's authority to issue rules on aviation safety. Subtitle I, section 106, describes the authority of the FAA Administrator. Subtitle VII, Aviation Programs, describes in more detail the scope of the Agency's authority.

We are issuing this rulemaking under the authority described in subtitle VII, part A, subpart III, section 44701, "General requirements." Under that section, Congress charges the FAA with promoting safe flight of civil aircraft in air commerce by prescribing regulations for practices, methods, and procedures the Administrator finds necessary for safety in air commerce. This regulation is within the scope of that authority because it addresses an unsafe condition that is likely to exist or develop on products identified in this rulemaking action.

Regulatory Findings

We have determined that this proposed AD would not have federalism implications under Executive Order 13132. This proposed AD would not have a substantial direct effect on the States, on the relationship between the national Government and the States, or on the distribution of power and responsibilities among the various levels of government.

For the reasons discussed above, I certify that the proposed regulation:

1. Is not a "significant regulatory action" under Executive Order 12866;

2. Is not a "significant rule" under the DOT Regulatory Policies and Procedures (44 FR 11034, February 26, 1979); and

3. Will not have a significant economic impact, positive or negative, on a substantial number of small entities under the criteria of the Regulatory Flexibility Act.

We prepared a regulatory evaluation of the estimated costs to comply with this proposed AD and placed it in the AD docket. *See* the **ADDRESSES** section for a location to examine the regulatory evaluation.

List of Subjects in 14 CFR Part 39

Air transportation, Aircraft, Aviation safety, Incorporation by reference, Safety.

The Proposed Amendment

Accordingly, under the authority delegated to me by the Administrator, the FAA proposes to amend 14 CFR part 39 as follows:

PART 39—AIRWORTHINESS DIRECTIVES

1. The authority citation for part 39 continues to read as follows:

Authority: 49 U.S.C. 106(g), 40113, 44701.

§ 39.13 [Amended]

2. The FAA amends § 39.13 by removing Amendment 39–15740 (73 FR 71534, November 25, 2008), and adding the following new AD:

The Boeing Company: Docket No. FAA–2010–0698; Directorate Identifier 2009–NM–264–AD.

Comments Due Date

(a) The FAA must receive comments on this AD action by September 7, 2010.

Affected ADs

(b) This AD supersedes AD 2008–23–19, Amendment 39–15740.

Applicability

(c) This AD applies to all The Boeing Company Model 757–200, –200CB, –200PF, and –300 series airplanes, certificated in any category.

Subject

(d) Air Transport Association (ATA) of America Code 57: Wings.

Unsafe Condition

(e) This AD results from a fuel system review conducted by the manufacturer. We have received reports from the manufacturer that additional fasteners in the main fuel tanks must be sealed for lightning strike protection. The Federal Aviation Administration is issuing this AD to detect and correct improper wire bundle support installation and sleeving and to prevent improperly sealed fasteners in the main and center fuel tanks from becoming an ignition source, in the event of a fault current or lightning strike, which could result in a fuel tank explosion and consequent loss of the airplane.

Compliance

(f) You are responsible for having the actions required by this AD performed within the compliance times specified, unless the actions have already been done.

Restatement of Requirements of AD 2008–23–19, With Revised Service Information

Fastener Sealing and Inspections

(g) Within 60 months after December 30, 2008 (the effective date of AD 2008–23–19), seal the applicable fasteners and do the general visual inspections of the wire bundle support installations, and do all the applicable corrective actions before further flight, by accomplishing all of the applicable actions specified in the Accomplishment Instructions of Boeing Alert Service Bulletin 757–57A0064, dated July 16, 2007; or Part 1 through Part 10 of the Work Instructions of Boeing Alert Service Bulletin 757–57A0064, Revision 1, dated October 5, 2009.

New Requirements of This AD

Fastener Sealing on the Rear Spar

(h) For airplanes on which Boeing Alert Service Bulletin 757–57A0064, dated July 16, 2007, was done: Within 60 months after December 30, 2008 (the effective date of AD 2008–23–19), seal the fasteners on the rear spar inside the left and right main fuel tanks, in accordance with Part 11 of the Work Instructions of Boeing Alert Service Bulletin 757–57A0064, Revision 1, dated October 5, 2009.

Alternative Methods of Compliance (AMOCs)

(i)(1) The Manager, Seattle Aircraft Certification Office (ACO), FAA, has the authority to approve AMOCs for this AD, if requested using the procedures found in 14 CFR 39.19. Send information to ATTN: Tak Kobayashi, Aerospace Engineer, Propulsion Branch, ANM–140S, FAA, Seattle Aircraft Certification Office, 1601 Lind Avenue, SW., Renton, Washington 98057–3356; telephone (425) 917–6499; fax (425) 917–6590. Information may be e-mailed to: *9-ANM-Seattle-ACO-AMOC-Requests@faa.gov.*

(2) To request a different method of compliance or a different compliance time for this AD, follow the procedures in 14 CFR 39.19. Before using any approved AMOC on any airplane to which the AMOC applies, notify your principal maintenance inspector (PMI) or principal avionics inspector (PAI), as appropriate, or lacking a principal inspector, your local Flight Standards District Office. The AMOC approval letter must specifically reference this AD.

(3) AMOCs approved previously in accordance with AD 2008–23–19, Amendment 39–15740, are approved as AMOCs for the corresponding provisions of paragraph (g) of this AD.

Issued in Renton, Washington, on July 15, 2010.

Ali Bahrami,

Manager, Transport Airplane Directorate, Aircraft Certification Service.

[FR Doc. 2010–18017 Filed 7–22–10; 8:45 am]

BILLING CODE 4910–13–P

DEPARTMENT OF TRANSPORTATION

Federal Aviation Administration

14 CFR Part 39

[Docket No. FAA–2010–0732; Directorate Identifier 2010–NE–04–AD]

RIN 2120–AA64

Airworthiness Directives; General Electric Company (GE) CT7–9C and –9C3 Turboprop Engines

AGENCY: Federal Aviation Administration (FAA), DOT.

ACTION: Notice of proposed rulemaking (NPRM).

SUMMARY: The FAA proposes to adopt a new airworthiness directive (AD) for GE CT7–9C and –9C3 turboprop engines with certain serial number (S/N) gas generator turbine (GGT) shafts, part number (P/N) 6068T44P02, installed. This proposed AD would require inspecting the GGT shaft for nonconforming land balance-cuts, and if found, removing the shaft from service. This proposed AD results from reports of a manufacturing quality problem. We are proposing this AD to detect nonconforming GGT shaft land balance-cuts, which could result in the shaft failing before its published life limit, and which could result in an uncontained engine failure and damage to the airplane.

DATES: We must receive any comments on this proposed AD by September 21, 2010.

ADDRESSES: Use one of the following addresses to comment on this proposed AD.

- *Federal eRulemaking Portal:* Go to *http://www.regulations.gov* and follow the instructions for sending your comments electronically.
- *Mail:* Docket Management Facility, U.S. Department of Transportation, 1200 New Jersey Avenue, SE., West Building Ground Floor, Room W12–140, Washington, DC 20590–0001.
- *Hand Delivery:* Deliver to Mail address above between 9 a.m. and 5 p.m., Monday through Friday, except Federal holidays.
- *Fax:* (202) 493–2251.

Contact General Electric Company, GE–Aviation, Room 285, 1 Newmann Way, Cincinnati, Ohio 45215; e-mail *geae.aoc@ge.com;* telephone (513) 552–3272; fax (513) 552–3329, for a copy of the service information identified in this proposed AD.

FOR FURTHER INFORMATION CONTACT: Barbara Caufield, Aerospace Engineer, Engine Certification Office, FAA, Engine & Propeller Directorate, 12 New England Executive Park, Burlington, MA 01803; e-mail: *barbara.caufield@faa.gov;* telephone (781) 238–7146; fax (781) 238–7199.

SUPPLEMENTARY INFORMATION:

Comments Invited

We invite you to send us any written relevant data, views, or arguments regarding this proposal. Send your comments to an address listed under **ADDRESSES**. Include "Docket No. FAA–2010–0732; Directorate Identifier 2010–NE–04–AD" in the subject line of your comments. We specifically invite comments on the overall regulatory, economic, environmental, and energy aspects of the proposed AD. We will consider all comments received by the closing date and may amend the proposed AD in light of those comments.

We will post all comments we receive, without change, to *http://www.regulations.gov,* including any personal information you provide. We will also post a report summarizing each substantive verbal contact with FAA personnel concerning this proposed AD. Using the search function of the Web site, anyone can find and read the comments in any of our dockets,

including, if provided, the name of the individual who sent the comment (or signed the comment on behalf of an association, business, labor union, etc.). You may review the DOT's complete Privacy Act Statement in the **Federal Register** published on April 11, 2000 (65 FR 19477–78).

Examining the AD Docket

You may examine the AD docket on the Internet at *http://www.regulations.gov;* or in person at the Docket Operations office between 9 a.m. and 5 p.m., Monday through Friday, except Federal holidays. The AD docket contains this proposed AD, the regulatory evaluation, any comments received, and other information. The street address for the Docket Operations office (telephone (800) 647–5527) is the same as the Mail address provided in the **ADDRESSES** section. Comments will be available in the AD docket shortly after receipt.

Discussion

We have received reports of 21 nonconforming land balance-cuts on GGT shafts, P/N 6068T44P02. The nonconforming land balance-cuts can negatively affect the low-cycle fatigue life capability of the shaft. This condition, if not corrected, could result in the shaft failing before its published life limit, and which could result in an uncontained engine failure and damage to the airplane.

Relevant Service Information

We have reviewed and approved the technical contents of GE CT7–TP Alert Service Bulletin (ASB) 72–A0501, Revision 01, dated March 3, 2010, that lists the affected shafts by P/N and S/N, and describes procedures for inspecting the GGT shaft for nonconforming land balance-cuts.

FAA's Determination and Requirements of the Proposed AD

We have evaluated all pertinent information and identified an unsafe condition that is likely to exist or develop on other products of this same type design. We are proposing this AD, which would require inspecting certain S/N GGT shafts, P/N 6068T44P02, for nonconforming land balance-cuts, and if found, replacing the shaft. The proposed AD would require you to use the service information described previously to perform these actions.

Costs of Compliance

We estimate that this proposed AD would affect five engines installed on airplanes of U.S. registry. We also estimate that it would take about 1 work-hour per engine to perform the inspection, 1.5 work-hours to replace the shaft, and that the average labor rate is $85 per work-hour. Required parts would cost about $28,633 per engine. Based on these figures, we estimate the total cost of the proposed AD to U.S. operators to be $144,227.

Authority for This Rulemaking

Title 49 of the United States Code specifies the FAA's authority to issue rules on aviation safety. Subtitle I, section 106, describes the authority of the FAA Administrator. Subtitle VII, Aviation Programs, describes in more detail the scope of the Agency's authority.

We are issuing this rulemaking under the authority described in subtitle VII, part A, subpart III, section 44701, "General requirements." Under that section, Congress charges the FAA with promoting safe flight of civil aircraft in air commerce by prescribing regulations for practices, methods, and procedures the Administrator finds necessary for safety in air commerce. This regulation is within the scope of that authority because it addresses an unsafe condition that is likely to exist or develop on products identified in this rulemaking action.

Regulatory Findings

We have determined that this proposed AD would not have federalism implications under Executive Order 13132. This proposed AD would not have a substantial direct effect on the States, on the relationship between the national Government and the States, or on the distribution of power and responsibilities among the various levels of government.

For the reasons discussed above, I certify that the proposed AD:

1. Is not a "significant regulatory action" under Executive Order 12866;

2. Is not a "significant rule" under the DOT Regulatory Policies and Procedures (44 FR 11034, February 26, 1979); and

3. Would not have a significant economic impact, positive or negative, on a substantial number of small entities under the criteria of the Regulatory Flexibility Act.

We prepared a regulatory evaluation of the estimated costs to comply with this proposed AD. You may get a copy of this summary at the address listed under **ADDRESSES**.

List of Subjects in 14 CFR Part 39

Air transportation, Aircraft, Aviation safety, Incorporation by reference, Safety.

The Proposed Amendment

Under the authority delegated to me by the Administrator, the Federal Aviation Administration proposes to amend 14 CFR part 39 as follows:

PART 39—AIRWORTHINESS DIRECTIVES

1. The authority citation for part 39 continues to read as follows:

Authority: 49 U.S.C. 106(g), 40113, 44701.

§ 39.13 [Amended]

2. The FAA amends § 39.13 by adding the following new airworthiness directive:

General Electric Company (GE): Docket No. FAA–2010–0732; Directorate Identifier 2010–NE–04–AD.

Comments Due Date

(a) The Federal Aviation Administration (FAA) must receive comments on this airworthiness directive (AD) action by September 21, 2010.

Affected ADs

(b) None.

Applicability

(c) This AD applies to GE CT7–9C and –9C3 turboprop engines with gas generator turbine (GGT) shafts, part number (P/N) 6068T44P02, that have a serial number (S/N) listed in Table 1 of this AD, installed. These engines are installed on, but not limited to, EADS CASA (formerly Construcciones Aeronauticas, S.A.) CN–235 series airplanes.

TABLE 1—AFFECTED GGT SHAFT S/NS

Affected Shaft S/Ns			
GATHHCPC	GATHHJR7	GATHHJR9	GATHHKG6
GATHHM9R	GATHHWM3	GATHJ4ED	GATHJ9FL
GATHJ19J	GATHJE8P	GATHJWWR	GATHK0KM
GATHK2N1	GATHK3M3	GATHK90K	GATHK96D
GATHKF9R	GATHKH36	GATHKMP7	GATHKRKN
NCE715DA			

Unsafe Condition

(d) This AD results from reports of a manufacturing quality problem. We are issuing this AD to detect nonconforming GGT shaft land balance-cuts, which could result in the shaft failing before its published life limit, and which could result in an uncontained engine failure and damage to the airplane.

Compliance

(e) You are responsible for having the actions required by this AD performed at the first shop visit after the effective date of this AD, or within 5,000 cycles-since-new, whichever occurs first, unless the actions have already been done.

Inspection for Nonconforming Land Balance-Cuts

(f) For CT7–9C and –9C3 engines with a GGT shaft, P/N 6068T44P02, that has a S/N listed in Table 1 of this AD, installed, inspect the shaft for nonconforming land balance-cuts. Use the Accomplishment Instructions 3.A.(1) through 3.A.(4) of GE CT7–TP Alert Service Bulletin 72–A0501, Revision 01, dated March 3, 2010, to perform the inspection.

(g) If you find any nonconforming land balance-cuts, remove the shaft from service.

Alternative Methods of Compliance

(h) The Manager, Engine Certification Office, has the authority to approve alternative methods of compliance for this AD if requested using the procedures found in 14 CFR 39.19.

Related Information

(i) Contact Barbara Caufield, Aerospace Engineer, Engine Certification Office, FAA, Engine & Propeller Directorate, 12 New England Executive Park, Burlington, MA 01803; e-mail: *barbara.caufield@faa.gov;* telephone (781) 238–7146; fax (781) 238–7199, for more information about this AD.

(j) GE CT7–TP Alert Service Bulletin 72–A0501, Revision 01, dated March 3, 2010, pertains to the subject of this AD. Contact General Electric Company, GE–Aviation, Room 285, 1 Newmann Way, Cincinnati, Ohio 45215; e-mail *geae.aoc@ge.com;* telephone (513) 552–3272; fax (513) 552–3329, for a copy of this service information.

Issued in Burlington, Massachusetts, on July 15, 2010.

Peter A. White,

Assistant Manager, Engine and Propeller Directorate, Aircraft Certification Service.

[FR Doc. 2010–17999 Filed 7–22–10; 8:45 am]

BILLING CODE 4910–13–P

DEPARTMENT OF TRANSPORTATION

Federal Aviation Administration

14 CFR Part 39

[Docket No. FAA–2010–0736; Directorate Identifier 2010–CE–035–AD]

RIN 2120–AA64

Airworthiness Directives; PIAGGIO AERO INDUSTRIES S.p.A Model PIAGGIO P–180 Airplanes

AGENCY: Federal Aviation Administration (FAA), Department of Transportation (DOT).

ACTION: Notice of proposed rulemaking (NPRM).

SUMMARY: We propose to adopt a new airworthiness directive (AD) for the products listed above. This proposed AD results from mandatory continuing airworthiness information (MCAI) originated by an aviation authority of another country to identify and correct an unsafe condition on an aviation product. The MCAI describes the unsafe condition as:

A damaged fuel heater caused a fuel leakage in the engine nacelle; investigation revealed that the damage to the fuel heater was due to chafing with an oil cooling system hose.

PIAGGIO AERO INDUSTIRES (PAI) issued Service Bulletin (SB) 80–0175, which was applicable to all aeroplanes and contained instructions for a repetitive inspection of the affected parts and, if necessary, their replacement and/or for the repositioning of oil/fuel tubing if minimum clearances were not found.

The proposed AD would require actions that are intended to address the unsafe condition described in the MCAI.

DATES: We must receive comments on this proposed AD by September 7, 2010.

ADDRESSES: You may send comments by any of the following methods:

- *Federal eRulemaking Portal:* Go to *http://www.regulations.gov.* Follow the instructions for submitting comments.
- *Fax:* (202) 493–2251.
- *Mail:* U.S. Department of Transportation, Docket Operations, M–30, West Building Ground Floor, Room W12–140, 1200 New Jersey Avenue, SE., Washington, DC 20590.
- *Hand Delivery:* U.S. Department of Transportation, Docket Operations, M–30, West Building Ground Floor, Room W12–140, 1200 New Jersey Avenue, SE., Washington, DC 20590, between 9 a.m. and 5 p.m., Monday through Friday, except Federal holidays.

Examining the AD Docket

You may examine the AD docket on the Internet at *http://www.regulations.gov;* or in person at the Docket Management Facility between 9 a.m. and 5 p.m., Monday through Friday, except Federal holidays. The AD docket contains this proposed AD, the regulatory evaluation, any comments received, and other information. The street address for the Docket Office (telephone (800) 647–5527) is in the **ADDRESSES** section. Comments will be available in the AD docket shortly after receipt.

FOR FURTHER INFORMATION CONTACT: S.M. Nagarajan, Aerospace Engineer, FAA, Small Airplane Directorate, 901 Locust, Room 301, Kansas City, Missouri 64106; telephone: (816) 329–4145; fax: (816) 329–4090.

SUPPLEMENTARY INFORMATION:

Comments Invited

We invite you to send any written relevant data, views, or arguments about this proposed AD. Send your comments to an address listed under the **ADDRESSES** section. Include "Docket No. FAA–2010–0736; Directorate Identifier 2010–CE–035–AD" at the beginning of your comments. We specifically invite comments on the overall regulatory, economic, environmental, and energy aspects of this proposed AD. We will consider all comments received by the closing date and may amend this proposed AD because of those comments.

We will post all comments we receive, without change, to *http://www.regulations.gov,* including any personal information you provide. We will also post a report summarizing each substantive verbal contact we receive about this proposed AD.

Discussion

The European Aviation Safety Agency (EASA), which is the Technical Agent for the Member States of the European Community, has issued AD No. 2010–0125, dated June 23, 2010 (referred to after this as "the MCAI"), to correct an unsafe condition for the specified products. The MCAI states:

A damaged fuel heater caused a fuel leakage in the engine nacelle; investigation revealed that the damage to the fuel heater was due to chafing with an oil cooling system hose.

Piaggio Aero Industries (PAI) issued Service Bulletin (SB) 80–0175, which was applicable to all aeroplanes and contained instructions for a repetitive inspection of the affected parts and, if necessary, their replacement and/or for the repositioning of oil/fuel tubing if minimum clearances were not found.

ENAC of Italy issued PA 2002–335 to require the accomplishment of these corrective actions.

Later on, PAI introduced a new Hose Assembly (P/N 80–337284–001), which allows better clearances and removes the problem of potential interference. PAI issued SB 80–0175 Revision 1, limiting the applicability to aeroplanes with the old P/N installed only and giving instructions for the replacement with the new Hose Assembly P/N.

This new AD, which supersedes ENAC Italy PA 2002–335, is issued to grant the revised applicability and to include an optional terminating action, which consists in replacing the Hose Assembly P/N 80–337276–001 with the new P/N 80–337284–001.

You may obtain further information by examining the MCAI in the AD docket.

Relevant Service Information

PIAGGIO AERO INDUSTRIES S.p.A. has issued Service Bulletin (Mandatory) N.: 80–0175, Rev. N. 1, dated May 14, 2010. The actions described in this service information are intended to correct the unsafe condition identified in the MCAI.

FAA's Determination and Requirements of the Proposed AD

This product has been approved by the aviation authority of another country, and is approved for operation in the United States. Pursuant to our bilateral agreement with this State of Design Authority, they have notified us of the unsafe condition described in the MCAI and service information referenced above. We are proposing this AD because we evaluated all information and determined the unsafe condition exists and is likely to exist or develop on other products of the same type design.

Differences Between This Proposed AD and the MCAI or Service Information

We have reviewed the MCAI and related service information and, in general, agree with their substance. But we might have found it necessary to use different words from those in the MCAI to ensure the AD is clear for U.S. operators and is enforceable. In making these changes, we do not intend to differ substantively from the information provided in the MCAI and related service information.

We might also have proposed different actions in this AD from those in the MCAI in order to follow FAA policies. Any such differences are highlighted in a Note within the proposed AD.

Costs of Compliance

We estimate that this proposed AD will affect 99 products of U.S. registry. We also estimate that it would take about 5 work-hours per product to comply with the basic requirements of this proposed AD. The average labor rate is $85 per work-hour.

Based on these figures, we estimate the cost of the proposed AD on U.S. operators to be $42,075, or $425 per product.

In addition, we estimate that any necessary follow-on actions would take about 32 work-hours and require parts costing $3,700, for a cost of $6,420 per product. We have no way of determining the number of products that may need these actions.

Authority for This Rulemaking

Title 49 of the United States Code specifies the FAA's authority to issue rules on aviation safety. Subtitle I, section 106, describes the authority of the FAA Administrator. "Subtitle VII: Aviation Programs," describes in more detail the scope of the Agency's authority.

We are issuing this rulemaking under the authority described in "Subtitle VII, Part A, Subpart III, Section 44701: General requirements." Under that section, Congress charges the FAA with promoting safe flight of civil aircraft in air commerce by prescribing regulations for practices, methods, and procedures the Administrator finds necessary for safety in air commerce. This regulation is within the scope of that authority because it addresses an unsafe condition that is likely to exist or develop on products identified in this rulemaking action.

Regulatory Findings

We determined that this proposed AD would not have federalism implications under Executive Order 13132. This proposed AD would not have a substantial direct effect on the States, on the relationship between the national Government and the States, or on the distribution of power and responsibilities among the various levels of government.

For the reasons discussed above, I certify this proposed regulation:

1. Is not a "significant regulatory action" under Executive Order 12866;

2. Is not a "significant rule" under the DOT Regulatory Policies and Procedures (44 FR 11034, February 26, 1979); and

3. Will not have a significant economic impact, positive or negative, on a substantial number of small entities under the criteria of the Regulatory Flexibility Act.

We prepared a regulatory evaluation of the estimated costs to comply with this proposed AD and placed it in the AD docket.

List of Subjects in 14 CFR Part 39

Air transportation, Aircraft, Aviation safety, Incorporation by reference, Safety.

The Proposed Amendment

Accordingly, under the authority delegated to me by the Administrator, the FAA proposes to amend 14 CFR part 39 as follows:

PART 39—AIRWORTHINESS DIRECTIVES

1. The authority citation for part 39 continues to read as follows:

Authority: 49 U.S.C. 106(g), 40113, 44701.

§ 39.13 [Amended]

2. The FAA amends § 39.13 by adding the following new AD:

Piaggio Aero Industries S.p.A: Docket No. FAA–2010–0736; Directorate Identifier 2010–CE–035–AD.

Comments Due Date

(a) We must receive comments by September 7, 2010.

Affected ADs

(b) None.

Applicability

(c) This AD applies to PIAGGIO AERO INDUSTRIES S.p.A. Model PIAGGIO P–180 airplanes, all serial numbers, that are:

(i) equipped with hose assembly, part number (P/N) 80–337276–001; and

(ii) certificated in any category.

Subject

(d) Air Transport Association of America (ATA) Code 79: Engine Oil.

Reason

(e) The mandatory continuing airworthiness information (MCAI) states:

A damaged fuel heater caused a fuel leakage in the engine nacelle; investigation revealed that the damage to the fuel heater was due to chafing with an oil cooling system hose.

Piaggio Aero Industries (PAI) issued Service Bulletin (SB) 80–0175, which was applicable to all aeroplanes and contained instructions for a repetitive inspection of the affected parts and, if necessary, their replacement and/or for the repositioning of oil/fuel tubing if minimum clearances were not found.

ENAC of Italy issued PA 2002–335 to require the accomplishment of these corrective actions.

Later on, PAI introduced a new Hose Assembly (P/N 80–337284–001), which allows better clearances and removes the problem of potential interference. PAI issued SB 80–0175 Revision 1, limiting the applicability to aeroplanes with the old P/N installed only and giving instructions for the replacement with the new Hose Assembly P/N.

This new AD, which supersedes ENAC Italy PA 2002–335, is issued to grant the

revised applicability and to include an optional terminating action, which consists in replacing the Hose Assembly P/N 80–337276–001 with the new P/N 80–337284–001.

Actions and Compliance

(f) Unless already done, do the following actions:

(1) Within the next 150 hours time-in-service (TIS) after the effective date of this AD and repetitively thereafter at intervals not to exceed 165 hours TIS after the last inspection, inspect the left-hand and the right-hand engine mounted fuel heater for wear damage and minimum clearance. Do the inspections following Part A of the Accomplishment Instructions in PIAGGIO AERO INDUSTRIES S.p.A. Service Bulletin (Mandatory) N.: 80–0175, Rev. N. 1, dated May 14, 2010.

(2) If any wear damage to the fuel heater or to the oil cooling system hose is detected during any inspection required in paragraph (f)(1) of this AD, before further flight after the inspection, replace hose assembly P/N 80–337276–001 with a new hose assembly P/N 80–337284–001. Do the replacement following Part B of the Accomplishment Instructions in PIAGGIO AERO INDUSTRIES S.p.A. Service Bulletin (Mandatory) N.: 80–0175, Rev. N. 1, dated May 14, 2010. Installing hose assembly P/N 80–337284–001 terminates the repetitive inspections required in paragraph (f)(1) of this AD.

(3) If no wear damage to the fuel heater or to the oil cooling system hose is detected, but insufficient clearance is found during any inspection required in paragraph (f)(1) of this AD, within the next 660 hours TIS after the inspection, replace hose assembly P/N 80–337276–001 with a new hose assembly P/N 80–337284–001. Do the replacement following Part B of the Accomplishment Instructions in PIAGGIO AERO INDUSTRIES S.p.A. Service Bulletin (Mandatory) N.: 80–0175, Rev. N. 1, dated May 14, 2010. Installing hose assembly P/N 80–337284–001 terminates the repetitive inspections required in paragraph (f)(1) of this AD.

(4) You may terminate the repetitive inspections required in paragraph (f)(1) of this AD by replacing hose assembly P/N 80–337276–001 with a new hose assembly P/N 80–337284–001 at any time after the initial inspection required in paragraph (f)(1) of this AD, as long as no wear damage to the fuel heater or to the oil cooling system hose is detected and sufficient clearance is found.

FAA AD Differences

Note: This AD differs from the MCAI and/or service information as follows: No differences.

Other FAA AD Provisions

(g) The following provisions also apply to this AD:

(1) Alternative Methods of Compliance (AMOCs): The Manager, Standards Office, FAA, has the authority to approve AMOCs for this AD, if requested using the procedures found in 14 CFR 39.19. Send information to ATTN: S.M. Nagarajan, Aerospace Engineer, FAA, Small Airplane Directorate, 901 Locust, Room 301, Kansas City, Missouri 64106; telephone: (816) 329–4145; fax: (816) 329–4090. Before using any approved AMOC on any airplane to which the AMOC applies, notify your appropriate principal inspector (PI) in the FAA Flight Standards District Office (FSDO), or lacking a PI, your local FSDO.

(2) Airworthy Product: For any requirement in this AD to obtain corrective actions from a manufacturer or other source, use these actions if they are FAA-approved. Corrective actions are considered FAA-approved if they are approved by the State of Design Authority (or their delegated agent). You are required to assure the product is airworthy before it is returned to service.

(3) Reporting Requirements: For any reporting requirement in this AD, under the provisions of the Paperwork Reduction Act (44 U.S.C. 3501 et. seq.), the Office of Management and Budget (OMB) has approved the information collection requirements and has assigned OMB Control Number 2120–0056.

Related Information

(h) Refer to MCAI European Aviation Safety Agency (EASA) AD No. 2010–0125, dated June 23, 2010; and PIAGGIO AERO INDUSTRIES S.p.A. Service Bulletin (Mandatory) N.: 80–0175, Rev. N. 1, dated May 14, 2010, for related information.

Issued in Kansas City, Missouri, on July 16, 2010.

Kim Smith,

Manager, Small Airplane Directorate, Aircraft Certification Service.

[FR Doc. 2010–18024 Filed 7–22–10; 8:45 am]

BILLING CODE 4910–13–P

DEPARTMENT OF TRANSPORTATION

Federal Aviation Administration

14 CFR Part 39

[Docket No. FAA–2010–0735; Directorate Identifier 2010–CE–030–AD]

RIN 2120–AA64

Airworthiness Directives; CENTRAIR Models 101, 101A, 101P, and 101AP Gliders

AGENCY: Federal Aviation Administration (FAA), Department of Transportation (DOT).

ACTION: Notice of proposed rulemaking (NPRM).

SUMMARY: We propose to adopt a new airworthiness directive (AD) for the products listed above. This proposed AD results from mandatory continuing airworthiness information (MCAI) originated by an aviation authority of another country to identify and correct an unsafe condition on an aviation product. The MCAI describes the unsafe condition as:

Damages to the rudder bar locking adjustment tube of a non-reinforced version have been reported to Société Nouvelle (SN) Centrair. This tube had been reinforced in 1984 with a modification. Gliders produced before the introduction of this modification have not been systematically retrofitted.

In case of rudder bar locking adjustment tube breaking in flight when adjusting the rudder pedals position, it might interfere with the rudder pedals which could lead to rudder jam or a restricted rudder movement and consequently, to reduced control of the sailplane.

The proposed AD would require actions that are intended to address the unsafe condition described in the MCAI.

DATES: We must receive comments on this proposed AD by September 7, 2010.

ADDRESSES: You may send comments by any of the following methods:

- *Federal eRulemaking Portal:* Go to *http://www.regulations.gov.* Follow the instructions for submitting comments.
- *Fax:* (202) 493–2251.
- *Mail:* U.S. Department of Transportation, Docket Operations, M–30, West Building Ground Floor, Room W12–140, 1200 New Jersey Avenue, SE., Washington, DC 20590.
- *Hand Delivery:* U.S. Department of Transportation, Docket Operations, M–30, West Building Ground Floor, Room W12–140, 1200 New Jersey Avenue, SE., Washington, DC 20590, between 9 a.m. and 5 p.m., Monday through Friday, except Federal holidays.

Examining the AD Docket

You may examine the AD docket on the Internet at *http://www.regulations.gov;* or in person at the Docket Management Facility between 9 a.m. and 5 p.m., Monday through Friday, except Federal holidays. The AD docket contains this proposed AD, the regulatory evaluation, any comments received, and other information. The street address for the Docket Office (telephone (800) 647–5527) is in the **ADDRESSES** section. Comments will be available in the AD docket shortly after receipt.

FOR FURTHER INFORMATION CONTACT: Greg Davison, Aerospace Engineer, FAA, Small Airplane Directorate, 901 Locust, Room 301, Kansas City, Missouri 64106; telephone: (816) 329–4130; fax: (816) 329–4090.

SUPPLEMENTARY INFORMATION:

Comments Invited

We invite you to send any written relevant data, views, or arguments about this proposed AD. Send your comments to an address listed under the **ADDRESSES** section. Include "Docket No. FAA–2010–0735; Directorate Identifier 2010–CE–030–AD" at the beginning of your comments. We specifically invite comments on the overall regulatory,

economic, environmental, and energy aspects of this proposed AD. We will consider all comments received by the closing date and may amend this proposed AD because of those comments.

We will post all comments we receive, without change, to *http://www.regulations.gov,* including any personal information you provide. We will also post a report summarizing each substantive verbal contact we receive about this proposed AD.

Discussion

The European Aviation Safety Agency (EASA), which is the Technical Agent for the Member States of the European Community, has issued AD No. 2010–0099, dated May 26, 2010, (referred to after this as "the MCAI"), to correct an unsafe condition for the specified products. The MCAI states:

Damages to the rudder bar locking adjustment tube of a non-reinforced version have been reported to Société Nouvelle (SN) Centrair. This tube had been reinforced in 1984 with a modification. Gliders produced before the introduction of this modification have not been systematically retrofitted.

In case of rudder bar locking adjustment tube breaking in flight when adjusting the rudder pedals position, it might interfere with the rudder pedals which could lead to rudder jam or a restricted rudder movement and consequently, to reduced control of the sailplane.

For the reason described above, this AD requires inspecting the rudder bar locking adjustment tube and, if necessary, replacing it.

You may obtain further information by examining the MCAI in the AD docket.

Relevant Service Information

Société Nouvelle Centrair has issued Service Bulletin No. 101–29, dated July 30, 2009. The actions described in this service information are intended to correct the unsafe condition identified in the MCAI.

FAA's Determination and Requirements of the Proposed AD

This product has been approved by the aviation authority of another country, and is approved for operation in the United States. Pursuant to our bilateral agreement with this State of Design Authority, they have notified us of the unsafe condition described in the MCAI and service information referenced above. We are proposing this AD because we evaluated all information and determined the unsafe condition exists and is likely to exist or develop on other products of the same type design.

Differences Between This Proposed AD and the MCAI or Service Information

We have reviewed the MCAI and related service information and, in general, agree with their substance. But we might have found it necessary to use different words from those in the MCAI to ensure the AD is clear for U.S. operators and is enforceable. In making these changes, we do not intend to differ substantively from the information provided in the MCAI and related service information.

We might also have proposed different actions in this AD from those in the MCAI in order to follow FAA policies. Any such differences are highlighted in a Note within the proposed AD.

Costs of Compliance

We estimate that this proposed AD will affect 52 products of U.S. registry. We also estimate that it would take about 1 work-hour per product to comply with the basic requirements of this proposed AD. The average labor rate is $85 per work-hour.

Based on these figures, we estimate the cost of the proposed AD on U.S. operators to be $4,420 or $85 per product.

In addition, we estimate that any necessary follow-on actions would take about 1 work-hour and require parts costing $51, for a cost of $136 per product. We have no way of determining the number of products that may need these actions.

Authority for This Rulemaking

Title 49 of the United States Code specifies the FAA's authority to issue rules on aviation safety. Subtitle I, section 106, describes the authority of the FAA Administrator. "Subtitle VII: Aviation Programs," describes in more detail the scope of the Agency's authority.

We are issuing this rulemaking under the authority described in "Subtitle VII, Part A, Subpart III, section 44701: General requirements." Under that section, Congress charges the FAA with promoting safe flight of civil aircraft in air commerce by prescribing regulations for practices, methods, and procedures the Administrator finds necessary for safety in air commerce. This regulation is within the scope of that authority because it addresses an unsafe condition that is likely to exist or develop on products identified in this rulemaking action.

Regulatory Findings

We determined that this proposed AD would not have federalism implications under Executive Order 13132. This proposed AD would not have a substantial direct effect on the States, on the relationship between the national Government and the States, or on the distribution of power and responsibilities among the various levels of government.

For the reasons discussed above, I certify this proposed regulation:

1. Is not a "significant regulatory action" under Executive Order 12866;

2. Is not a "significant rule" under the DOT Regulatory Policies and Procedures (44 FR 11034, February 26, 1979); and

3. Will not have a significant economic impact, positive or negative, on a substantial number of small entities under the criteria of the Regulatory Flexibility Act.

We prepared a regulatory evaluation of the estimated costs to comply with this proposed AD and placed it in the AD docket.

List of Subjects in 14 CFR Part 39

Air transportation, Aircraft, Aviation safety, Incorporation by reference, Safety.

The Proposed Amendment

Accordingly, under the authority delegated to me by the Administrator, the FAA proposes to amend 14 CFR part 39 as follows:

PART 39—AIRWORTHINESS DIRECTIVES

1. The authority citation for part 39 continues to read as follows:

Authority: 49 U.S.C. 106(g), 40113, 44701.

§ 39.13 [Amended]

2. The FAA amends § 39.13 by adding the following new AD:

Centrair: Docket No. FAA–2010–0735; Directorate Identifier 2010–CE–030–AD.

Comments Due Date

(a) We must receive comments by September 7, 2010.

Affected ADs

(b) None.

Applicability

(c) This AD applies to CENTRAIR Models 101, 101A, 101P, and 101AP gliders, all serial numbers, certificated in any category.

Subject

(d) Air Transport Association of America (ATA) Code 27: Flight Controls.

Reason

(e) The mandatory continuing airworthiness information (MCAI) states:

Damages to the rudder bar locking adjustment tube of a non-reinforced version have been reported to Société Nouvelle (SN) Centrair. This tube had been reinforced in 1984 with a modification. Gliders produced

before the introduction of this modification have not been systematically retrofitted.

In case of rudder bar locking adjustment tube breaking in flight when adjusting the rudder pedals position, it might interfere with the rudder pedals which could lead to rudder jam or a restricted rudder movement and consequently, to reduced control of the sailplane.

For the reason described above, this AD requires inspecting the rudder bar locking adjustment tube and, if necessary, replacing it.

Actions and Compliance

(f) Unless already done, do the following actions in accordance with Société Nouvelle Centrair Service Bulletin No. 101–29, dated July 30, 2009:

(1) Within the next 30 days after the effective date of this AD, inspect the rudder bar locking adjustment tube to determine if it has been reinforced and to determine if it has been damaged.

(2) If the results of the inspection required in paragraph (f)(1) of this AD show that the rudder bar locking adjustment tube has not been reinforced and is not damaged, replace it with a reinforced rudder bar locking adjustment tube, part number (P/N) $Y186A, at the next scheduled maintenance event after the effective date of this AD but no later than 12 months after the effective date of this AD.

(3) If the results of the inspection required in paragraph (f)(1) of this AD show that the rudder bar locking adjustment tube has not been reinforced but is damaged, replace it with a reinforced rudder bar locking adjustment tube, P/N $Y186A, before further flight.

FAA AD Differences

Note: This AD differs from the MCAI and/or service information as follows: No differences.

Other FAA AD Provisions

(g) The following provisions also apply to this AD:

(1) *Alternative Methods of Compliance (AMOCs):* The Manager, Standards Office, FAA, has the authority to approve AMOCs for this AD, if requested using the procedures found in 14 CFR 39.19. Send information to ATTN: Greg Davison, Aerospace Engineer, FAA, Small Airplane Directorate, 901 Locust, Room 301, Kansas City, Missouri 64106; telephone: (816) 329–4130; fax: (816) 329–4090. Before using any approved AMOC on any glider to which the AMOC applies, notify your appropriate principal inspector (PI) in the FAA Flight Standards District Office (FSDO), or lacking a PI, your local FSDO.

(2) *Airworthy Product:* For any requirement in this AD to obtain corrective actions from a manufacturer or other source, use these actions if they are FAA-approved. Corrective actions are considered FAA-approved if they are approved by the State of Design Authority (or their delegated agent). You are required to assure the product is airworthy before it is returned to service.

(3) *Reporting Requirements:* For any reporting requirement in this AD, under the provisions of the Paperwork Reduction Act (44 U.S.C. 3501 et seq.), the Office of Management and Budget (OMB) has approved the information collection requirements and has assigned OMB Control Number 2120–0056.

Related Information

(h) Refer to MCAI European Aviation Safety Agency (EASA) AD No. 2010–0099, dated May 26, 2010; and Société Nouvelle Centrair Service Bulletin No. 101–29, dated July 30, 2009, for related information.

Issued in Kansas City, Missouri, on July 16, 2010.

Kim Smith,

Manager, Small Airplane Directorate, Aircraft Certification Service.

[FR Doc. 2010–18021 Filed 7–22–10; 8:45 am]

BILLING CODE 4910–13–P

DEPARTMENT OF TRANSPORTATION

Federal Aviation Administration

14 CFR Part 39

[Docket No. FAA–2010–0734; Directorate Identifier 2010–CE–036–AD]

RIN 2120–AA64

Airworthiness Directives; PIAGGIO AERO INDUSTRIES S.p.A Model PIAGGIO P–180 Airplanes

AGENCY: Federal Aviation Administration (FAA), Department of Transportation (DOT).

ACTION: Notice of proposed rulemaking (NPRM).

SUMMARY: We propose to adopt a new airworthiness directive (AD) for the products listed above. This proposed AD results from mandatory continuing airworthiness information (MCAI) originated by an aviation authority of another country to identify and correct an unsafe condition on an aviation product. The MCAI describes the unsafe condition as:

Due to a manufacturing error, some rivets, required by drawings, were not installed in the joints between two ceiling beams and the rear pressurized bulkhead.

If left uncorrected, long term fatigue stress could locally weaken the structure, compromising the fuselage structural integrity.

The proposed AD would require actions that are intended to address the unsafe condition described in the MCAI.

DATES: We must receive comments on this proposed AD by September 7, 2010.

ADDRESSES: You may send comments by any of the following methods:

- *Federal eRulemaking Portal:* Go to *http://www.regulations.gov.* Follow the instructions for submitting comments.
- *Fax:* (202) 493–2251.
- *Mail:* U.S. Department of Transportation, Docket Operations, M–30, West Building Ground Floor, Room W12–140, 1200 New Jersey Avenue, SE., Washington, DC 20590.
- *Hand Delivery:* U.S. Department of Transportation, Docket Operations, M–30, West Building Ground Floor, Room W12–140, 1200 New Jersey Avenue, SE., Washington, DC 20590, between 9 a.m. and 5 p.m., Monday through Friday, except Federal holidays.

Examining the AD Docket

You may examine the AD docket on the Internet at *http://www.regulations.gov;* or in person at the Docket Management Facility between 9 a.m. and 5 p.m., Monday through Friday, except Federal holidays. The AD docket contains this proposed AD, the regulatory evaluation, any comments received, and other information. The street address for the Docket Office (telephone (800) 647–5527) is in the **ADDRESSES** section. Comments will be available in the AD docket shortly after receipt.

FOR FURTHER INFORMATION CONTACT: Sarjapur Nagarajan, Aerospace Engineer, FAA, Small Airplane Directorate, 901 Locust, Room 301, Kansas City, Missouri 64106; telephone: (816) 329–4145; fax: (816) 329–4090; e-mail: *sarjapur.nagarajan@faa.gov.*

SUPPLEMENTARY INFORMATION:

Comments Invited

We invite you to send any written relevant data, views, or arguments about this proposed AD. Send your comments to an address listed under the **ADDRESSES** section. Include "Docket No. FAA–2010–0734; Directorate Identifier 2010–CE–036–AD" at the beginning of your comments. We specifically invite comments on the overall regulatory, economic, environmental, and energy aspects of this proposed AD. We will consider all comments received by the closing date and may amend this proposed AD because of those comments.

We will post all comments we receive, without change, to *http://www.regulations.gov,* including any personal information you provide. We will also post a report summarizing each substantive verbal contact we receive about this proposed AD.

Discussion

The European Aviation Safety Agency (EASA), which is the Technical Agent for the Member States of the European Community, has issued AD No.: 2010–0126, dated June 23, 2010 (referred to after this as "the MCAI"), to correct an

unsafe condition for the specified products. The MCAI states:

Due to a manufacturing error, some rivets, required by drawings, were not installed in the joints between two ceiling beams and the rear pressurized bulkhead.

If left uncorrected, long term fatigue stress could locally weaken the structure, compromising the fuselage structural integrity.

This AD requires the accomplishment of Piaggio Aero Industries (PAI) Service Bulletin (SB) 80–0268 original issue, which contains instructions to rework the affected area, thus restoring the fuselage design strength as well as the fatigue specifications of the structure.

You may obtain further information by examining the MCAI in the AD docket.

Relevant Service Information

Piaggio Aero Industries S.p.A. has issued Service Bulletin (Mandatory) N.: 80–0268, REV. 0, dated December 18, 2008. The actions described in this service information are intended to correct the unsafe condition identified in the MCAI.

FAA's Determination and Requirements of the Proposed AD

This product has been approved by the aviation authority of another country, and is approved for operation in the United States. Pursuant to our bilateral agreement with this State of Design Authority, they have notified us of the unsafe condition described in the MCAI and service information referenced above. We are proposing this AD because we evaluated all information and determined the unsafe condition exists and is likely to exist or develop on other products of the same type design.

Differences Between This Proposed AD and the MCAI or Service Information

We have reviewed the MCAI and related service information and, in general, agree with their substance. But we might have found it necessary to use different words from those in the MCAI to ensure the AD is clear for U.S. operators and is enforceable. In making these changes, we do not intend to differ substantively from the information provided in the MCAI and related service information.

We might also have proposed different actions in this AD from those in the MCAI in order to follow FAA policies. Any such differences are highlighted in a Note within the proposed AD.

Costs of Compliance

We estimate that this proposed AD will affect 6 products of U.S. registry. We also estimate that it would take about 30 work-hours per product to comply with the basic requirements of this proposed AD. The average labor rate is $85 per work-hour. Required parts would cost about $100 per product.

Based on these figures, we estimate the cost of the proposed AD on U.S. operators to be $15,900, or $2,650 per product.

Authority for This Rulemaking

Title 49 of the United States Code specifies the FAA's authority to issue rules on aviation safety. Subtitle I, section 106, describes the authority of the FAA Administrator. "Subtitle VII: Aviation Programs," describes in more detail the scope of the Agency's authority.

We are issuing this rulemaking under the authority described in "Subtitle VII, Part A, Subpart III, Section 44701: General requirements." Under that section, Congress charges the FAA with promoting safe flight of civil aircraft in air commerce by prescribing regulations for practices, methods, and procedures the Administrator finds necessary for safety in air commerce. This regulation is within the scope of that authority because it addresses an unsafe condition that is likely to exist or develop on products identified in this rulemaking action.

Regulatory Findings

We determined that this proposed AD would not have federalism implications under Executive Order 13132. This proposed AD would not have a substantial direct effect on the States, on the relationship between the national Government and the States, or on the distribution of power and responsibilities among the various levels of government.

For the reasons discussed above, I certify this proposed regulation:

1. Is not a "significant regulatory action" under Executive Order 12866;

2. Is not a "significant rule" under the DOT Regulatory Policies and Procedures (44 FR 11034, February 26, 1979); and

3. Will not have a significant economic impact, positive or negative, on a substantial number of small entities under the criteria of the Regulatory Flexibility Act.

We prepared a regulatory evaluation of the estimated costs to comply with this proposed AD and placed it in the AD docket.

List of Subjects in 14 CFR Part 39

Air transportation, Aircraft, Aviation safety, Incorporation by reference, Safety.

The Proposed Amendment

Accordingly, under the authority delegated to me by the Administrator, the FAA proposes to amend 14 CFR part 39 as follows:

PART 39—AIRWORTHINESS DIRECTIVES

1. The authority citation for part 39 continues to read as follows:

Authority: 49 U.S.C. 106(g), 40113, 44701.

§ 39.13 [Amended]

2. The FAA amends § 39.13 by adding the following new AD:

Piaggio Aero Industries S.p.A: Docket No. FAA–2010–0734; Directorate Identifier 2010–CE–036–AD.

Comments Due Date

(a) We must receive comments by September 7, 2010.

Affected ADs

(b) None.

Applicability

(c) This AD applies to PIAGGIO AERO INDUSTRIES S.p.A Model PIAGGIO P–180 airplanes, serial numbers 1166 through 1175, certificated in any category.

Subject

(d) Air Transport Association of America (ATA) Code 53: Fuselage.

Reason

(e) The mandatory continuing airworthiness information (MCAI) states:

Due to a manufacturing error, some rivets, required by drawings, were not installed in the joints between two ceiling beams and the rear pressurized bulkhead.

If left uncorrected, long term fatigue stress could locally weaken the structure, compromising the fuselage structural integrity.

This AD requires the accomplishment of Piaggio Aero Industries (PAI) Service Bulletin (SB) 80–0268 original issue, which contains instructions to rework the affected area, thus restoring the fuselage design strength as well as the fatigue specifications of the structure.

Actions and Compliance

(f) Unless already done, within 200 hours time-in-service (TIS) after the effective date of this AD, replace the rivets of the joint brackets on the right-hand and left-hand beam with "Hi-Lok" fasteners, following the accomplishment instructions of Piaggio Aero Industries S.p.A. Service Bulletin (Mandatory) N.: 80–0268, REV. 0, dated December 18, 2008.

FAA AD Differences

Note: This AD differs from the MCAI and/or service information as follows: No differences.

Other FAA AD Provisions

(g) The following provisions also apply to this AD:

(1) Alternative Methods of Compliance (AMOCs): The Manager, Standards Office, FAA, has the authority to approve AMOCs for this AD, if requested using the procedures found in 14 CFR 39.19. Send information to ATTN: Sarjapur Nagarajan, Aerospace Engineer, FAA, Small Airplane Directorate, 901 Locust, Room 301, Kansas City, Missouri 64106; telephone: (816) 329–4145; fax: (816) 329–4090; e-mail: *sarjapur.nagarajan@faa.gov.* Before using any approved AMOC on any airplane to which the AMOC applies, notify your appropriate principal inspector (PI) in the FAA Flight Standards District Office (FSDO), or lacking a PI, your local FSDO.

(2) Airworthy Product: For any requirement in this AD to obtain corrective actions from a manufacturer or other source, use these actions if they are FAA-approved. Corrective actions are considered FAA-approved if they are approved by the State of Design Authority (or their delegated agent). You are required to assure the product is airworthy before it is returned to service.

(3) Reporting Requirements: For any reporting requirement in this AD, under the provisions of the Paperwork Reduction Act (44 U.S.C. 3501 *et seq.*), the Office of Management and Budget (OMB) has approved the information collection requirements and has assigned OMB Control Number 2120–0056.

Related Information

(h) Refer to MCAI European Aviation Safety Agency (EASA) AD No.: 2010–0126, dated June 23, 2010; and Piaggio Aero Industries S.p.A. Service Bulletin (Mandatory) N.: 80–0268, REV. 0, dated December 18, 2008, for related information.

Issued in Kansas City, Missouri, on July 15, 2010.

Kim Smith,

Manager, Small Airplane Directorate, Aircraft Certification Service.

[FR Doc. 2010–18019 Filed 7–22–10; 8:45 am]

BILLING CODE 4910–13–P

CONSUMER PRODUCT SAFETY COMMISSION

16 CFR Parts 1508 and 1509

Full-Size and Non-Full Size Baby Cribs: Withdrawal of Advance Notice of Proposed Rulemaking

AGENCY: Consumer Product Safety Commission.

ACTION: Withdrawal of advance notice of proposed rulemaking.

SUMMARY: The Consumer Product Safety Commission ("Commission") is terminating a proceeding for the possible amendment of the Commission's standards for full-size cribs, codified at 16 CFR part 1508, and for non-full-size cribs, codified at 16 CFR part 1509 which the Commission began with publication of an advance notice of proposed rulemaking on December 16, 1996, 61 FR 65997. On August 14, 2008, the Consumer Product Safety Improvement Act of 2008 ("CPSIA") was enacted. Section 104(b) of the CPSIA requires the Commission to promulgate consumer product safety standards for durable infant or toddler products, which are to be "substantially the same as" applicable voluntary standards (or more stringent requirements if they would further reduce the risk of injury associated with the product). Elsewhere in this issue of the **Federal Register**, the Commission is proposing safety standards for full-size and non-full-size baby cribs in response to section 104(b) of the CPSIA. The crib standards the Commission is proposing include provisions that address the risks of injury identified in the 1996 ANPR.

FOR FURTHER INFORMATION CONTACT: Patricia Edwards, Project Manager, Directorate for Engineering Sciences, Consumer Product Safety Commission, 4330 East West Highway, Bethesda, MD 20814; telephone (301) 504–7577; *pedwards@cpsc.gov.*

SUPPLEMENTARY INFORMATION:

A. Background

In 1973, the Commission issued mandatory regulations for full-size cribs, which were amended in 1982 and are codified at 16 CFR part 1508. In 1976, the Commission issued nearly identical regulations for non-full-size cribs, which were also amended in 1982, and are codified at 16 CFR part 1509. In 1996, the Commission published an advance notice of proposed rulemaking ("ANPR") which initiated a rulemaking proceeding for the possible amendment of the Commission's crib regulations to address the risk of slats disengaging from cribs sides. 61 FR 65997 (Dec. 16, 1996). After publication of the ANPR, the Commission staff worked with the voluntary standards group, ASTM International (formerly known as the American Society for Testing and Materials), which added provisions in its standard for full-size baby cribs, ASTM F 1169, to address this hazard.

The Consumer Product Safety Improvement Act of 2008 ("CPSIA", Pub. L. 110–314) was enacted on August 14, 2008. Section 104(b) of the CPSIA requires the Commission to promulgate consumer product safety standards for durable infant or toddler products. These standards are to be "substantially the same as" applicable voluntary standards or more stringent than the voluntary standard if the Commission concludes that more stringent requirements would further reduce the risk of injury associated with the product. Elsewhere in this issue of the **Federal Register**, the Commission is issuing a proposed rule that would establish safety standards for full-size and non-full-size cribs that are substantially the same as voluntary standards ASTM F 1169–10, *Standard Consumer Safety Specification for Full-Size Baby Cribs,* and ASTM F 406–10, *Standard Consumer Safety Specification for Non-Full-Size Baby Cribs.* The Commission proposes to incorporate these ASTM standards by reference with certain modifications to strengthen them. The proposed standards, as modified, would include provisions in both the full-size and non-full-size crib standards that address the risk of crib slat disengagement the Commission identified in the ANPR.

B. Withdrawal of the ANPR

The rulemaking that the Commission is now initiating under section 104(b) of the CPSIA proposes to establish new requirements for full-size and non-full size cribs that will include the requirements of the Commission's existing regulations codified at 16 CFR parts 1508 and 1509 and additional requirements in the ASTM voluntary standards. Because these new crib standards will include performance tests to address the risk of crib slat disengagement, the Commission is withdrawing the ANPR published December 16, 1996, 61 FR 65997, and terminating that rulemaking.

Dated: July 14, 2010.

Todd Stevenson,

Secretary, U.S. Consumer Product Safety Commission.

[FR Doc. 2010–17590 Filed 7–22–10; 8:45 am]

BILLING CODE 6355–01–P

CONSUMER PRODUCT SAFETY COMMISSION

16 CFR Parts 1508 and 1509

[CPSC Docket No. CPSC–2010–0075]

Revocation of Requirements for Full-Size Baby Cribs and Non-Full-Size Baby Cribs

AGENCY: Consumer Product Safety Commission.

ACTION: Proposed rule.

SUMMARY: Section 104(b) of the Consumer Product Safety Improvement Act of 2008 ("CPSIA") requires the United States Consumer Product Safety Commission ("CPSC" or "Commission") to promulgate consumer product safety standards for durable infant or toddler products. These standards are to be "substantially the same as" applicable

voluntary standards or more stringent than the voluntary standard if the Commission concludes that more stringent requirements would further reduce the risk of injury associated with the product. The Commission is proposing to revoke its existing regulations pertaining to full-size and non-full-size cribs because, elsewhere in this issue of the **Federal Register**, the Commission is proposing consumer product safety standards for cribs that will further reduce the risk of injury associated with these products under section 104 of the CPSIA. The consumer product safety standard for cribs would include the requirements that are currently found at 16 CFR parts 1508 and 1509 for full-size and non-full-size cribs. To eliminate duplication, the Commission is proposing to remove 16 CFR parts 1508 and 1509 entirely.

DATES: Written comments must be received by October 6, 2010.

ADDRESSES: Comments, identified by Docket No. CPSC–2010–0075, may be submitted by any of the following methods:

Electronic Submissions

Submit electronic comments in the following way:

Federal eRulemaking Portal: http://www.regulations.gov. Follow the instructions for submitting comments. To ensure timely processing of comments, the Commission is no longer accepting comments submitted by electronic mail (e-mail) except through *http://www.regulations.gov.*

Written Submissions

Submit written submissions in the following way:

Mail/Hand delivery/Courier (for paper, disk, or CD–ROM submissions), preferably in five copies, to: Office of the Secretary, Consumer Product Safety Commission, Room 502, 4330 East-West Highway, Bethesda, MD 20814; telephone (301) 504–7923.

Instructions: All submissions received must include the agency name and docket number for this rulemaking. All comments received may be posted without change, including any personal identifiers, contact information, or other personal information provided, to *http://www.regulations.gov.* Do not submit confidential business information, trade secret information, or other sensitive or protected information electronically. Such information should be submitted in writing.

Docket: For access to the docket to read background documents or comments received, go to *http://www.regulations.gov.*

FOR FURTHER INFORMATION CONTACT: Patricia Edwards, Project Manager, Directorate for Engineering Sciences, Consumer Product Safety Commission, 4330 East-West Highway, Bethesda, MD 20814; telephone (301) 504–7577; *pedwards@cpsc.gov.*

SUPPLEMENTARY INFORMATION:

A. What regulations is the CPSC proposing to revoke?

CPSC first published the full-size crib regulation, 16 CFR part 1508, in 1973 (38 FR 32129 (Nov. 21, 1973)) and amended it in 1982. CPSC published the regulation for non-full-size cribs, 16 CFR part 1509, in 1976 (41 FR 6240 (Feb. 12, 1976)) and amended it in 1982. Both standards currently contain requirements pertaining to dimensions, spacing of components, hardware, construction and finishing, assembly instructions, cutouts, identifying marks, warning statements, and compliance declarations. In addition, 16 CFR part 1509 contains a requirement regarding mattresses.

B. Why is CPSC proposing to revoke the regulations pertaining to cribs?

The Consumer Product Safety Improvement Act of 2008, Public Law 110–314 ("CPSIA") was enacted on August 14, 2008. Section 104(b) of the CPSIA requires the Commission to promulgate consumer product safety standards for durable infant or toddler products. These standards are to be "substantially the same as" applicable voluntary standards or more stringent than the voluntary standard if the Commission concludes that more stringent requirements would further reduce the risk of injury associated with the product. Elsewhere in this issue of the **Federal Register**, the Commission is proposing safety standards for full-size and non-full-size cribs under the authority of section 104 of the CPSIA. These new proposed standards, if finalized, will adopt the voluntary standards developed by ASTM International (formerly known as the American Society for Testing and Materials), which are more stringent in some respects than the current applicable standards, and include ASTM F 1169–10, "*Standard Consumer Safety Specification for Full-Size Baby Cribs,*" and ASTM F 406–10, "*Standard Consumer Safety Specification for Non-Full-Size Baby Cribs/Play Yards.*"

The proposed standards which the CPSC is publishing elsewhere in this issue of the **Federal Register** incorporate all of the requirements currently found in 16 CFR parts 1508 and 1509. Consequently, if the Commission issues a final rule to adopt the consumer product safety standards for full-size and non-full-size cribs pursuant to section 104(b) of the CPSIA, the requirements found at 16 CFR parts 1508 and 1509 would become redundant. The Commission, therefore, intends to revoke 16 CFR parts 1508 and 1509 in their entirety.

The Commission emphasizes that the proposed revocation of 16 CFR parts 1508 and 1509 would have no substantive effect on crib safety. The requirements currently found at 16 CFR parts 1508 and 1509 would still apply to full-size and non-full-size cribs, but would be part of new consumer product safety standards to be codified at 16 CFR parts 1219 and 1220.

C. Paperwork Reduction Act

This proposed rule would not impose any information collection requirements. Accordingly, this rule is not subject to the Paperwork Reduction Act, 44 U.S.C. 3501–3520.

D. Environmental Considerations

This proposed rule falls within the scope of the Commission's environmental review regulation at 16 CFR 1021.5(c)(1), which provides a categorical exclusion from any requirement for the agency to prepare an environmental assessment or environmental impact statement for rules that revoke product safety standards.

E. Effective Date

The Commission proposes that a final rule to revoke 16 CFR parts 1508 and 1509 become effective upon the effective date of the new mandatory standards to be developed for full-size and non-full-size cribs.

List of Subjects in 16 CFR Parts 1508 and 1509

Consumer protection, Cribs and bassinets, Infants and children, Reporting and recordkeeping requirements.

For the reasons stated above, and under the authority of section 3 of the CPSIA and 5 U.S.C. 553, the Consumer Product Safety Commission proposes to remove 16 CFR parts 1508 and 1509 entirely.

PART 1508—[REMOVED]

1. Under authority of section 3 of the CPSIA, part 1508 is removed entirely.

PART 1509—[REMOVED]

2. Under authority of section 3 of the CPSIA, part 1509 is removed entirely.

Dated: July 14, 2010.

Todd A. Stevenson,

Secretary, U.S. Consumer Product Safety Commission.

[FR Doc. 2010–17591 Filed 7–22–10; 8:45 am]

BILLING CODE 6355–01–P

DEPARTMENT OF THE TREASURY

Internal Revenue Service

26 CFR Part 54

[REG–125592–10]

RIN 1545–BJ62

Requirements for Group Health Plans and Health Insurance Issuers Relating to Internal Claims and Appeals and External Review Processes Under the Patient Protection and Affordable Care Act

AGENCY: Internal Revenue Service (IRS), Treasury.

ACTION: Notice of proposed rulemaking by cross-reference to temporary regulations.

SUMMARY: Elsewhere in this issue of the **Federal Register**, the IRS is issuing temporary regulations under the provisions of the Patient Protection and Affordable Care Act (the Affordable Care Act) regarding internal claims and appeals and external review processes. The IRS is issuing the temporary regulations at the same time that the Employee Benefits Security Administration of the U.S. Department of Labor and the Office of Consumer Information and Insurance Oversight of the U.S. Department of Health and Human Services are issuing substantially similar interim final regulations with respect to group health plans and health insurance coverage offered in connection with a group health plan under the Employee Retirement Income Security Act of 1974 and the Public Health Service Act. The temporary regulations provide guidance to employers, group health plans, and health insurance issuers providing group health insurance coverage. The text of those temporary regulations also serves as the text of these proposed regulations.

DATES: Written or electronic comments and requests for a public hearing must be received by October 21, 2010.

ADDRESSES: Send submissions to: CC:PA:LPD:PR (REG–125592–10), Room 5205, Internal Revenue Service, P.O. Box 7604, Ben Franklin Station, Washington, DC 20044. Submissions may be hand-delivered to: CC:PA:LPD:PR (REG–125592–10), Courier's Desk, Internal Revenue Service, 1111 Constitution Avenue, NW., Washington, DC 20224. Alternatively, taxpayers may submit comments electronically via the Federal eRulemaking Portal at *http://www.regulations.gov* (IRS REG–125592–10).

FOR FURTHER INFORMATION CONTACT: Concerning the regulations, Karen Levin at 202–622–6080; concerning submissions of comments, Oluwafunmilayo Taylor at 202–622–7180 (not toll-free numbers).

SUPPLEMENTARY INFORMATION:

Background and Explanation of Provisions

The temporary regulations published elsewhere in this issue of the **Federal Register** add § 54.9815–2719T to the Miscellaneous Excise Tax Regulations. The proposed and temporary regulations are being published as part of a joint rulemaking with the Department of Labor and the Department of Health and Human Services (the joint rulemaking). The text of those temporary regulations also serves as the text of these proposed regulations. The preamble to the temporary regulations explains the temporary regulations and these proposed regulations.

Special Analyses

It has been determined that this notice of proposed rulemaking is not a significant regulatory action as defined in Executive Order 12866. Therefore, a regulatory assessment is not required. It has also been determined that section 553(b) of the Administrative Procedure Act (5 U.S.C. chapter 5) does not apply to this proposed regulation. It is hereby certified that the collections of information contained in this notice of proposed rulemaking will not have a significant impact on a substantial number of small entities. Accordingly, a regulatory flexibility analysis under the Regulatory Flexibility Act (5 U.S.C. chapter 6) is not required. Section 54.9815–2719T of the temporary regulations requires both group health insurance issuers and group health plans to establish internal claims and appeals and external review processes for adverse benefit determinations. Those processes require the plan and issuer to disclose evidence relied upon in making an adverse benefit determination, to disclose any new rationale for upholding an adverse benefit determination as part of an internal appeal, to provide notice of an adverse benefit determination and of a final internal adverse benefit determination, and to disclose the right to an external review. Under the temporary regulations, if a health insurance issuer satisfies the obligations to have effective internal claims and appeals and external review processes (including these information collection requirements that are an inherent part of those processes), those obligations are satisfied not just for the issuer but also for the group health plan. For group health plans maintained by small entities, it is anticipated that the health insurance issuer will satisfy those obligations to have effective internal claims and appeals and external review processes (including these information collection requirements that are an inherent part of those processes) for both the plan and the issuer in almost all cases. For this reason, these information collection requirements will not impose a significant impact on a substantial number of small entities. Pursuant to section 7805(f) of the Internal Revenue Code, this regulation has been submitted to the Chief Counsel for Advocacy of the Small Business Administration for comment on its impact on small business.

Comments and Requests for a Public Hearing

Before these proposed regulations are adopted as final regulations, consideration will be given to any written comments (a signed original and eight (8) copies) or electronic comments that are submitted timely to the IRS. Comments are specifically requested on the clarity of the proposed regulations and how they may be made easier to understand. All comments will be available for public inspection and copying. A public hearing may be scheduled if requested in writing by a person that timely submits written comments. If a public hearing is scheduled, notice of the date, time, and place for the hearing will be published in the **Federal Register**.

Drafting Information

The principal author of these proposed regulations is Karen Levin, Office of the Division Counsel/Associate Chief Counsel (Tax Exempt and Government Entities), IRS. The proposed regulations, as well as the temporary regulations, have been developed in coordination with personnel from the U.S. Department of Labor and the U.S. Department of Health and Human Services.

List of Subjects in 26 CFR Part 54

Excise taxes, Health care, Health insurance, Pensions, Reporting and recordkeeping requirements.

Proposed Amendments to the Regulations

Accordingly, 26 CFR part 54 is proposed to be amended as follows:

PART 54—PENSION EXCISE TAXES

Paragraph 1. The authority citation for part 54 is amended by adding an entry in numerical order to read in part as follows:

Authority: 26 U.S.C. 7805 * * *

Section 54.9815–2719 also issued under 26 U.S.C. 9833. * * *

Par. 2. Section 54.9815–2719 is added to read as follows:

§ 54.9815–2719 Internal claims and appeals and external review processes.

[The text of proposed § 54.9815–2719 is the same as the text of paragraphs (a) through (f) of § 54.9815–2719T published elsewhere in this issue of the **Federal Register**].

Steven Miller,

Deputy Commissioner for Services and Enforcement.

[FR Doc. 2010–18050 Filed 7–22–10; 8:45 am]

BILLING CODE 4830–01–P

DEPARTMENT OF THE TREASURY

Internal Revenue Service

26 CFR Part 300

[REG–139343–08]

RIN 1545–B171

User Fees Relating to Enrollment and Preparer Tax Identification Numbers

AGENCY: Internal Revenue Service (IRS), Treasury.

ACTION: Notice of proposed rulemaking and notice of public hearing.

SUMMARY: This document contains proposed amendments to the regulations relating to the imposition of certain user fees on certain tax practitioners. The proposed regulations establish a new user fee for individuals who apply for or renew a preparer tax identification number (PTIN). The proposed regulations affect individuals who apply for or renew a PTIN. The charging of user fees is authorized by the Independent Offices Appropriations Act of 1952.

DATES: Written or electronic comments must be received by August 23, 2010. Outlines of topics to be discussed at the public hearing scheduled for Tuesday, August 24, 2010, at 10 a.m. must be received by Monday, August 23, 2010.

ADDRESSES: Send submissions to: CC:PA:LPD:PR (REG–139343–08), Room 5205, Internal Revenue Service, P.O. Box 7604, Ben Franklin Station, Washington, DC 20044. Submissions may be hand-delivered Monday through Friday between the hours of 8 a.m. and 4 p.m. to CC:PA:LPD:PR (REG–139343–08), Courier's Desk, Internal Revenue Service, 1111 Constitution Avenue, NW., Washington, DC, or sent electronically via the Federal eRulemaking Portal at *http://www.regulations.gov* (IRS REG–139343–08). The public hearing will be held in the Auditorium of the Internal Revenue Building, 1111 Constitution Avenue, NW., Washington, DC.

FOR FURTHER INFORMATION CONTACT: Concerning the proposed regulations, Emily M. Lesniak at (202) 622–4940; concerning cost methodology, Eva J. Williams at (202) 435–5514; concerning submission of comments, the public hearing, or to be placed on the building access list to attend the public hearing, Richard A. Hurst at *Richard.A.Hurst@irscounsel.treas.gov* or (202) 622–7180 (not toll-free numbers).

SUPPLEMENTARY INFORMATION:

Background

Section 330 of title 31 of the United States Code authorizes the Secretary of the Treasury to regulate the practice of representatives before the Treasury Department. Pursuant to section 330 of title 31, the Secretary has published regulations governing practice before the IRS in 31 CFR part 10 and reprinted the regulations as Treasury Department Circular No. 230 (Circular 230). Circular 230 is administered by the IRS Office of Professional Responsibility (OPR).

User Fee for PTINs

Section 6109 of the Internal Revenue Code (Code) authorizes the Secretary to prescribe regulations for the inclusion of a tax return preparer's identifying number on a return, statement, or other document required to be filed with the IRS. Section 6109(c) further authorizes the Secretary "to require such information as may be necessary to assign an identifying number to any person." As currently prescribed in regulations, the identifying number of a tax return preparer who is an individual is the tax return preparer's social security number (SSN) or alternative number as prescribed by the IRS.

Proposed regulations under section 6109 (REG–134235–08) were published in the **Federal Register** (75 FR 14539) on March 26, 2010, and provide that, for returns or claims for refund filed after December 31, 2010, the identifying number of a tax return preparer is the individual's PTIN or such other number prescribed by the IRS in forms, instructions, or other appropriate guidance. The proposed regulations under section 6109 require a tax return preparer who prepares all or substantially all of a return or claim for refund of tax after December 31, 2010 to have a PTIN. The proposed regulations also state that the IRS will provide through other guidance (including forms and instructions) guidance regarding how to apply for a PTIN or other prescribed preparer identifying number, for the regular renewal of a PTIN or other prescribed preparer identifying number, and for the payment of a user fee. Only attorneys, certified public accountants, enrolled agents, and registered tax return preparers will be eligible to apply for a PTIN. The requirements to become a registered tax return preparer will be provided in future Circular 230 guidance.

A third party vendor will administer the PTIN application and renewal process and will charge a reasonable fee that is independent of the user fee charged by the government. The vendor will develop a web-based database that individuals will use to apply for or renew a PTIN and will process paper PTIN applications. The database also will be used for applications to become registered tax return preparers, to renew the registered tax return preparers' status, to self-certify continuing professional education credits for registered tax return preparers, and to pay applicable user fees.

Proposed § 300.9 establishes a $50 user fee to apply for or renew a PTIN. The $50 user fee is based on an annual PTIN renewal period, and the procedures for renewing a PTIN will be provided in other guidance, including forms and instructions. The user fee is nonrefundable regardless of whether the applicant receives a PTIN.

PTINs were previously issued to tax return preparers solely for the convenience of the tax return preparers, providing an alternative to using the tax return preparers' social security numbers. Requiring registration through the use of PTINs will enable the IRS to better collect and track data on tax return preparers. This data will allow the IRS to track the number of persons who prepare returns, track the qualifications of those who prepare returns, track the number of returns each person prepares, and more easily locate and review returns prepared by a

tax return preparer when instances of misconduct are detected.

The user fee to apply for or renew a PTIN recovers the costs that the government incurs to administer the PTIN application process. These costs include the development and maintenance of the IRS information technology system that interfaces with the vendor and the development and maintenance of internal applications that will have the capacity to process and administer the anticipated increase in applications for a PTIN. It is anticipated that the number of individuals requesting PTINs will increase to as many as 1.2 million individuals, and all individuals who receive PTINs will be required to renew their PTINs. The anticipated increase in demand for PTINs will require the IRS to expend more resources. The user fee will recover the cost of IRS customer service support activities, which include Web site development and maintenance and call center staffing to respond to questions regarding PTIN usage and renewal. The user fee also will recover costs for personnel, administrative, and management support needed to evaluate and address tax compliance issues of individuals applying for and renewing a PTIN, to investigate and address conduct and suitability issues, and otherwise support and enforce the programs that require an individual to apply for and renew a PTIN.

The IRS currently issues PTINs to tax return preparers without charging a user fee. The PTIN application, issuance, and renewal process, however, will become significantly more expansive and intricate with the implementation of the registered tax return preparer program. Federal tax compliance checks will be performed on all individuals who apply for or renew a PTIN. Suitability checks will be performed. The IRS will further investigate individuals when the compliance or suitability check suggests that the individual may be unfit to practice before the IRS. These checks were not previously performed as a prerequisite to obtaining a PTIN.

Additionally, the IRS will establish and implement a reconsideration process for individuals who apply to become a registered tax return preparer and are denied a PTIN upon initial application or renewal. The IRS will incur costs to apply existing Circular 230 procedures when those individuals who are certified public accountants, attorneys, enrolled agents, or registered tax return preparers are denied renewal of a PTIN.

Coordination With Other User Fees

Additional user fees related to the programs for regulating enrolled agents, enrolled retirement plan agents, and registered tax return preparers will be established in future regulations as those programs are implemented. These future regulations will address user fees associated with taking the registered tax return preparer examination and providing continuing education programs. The user fee for taking a registered tax return preparer examination will recover the costs to the government for creating, administering, and reviewing the examination. The user fee for providing continuing education programs will recover the costs to the government for the review, approval, and oversight of continuing education providers to ensure their compliance with program requirements for continuing education programs. The vendor also will charge a reasonable fee to take the registered tax return preparer examination.

Future regulations also will coordinate the enrollment and renewal user fees imposed on enrolled agents and enrolled retirement plan agents with the PTIN user fees because the costs to the government to process an enrollment application are substantially the same as the costs to the government to process a PTIN application. For example, the IRS generally may conduct only a single background check and compliance check for an individual who applies to become an enrolled agent and applies to obtain a PTIN, and therefore the enrollment application fee and the PTIN application fee must be coordinated to prevent the collection of excessive fees. It is currently anticipated that future regulations will require enrolled agents to obtain a PTIN and pay the associated application or renewal fee, in which case the enrollment and renewal fees for enrolled agents will be substantially reduced.

Effective/Applicability Dates

These regulations reorganize the effective dates for the user fees found in Treasury Regulations part 300. Currently, all of the user fee effective dates are contained in § 300.0 paragraph (c). This reorganization relocates the effective date sections to the appropriate regulation implementing each user fee. This relocation will simplify the process for updating the effective dates as the user fee regulations are revised.

Authority

The charging of user fees is authorized by the Independent Offices Appropriations Act (IOAA) of 1952, which is codified at 31 U.S.C. 9701. The IOAA authorizes agencies to prescribe regulations that establish charges for services provided by the agency. The charges must be fair and must be based on the costs to the government, the value of the service to the recipient, the public policy or interest served, and other relevant facts. The IOAA provides that regulations implementing user fees are subject to policies prescribed by the President; these policies are currently set forth in the Office of Management and Budget Circular A–25, 58 FR 38142 (July 15, 1993) (the OMB Circular).

The OMB Circular encourages user fees for government-provided services that confer benefits on identifiable recipients over and above those benefits received by the general public. Under the OMB Circular, an agency that seeks to impose a user fee for government-provided services must calculate the full cost of providing those services. In general, a user fee should be set at an amount that allows the agency to recover the full cost of providing the special service, unless the Office of Management and Budget grants an exception.

Pursuant to the guidelines in the OMB Circular, the IRS has calculated its cost of providing services under the PTIN application and renewal process. The government will charge the full cost of administering these programs and will implement the proposed user fees under the authority of the IOAA and the OMB Circular.

Proposed Effective/Applicability Date

The Administrative Procedure Act provides that substantive rules will not be effective until thirty days after the final regulations are published in the **Federal Register** (5 U.S.C. 553(d)). Final regulations may be effective prior to thirty days after publication if the publishing agency finds that there is good cause for an earlier effective date.

The IRS is implementing the recommendations in Publication 4832, "Return Preparer Review", which was published on January 4, 2010, to be effective for the 2011 Federal tax filing season (January–April 2011). The IRS and the Treasury Department find that there is good cause for these regulations to be effective upon the publication of a Treasury decision adopting these rules as final regulations in the **Federal Register**.

Special Analyses

It has been determined that this notice of proposed rulemaking is a significant regulatory action as defined in Executive Order 12866.

It has been determined that an initial regulatory flexibility analysis is required for this notice of proposed rulemaking under 5 U.S.C. 603. This analysis is set forth under the heading "Initial Regulatory Flexibility Analysis."

Pursuant to section 7805(f) of the Code, this notice of proposed rulemaking has been submitted to the Chief Counsel for Advocacy of the Small Business Administration for comment on its impact on small business.

Initial Regulatory Flexibility Analysis

When an agency issues a rulemaking proposal, the Regulatory Flexibility Act (5 U.S.C. chapter 6) (RFA) requires the agency "to prepare and make available for public comment an initial regulatory flexibility analysis" that will "describe the impact of the proposed rule on small entities." *See* 5 U.S.C. 603(a). Section 605 of the RFA provides an exception to this requirement if the agency certifies that the proposed rulemaking will not have a significant economic impact on a substantial number of small entities. A small entity is defined as a small business, small nonprofit organization, or small governmental jurisdiction. *See* 5 U.S.C. 601(3) through (6). The IRS and the Treasury Department conclude that the proposed rule, if promulgated, will have a significant economic impact on a substantial number of small entities. As a result, an initial regulatory flexibility analysis is required.

Description of the Reasons Why Action by the Agency Is Being Considered

The IRS and the Treasury Department are implementing regulatory changes that increase the oversight of the tax return preparer industry based upon findings and recommendations made by the IRS in Publication 4832, "Return Preparer Review," which was published on January 4, 2010. These regulatory changes include implementing a registered tax return preparer program and requiring all individuals who prepare all or substantially all of a tax return or claim for refund to use a PTIN as an identifying number. Except as provided in any transitional period, only attorneys, certified public accountants, enrolled agents, or registered tax return preparers may apply for a PTIN. Thus, only attorneys, certified public accountants, enrolled agents, and registered tax return preparers will be eligible to prepare all or substantially all of a tax return or claim for refund. By limiting the individuals who may prepare all or substantially all of a tax return or claim for refund to individuals who have a PTIN, the IRS is providing a special benefit to the individuals who obtain a PTIN. There are costs to the IRS that are associated with processing a PTIN application and providing the special benefits associated with the PTIN.

Future regulations will establish additional user fees related to the enrolled agent and enrolled retirement plan agent program, and registered tax return preparer program. The additional user fees will recover the costs to the government that result from providing the special benefits associated with taking the registered tax return preparer examination and providing continuing education programs. The cost to the government for administering and reviewing the registered tax return preparer examination will be recovered in a user fee for taking the registered tax return preparer examination. The cost to the government to verify compliance with requirements for continuing education programs will be recovered in a user fee for qualifying continuing education programs. Each continuing education provider may charge a fee to attend a qualified continuing education program. The third party vendor also will charge a reasonable fee to take a registered tax return preparer examination.

A Succinct Statement of the Objectives of, and Legal Basis for, the Proposed Rule

The objective of the proposed regulations is to recover the costs to the government associated with providing the special benefits that an individual receives upon applying for or renewing a PTIN. These costs include the development and maintenance of the IRS information technology system that interfaces with the vendor; the development and maintenance of internal applications; IRS customer service support activities, which include development and maintenance of an IRS Web site and call center staffing; and personnel, administrative, and management support needed to evaluate and address tax compliance issues, investigate and address conduct and suitability issues, and otherwise support and enforce the programs that require individuals to apply for or renew a PTIN. The OMB Circular encourages user fees when special benefits are conferred on identifiable recipients. Individuals who obtain a PTIN receive the ability to prepare all or substantially all of a tax return or claim for refund. The ability to prepare all or substantially all of a tax return or claim for refund is a special benefit.

The legal basis for these requirements is contained in section 9701 of title 31.

A Description of and, Where Feasible, an Estimate of the Number of Small Entities To Which the Proposed Rule Will Apply

The proposed regulations affect all individuals who want to become a registered tax return preparer under the new oversight rules in Circular 230. Only individuals, not businesses, can practice before the IRS or become a registered tax return preparer. Thus, the economic impact of these regulations on any small entity generally will be a result of applicants and registered tax return preparers owning a small business or a small entity employing applicants or registered tax return preparers.

The proposed regulations further affect all individual tax return preparers who are required to apply for or renew a PTIN. Only individuals, not businesses, can apply for or renew a PTIN. Thus, the economic impact of these regulations on any small entity generally will be a result of an individual tax return preparer who is required to apply for or renew a PTIN owning a small business or a small business otherwise employing an individual tax return preparer who is required to apply for or renew a PTIN to prepare all or substantially all of a tax return or claim for refund.

The appropriate NAICS codes for the registered tax return preparer program and PTINs are those that relate to tax preparation services (NAICS code 541213), other accounting services (NAICS code 541219), offices of lawyers (NAICS code 541110), and offices of certified public accountants (NAICS code 541211). Entities identified as tax preparation services and offices of lawyers are considered small under the Small Business Administration size standards (13 CFR 121.201) if their annual revenue is less than $7 million. Entities identified as other accounting services and offices of certified public accountants are considered small under the Small Business Administration size standards if their annual revenue is less than $8.5 million. The IRS estimates that approximately 70 to 80 percent of the individuals subject to these proposed regulations are tax return preparers operating as or employed by small entities.

A Description of the Projected Reporting, Recordkeeping and Other Compliance Requirements of the Proposed Rule, Including an Estimate of the Classes of Small Entities Which Will Be Subject to the Requirement and the Type of Professional Skills Necessary for Preparation of the Report or Record

No reporting or recordkeeping requirements are projected to be associated with this proposed regulation.

An Identification, to the Extent Practicable, of All Relevant Federal Rules Which May Duplicate, Overlap, or Conflict With the Proposed Rule

The IRS is not aware of any Federal rules that duplicate, overlap, or conflict with the proposed rule.

A Description of Any Significant Alternatives to the Proposed Rule Which Accomplish the Stated Objectives of Applicable Statutes and Which Minimize Any Significant Economic Impact of the Proposed Rule on Small Entities

The IOAA authorizes the charging of user fees for agency services, subject to policies designated by the President. The OMB Circular implements presidential policies regarding user fees and encourages user fees when a government agency provides a special benefit to a member of the public. As Congress has not appropriated funds to the registered tax return preparer program or PTIN application process, there are no viable alternatives to the imposition of user fees.

While the IRS previously issued PTINs to tax return preparers without charging a user fee, the registered tax return preparer program and the issuance of the new regulations under section 6109 will increase the number of PTIN applications to as many as 1.2 million applications and significantly increase the intricacy of the application process. Additionally, PTINs were previously issued solely for the convenience of tax return preparers to provide an alternative to using the tax return preparers' social security numbers as an identifying number on prepared returns. PTINs will now be used to collect and track data on tax return preparers. This data will provide important benefits to the IRS, such as allowing the IRS to track the number of persons who prepare returns, track the qualifications of those persons who prepare returns, track the number of returns each person prepares, and, when instances of misconduct are detected, locate and review returns prepared by a specific tax return preparer.

This anticipated increase in PTIN applications and the revised purpose of a PTIN will require the IRS to develop and maintain a Web site and train call center staff to respond to PTIN-related questions. Further, the IRS will now perform Federal tax compliance checks and perform suitability checks prior to the issuance of a PTIN. Previously, neither of these checks was performed before a PTIN was issued. When the initial compliance and suitability checks suggest that the individual applying for a PTIN may not be fit to practice before the IRS, the IRS will conduct an investigation. For individuals who are found unfit to receive a PTIN, the IRS will develop and implement a reconsideration process. Similarly, the IRS will provide due process procedures for those individuals who are certified public accountants, attorneys, enrolled agents, or registered tax return preparers and are denied renewal of their PTIN.

Thus, due to the increased costs to the government to process the application for a PTIN, the anticipated increase in PTIN applications, and the lack of appropriated funds, there is no viable alternative to imposing a user fee.

Comments and Public Hearing

Before these proposed regulations are adopted as final regulations, consideration will be given to any written (a signed original and eight (8) copies) or electronic comments that are submitted timely to the IRS. The IRS and Treasury Department request comments on the clarity of the proposed regulations and how they can be made easier to understand. All comments that are submitted by the public will be made available for public inspection and copying.

A public hearing has been scheduled for Tuesday, August 24, 2010, beginning at 10 a.m. in the Auditorium of the Internal Revenue Building, 1111 Constitution Avenue, NW., Washington, DC. Due to building security procedures, visitors must enter at the Constitution Avenue entrance. All visitors must present photo identification to enter the building. Because of access restrictions, visitors will not be admitted beyond the immediate entrance area more than 30 minutes before the hearing starts. For information about having your name placed on the building access list to attend the hearing, see the **FOR FURTHER INFORMATION CONTACT** section of this preamble.

The rules of 26 CFR 601.601(a)(3) apply to the hearing. Persons who wish to present oral comments at the hearing must submit written or electronic comments and an outline of the topics to be discussed and the time to be devoted to each topic by Monday, August 23, 2010. A period of 10 minutes will be allocated to each person for making comments.

An agenda showing the scheduling of the speakers will be prepared after the deadline for receiving outlines has passed. Copies of the agenda will be available free of charge at the hearing.

Drafting Information

The principal author of these regulations is Emily M. Lesniak, Office of the Associate Chief Counsel (Procedure and Administration).

List of Subjects in 26 CFR Part 300

Reporting and recordkeeping requirements, User fees.

Proposed Amendments to the Regulations

Accordingly, 26 CFR part 300 is proposed to be amended as follows:

PART 300—USER FEES

Paragraph 1. The authority citation for part 300 continues to read in part as follows:

Authority: 31 U.S.C. 9701.

Par. 2. Section 300.0 is amended by
1. Adding paragraph (b)(9).
2. Removing paragraph (c).
The addition reads as follows:

§ 300.0 User fees; in general.

* * * * *

(b) * * *

(9) Applying for a preparer tax identification number.

Par. 3. Section 300.1 is amended by adding paragraph (d) to read as follows:

§ 300.1 Installment agreement fee.

* * * * *

(d) *Effective/applicability date.* This section is applicable beginning March 16, 1995, except that the user fee for entering into installment agreements on or after January 1, 2007, is applicable beginning January 1, 2007.

Par. 4. Section 300.2 is amended by adding paragraph (d) to read as follows:

§ 300.2 Restructuring or reinstatement of installment agreement fee.

* * * * *

(d) *Effective/applicability date.* This section is applicable beginning March 16, 1995, except that the user fee for restructuring or reinstatement of an installment agreement on or after January 1, 2007, is applicable beginning January 1, 2007.

Par. 5. Section 300.3 is amended by adding paragraph (d) to read as follows:

§ 300.3 Offer to compromise fee.

* * * * *

(d) *Effective/applicability date.* This section is applicable beginning November 1, 2003.

Par. 6. Section 300.4 is amended by adding paragraph (d) to read as follows:

§ 300.4 Special enrollment examination fee.

* * * * *

(d) *Effective/applicability date.* This section is applicable beginning November 6, 2006.

Par. 7. Section 300.5 is amended by adding paragraph (d) to read as follows:

§ 300.5 Enrollment of enrolled agent fee.

* * * * *

(d) *Effective/applicability date.* This section is applicable beginning November 6, 2006.

Par. 8. Section 300.6 is amended by adding paragraph (d) to read as follows:

§ 300.6 Renewal of enrollment of enrolled agent fee.

* * * * *

(d) *Effective/applicability date.* This section is applicable beginning November 6, 2006.

Par. 9. Section 300.7 is amended by adding paragraph (d) to read as follows:

§ 300.7 Enrollment of enrolled actuary fee.

* * * * *

(d) *Effective/applicability date.* This section is applicable beginning January 22, 2008.

Par. 10. Section 300.8 is amended by adding paragraph (d) to read as follows:

§ 300.8 Renewal of enrollment of enrolled actuary fee.

* * * * *

(d) *Effective/applicability date.* This section is applicable beginning January 22, 2008.

Par. 11. Section 300.9 is added to read as follows:

§ 300.9 Fee for obtaining a preparer tax identification number.

(a) *Applicability.* This section applies to the application for and renewal of a preparer tax identification number pursuant to 26 CFR 1.6109–2(d).

(b) *Fee.* The fee to apply for or renew a preparer tax identification number is $50 per year, which is the cost to the government for processing the application for a preparer tax identification number and does not include any fees charged by the vendor.

(c) *Person liable for the fee.* The individual liable for the application or renewal fee is the individual applying for and renewing a preparer tax identification number from the IRS.

(d) *Effective/applicability date.* This section will be applicable on the date of publication of a Treasury decision adopting these rules as final regulations in the **Federal Register**.

Steven T. Miller,

Deputy Commissioner for Services and Enforcement.

[FR Doc. 2010–18198 Filed 7–21–10; 4:15 pm]

BILLING CODE 4830–01–P

ENVIRONMENTAL PROTECTION AGENCY

40 CFR Part 52

[EPA–R06–OAR–2007–0210; FRL–9177–5]

Approval and Promulgation of Air Quality Implementation Plans; Texas; Revisions to Emissions Inventory Reporting Requirements and Conformity of General Federal Actions, Including Revisions Allowing Electronic Reporting Consistent With the Cross Media Electronic Reporting Rule

AGENCY: Environmental Protection Agency (EPA).

ACTION: Proposed rule.

SUMMARY: The Environmental Protection Agency (EPA) is proposing to approve revisions to the Texas State Implementation Plan (SIP) submitted by the Governor of Texas and by the Texas Commission on Environmental Quality (TCEQ) respectively on December 17, 1999 and February 26, 2007. The revisions pertain to regulations on reporting air pollution emissions (emission inventories), and conformity of general Federal actions to SIPs. EPA is proposing to approve the revision pursuant to section 110 of the CAA.

DATES: Written comments should be received on or before August 23, 2010.

ADDRESSES: Comments may be mailed to Mr. Guy Donaldson, Chief, Air Planning Section (6PD–L), Environmental Protection Agency, 1445 Ross Avenue, Suite 1200, Dallas, Texas 75202–2733. Comments may also be submitted electronically or through hand deliver/courier by following the detailed instructions in the **ADDRESSES** section of the direct final rule located in the rules section of this **Federal Register**.

FOR FURTHER INFORMATION CONTACT: Emad Shahin, Air Planning Section (6PD–L), Environmental Protection Agency, Region 6, 1445 Ross Avenue, Suite 700, Dallas, Texas 75202–2733, telephone 214–665–6717; fax number 214–665–7263; e-mail address *shahin.emad@epa.gov.*

SUPPLEMENTARY INFORMATION: In the rules section of this **Federal Register**, EPA is approving the State's SIP submittal as a direct rule without prior proposal because the Agency views this as non-controversial submittal and anticipates no adverse comments. A detailed rationale for the approval is set forth in the direct final rule. If no adverse comments are received in response to this action no further activity is contemplated. If EPA receives adverse comments, the direct final rule will be withdrawn and all public comments received will be addressed in a subsequent final rule based on this proposed rule. EPA will not institute a second comment period. Any parties interested in commenting on this action should do so at this time.

For additional information see the direct final rule, located in the rules section of this **Federal Register**.

Dated: July 12, 2010.

Al Armendariz,

Regional Administrator, Region 6.

[FR Doc. 2010–17976 Filed 7–22–10; 8:45 am]

BILLING CODE 6560–50–P

ENVIRONMENTAL PROTECTION AGENCY

40 CFR Part 81

[EPA–R03–OAR–2010–0431; FRL–9178–9]

Approval of One-Year Extension for Attaining the 1997 8-Hour Ozone Standard in the Baltimore Moderate Nonattainment Area

AGENCY: Environmental Protection Agency (EPA).

ACTION: Proposed rule.

SUMMARY: EPA is proposing to extend the attainment date from June 15, 2010 to June 15, 2011 for the Baltimore nonattainment area, which is classified as moderate for the 1997 8-hour ozone national ambient air quality standard (NAAQS). This extension is based in part on air quality data for the 4th highest daily 8-hour monitored value during the 2009 ozone season. In the final rules section of this **Federal Register**, EPA is approving the State's request as a direct final rule without prior proposal because the Agency views this as a noncontroversial request and anticipates no adverse comments. A detailed rationale for the approval is set forth in the direct final rule. If no adverse comments are received in response to this action, no further activity is contemplated. If EPA receives adverse comments, the direct final rule will be withdrawn and all public comments received will be addressed in a subsequent final rule based on this

proposed rule. EPA will not institute a second comment period. Any parties interested in commenting on this action should do so at this time.

DATES: Comments must be received in writing by August 23, 2010.

ADDRESSES: Submit your comments, identified by Docket ID Number EPA–R03–OAR–2010–0431 by one of the following methods:

A. *http://www.regulations.gov.* Follow the on-line instructions for submitting comments.

B. *E-mail: fernandez.cristina@epa.gov.*

C. *Mail:* EPA–R03–OAR–2010–0431, Cristina Fernandez, Associate Director, Office of Air Program Planning, Mailcode 3AP30, U.S. Environmental Protection Agency, Region III, 1650 Arch Street, Philadelphia, Pennsylvania 19103.

D. *Hand Delivery:* At the previously-listed EPA Region III address. Such deliveries are only accepted during the Docket's normal hours of operation, and special arrangements should be made for deliveries of boxed information.

Instructions: Direct your comments to Docket ID No. EPA–R03–OAR–2010–0431. EPA's policy is that all comments received will be included in the public docket without change, and may be made available online at *http://www.regulations.gov,* including any personal information provided, unless the comment includes information claimed to be Confidential Business Information (CBI) or other information whose disclosure is restricted by statute. Do not submit information that you consider to be CBI or otherwise protected through *http://www.regulations.gov* or e-mail. The *http://www.regulations.gov* Web site is an "anonymous access" system, which means EPA will not know your identity or contact information unless you provide it in the body of your comment. If you send an e-mail comment directly to EPA without going through *http://www.regulations.gov,* your e-mail address will be automatically captured and included as part of the comment that is placed in the public docket and made available on the Internet. If you submit an electronic comment, EPA recommends that you include your name and other contact information in the body of your comment and with any disk or CD–ROM you submit. If EPA cannot read your comment due to technical difficulties and cannot contact you for clarification, EPA may not be able to consider your comment. Electronic files should avoid the use of special characters, any form of encryption, and be free of any defects or viruses.

Docket: All documents in the electronic docket are listed in the *http://www.regulations.gov* index. Although listed in the index, some information is not publicly available, *i.e.,* CBI or other information whose disclosure is restricted by statute. Certain other material, such as copyrighted material, is not placed on the Internet and will be publicly available only in hard copy form. Publicly available docket materials are available either electronically in *http://www.regulations.gov* or in hard copy during normal business hours at the Air Protection Division, U.S. Environmental Protection Agency, Region III, 1650 Arch Street, Philadelphia, Pennsylvania 19103. Copies of the State submittal are available at Maryland Department of the Environment, 1800 Washington Boulevard, Suite 705, Baltimore, Maryland 21230.

FOR FURTHER INFORMATION CONTACT: Gregory Becoat, (215) 814–2036, or by e-mail at *becoat.gregory@epa.gov.*

SUPPLEMENTARY INFORMATION: For further information, please see the information provided in the direct final action, with the same title that is located in the "Rules and Regulations" section of this **Federal Register** publication.

Dated: July 6, 2010.

W.C. Early,

Acting Regional Administrator, Region III.

[FR Doc. 2010–17970 Filed 7–22–10; 8:45 am]

BILLING CODE 6560–50–P

ENVIRONMENTAL PROTECTION AGENCY

40 CFR Part 300

[EPA–R03–SFUND–2010–0436; FRL–9177–9]

National Oil and Hazardous Substances Pollution Contingency Plan; National Priorities List: Intent to Partially Delete the Letterkenny Army Depot Southeastern (SE) Area and Letterkenny Army Depot Property Disposal Office (PDO) Area Superfund Sites

AGENCY: Environmental Protection Agency.

ACTION: Proposed rule.

SUMMARY: The Environmental Protection Agency (EPA) Region III is issuing a Notice of Intent to Delete portions of the Letterkenny Army Depot Southeastern (SE) Area and Letterkenny Army Depot Property Disposal Office (PDO) Area (Sites), located in Chambersburg, Franklin County, Pennsylvania, from the National Priorities List (NPL) and requests public comments on this proposed action. The NPL, promulgated pursuant to section 105 of the Comprehensive Environmental Response, Compensation, and Liability Act (CERCLA) of 1980, as amended, is an appendix of the National Oil and Hazardous Substances Pollution Contingency Plan (NCP). The EPA and the Commonwealth of Pennsylvania, through the Pennsylvania Department of Environmental Protection (PADEP), have determined that all appropriate response actions at these identified parcels under CERCLA, other than operation, maintenance, and five-year reviews, have been completed. However, this deletion does not preclude future actions under Superfund.

This partial deletion pertains to the soil and groundwater of parcels 24, 27, 28, 2–53, 2–53L, 2–54, 2–54L, 2–70, 2–70L, 3–89, 3–90, and 3–91. All other parcels within the site boundaries of the Letterkenny Army Depot SE and PDO Areas will remain on the NPL and are not being considered for deletion as part of this action.

DATES: Comments must be received by August 23, 2010.

ADDRESSES: Submit your comments, identified by Docket ID no. EPA–R03–SFUND–2010–0436, by one of the following methods:

- *http://www.regulations.gov.* Follow on-line instructions for submitting comments.
- *E-mail: hoover.gerald@epa.gov.*
- *Fax:* (215) 814–3025, Attn: Gerald Hoover.
- *Mail or Hand Delivery:* U.S. Environmental Protection Agency, Region III, Attn: Gerald Hoover (3HS11), 1650 Arch Street, Philadelphia, PA 19103–2029, Phone: (215) 814–2077. Business Hours: Mon. thru Fri.—9 a.m. to 4 p.m.

Such deliveries are only accepted during the Docket's normal hours of operation, and special arrangements should be made for deliveries of boxed information.

Instructions: Direct your comments to Docket ID no. EPA–R03–SFUND–2010–0436. EPA's policy is that all comments received will be included in the public docket without change and may be made available online at *http://www.regulations.gov,* including any personal information provided, unless the comment includes information claimed to be Confidential Business Information (CBI) or other information whose disclosure is restricted by statute. Do not submit information that you

consider to be CBI or otherwise protected through *http://www.regulations.gov* or e-mail. The *http://www.regulations.gov* Web site is an "anonymous access" system, which means EPA will not know your identity or contact information unless you provide it in the body of your comment. If you send an e-mail comment directly to EPA without going through *http://www.regulations.gov,* your e-mail address will be automatically captured and included as part of the comment that is placed in the public docket and made available on the Internet. If you submit an electronic comment, EPA recommends that you include your name and other contact information in the body of your comment and with any disk or CD–ROM you submit. If EPA cannot read your comment due to technical difficulties and cannot contact you for clarification, EPA may not be able to consider your comment. Electronic files should avoid the use of special characters, any form of encryption, and be free of any defects or viruses.

Docket

All documents in the docket are listed in the *http://www.regulations.gov* index. Although listed in the index, some information is not publicly available, *e.g.,* CBI or other information whose disclosure is restricted by statute. Certain other material, such as copyrighted material, will be publicly available only in hard copy. Publicly available docket materials are available either electronically in *http://www.regulations.gov* or in hard copy at:

U.S. EPA Region III, Library, 2nd Floor, 1650 Arch Street, Philadelphia, Pennsylvania, 19103–2029, Phone: (215) 814–5254, Business Hours: Mon. thru Fri.—8 am to 5 pm

Letterkenny Army Depot, Building 14, Chambersburg, PA 17201–4150, POC Bryan Hoke, 717–267–9836.

FOR FURTHER INFORMATION CONTACT: Gerald Hoover, Remedial Project Manager, U.S. Environmental Protection Agency, Region III, (3HS11) 1650 Arch St., Philadelphia, PA 19103–2029, (215) 814–2077

SUPPLEMENTARY INFORMATION: In the "Rules and Regulations" Section of today's **Federal Register**, we are publishing a direct final Notice of Partial Deletion for portions of the Letterkenny Army Depot SE and PDO Areas without prior Notice of Intent for Partial Deletion because EPA views this as a noncontroversial revision and anticipates no adverse comment. We have explained our reasons for this partial deletion in the preamble to the direct final Notice of Partial Deletion, and those reasons are incorporated herein. If we receive no adverse comment(s) on this partial deletion action, we will not take further action on this Notice of Intent for Partial Deletion. If we receive adverse comment(s), we will withdraw the direct final Notice of Partial Deletion and it will not take effect. We will, as appropriate, address all public comments in a subsequent final Notice of Partial Deletion based on this Notice of Intent for Partial Deletion. We will not institute a second comment period on this Notice of Intent for Partial Deletion. Any parties interested in commenting must do so at this time.

For additional information, see the direct final Notice of Partial Deletion which is located in the Rules section of this **Federal Register**.

List of Subjects in 40 CFR Part 300

Environmental protection, Air pollution control, Chemicals, Hazardous waste, Hazardous substances, Intergovernmental relations, Penalties, Reporting and recordkeeping requirements, Superfund, Water pollution control, Water supply.

Authority: 33 U.S.C. 1321(c)(2); 42 U.S.C. 9601–9657; E.O. 12777, 56 FR 54757, 3 CFR, 1991 Comp., p. 351; E.O. 12580, 52 FR 2923; 3 CFR, 1987 Comp., p. 193.

Dated: July 12, 2010.

William C. Early,

Acting Regional Administrator, Region III.

[FR Doc. 2010–17779 Filed 7–22–10; 8:45 am]

BILLING CODE 6560–50–P

DEPARTMENT OF LABOR

Office of Federal Contract Compliance Programs

41 CFR Part 60–741

RIN 1250–AA02

Affirmative Action and Nondiscrimination Obligations of Contractors and Subcontractors; Evaluation of Affirmative Action Provisions Under Section 503 of the Rehabilitation Act, as Amended

AGENCY: Office of Federal Contract Compliance Programs, Labor.

ACTION: Advance notice of proposed rulemaking.

SUMMARY: The Office of Federal Contract Compliance Programs (OFCCP) is issuing this Advance Notice of Proposed Rulemaking (ANPRM) in order to invite the public to provide input on how OFCCP can strengthen the affirmative action requirements of the regulations implementing section 503 of the Rehabilitation Act of 1973, as amended (Section 503). Strengthening affirmative action requirements will help increase the employment opportunities of people with disabilities in the Federal contractor sector.

DATES: All comments must be received on or before September 21, 2010.

ADDRESSES: You may submit comments, identified by RIN number 1250–AA02, by any of the following methods:

- *Federal eRulemaking Portal: http://www.regulations.gov.* Follow the instructions for submitting comments.
- *Mail and Hand Delivery/Courier:* Barbara J. Bingham, Acting Director, Division of Policy, Planning, and Program Development, Office of Federal Contract Compliance Programs, Room N3422, 200 Constitution Avenue, NW., Washington, DC 20210.

Receipt of submissions will not be acknowledged; however, the sender may request confirmation that a submission has been received by telephoning OFCCP at (202) 693–0102 (voice) or (202) 693–1337 (TTY) (these are not toll-free numbers).

All comments received, including any personal information provided, will be available Online at *http://www.regulations.gov* and for public inspection during normal business hours at Room C–3325, 200 Constitution Avenue, NW., Washington, DC 20210. People needing assistance to review comments will be provided with appropriate aids such as readers or print magnifiers. Copies of this Advance Notice of Proposed Rulemaking will be made available in the following formats: Large print, Braille, electronic file on computer disk, and audiotape. To schedule an appointment to review the comments and/or to obtain this Advance Notice of Proposed Rulemaking in an alternate format, contact OFCCP at the telephone numbers or address listed above.

FOR FURTHER INFORMATION CONTACT: Barbara J. Bingham, Acting Director, Division of Policy, Planning and Program Development, Office of Federal Contract Compliance Programs, 200 Constitution Avenue, NW., Room N3422, Washington, DC 20210. Telephone: (202) 693–0102 (voice) or (202) 693–1337 (TTY).

SUPPLEMENTARY INFORMATION: Federal contractors covered by section 503 of the Rehabilitation Act of 1973, as amended (Section 503) [1] are obligated to

[1] Covered contracts or subcontracts include those that exceed $10,000, and contracts or subcontracts for indefinite quantities, unless the purchaser has

ensure equal employment opportunity for people with disabilities. In addition, Section 503 requires Federal contractors to take affirmative action to employ and advance in employment individuals with disabilities. The existing Section 503 regulations require that covered contractors:

(1) Employ nondiscriminatory employment practices;

(2) Provide reasonable accommodations to qualified job applicants and employees with disabilities;

(3) After a job offer is extended but before employment begins, invite job applicants to voluntarily and confidentially self-identify as to whether or not they have a disability in order to benefit from any affirmative action programs covered contractors may have;

(4) Maintain personnel and employment records; and

(5) For those contractors and subcontractors with 50 or more employees and a contract of $50,000 or more, develop and maintain a written affirmative action program (AAP). Further information about the current Section 503 regulatory requirements may be found at *http://www.dol.gov/ofccp/regs/compliance/ca_503.htm.*

Section 503 regulations promote equal employment opportunity for applicants and employees with disabilities, yet the percentage of people with disabilities *not* in the labor force as well as the unemployment rate of people with disabilities are high. According to recent data from the U.S. Department of Labor's Bureau of Labor Statistics, the percentage of people with disabilities in the labor force in March 2010 was 22.5 compared with 70.2 for persons with no disability. The unemployment rate for those with disabilities was 13.9 percent, compared with 10.1 percent for persons with no disability, not seasonally adjusted. Regulations implementing Section 503 have not undergone a comprehensive review and revision since May 1, 1996. It is time for OFCCP to reexamine its affirmative action provisions under Section 503 to make them more effective and to help ensure that more people with disabilities are employed and are given the opportunity to advance in employment in the Federal contracting labor force.

Determining how covered contractors can effectively increase employment opportunities for people with disabilities requires an understanding of the range of successful evidence-based practices employers use to recruit, hire, retain, and advance people with disabilities in employment. Among the key factors in measuring progress in this area is the existence of current and discrete statistical information that is valid and reliable. In an effort to enhance the affirmative action provisions under Section 503, OFCCP is considering adopting measures similar to those required under the Executive Order 11246 program for supply and service contractors. Under that program, covered contractors are required, among other things, to compare the percentage of women and minorities in each job group at an establishment with the availability of women and minorities to work in the job group. Availability is a percentage estimate of those women and minorities who are qualified for employment in the job group within the relevant recruitment area. Contractors typically rely on Census Bureau data, state employment service data, and college graduation data in developing their availability factors.

Before publishing a proposed regulation, OFCCP seeks comments from members of the public on the issues under consideration to assist with making informed decisions regarding proposed regulatory changes. As a first step towards this goal, OFCCP conducted a Web based listening session and three Town Hall listening sessions in Chicago, San Francisco and New Orleans offering information on how interested stakeholders could participate in the official rulemaking process, and providing an opportunity for stakeholders to offer suggestions and recommendations for strengthening the equal employment opportunity and affirmative action requirements of Section 503. In developing a notice of proposed rulemaking to amend the Section 503 regulations, OFCCP will consider comments elicited in those listening sessions and information provided in response to this ANPRM.

The second step towards publishing a notice of proposed rulemaking is to request comments and data from the public on the following issues.

Request for Comments

OFCCP is seeking public comment on the following inquiries:

1. How can the affirmative action requirements of Section 503 be strengthened to measurably increase employment opportunities of covered contractors for individuals with disabilities? If available, include examples or information illustrating the effectiveness of the suggested new requirements.

2. What measures have contractors and subcontractors taken to fulfill the current affirmative action requirements of Section 503? How much did these measures cost?

3. What barriers currently impede Federal contractors from hiring people with disabilities?

4. Are there changes that could be made to the existing language on permissible qualifications standards [2] that would better ensure equal employment opportunities for individuals with disabilities?

5. If OFCCP were to require Federal contractors to conduct utilization analyses and to establish hiring goals for individuals with disabilities, comparable to the analyses and establishment of goals required under the regulations implementing Executive Order 11246, what data should be examined in order to identify the appropriate availability pool of such individuals for employment?

6. Would the establishment of placement goals for individuals with disabilities measurably increase their employment opportunities in the Federal contractor sector? Explain why or why not.

7. What experience have Federal contractors had with respect to disability employment goals programs voluntarily undertaken or required by state, local or foreign governments?

8. What specific employment practices have been verifiably effective in recruiting, hiring, advancing, and retaining individuals with disabilities?

9. To what extent does workplace flexibility, including flexibility in work schedules, as well as job-protected leave, impact recruitment and retention of individuals with disabilities?

10. Has training of employees and/or managers been effective in increasing advancement and/or retention of individuals with disabilities? If so, how?

11. Federal contractors are required to invite all job applicants to voluntarily and confidentially identify their race and gender pre-offer. The collection of this information allows contractors to monitor the impact of their employment practices by race and gender and to assess progress in meeting their affirmative action goals. Existing Section 503 regulations require contractors to invite applicants to voluntarily and confidentially self-identify as a person with a disability after making an offer of employment but before the applicant begins employment. (*See* 41 CFR 60–741.42(a).) Would amending the Section 503

reason to believe that the cost in any one year will not exceed $10,000.

[2] 41 CFR 60–741.44b & c—Required contents of affirmative action programs. To view, go to *http://www.dol.gov/dol/allcfr/Title_41/Part_60-741/41CFR60-741.44.htm.*

regulations to require contractors to invite all applicants to voluntarily and confidentially self-identify if they have a disability prior to an offer of employment enhance a federal contractor's ability to more effectively monitor their hiring practices with respect to applicants with disabilities? Note that a Section 503 regulation requiring contractors to invite voluntary and confidential self-identification as an applicant with a disability pre-offer for affirmative action purposes would not violate the Americans with Disabilities Act. 29 CFR 1630.15(e); Enforcement Guidance: Preemployment Disability-Related Questions and Medical Examinations (EEOC Notice Number 915.002, October 10, 1995).

12. How can linkage agreements between Federal contractors and organizations that focus on the employment of individuals with disabilities be strengthened to increase effectiveness? Do linkage agreements have better outcomes when higher level company officials are responsible for their implementation/execution? Include examples of cooperative agreements between employers and disability or community recruitment organizations that have been helpful in hiring persons with disabilities.

13. What impact would result from requiring that Federal contractors and subcontractors make information and communication technology used by job applicants in the job application process, and by employees in connection with their employment fully accessible and usable by individuals with disabilities? [3] What are the specific costs and/or benefits that might result from this requirement?

14. What other specific changes to the Section 503 regulations might improve the recruitment, hiring, retention, and advancement of individuals with disabilities by Federal contractors?

15. *Regulatory Flexibility Act*—Consistent with the Regulatory Flexibility Act, the Department must consider the impacts of any proposed rule on small entities, including small businesses, small nonprofit organizations and small governmental jurisdictions with populations under 50,000. In response to this ANPRM, the Department encourages small entities to provide data on how additional requirements under Section 503 may impact them.

16. OFCCP seeks public comment on the types of small entities and any estimates of the numbers of small entities that may be impacted by this rule.

17. OFCCP seeks public comment on the potential costs of additional 503 requirements on small entities.

18. OFCCP seeks public comment on any possible alternatives to the proposed measures that would allow the agency to achieve their regulatory objectives while minimizing any adverse impact to small businesses.

OFCCP encourages any interested party to comment on these questions.

Patricia A. Shiu,

Director, Office of Federal Contract Compliance Programs.

[FR Doc. 2010–18104 Filed 7–22–10; 8:45 am]

BILLING CODE 4510–CM–P

[3] For example, requiring that contractors ensure that application and testing kiosks are fully accessible and usable by individuals with disabilities, and that contractors strive to ensure that their Internet and Intranet Web sites satisfy the United States Access Board's accessibility standards for technology used by the Federal Government and subject to section 508 of the Rehabilitation Act.

DEPARTMENT OF COMMERCE

National Oceanic and Atmospheric Administration

50 CFR Part 679

[Docket No. 0912021424–0287–02]

RIN 0648–AY42

Fisheries of the Exclusive Economic Zone Off Alaska; Gulf of Alaska License Limitation Program

AGENCY: National Marine Fisheries Service (NMFS), National Oceanic and Atmospheric Administration (NOAA), Commerce.

ACTION: Proposed rule; request for comments.

SUMMARY: NMFS proposes regulations to implement Amendment 86 to the Fishery Management Plan for Groundfish of the Gulf of Alaska. This proposed action would add a Pacific cod endorsement on licenses issued under the License Limitation Program (LLP) in specific management areas if those licenses have been used on vessels that met minimum recent landing requirements using non-trawl gear, commonly known as fixed gear. This proposed action would exempt vessels that use jig gear from the requirement to hold an LLP license, modify the maximum length designation on a specific set of fixed gear licenses, and allow entities representing specific communities to receive a limited number of fixed-gear licenses with Pacific cod endorsements. This proposed action is intended to promote the goals and objectives of the Magnuson-Stevens Fishery Conservation and Management Act, the Fishery Management Plan, and other applicable law.

DATES: Comments must be received no later than September 7, 2010.

ADDRESSES: Send comments to Sue Salveson, Assistant Regional Administrator, Sustainable Fisheries Division, Alaska Region, NMFS, Attn: Ellen Sebastian. You may submit comments, identified by "0648–AY42", by any one of the following methods:

- *Electronic Submissions:* Submit all electronic public comments via the Federal eRulemaking Portal Web site at *http://www.regulations.gov.*
- *Mail:* P.O. Box 21668, Juneau, AK 99802.
- *Fax:* 907–586–7557.
- *Hand delivery to the Federal Building:* 709 West 9th Street, Room 420A, Juneau, AK.

All comments received are a part of the public record and will generally be posted to *http://www.regulations.gov* without change. All Personal Identifying Information (*e.g.,* name, address) voluntarily submitted by the commenter may be publicly accessible. Do not submit Confidential Business Information or otherwise sensitive or protected information.

NMFS will accept anonymous comments (enter N/A in required fields if you wish to remain anonymous). Attachments to electronic comments will be accepted in Microsoft Word, Excel, WordPerfect, or Adobe portable document file (pdf) formats only.

Written comments regarding the burden-hour estimates or other aspects of the collection-of-information requirements contained in this rule may be submitted to NMFS at the above address, e-mailed to *David_Rostker@omb.eop.gov,* or faxed to 202–395–7285.

Copies of Amendment 86, the Environmental Assessment (EA), Regulatory Impact Review (RIR), and the Initial Regulatory Flexibility Analysis (IRFA) for this action are available from the Alaska Region Web site at *http://www.alaskafisheries.noaa.gov*.

FOR FURTHER INFORMATION CONTACT: Glenn Merrill, 907–586–7228.

SUPPLEMENTARY INFORMATION:

Background on the License Limitation Program

National Marine Fisheries Service (NMFS) manages the groundfish fisheries in the exclusive economic zone (EEZ) of the Bering Sea and Aleutian Islands Management Area (BSAI) and the Gulf of Alaska (GOA) under the

Fishery Management Plans (FMPs) for groundfish in the respective areas. The North Pacific Fishery Management Council (Council) recommended, and NMFS approved, the FMPs under the authority of the Magnuson-Stevens Fishery Conservation and Management Act (16 U.S.C. 1801 *et seq.*). Regulations implementing the FMPs appear at 50 CFR part 679. General regulations governing U.S. fisheries also appear at 50 CFR part 600.

The Council and NMFS have long sought to control the amount of fishing in the North Pacific Ocean to ensure that fisheries are conservatively managed and do not exceed established biological thresholds. One of the measures used by the Council and NMFS is the license limitation program (LLP), which limits access to the groundfish, crab, and scallop fisheries in the BSAI and GOA. The LLP is intended to limit entry into Federally managed fisheries. For groundfish, the LLP requires that persons hold and assign a license for each vessel that is used to fish in Federally managed fisheries, with some limited exemptions. The Council initially envisioned the LLP as an early step in a long-term plan to establish a comprehensive rationalization program for groundfish in the North Pacific. Rationalization programs assign tradable quotas to fishery participants that would provide them an exclusive access privilege to groundfish resources. These exclusive access programs are more commonly known as limited access privilege programs (LAPPs).

The LLP for groundfish fisheries was recommended by the Council as Amendments 39 and 41 to the BSAI and GOA groundfish FMPs, respectively. The Council adopted the LLP for groundfish in June 1995, and NMFS approved Amendments 39 and 41 on September 12, 1997. NMFS published a final rule to implement the LLP on October 1, 1998 (63 FR 52642), and LLP licenses were required for Federal groundfish fisheries beginning on January 1, 2000. The preamble to the final rule implementing the groundfish LLP and the EA/RIR/IRFA prepared for this proposed action describe the rationale and specific provisions of the LLP in greater detail (*see* **ADDRESSES**) and are not repeated here. The key components of the LLP are briefly summarized below.

The LLP for groundfish establishes specific criteria that must be met to allow a person to deploy a vessel to directed fish in most federally managed groundfish fisheries. An LLP license must be assigned to each vessel that is used to participate in directed fishing for most groundfish species. The term directed fishing and the specific groundfish species for which an LLP license is required are defined in regulations at § 679.2. Exceptions to the LLP license requirement apply if the vessel is less than 26 feet in length overall (LOA) and fishing in the GOA; less than 32 feet LOA and fishing in the BSAI; or less than 60 feet LOA, using jig gear in the BSAI, and deploying no more than five jigging machines (See § 679.4(k)(2)).

Under the LLP, NMFS issues licenses that: (1) Endorse fishing activities in specific regulatory areas in the BSAI and GOA; (2) restrict the length of the vessel on which the LLP license may be used, known as the maximum length overall (MLOA); (3) designate the fishing gear that may be used on the vessel (*i.e.,* trawl or non-trawl gear designations); and (4) designate the type of vessel operation permitted (*i.e.,* LLP licenses designate whether the vessel to which the LLP is assigned may operate as a catcher vessel or as a catcher/processor). The endorsements for specific regulatory areas, gear designations, or vessel operational types are non-severable from the LLP license (*i.e.,* once an LLP license is issued, the components of the LLP license cannot be transferred independently). By creating LLP licenses with these characteristics, the Council and NMFS limited the ability of a person to assign an LLP license that was derived from the historic landing activity of a vessel in one area using a specific fishing gear, or operational type, to be used in other areas, with other gears, or with other operational types in a manner that could expand fishing capacity. The preamble to the final rule implementing the groundfish LLP provides a more detailed explanation of the rationale for specific provisions in the LLP (October 1, 1998, 63 FR 52642).

When the Council initially recommended the LLP, the Council intended that NMFS determine whether a vessel met a minimum number of landings to qualify the owner of that vessel to receive an LLP license with a specific gear, area, and operational type endorsement. However, the regulations that implemented the LLP used the phrase "documented harvest" instead of "landing." NMFS asserted that the phrase documented harvest was synonymous with the phrase landing, and that the phrase documented harvest provided additional clarity to the public that the phrase landing did not. NMFS' assertion that these two phrases were synonymous was subsequently challenged in court (*Trojan Partnership* v. *Gutierrez,* 425 F. 3d 620 (9th Cir. 2005)). The Court held that these phrases were not synonymous. In order to be consistent with Council intent when originally implementing the LLP, as well as the specific criteria recommended by the Council for this proposed action, this action proposes to use landings, and not documented harvests, as the basis for determining whether an LLP license holder will meet the proposed regulatory requirements for Amendment 86.

The regulatory areas for which LLP licenses were issued include: The Bering Sea (BS), Aleutian Islands (AI); Southeast Outside District (SEO); Central Gulf of Alaska (CG), which includes the West Yakutat District adjacent to the SEO; and Western Gulf of Alaska (WG). The documented harvest requirements necessary to receive an LLP license endorsed for a specific area differed depending on the size of the vessel and the operational type of the vessel. For example, for a vessel owner to receive an endorsement for non-trawl gear in the CG with a catcher/processor designation, a vessel must have met the minimum documented harvest requirements in the CG using non-trawl gear and the documented harvests must have been caught and processed onboard the vessel.

In 2000, NMFS issued groundfish LLP licenses with the appropriate regulatory area endorsements, gear, vessel length, and vessel operational type designations based on the documented harvests of vessels. NMFS issued more than 300 LLP licenses endorsed for trawl gear, and more than 1,000 licenses for non-trawl gear for use in the BSAI and GOA. Non-trawl gear is commonly known as fixed gear and includes hook-and-line, pot, and jig gear. In many cases trawl and fixed gear LLP licenses were endorsed for multiple regulatory areas (*e.g.,* WG, CG, and BS) if a vessel met the minimum number of documented harvests in more than one area. Additionally, a number of LLP licenses were also designated for both trawl and fixed gear in cases where the vessel met the documented harvests requirements using both trawl and fixed gear.

After LLP licenses were initially issued in 2000, NMFS became aware, through public testimony from fishing industry representatives and an independent review of landings data, that a substantial number of trawl and/or fixed gear endorsed LLP licenses were not being used for fishing in some, or all, of the regulatory areas for which they were endorsed. A variety of factors may result in the lack of use of an LLP license, including poor economic conditions in groundfish fisheries,

choices by LLP license holders to focus on fisheries such as salmon or halibut that do not require the use of an LLP license, or other reasons specific to a license holder. LLP licenses that are valid but are not currently being used on a vessel are commonly known as "latent" LLP licenses.

In early 2007, the Council began reviewing the use of trawl-endorsed LLP licenses in the GOA and BSAI. In April 2008, after more than a year of review, development of an analysis, and extensive public comment, the Council adopted Amendment 92 to the BSAI FMP and Amendment 82 to the GOA FMP, both of which modified the LLP regarding eligibility criteria for trawl endorsements on LLP licenses. Amendments 92 and 82 removed trawl endorsements from LLP licenses that did not meet specific landing requirements during 2000 through 2006. NMFS published a notice of availability for Amendments 92 and 82 on December 12, 2008 (73 FR 75659). A proposed rule was published on December 30, 2008 (73 FR 79773). NMFS approved Amendments 92 and 82 on March 16, 2009, and published a final rule implementing them on August 14, 2009 (74 FR 41080).

In late 2007, the Council began a similar process of reviewing the use of LLP licenses endorsed for fixed gear in the GOA. This review was initiated primarily at the request of active GOA fixed gear fishery participants who were concerned that holders of latent fixed-gear endorsed LLP licenses could resume fishing under the licenses in the future and thereby adversely affect active GOA fixed gear LLP licenses holders' fishing operations as well as the biological health of the fishery. Specifically, fixed-gear participants were concerned about the potential effects of additional effort in the GOA Pacific cod fishery that could increase competition and overcapacity in the fishery. Pacific cod is the primary fishery targeted by vessels using fixed gear in the GOA. In both the CG and WG regulatory areas, approximately one-fourth of the eligible LLP licenses were actively being used. The potential overcapacity from the remaining latent LLP licenses could have adverse effects on management of the fisheries. Increased fishery effort could make it more difficult for NMFS to close fisheries in a timely manner, thereby exceeding the total allowable catch (TAC) for a fishery.

During the development of this proposed action, the Council also received input from the public requesting modification to the LLP to establish minimum landing requirements that must be met to allow a vessel to continue to participate in the Pacific cod fixed-gear fisheries in the GOA consistent with the approach adopted by the Council in 2002, under Amendment 67 to the FMP for groundfish of the BSAI (April 15, 2002, 67 FR 18129). Amendment 67 established a Pacific cod endorsement on LLP licenses that is required for vessels using hook-and-line and pot gear to participate in the directed fishery for Pacific cod in the BSAI. The term "directed fishing" is defined in regulation at § 679.2 and includes retained catch of Pacific cod that exceeds a minimum proportion of the total retained catch onboard a vessel. In April 2009, after more than a year of review and extensive public comment, the Council recommended modifications to the LLP to revise eligibility criteria for fixed gear endorsements on LLP licenses. The Council amended its final action in December 2009 to incorporate a change in the specific method used to allocate Pacific cod endorsed LLP licenses for specific persons (see the description under Action 4 of this preamble for additional detail).

Proposed Action

This proposed rule would implement four different actions, all of which were components of the Council's final action.

- Action 1: Establish a GOA Pacific cod endorsement for fixed gear LLP licenses.
- Action 2: Exempt certain vessels using jig gear in the GOA from the requirement to carry an LLP license.
- Action 3: Modify the MLOA of certain LLP licenses.
- Action 4: Allow specific GOA community entities to request and receive LLP licenses with a Pacific cod endorsement.

The rationale and effects of these four proposed actions are described in detail in the following sections.

Action 1: Establish a Pacific Cod Endorsement for Fixed Gear LLP Licenses

Background

Since the issuance of LLP licenses in 2000, substantially fewer LLP licenses endorsed for fixed-gear fisheries have been used onboard vessels than were originally issued. Approximately one-fourth of the eligible fixed gear LLP licenses have been actively used in recent years. The EA/RIR/IRFA prepared for this proposed action (see **ADDRESSES**) describes in detail the number of latent LLP licenses and potential reasons that a substantial proportion of fixed gear endorsed LLP licenses have been latent in the Pacific cod fishery (*e.g.,* vessels to which the LLP licenses have been assigned have not made any landings of Pacific cod) since their issuance. Factors leading to reduced participation in the fixed-gear Pacific cod fishery in the GOA since 2000 include lower TAC and regulations implemented to protect Steller sea lions (*Eumetopias jubatus*) that establish area and seasonal restrictions on the directed fishery for Pacific cod.

However, diminished opportunities in other fisheries could provide an incentive for latent LLP license holders to re-enter the Pacific cod fisheries. For example, reduced fishing opportunities in pollock or other groundfish fisheries could encourage vessel owners to shift effort to the Pacific cod fishery. The Council was concerned that as management measures are implemented for other fisheries that limit access to those fisheries, such as limited access privilege programs that allocate specific exclusive harvest privileges, latent LLP holders could enter fisheries such as the GOA Pacific cod fixed gear fishery. The Council sought to ensure the continued participation of active participants in the fishery and reduce potential adverse effects on fishery stocks that may occur if catch limits are exceeded. Potentially, an increase in effort in fully utilized fisheries, such as Pacific cod, could increase the risk of harvesters exceeding TAC before NMFS could close the fisheries. Additionally, it is possible that harvesters reentering the fixed-gear Pacific cod fishery may not have as much familiarity with specific fishery techniques or areas as current participants. These newer participants could fish in ways that would increase overall bycatch of non-Pacific cod species (*e.g.,* halibut) relative to the current and more experienced fixed-gear vessel operators. As noted in Section 2.2.3 of the EA/RIR/IRFA, Pacific cod fishery seasons have shortened over the last several years. Shorter season lengths restrict fishing opportunities for those permit holders who depend on the fishery. The EA/RIR/IRFA notes that it is difficult to predict how fishery effort may shift in the future, but a large number of latent LLP licenses do exist, and their entry in the Pacific cod fishery would destabilize current fishery participants.

Therefore, NMFS proposes this rule to assign Pacific cod endorsements to LLP licenses that have met minimum landing requirements during 2002 through December 8, 2008, or that meet a specific exemption described below. This action would preemptively reduce

the potential adverse affects of overharvesting the GOA Pacific cod resource if latent LLP license holders became active in the fishery.

Criteria for Assigning a Pacific Cod Endorsement

The primary action of this proposed rule would be to assign a Pacific cod fishery endorsement to a LLP license based on landings in the directed Pacific cod fishery in the GOA from 2002 through December 8, 2008 made by vessels operating under the authority of that LLP license. NMFS would assign Pacific cod endorsements that are designated for (1) hook-and-line, pot, or jig gear; (2) specific GOA regulatory areas (i.e., CG and WG); and (3) specific operational types (*i.e.,* catcher vessels or catcher/processors). LLP licenses with an MLOA less than 60 feet would have different landing requirements compared to LLP licenses with an MLOA equal to or greater than 60 feet. Table 1 summarizes the landing requirement criteria that would need to be met for each gear type, regulatory area, operational type, and MLOA of the LLP license.

TABLE 1—SUMMARY OF LANDING REQUIREMENTS FOR A FIXED GEAR PACIFIC COD ENDORSEMENT

Regulatory area	Gear type	Operational type	MLOA of LLP license	Landing requirement in the Pacific cod directed fishery from 2002 through December 8, 2008
CG	Hook-and-line	Catcher vessel	< 60 feet	10 metric tons (mt).
			≥ 60 feet	50 mt.
		Catcher/Processor	All	50 mt.
	Jig*	Catcher vessel	All	1 landing.
		Catcher/Processor	All.	
	Pot	Catcher vessel	< 60 feet	10 mt.
			≥ 60 feet	50 mt.
		Catcher/Processor	All	50 mt.
WG	Hook-and-line	Catcher vessel	< 60 feet	10 mt.
			≥ 60 feet	50 mt.
		Catcher/Processor	All	50 mt.
	Jig*	Catcher vessel	All	1 landing.
		Catcher/Processor	All.	
	Pot	Catcher vessel	< 60 feet	10 mt.
			≥ 60 feet	50 mt.
		Catcher/Processor	All	50 mt.

*LLP licenses and Pacific cod endorsements would be required only if a vessel uses more than five jigging machines, five lines, and more than 30 hooks per line.

The Council recommended establishing a fixed gear LLP endorsement for Pacific cod to reduce the risk that vessel operators could assign latent LLP licenses to other vessels, effectively reactivating those licenses and thereby increasing the amount of fixed gear effort in the Pacific cod fisheries. This additional effort could increase the harvest rate in the fixed-gear Pacific cod fishery as well as adversely affect currently active participants by increasing competition, diluting their potential gross revenues, and creating incentives for harvesters to race for fish in a potentially wasteful manner. This proposed action would effectively remove the potential for new effort in the fishery beyond currently active participants, as defined by this proposed action. This proposed action would provide additional control on fishing effort in the GOA Pacific cod fishery that is not provided under the current structure of the LLP.

This proposed action does not include modifications to SEO-endorsed licenses because fishing effort in this regulatory area is currently low. The risk of additional effort in the fishery from latent fixed gear LLP license holders was deemed to be unlikely by the Council given the relatively small number of eligible LLP licenses and the TAC for Pacific cod in the SEO. This action does not include the BS or AI regulatory areas. A Pacific cod endorsement requirement has already been established for LLP licenses using fixed gear in these areas under Amendment 67 to the BSAI FMP (April 15, 2002, 67 FR 18129).

Rationale for Landing Requirements

The Council considered a range of options and alternatives to determine the minimum number of landings required to receive a Pacific cod endorsement. The Council considered alternatives that would have required a minimum number of landings or minimum amounts of landings during 2000, the first year that LLP licenses were issued, through December 8, 2008. The Council also considered applying the minimum landing requirement to specific regulatory areas, or the landing requirements to the GOA more generally. The range of years was selected by the Council based on the first year that NMFS could definitively assign landings data to a specific LLP license (2002), and a period year that represented the last year for which NMFS had data available on recent participation in the Pacific cod fisheries (December 8, 2008). The specific date of December 8, 2008, corresponds to the date that the Council selected as a control date after which landings would not be considered for purposes of qualifying for a Pacific cod endorsement. The Council recommended a control date to ensure that fishery participants did not engage in fishing practices for the sole purpose of qualifying for a Pacific cod endorsement, and to ensure that fishery landings represent sustained participation in the directed Pacific cod fishery. The Council balanced more recent participation against considerations of economic dependence and historical fishing practices when selecting the nearly seven-year time frame from 2002 through December 8, 2008. Groundfish harvested incidentally by vessels participating in the halibut and sablefish individual fishing quota fisheries is excluded for the purpose of determining recent participation for this action because it is not considered directed fishing for Pacific cod.

The Council recommended that only catch from vessels fishing under the Federal TAC in either the Federal or parallel fishery would be included. The Federal TAC may be harvested in Federal waters, or in State of Alaska waters under a "parallel fishery." A parallel fishery occurs when the State opens State waters concurrent with the

Federal fishing season to allow vessels to access the Federal TAC in both State and Federal waters. The Council recommended including this catch because both of these fisheries have participants that are subject to Federal regulation, and vessels transit between State and Federal waters when harvesting Pacific cod assigned to the TAC. Catch from vessels fishing in the State of Alaska's GHL Pacific cod fishery would not be included as qualifying catch to meet the requirements for a Pacific cod endorsement because this catch is not Federally managed, is not subject to the TAC, and is managed exclusively by the State of Alaska.

After a review of groundfish catch history, the Council determined that different landing criteria should apply to different gear types, vessel operation types, and LLP MLOAs during the seven-year period from 2002 through December 8, 2008. The landing criteria recommended by the Council represent a minimal, but sufficient, amount of participation in the Pacific cod fishery to indicate some level of dependence on the fishery. The Council recommended that landing requirements apply to each regulatory area so that endorsements could be removed only for those regulatory areas where minimum landing requirements were not met. Therefore, LLP licenses that were active in more than one regulatory area might meet the minimum landing requirements in one area but not another. The Council recommended this action to accomplish the goals of reducing the effects of potentially hundreds of new entrants into the Pacific cod fishery.

For pot and hook-and-line catcher vessel endorsed LLP licenses with an MLOA of less than 60 feet, at least 10 metric tons (mt) of landings in the directed Pacific cod fishery in total between the fishing years 2002 through December 8, 2008 must have been made under the authority of that LLP license in a regulatory area to allow that LLP license to qualify for a Pacific cod endorsement. The Council considered alternatives that would have required a minimum of one landing and a maximum of 100 mt. The choice of 10 mt was based on extensive public testimony indicating that less restrictive criteria (*e.g.,* one landing, three landings, five landings, or five mt) would provide endorsements to LLP licenses that had only sporadic and limited participation in the Pacific cod fishery between 2002 and December 8, 2008. A review of participation patterns in the fishery (*see* Section 3.2.2 of the EA/RIR/IRFA) indicated that at higher catch thresholds (*i.e.,* 25 mt and 100 mt), substantially fewer LLP licenses with a less than 60-foot MLOA would receive a Pacific cod endorsement (*see* Section 3.3.2 of the EA/RIR/IRFA). The Council sought to balance the goal of recognizing past participation and some degree of dependence on the Pacific cod fishery with the goal of not excluding LLP licenses used on relatively smaller vessels that were active in the fishery but that may not have had extensive catch due to the loss of the vessel, changes in fishery conditions, or other factors.

For hook-and-line and pot catcher vessel-endorsed LLP licenses with an MLOA equal to or greater than 60 feet, and for all catcher/processor-endorsed LLP licenses regardless of the MLOA on the license, the Council selected a threshold of 50-mt total landings over the applicable period to qualify for the endorsement. The Council selected this higher landing threshold because vessels using LLP licenses with a catcher/processor endorsement or an MLOA equal to or greater than 60 feet typically have larger harvests than vessels less than 60 feet LOA. The Council sought to balance the goals of recognizing current participants in the Pacific cod fishery and granting Pacific cod endorsements only to participants who were consistently active in the fishery. The Council relied upon public testimony and a review of NMFS data showing participation patterns in the fishery (see Section 2.5 of the EA/RIR/IRFA) indicating that lower landing criteria (e.g., one, three, or five landings and 5, 10 and 25 mt) could qualify a number of LLP licenses that had been used less consistently in the fishery compared to a fewer number of LLP licenses at higher catch thresholds. The Council, however, did not select the most restrictive landing threshold reviewed (*i.e.,* 100 mt) because substantially fewer LLP licenses for hook-and line and pot catcher vessels would receive a Pacific cod endorsement than under less restrictive criteria (see Section 2.5 of the EA/RIR/IRFA). The Council's recommendations balanced the goals of reducing latent capacity in the Pacific cod fishery while providing continuing opportunities for participants with a history of participation in the fishery.

For vessels using jig gear, regardless of size, the Council selected the least restrictive landing threshold analyzed (one landing) as a basis for assigning a jig Pacific cod endorsement. The one landing threshold was chosen based on a review of landings data that indicated that very few LLP licenses would receive Pacific cod endorsements under more restrictive landings criteria (see Section 3.3.2 of the EA/RIR/IRFA). Overall, the analysis prepared for this action estimates that very few jig gear endorsements for catcher vessels would be issued for jig gear under the one landing threshold (19 Pacific cod endorsements in the CG and 11 in the WG). No jig gear endorsements would be issued to LLP licenses with a catcher/processor endorsement because no vessel used a catcher/processor endorsed LLP licenses to fish for Pacific cod with jig gear during the qualifying period. The Council considered more restrictive landing criteria as unnecessary given the limited number of endorsements that would be issued and the relatively limited harvest capacity of jig gear relative to pot or hook-and-line gear.

A Pacific cod endorsement would be required on all LLP licenses assigned to vessels using fixed gear to directed fish for Pacific cod in the GOA. Catcher vessels that use jig gear and meet specific vessel size and gear requirements would be exempt from the requirement to use an LLP license with a Pacific cod endorsement. This exemption is described in detail under Action 2. Other than the exemption described under Action 2, all vessels using fixed gear that are required to have an LLP license when fishing under the Federal TAC in either Federal or State waters would be required to have a Pacific cod endorsement on the LLP license when directed fishing for Pacific cod. However, this requirement would not apply to vessels fishing in the Pacific cod GHL fishery, which is managed exclusively by the State.

Under this amendment, if a vessel, or vessels, to which an LLP license has been assigned meets minimum landings requirements applicable to a type of fixed gear and LLP license MLOA in a specific regulatory area during the period 2002 through December 8, 2008, then the LLP license used on that vessel, or vessels, would be assigned a Pacific cod fixed gear endorsement for those specific gear type(s) or specific regulatory area(s). .An LLP license could qualify for more than one endorsement (*i.e.,* pot, hook-and-line, and/or jig) if it has qualified landings using more than one gear type.

In addition to issuing fixed gear endorsements based on directed harvests of Pacific cod during the 2002 through December 8, 2008 period, NMFS would issue Pacific cod endorsements to a limited number of LLP licenses that meet specific conditions even if those LLP licenses did not meet the minimum landing requirements. Specifically, NMFS

would assign Pacific cod endorsements to LLP licenses that currently: (1) Have a catcher/processor endorsement; (2) were assigned to vessels that did not meet minimum landing requirements to qualify for a Pacific cod endorsement for catcher/processors using hook-and-line gear in either regulatory area where those LLP licenses are endorsed; and (3) were assigned to vessels that participated in industry efforts to reduce halibut prohibited species catch (PSC) in the directed Pacific cod fishery in the GOA during 2006, 2007, or 2008.

This provision is intended to ensure that LLP license holders who decided not to use their vessels in the GOA during 2006, 2007, or 2008, in order to minimize halibut PSC through voluntary private contractual arrangements among hook-and-line catcher/processors would receive a Pacific cod endorsement. NMFS has a record of all LLP licenses that were used on catcher/processor vessels participating in the voluntary private contractual arrangements from 2006 through 2008. NMFS would publish a table in the regulation that lists all LLP licenses that would receive a Pacific cod endorsement under this exemption to facilitate the administration of this provision, and notify the public about the specific LLP licenses that would receive a Pacific cod endorsement. A preliminary list of LLP licenses, based on the best available catch data, eligible for this exemption (and thus able to receive an endorsement) appears at table 2 of this preamble.

In some cases, an LLP license may be eligible to receive an endorsement if it meets the landing requirement in either the CG or WG, and it may qualify for the exemption in the other regulatory area if it did not otherwise meet the landing requirement in that area. Table 2 notes whether an LLP license qualifies for the exemption in an area, qualifies under the landing requirements in an area, or does not meet eligibility requirements under either the exemption or the landing requirements. An LLP license would not be eligible for an endorsement exemption to a regulatory area if that LLP license had not been assigned an endorsement for that area prior to this proposed action.

TABLE 2—LLP LICENSES QUALIFYING FOR HOOK-AND-LINE CATCHER/PROCESSOR ENDORSEMENT EXEMPTION

LLP License No.	Eligible for CG endorsement exemption	Eligible for WG endorsement exemption
LLG 1400	Yes	No (Qualifies under landing requirements).
LLG 1713	Yes	No (Not eligible for an endorsement).
LLG 1785	Yes	No (Qualifies under landing requirements).
LLG 1916	Yes	No (Qualifies under landing requirements).
LLG 2112	Yes	Yes.
LLG 2783	Yes	No (Not eligible for an endorsement).
LLG 2892	Yes	No (Qualifies under landing requirements).
LLG 2958	Yes	No (Not eligible for an endorsement).
LLG 3616	Yes	No (Not eligible for an endorsement).
LLG 3617	Yes	No (Qualifies under landing requirements).
LLG 3676	Yes	No (Qualifies under landing requirements).
LLG 4823	Yes	No (Qualifies under landing requirements).
LLG 2081	No (Qualifies under landing requirements)	Yes.
LLG 3090	No (Not eligible for an endorsement)	Yes.

Table 2 indicates that under this proposed exemption, NMFS would issue 12 CG and three WG endorsements. An LLP license that receives a Pacific cod hook-and-line catcher/processor endorsement under this proposed exemption could only be assigned to a vessel participating in the Pacific cod offshore sector that is fishing in the regulatory area of the GOA for which the endorsement is received. Regulations at § 679.2 define the inshore and offshore sector for Pacific cod. Current regulations assign the offshore sector of the GOA Pacific cod fishery 10 percent of the TAC in the CG and WG. The remaining 90 percent of the TAC will be is assigned for vessels in the inshore sector. Vessels are required to participate in the offshore sector if they are equal to or greater than 125 feet LOA, or are used to process more than 126 mt of pollock and Pacific cod in the aggregate during any seven-day period. Vessels not meeting these criteria must select annually whether they will participate in either the inshore or the offshore Pacific cod fishery in the GOA. NMFS is aware that in December 2009, the Council recommended modifications to allocate Pacific cod among various gear types and vessel size classes and operational types. The modification would remove the distinct inshore and offshore sectors in the Central and Western GOA. This action is commonly known as the GOA Pacific cod sector split. Forthcoming proposed regulations that would implement the Council's changes to Pacific cod management under the GOA Pacific cod sector split would address any potential impact on Pacific cod endorsements issued under this proposed rule.

In this rule, NMFS would implement the Council's recommendation that LLP licenses receiving an endorsement under this provision "only be allowed to participate in the offshore fishery" by requiring that vessels fishing in a regulatory area for which they receive an endorsement under this exemption register and fish only in the offshore sector in that area. For example, under this proposed rule, license LLG 4823 (see Table 2 above) would receive a Pacific cod endorsement in the CG under the exemption, and it would also qualify to receive an endorsement under the landings requirements described under Table 1. Thus, under this rule, if LLG 4823 is assigned to a vessel fishing in the CG, that vessel could only participate in the offshore sector in the CG.

The proposed rule would retain the requirement that vessel owners elect annually on their Federal Fisheries Permit (FFP) application whether to participate in the inshore or the offshore sector of the GOA. Therefore, a vessel operator who is assigned an LLP license with a Pacific cod endorsement exemption could not participate in the inshore sector in one regulatory area and the offshore sector in another regulatory area in the GOA during the same calendar year. For example, if a vessel operator wished to participate in the CG and WG with a vessel assigned LLG 4823, the vessel operator could only participate in the offshore sector.

The Council recommended limiting LLP holders receiving a Pacific cod endorsement under this exemption to the offshore sector to ensure that LLP license holders benefitting from this

exemption could not use the Pacific cod endorsement to also expand effort in the inshore Pacific cod fishery. The proposed rule would modify regulations at § 679.7 to clarify that once an LLP holder elects to operate in either the inshore or the offshore sector in the GOA, any vessel to which that LLP license is assigned cannot participate in the sector not selected for the remainder of the calendar year. This clarification would implement the Council's recommendation to ensure LLP license holders could not alternate activities between the inshore and offshore sector, and potentially disadvantage other fishery participants who are only able to, or only choose to, annually participate in one sector.

Table 3 summarizes data presented in the EA/RIR/IRFA prepared for this action (see **ADDRESSES**) and describes the number of LLP licenses by each operational type, regulatory area, and within each MLOA category that would receive a Pacific cod endorsement relative to the number of currently endorsed LLP licenses based on the landings criteria described in Table 1.

TABLE 3—ESTIMATED NUMBER OF FIXED GEAR PACIFIC COD ENDORSEMENTS TO BE ISSUED

Regulatory area	Operational type	MLOA of LLP license	Current number of endorsements	Estimated number of qualifying endorsements
CG	Catcher vessel	< 60 feet	702	193
		≥ 60 feet	181	34
	Catcher/Processor	All	49	27
WG	Catcher vessel	< 60 feet	154	77
		≥ 60 feet	110	24
	Catcher/Processor	All	31	21

Determining Landings Assigned to an LLP License

Since 2002, NMFS has required that an LLP license designate a specific vessel on which it was being used. This requirement has provided NMFS the information necessary to assign landings to a specific LLP, and allows NMFS to verify the use of an LLP license on a specific vessel. When information about the use of an LLP license on a specific vessel is combined with vessel landings records, NMFS can determine how many landings may be assigned to a specific LLP license during the 2002 through December 8, 2008, proposed qualifying period. If an LLP license were not assigned a sufficient amount or number of landings in a specific regulatory area by vessel operation type and gear type for that MLOA, then under the proposed rule NMFS would not issue a Pacific cod endorsement for that LLP license, unless that LLP license were eligible for an exemption from landing requirements as previously described for specific hook-and-line catcher/processor endorsed LLP licenses.

If a vessel were designated on more than one LLP license, NMFS would assign the credit for any of the vessel's landings to all LLP licenses assigned to, or "stacked," on that vessel at that time. Therefore, NMFS could credit a single landing to more than one LLP license. This provision would ensure that when more than one LLP license with a specific combination of gear/area endorsements was assigned to a vessel that made a landing, all LLP licenses assigned to that vessel would be credited with the landing. Because NMFS' catch accounting system does not indicate how specific landings should be assigned to multiple LLP licenses assigned to a vessel at the time a landing was made, this provision would resolve any potential disputes that could arise about the assignment of specific landings.

Section 2.5.12 of the EA/RIR/IRFA prepared to support this action (see **ADDRESSES**) indicates that NMFS expects that crediting each of these stacked LLP licenses with landings would not substantially increase the number of LLP licenses that met the landings requirements under the Council's preferred alternative. In addition, apportioning a landing between two LLP licenses rather than crediting each license with the full amount of each landing would require that NMFS develop detailed rules governing that apportionment, which could require a decision making process that would be subject to administrative appeal, and unnecessarily complicate implementation. The administrative appeal process is described in greater detail below.

Thus, under this proposed rule, in order to receive a Pacific cod endorsement for either the CG or WG, a vessel with a valid LLP license would have to either demonstrate that it had sufficient cumulative landings of Pacific cod between fishing years 2002–2008, or that it landed a sufficient total amount of fish during that period, or that the LLP license holder qualifies for such an endorsement pursuant to the exception listed above.

Action 2: Exempt Certain Vessels Using Jig Gear From the Requirement To Carry an LLP License

The second action under this proposed rule would exempt vessels using jig gear in the GOA from the requirement to be assigned an LLP license, provided those vessels do not use more than five jigging machines, more than one line per machine, and more than 30 hooks on any one line. This exemption from the requirements of the LLP for jig gear vessels is intended to provide a limited opportunity for entry level vessel operators to participate in the Federal Pacific cod fishery without the obligations and costs that they may incur if a Pacific cod endorsement were required.

The proposed exemption is similar to an exemption that currently applies to jig gear vessels operating in the BSAI. Regulations at § 679.4 exempt vessels less than 60 ft LOA using a maximum of five jig machines, no more than one line per jig machine, and no more than 15 hooks per line, from the requirements of the LLP in the BSAI. The Council recommended that the exemption in the GOA be similar to those in the BSAI to allow vessel operators to operate in both the BSAI and GOA with jig gear. The proposed restrictions on jig gear are consistent with the gear allowed in the GOA State waters Pacific cod jig fisheries. State regulations allow the use of up to 150 hooks for vessels participating in the State GHL fishery. The proposed regulation would allow a maximum of 150 hooks as well (*i.e.,* up to 5 lines with 30 hooks each). The purpose of the

jig exemption is to ensure that there are opportunities for vessels to use jig gear in the GOA Pacific cod fisheries.

Section 2.5.7 of the EA/RIR/IRFA prepared for this action notes that the majority of vessels using jig gear during 2000 through 2007 are less than 58 feet LOA. Relatively few vessels actively participate in the jig fishery on an annual basis (an average of 18 in the CG and 11 in the WG). Pacific cod catch by jig gear vessels represents a small portion of the overall TAC. Few of the vessels using jig gear fish in Federal waters. Most vessels that use jig gear and hold LLP licenses participate exclusively in the parallel fishery or the State-managed GHL Pacific cod fisheries. The proposed action would not limit the size of vessels exempted from an LLP license requirement, provided the maximum number of jig machines and hooks per line are not exceeded. The Council did not deem a vessel length limit necessary after reviewing the size of vessels active in the Pacific cod fishery and the constraints imposed on vessels by the line and hook limits under this provision. This action would not be expected to increase harvest of other groundfish species assuming the recent fishing patterns of vessels using jig gear in the GOA continue. This recommendation is consistent with the Council's goals of providing continuing opportunities for entry-level fishermen using jig gear and minimizing the potential impact of new entrants on active participants in the GOA Pacific cod fishery.

Jig gear operators who meet the landing threshold described under Action 1 would receive a Pacific cod endorsement for jig gear that would allow a vessel using an LLP license with this endorsement to use more than five jigging machines, more than five lines, and more than 30 hooks per line.

Action 3: Modify the MLOA of Certain LLP Licenses

The third action under this proposed rule would modify the MLOA specified on certain LLP licenses that are eligible to receive a Pacific cod endorsement under two different scenarios. Overall, this proposed action would modify the MLOA specified on certain LLP licenses to allow holders of those licenses to continue to participate in the fixed gear Pacific cod fishery as they do currently without increasing the number of active participant in the Pacific cod fishery.

The first modification would apply if: (1) An LLP license has a specified MLOA greater than or equal to 60 feet; (2) that LLP license was consistently assigned to a single vessel under 60 feet LOA from January 1, 2002 through December 8, 2008; and (3) the vessel to which the LLP license was assigned met the landing thresholds applicable to LLP licenses with a specified MLOA under 60 feet. If these criteria were met, NMFS would issue a Pacific cod endorsement for the applicable gear type to the LLP license, but modify the MLOA of the LLP license to match the LOA of the vessel to which the LLP license was assigned. In no case could the MLOA specified on the LLP license be increased beyond 60 feet. This modification would ensure that vessel owners could continue to use the vessel and LLP licenses in the fisheries as they had during the January 1, 2002 through December 8, 2008, time period and the LLP licenses would receive a Pacific cod endorsement applicable to the length of the vessel to which the LLP license was assigned. This modification would reduce the overall MLOA specified on those LLP licenses that meet these criteria.

To determine the MLOA that would be specified on the LLP license, NMFS would use the LOA of the vessel to which the LLP license is assigned at the time of the effective date of this rule, if approved. NMFS maintains records of vessel LOA based on data reported by vessel owners. Regulations at § 679.4 require vessel owners to report accurate LOA in order to receive and hold an FFP. NMFS would use the reported FFP data to determine the LOA of a vessel. If the LLP holder disagreed with the LOA on file with NMFS and wished to provide data to NMFS to establish a different LOA for the vessel, NMFS would require that the LLP license holder provide a survey conducted by a naval architect or marine surveyor independent from the vessel owner or LLP license holder to verify the LOA of the vessel. NMFS would provide a vessel owner 90 days from the effective date of this rule to provide the survey to NMFS. The 90-day time period should provide the LLP license holder with sufficient time necessary to have a vessel surveyed and to provide that information to NMFS. NMFS would not assign a Pacific cod endorsement to an LLP license holder with a greater vessel LOA than that shown in NMFS' record unless a timely independent survey was submitted and received by NMFS. If no survey is provided within the 90-day time frame, NMFS would reissue the LLP license with the MLOA equal to the LOA of the vessel to which the LLP license was assigned based on the LOA on file with NMFS. No LLP license that would receive a Pacific cod endorsement under this provision could have an MLOA equal to or greater than 60 feet under any circumstance to ensure that the intent of the Council's recommendation is met. The procedure proposed here would provide an opportunity for an LLP license holder to amend NMFS' official record consistent with the appeals process described below in this preamble.

Section 2.5.3 of the EA/RIR/IRFA prepared for this action estimates that the MLOA specified on fewer than six LLP licenses would be adjusted by this exemption. A more precise estimate is not available given some uncertainty about the LOA of the vessels to which some of these LLP licenses were assigned during January 1, 2002, through December 8, 2008. Overall, this modification would be expected to have a limited effect on the total harvest of Pacific cod. This exemption would only apply if an LLP license had been continuously assigned to a vessel under 60 feet LOA during that period. The redesignation of the MLOA on an LLP license that qualifies under this provision would effectively prohibit the use of that LLP license on larger vessels that may have greater harvest capacity, but would allow smaller vessels that had been assigned that LLP license to continue to operate in the Pacific cod fishery.

The second modification of an LLP MLOA would apply if an LLP license (1) would be eligible to receive a pot catcher vessel Pacific cod endorsement, and (2) has a specified MLOA of less than 50 feet. If these criteria were met, NMFS would redesignate the MLOA of those LLP licenses to be 50 feet. This modification would ensure that a limited number of vessel owners who had recently purchased vessels that are longer than the MLOA of the LLP license that is eligible to receive the Pacific cod endorsement could continue to use those LLP licenses on their longer vessels. This recommendation is consistent with the Council's goals of providing continuing opportunities for recent fishery participants and minimizing the potential for active participants to expand effort in the GOA Pacific cod fishery.

Section 2.6.11 of the analysis prepared for this action notes that the Council supported this provision because a number of vessel operators using pot gear had recently purchased vessels not greater than 50 feet in LOA, but larger than the MLOA specified on their LLP licenses that would be eligible to receive a Pacific cod endorsement. These vessel owners also hold LLP licenses with the appropriate MLOA; however, these LLP licenses would not meet the minimum landing

requirements to qualify for a Pacific cod endorsement under this proposed action. These vessel operators testified (and available data on LLP licenses shows) that the number of LLP licenses likely to receive a Pacific cod endorsement that could be used on these vessels was limited and costly relative to the harvest capacity of their 50-foot, or shorter, LOA vessels. Very few LLP licenses with an MLOA of 50 feet would receive a Pacific cod endorsement for pot gear under the Council's proposed action. The Council recommended increasing the MLOA of a limited number of LLP licenses to 50 feet to accommodate these vessel owners. This modification would reduce the potential costs for these smaller vessel operators, but would not be expected to increase the overall harvest capacity of the fleet measurably. The analysis estimates that this provision would modify the MLOA of four LLP licenses. The analysis indicated that these vessels used only pot gear during the qualifying period; therefore, this proposed action would modify LLP licenses endorsed for pot gear.

Action 4: Allow Specific Community Entities To Request and Receive LLP Licenses With a Pacific Cod Endorsement

The fourth action under this proposed rule would allow entities representing specific communities in the WG and CG to request a limited number of non-transferrable Pacific cod endorsed LLP licenses. Under this rule, NMFS would issue licenses that are endorsed for hook-and-line or pot gear with an MLOA of 60 feet. Once the community entity received the LLP license, the community entity could assign that LLP license for use on a vessel designated by the entity. Prior to receiving the LLP license, the community entity eligible to receive the LLP license would need to submit a detailed plan describing how it would assign the LLP license to a specific vessel.

Previously, the Council recommended, and the Secretary approved, Amendment 66 to the GOA FMP, which implemented management measures to provide harvest opportunities to specific communities in the GOA (April 30, 2004, 69 FR 23681). Under Amendment 66, the Council defined a specific suite of smaller GOA communities that have historically participated in GOA fisheries but may lack some of the infrastructure and population base that could facilitate participation by residents of those communities in GOA fisheries, as compared to larger communities. Under Amendment 66, a community quota entity (CQE) was authorized to purchase halibut and sablefish quota share (QS) on behalf of the community it represents, and assign the resulting annual individual fishing quota (IFQ) to specific members of the community that meet minimum residency standards and other requirements. The CQE is intended to serve the interests of the community as a whole by providing access to fishery resources for residents of the community.

Communities eligible under Amendment 66: (1) Have a population of less than 1,500 and at least 20 persons based on the 2000 United States Census; (2) are located on the GOA coast of the North Pacific Ocean; (3) have direct saltwater access; (4) lack direct road access to communities with a population greater than 1,500 persons; (5) have historic participation in the halibut and sablefish fisheries; and (6) are specifically listed in Table 21 to part 679. Seventeen communities that meet these criteria are located in the CG, and four communities are located in the WG.

For this proposed action, the Council reviewed a range of potential options for defining coastal communities in the GOA based on their location on the GOA coast of the North Pacific Ocean, and past harvest patterns by community residents in the GOA Pacific cod fishery. Ultimately, the Council chose to rely on the six criteria listed above under Amendment 66 to determine coastal communities that may benefit from the ability to retain or expand participation opportunities in the GOA Pacific cod fishery for their residents. The Council relied on the criteria established under Amendment 66 to define communities eligible to receive an LLP license with a Pacific cod endorsements because these criteria incorporate communities that are active in GOA fisheries generally, do not include larger communities that do not have the same reliance on GOA fishery resources relative to their population, and would provide opportunities communities that lack access to financial opportunities that may exist in larger communities. NMFS would provide the CQEs that represent these communities the opportunity to enhance their access to fishery resources by providing CQEs with a limited number of Pacific cod endorsed fixed-gear LLP licenses.

The Council recommended that if an eligible community in the CG or WG forms a CQE under existing regulations at § 679.41(l)(3), that CQE could apply to receive a specified number of Pacific cod endorsed fixed-gear LLP licenses. If a CQE submitted a complete application for LLP licenses, NMFS would issue the CQE new LLP licenses with the applicable gear and area endorsements. CQEs that have already formed and been approved by NMFS would be also eligible to apply to receive LLP licenses.

The Council clarified that a CQE could request a Pacific cod endorsed LLP license only for the area in which that community is located. CQE communities in the WG could receive only WG endorsed LLP licenses, and CQE communities in the CG could receive only CG endorsed LLP licenses. The Council made this recommendation to provide community residents the opportunity to access Pacific cod resources adjacent to their community, and to prevent community residents from using LLP licenses granted through this provision to expand fishing efforts into regions outside the community. The Council clarified that the goal of this provision is to ensure access to Pacific cod resources near each community and not to encourage fishing operations that would expand into other regions.

In order to receive LLP licenses, the CQE would need to meet several requirements. Prior to requesting LLP licenses, the CQE must provide NMFS with a plan for soliciting and determining recipients of the LLP licenses issued to the CQE. The Council specified that this plan should contain requirements similar to the plan requirements that apply to a CQE when distributing annual IFQ from halibut or sablefish QS held by the CQE. Regulations at § 679.41(l)(3) contain the requirements that CQEs must meet to form and solicit potential recipients of halibut and sablefish IFQ. NMFS proposes to model regulations for this action on the existing regulations at § 679.41(l)(3). Specifically, CQEs would need to provide NMFS with: (1) A statement describing the procedures that will be used to determine the distribution of LLP licenses to residents of the community represented by that CQE; (2) procedures used to solicit requests from residents to be assigned an LLP license; and (3) criteria used to determine the distribution of the use of LLP licenses among qualified community residents and the relative weighting of those criteria. These requirements would inform the Council and NMFS about the process used by CQEs to provide fishery opportunities to its residents without requiring a detailed suite of regulatory measures to define how such fishing opportunities would be assigned throughout all of the geographically and culturally diverse communities.

Second, once the CQE has submitted the application to NMFS and the CQE has selected a potential recipient to use the LLP license, NMFS would require that the CQE provide a letter of authorization to the vessel operator listing the specific person(s) and the specific vessel eligible to use an LLP license held by the CQE during a calendar year. An LLP license issued to a CQE could not designate more than one vessel per calendar year. The CQE could amend the authorization letter to add additional persons authorized to use the LLP license on a vessel. The person authorized to use the LLP license issued to the CQE would not be required to be the vessel operator. For example, a crew member could be authorized to use the CQE's LLP license. The person designated to use the LLP license issued to the CQE would be required to be onboard the vessel while the vessel is used to directed fish for Pacific cod under the authority of that license. NMFS would require that a copy of the authorization letter and any amendments to the authorization letter be provided to NMFS, and a copy of that authorization letter and any amendments would need to be maintained onboard the vessel assigned the CQE's LLP license. Likewise, NMFS would require that the authorization letter be provided on or before the date that the LLP license is used on a vessel during a calendar year. NMFS would also require that any amendments to the authorization to designate new authorized persons be provided to NMFS prior to those persons using the CQE's Pacific cod LLP.

As part of this authorization letter, NMFS would require that the CQE attest that the persons authorized to use the LLP license meet residency requirements similar to those required for recipients of IFQ derived from halibut and sablefish QS held by a CQE. Specifically, the CQE would need to attest that the authorized person (1) Is a citizen of the United States; and (2) has maintained a domicile in a CQE community in the CG or WG eligible to receive an LLP license endorsed for Pacific cod for the 12 consecutive months immediately preceding the time when the assertion of residence is made; and (3) is not claiming residency in another community, state, territory, or country, with an exception made for residents of the Village of Seldovia. Consistent with the definition of a resident under Amendment 66, residents of the Village of Seldovia shall be considered to be eligible community residents of the City of Seldovia for the purposes of eligibility to serve as an authorized vessel operator. The rationale for the residency exemption that applies to the City of Seldovia is described in detail in the preamble to the final rule for Amendment 66 and is not repeated here (April 30, 2004, 69 FR 23681). Maintaining this exemption for the residents of the Village of Seldovia is consistent with the Council's goal of providing access to community residents consistent with Amendment 66.

The Council recommended these requirements to ensure that residents of communities receive the benefits of the LLP licenses issued to CQEs. The Council recommended that only one vessel be allowed to use a specific LLP license issued to a CQE per year to reduce the potential that an LLP license could be used on multiple vessels. Allowing multiple vessels to use an LLP license in a given year could increase competition for Pacific cod resources in waters surrounding these communities. The Council did not recommend allowing a CQE to designate more than one vessel in cases of vessel loss. This restriction would not be expected to prevent the ability of community residents to access Pacific cod resources through a CQE LLP license because a minimum of two LLP licenses can be issued to any one CQE. Because a CQE can designate a new vessel each year prior to the start of the fishing season, the effect of restricting the use of an LLP to only one vessel per year would not be expected to be a long-term constraint on fishing operations.

The Council recommended that the CQE provide an authorization letter assigning a specific vessel and designating the person(s) authorized use of the LLP license. Providing the authorization letter to NMFS and requiring that a copy of that letter be maintained onboard the vessel would help to ensure that only those persons and vessels that have been vetted through the CQE are able to use the LLP license. The requirement that the person(s) authorized to use the CQE's LLP license be onboard the vessel when directed fishing for Pacific cod under the authority of that license meets the Council's intent to ensure that a resident of a CQE community be actively engaged in fishing when that LLP license is being used. In the absence of this provision, the CQE could authorize a person who is a member of a CQE community to "use" the LLP license without being actively engaged in fishing for Pacific cod.

The residency requirements for the person using a CQE license would ensure that residents of a specific community actively participate in the Pacific cod fishery consistent with the overall goal the Council established for CQE LLP licenses described earlier. This authorization letter would require that the CQE attest to individuals' residency, but would not require individuals to submit proof of residency to NMFS in order to use the LLP license issued to the CQE. This approach would reduce potential administrative burdens on NMFS that could be required to determine the residency of a specific person. In many cases, particularly in smaller communities, the representatives of CQEs are likely to have specific local knowledge that can be used to assess a person's claim of residency.

The specific requirement that a person using an LLP license issued to a CQE must be a U.S. Citizen with residency in a specific community mirrors requirements currently established under Amendment 66 to allow a person to receive IFQ from QS held by a CQE. One requirement necessary for a person to receive IFQ from a CQE, that a person be considered an "IFQ crew member," would not apply to the operator of a vessel using an LLP license issued to a CQE. The definition of a halibut and sablefish IFQ crew member is not directly applicable to a person operating a vessel in the Pacific cod fishery.

The Council identified the specific communities that would be eligible to receive LLP licenses if they formed a CQE. Those communities are listed in this proposed rule in Table 50 to part 679. The eligible communities are located in the CG and WG, with one exception for the City of Yakutat. Although Yakutat is located in the Eastern Gulf of Alaska, it is located close to the eastern boundary of the CG. Historically, fishing vessels operating out of Yakutat have participated in CG fisheries. For these reasons, the Council recommended that Yakutat be included in this proposed provision.

Several limitations apply to any LLP license that a CQE would receive. These include: (1) All LLP licenses issued would be non-transferable; (2) a limited number of LLP licenses could be issued to each CQE; (3) the LLP licenses would have an MLOA of 60 feet; and (4) the LLP licenses would have specific gear endorsements.

The Council recommended, and the proposed rule provides, that LLP licenses issued to CQEs would be non-transferrable to reduce the risk that CQEs would receive LLP licenses and transfer those LLP licenses to persons who may not have vessels, crew, or delivery patterns associated with the community, thereby frustrating the

primary goal of these LLP licenses to provide additional opportunities for community residents. This is consistent with the CQE provisions in the halibut and sablefish IFQ Program designed to promote a long-term asset for the community.

The Council recommended, and this action proposes, a limit on the specific number of LLP licenses that each eligible CQE could request on behalf of that community. This limit would reduce the potential adverse effects of an unlimited number of Pacific cod endorsed LLP licenses on other LLP license holders. The number of LLP licenses that each CQE could request on behalf of a community is based on information (incorporated in Section 2.5.14 of the analysis prepared for this action) indicating the number of LLP licenses held by residents of each eligible community and the estimated number of LLP licenses that would be extinguished under the other provisions of the proposed action.

The Council's April 2009 motion would have allowed a CQE to request a maximum number of LLP licenses on behalf of a community. The number of LLP licenses that may be requested is based upon information regarding the number of licenses held by community residents that the analysis estimated did not qualify for a Pacific cod endorsement under a one landing threshold from 2002 through December 8, 2008, or two LLP licenses, whichever is greater. However, the Council recommended assigning Pacific cod endorsements to non-CQE LLP licenses based on a minimum tonnage requirement, not a minimum number of landings. After the Council took final action in April 2009, CQE representatives noted that it was likely that residents of CQE communities would qualify to receive fewer non-CQE Pacific cod endorsements on their LLP licenses under the minimum tonnage rather than the minimum landings requirement. The Council requested additional information on the number of LLP licenses held by community residents that were estimated not to qualify for a Pacific cod endorsement under the minimum landing threshold from 2002 through December 8, 2008. This additional information was presented to the Council in December 2009. These data show that 11 fewer CQE community residents would receive Pacific cod endorsements in the CG and seven fewer in the WG under the minimum tonnage threshold than under the minimum landing threshold.

The Council's intent of proposed Action 4 was to provide CQE communities with the opportunity to request either: (1) The estimated number of licenses held by residents that did not qualify for a Pacific cod endorsement; or (2) a minimum of two licenses. If the minimum tonnage threshold had been used in April 2009, to determine how many licenses each CQE may request, more licenses (in the aggregate) would have been made available to CQEs. Therefore, in December 2009, the Council amended its April 2009 action to clarify that CQEs could request, in the aggregate, an additional eleven (11) CG LLP licenses and seven (7) WG LLP licenses with Pacific cod endorsements. This amendment was intended to ensure that the number of LLP licenses made available to CQEs better matched the Council's intent for this action.

The Council clearly indicated that it would establish the maximum number of LLP licenses that each CQE community could request and set the number of licenses in regulation. The proposed number of LLP licenses that each CQE community could request is based on the Council's December 2009, action and that number is listed in the proposed rule at Table 50 to part 679. The Council recommended that NMFS establish a specific list of eligible communities and the maximum number of LLP licenses that could be issued for a community in regulation to ensure that each community would know exactly how many LLP licenses it would be eligible to receive, and could plan its harvesting efforts accordingly.

The Council recommended that in those CQE communities where no residents were identified as potential recipients of Pacific cod endorsements, the CQE could request a maximum of two LLP licenses. The Council recommended this limit to provide residents of these communities an opportunity to access the Pacific cod fishery. In many cases, the communities that would be eligible to request up to two Pacific cod endorsed LLP licenses have relatively small populations. Granting two LLP licenses would provide opportunities for more than one vessel in a community, but would limit the ability for additional vessels to increase their effort in Pacific cod fisheries substantially beyond the number of vessels in the communities that have historically participated in the Pacific cod fishery.

The net effect of the Council's action does not seem to increase the total number of LLP licenses that could be used to fish in the Pacific cod fishery relative to the number of LLP licenses that could be used to fish Pacific cod if this proposed action were not approved by the Secretary. Based on information in Section 2.5.14 of the EA/RIR/IRFA prepared for this proposed action, residents of the CQE communities eligible for this provision held 74 CG endorsed fixed-gear LLP licenses, and 54 WG endorsed LLP licenses as of December 2009. Under this proposed action, only 9 CG Pacific cod endorsements would be granted, and only 29 WG Pacific cod endorsements would be granted to CQE residents who met the minimum landing requirements during the 2002 through December 8, 2008, qualifying period. If all eligible communities formed a CQE and applied to receive a Pacific cod endorsed LLP license, a maximum of 57 CG and 32 WG Pacific cod endorsements could be issued to residents of the CQE communities. These numbers assume that the residency of potential Pacific cod endorsement recipients does not change during the period between the Council's recommendation and the publication of the proposed rule and the effective date of the final rule.

NMFS proposes a modification to regulations at § 679.7(i)(1)(i), which limit the maximum number of LLP licenses that a person may hold, to fully implement the Council's intent to allow CQEs to provide harvest opportunities for local residents. Regulations at § 679.7(i)(1)(i) currently limit a person, which includes CQEs, from holding more than 10 groundfish LLP licenses. The proposed new Table 50 to part 679 notes that the CQE representing the City of Sand Point could hold up to 14 LLP licenses. This proposed rule would amend regulations at § 679.7(i) to prohibit the CQE representing the City of Sand Point from holding more than 14 groundfish LLP licenses, rather than prohibiting the CQE representing Sand Point from holding more than 10 groundfish LLP licenses. This proposed change would not affect any other person, but would allow the CQE representing Sand Point to hold the maximum number of LLP licenses that could be received under this proposed action consistent with Council intent.

The Council recommended that the LLP licenses that would be issued have a specified MLOA of 60 feet. This MLOA would limit the potential that CQE communities could assign LLP licenses to large vessels with potentially greater harvest capacity than the vessels traditionally used by residents of these communities. Typically, many of the vessels used to fish Pacific cod with fixed-gear in the CQE communities are "combination vessels" that were originally designed to participate in the State salmon seine fisheries but now participate in salmon, groundfish, and the halibut IFQ fisheries. Because many of these combination vessels are subject

to length limits established by the State for participation in the salmon seine fishery, most combination vessels are no greater than 58 feet LOA. Based on a review of length data of vessels in CQE communities provided in Section 2.5.14 of the EA/RIR/IRFA prepared for this action, NMFS anticipates that most of the vessels likely to be used by CQE community residents would be less than 58 feet in length, and none would be expected to exceed 60 feet in length. Consistent with the information in the analysis, the Council recommended, and NMFS proposes, limiting the MLOA on LLP licenses issued to CQEs to 60 feet LOA to accommodate existing fishing patterns and vessel usage in the eligible communities.

The Council recommended that the gear endorsements on LLP licenses that could be requested by a CQE generally represent the overall harvest patterns by vessels using hook-and-line and pot gear within each regulatory area. Vessels using jig gear would be exempt from the LLP license requirement and, therefore, harvest patterns by vessels using that gear type would not be considered when assigning LLP licenses to CQEs. Section 2.5.3 of the EA/RIR/IRFA prepared for this proposed action indicates that over 90 percent of the LLP licenses with an MLOA of less than 60 feet would receive a fixed-gear Pacific cod endorsement in the WG for pot gear. Very few LLP licenses would qualify for a hook-and-line or a jig endorsement with a less than 60-foot MLOA because those gear types have not historically been used in the WG. By contrast, roughly half of the LLP licenses with an MLOA of less than 60 feet in the CG would receive a fixed gear endorsement for pot gear, and the other half would be endorsed for hook-and-line gear. Therefore, NMFS would issue LLP licenses endorsed only for pot gear to CQEs representing communities in the WG. CQEs representing communities in the CG, including Yakutat, would have the option of selecting what proportion of their LLP licenses would have a pot endorsement or a hook-and-line endorsement, provided the CQE notified NMFS within six months of the effective date of a final rule, if implemented, of their choice. Selection of gear type would be a one-time permanent choice. If a CQE did not notify NMFS within this time frame, then NMFS would issue any LLP licenses that are requested by a CQE so that half the LLP licenses issued to the CQE would be endorsed for pot gear and half would be endorsed for hook-and-line gear. In cases where the total number of groundfish licenses issued on behalf of a community listed in Table 50 to part 679 is not even, NMFS will issue one more groundfish license with a pot gear Pacific cod endorsement than the number of groundfish licenses with a hook-and-line gear Pacific cod endorsement. This process for issuing LLP licenses would provide CQEs the opportunity to select the gear types that are appropriate for use by community residents at the time of implementation, while preserving the overall goal of maintaining the current harvest patterns within the CG.

The Council recommended, and NMFS proposes, that CQEs submit annual reports consistent with the annual report requirements established under Amendment 66. CQE annual reports would be required to be submitted to NMFS and the governing body of the community that the CQE represents. These annual reports would serve as a means of tracking the progress of the CQEs that have received LLP licenses under this proposed rule and to assess whether the issuance of LLP licenses was meeting the overall goal of providing its residents access to the Pacific cod resource. The Council requested that the CQE provide information in the annual reports describing the use of LLP licenses during a calendar year. The annual report would need to include: (1) The number of community residents requesting an LLP license from the CQE; (2) a description of the distribution of LLP licenses among community residents; (3) vessels assigned to use the LLP licenses; (4) the number and residency of crew employed on a vessel using the LLP license; and (5) the amount of payments made to CQEs for use of the LLP licenses, if any. Consistent with the timeline required for submission of the CQE annual report under Amendment 66, these annual reports would be due by January 31 for the prior fishing year for each community represented by the CQE for which those LLP licenses were granted.

NMFS would not establish an appeal process for CQEs to receive LLP licenses. The proposed action would allow CQEs to request LLP licenses provided the specific requirements detailed here were met. If those conditions were not met, NMFS would not issue LLP licenses to the CQEs. Because NMFS is not proposing to remove or otherwise restrict existing harvest opportunities available to CQEs, no appeal process is required. A potential CQE does have an opportunity to challenge and appeal the decision to certify its designation for a specific community. That provision is described in regulation at § 679.41(l)(3).

Process for Assigning New Pacific Cod Endorsements

NMFS would create an official record with all relevant information necessary to assign landings to specific LLP licenses. Prior to modifying any LLP licenses, NMFS would notify all fixed gear LLP license holders of the status of their LLP license endorsements (*i.e.,* the endorsements for specific fixed gear, operational types, and regulatory areas). Should an LLP license holder disagree with NMFS' official record, NMFS would provide an opportunity for a person to submit information to rebut the presumptions made by NMFS.

The official record created by NMFS would contain vessel landings data, and the LLP licenses to which those landings would be attributed. Evidence of the number and amount of landing in the Pacific cod fishery would be based only on legally submitted NMFS weekly production reports for catcher/processors and State fish tickets for catcher vessels. Historically, NMFS has only used these two data sources to determine the specific amount and location of landings and NMFS proposes to continue to do so under this action. In order to ensure that landings in the directed Pacific cod fishery are properly attributed to an LLP license, NMFS would assign any delivery of Pacific cod up to seven days after the closure of the Pacific cod season to an LLP license. The seven-day period would reasonably accommodate any final deliveries, and is consistent with the approach NMFS has used in other management programs to assign catch to an LLP license (*e.g.,* CG Rockfish Program). The official record also would include the records of the specific LLP licenses assigned to vessels and other relevant information necessary to attribute landings to specific LLP licenses. NMFS would presume the official record is correct, and a person wishing to challenge the presumptions in the official record would bear the burden of proof through an evidentiary and appeals process.

If this proposed rule is approved and implemented, NMFS would mail a notification to each fixed-gear LLP license holder based on the address on record at the time the notification is sent about the status of any endorsements for that LLP license. NMFS would provide information concerning the proposed effects of any changes to any LLP license to the LLP license holder, and would provide a single 30-day evidentiary period from the date that notification is sent for an LLP holder to submit any information or evidence to demonstrate that the information

contained in the official record is inconsistent with his or her records.

Under this proposed rule, an LLP license holder who submits claims that are inconsistent with information in the official record would have the burden of proving that the submitted claims are correct. NMFS would not accept claims that are inconsistent with the official record, unless they are supported by clear written documentation. NMFS would evaluate additional information or evidence to support an LLP license holder's inconsistent claims submitted prior to or within the 30-day evidentiary period. If NMFS determines that the additional information or evidence proves that the LLP license holder's claims are correct, NMFS would act in accordance with that information or evidence. However, if, after the 30-day evidentiary period, NMFS determines that the additional information or evidence does not prove that the LLP license holder's claims were correct, NMFS would deny the claim. NMFS would notify the applicant that the additional information or evidence did not meet the burden of proof to overcome the official record through an initial administrative determination (IAD).

NMFS' IAD would indicate the deficiencies and discrepancies in the information or the evidence submitted in support of the claim. NMFS' IAD would indicate which claims could not be approved based on the available information or evidence, and provide information on how an applicant could appeal an IAD. The appeals process is described under § 679.43. A person who appeals an IAD would be eligible to participate in the GOA Pacific cod fishery using the disputed LLP license with the claimed endorsements listed on the LLP license until final action by NMFS on the appeal. NMFS would reissue as interim LLP licenses any LLP licenses pending final action by NMFS. Once final action has been taken, NMFS would reissue the LLP license as a final non-interim LLP license. NMFS would prohibit the transfer of an interim LLP license until the appeal is resolved. Transfer restrictions would be imposed on interim LLP licenses to ensure that a person would not receive an LLP license by transfer and have the endorsement modified through an appeal process that was initiated and conducted by the previous LLP license holder—a process that a transferee could not control and which could substantially affect the value and utility of that LLP license.

If a person does not dispute the notification of changes in their LLP license endorsements, or upon the resolution of any inconsistent claims, a revised LLP license with the appropriate endorsements would be reissued to the LLP license holder. In cases where all endorsements on a LLP license with only a fixed gear endorsement are extinguished, NMFS would not reissue the LLP license because it would no longer be valid for use with fixed-gear in any management area.

Classification

The Assistant Administrator for Fisheries, NOAA, has determined that this proposed rule is consistent with Amendment 86, the Magnuson-Stevens Fishery Conservation and Management Act (MSA), and other applicable laws, subject to further consideration after public comment.

Executive Order 12866

This proposed rule has been determined to be not significant for purposes of Executive Order 12866.

Initial Regulatory Flexibility Analysis (IRFA)

An IRFA was prepared, as required by section 603 of the Regulatory Flexibility Act (RFA). Copies of the IRFA prepared for this proposed rule are available from NMFS (see **ADDRESSES**). The IRFA describes the economic impact this proposed rule, if adopted, would have on small entities. A description of the action, the reasons why it is being considered, and a statement of the objectives of, and the legal basis for, this action are contained in the **SUMMARY** section of the preamble and are not repeated here. The IRFA for this proposed action describes the reasons why this action is being proposed; the objectives and legal basis for the proposed rule; the type and estimated number of small entities to which the proposed rule would apply; any projected reporting, recordkeeping, or other compliance requirements of the proposed rule; any overlapping, duplicative, or conflicting Federal rules; and any significant alternatives to the proposed rule that accomplish the stated objectives of the MSA and any other applicable statutes, and that would minimize any significant adverse economic impact of the proposed rule on small entities. A summary of that analysis follows.

Rationale, Objectives, and Legal Basis of the Proposed Rule

The IRFA describes in detail the reasons why this action is being proposed, describes the objectives and legal basis for the proposed rule, and discusses both small and other regulated entities to adequately characterize the fishery participants. The MSA is the legal basis for the proposed rule. The objectives of the proposed rule are to limit the number of potential participants in Federal fixed-gear Pacific cod fisheries in the GOA by assigning and requiring Pacific cod endorsements on LLP licenses, and to provide additional fixed gear licenses that may be used on behalf of specific GOA communities. NMFS expects the proposed action will reduce uncertainty for active participants and provide additional harvest opportunities for residents of specific communities in the Western and Central GOA and the community of Yakutat whose residents have historically participated in Central GOA fisheries.

Number of Small Entities to Which the Proposed Rule Would Apply

The directly regulated entities under this proposed rule are holders of LLP licenses endorsed for fixed-gear activity who conducted directed fishing for Pacific cod in the GOA. For purposes of an IRFA, the Small Business Administration (SBA) has established that a business involved in fish harvesting is a small business if it is independently owned and operated, not dominant in its field of operation (including its affiliates), and if it has combined annual gross receipts not in excess of $4.0 million for all its affiliated operations worldwide. A seafood processor is a small business if it is independently owned and operated, not dominant in its field of operation, and employs 500 or fewer persons on a full-time, part-time, temporary, or other basis, at all its affiliated operations worldwide. Because the SBA does not have a size criterion for businesses that are involved in both the harvesting and processing of seafood products, NMFS has in the past applied, and continues to apply, SBA's fish harvesting criterion for these businesses because catcher/processors are first and foremost fish harvesting businesses. Therefore, a business involved in both the harvesting and processing of seafood products is a small business if it meets the $4.0 million criterion for fish harvesting operations. NMFS is reviewing its small entity size classification for all catcher/processors in the United States. However, until new guidance is adopted, NMFS will continue to use the annual receipts standard for catcher/processors. Even if additional catcher/processors would have been identified as small entities under a revised small entity size classification, NMFS would have analyzed the effect on small entities using the same methods that were used in the IRFA prepared for the

proposed rule. NMFS considered the effects of the proposed rule and attempted to reduce costs to all directly regulated entities regardless of the number of small entities.

The IRFA estimates that a maximum of 956 entities hold LLP licenses with fixed-gear endorsements designated for catcher vessel or catcher/processor operations; of these, an estimated 908 small entities would be directly regulated by this action. The IRFA notes that estimates of the number of small entities directly regulated by this proposed action are complicated by limited LLP license holder ownership information, and are based on available records of employment and information on participation in other fisheries. The estimate of the number of small entities is conservative. Other supporting businesses may also be indirectly affected by this action if it leads to fewer vessels participating in the fishery. These impacts are analyzed in the RIR prepared for this action (see **ADDRESSES**).

Impacts on Directly Regulated Small Entities

The purpose of the proposed action is to prevent future economic dislocation to fixed gear LLP license holders who have demonstrated consistent and recent participation in the fixed gear Pacific cod fisheries, and to provide additional harvest opportunities for residents of specific communities located adjacent to the Western and Central GOA, including the West Yakutat District. The overall impact to small entities is expected to be positive. Active fishery participants would face a reduced risk that the fishing effort would increase from currently inactive participants. Impacts from the proposed rule would accrue differentially (i.e., some entities could be negatively affected and others positively affected). As an example, active participants in the Pacific cod fishery would be expected to face less potential uncertainty about future fishery effort. The potential effects would vary depending on the gear type, regulatory area, and operational type assigned to the LLP license holder. Residents of communities eligible to receive a Pacific cod endorsed LLP license would have additional access to Pacific cod resources The Council considered an extensive range of alternatives and options as it designed and evaluated the potential for changes to groundfish management in the GOA including the "no action"alternative.

Two alternative approaches for the management of Pacific cod fishing by non-trawl LLP licenses in the CG and WG are presented in the EA/RIR/IRFA: Alternative 1—Status Quo/No Action; Alternative 2—Add a Pacific cod endorsement on the CG and WG GOA LLP licenses if minimum landing requirements are met. Alternative 2 would include a provision to issue new Pacific cod endorsed fixed gear LLP licenses to non-profit CQEs, representing specific communities in the CG and WG. These two alternatives examined ranges of options for a varying range of landing criteria and mechanisms for assigning Pacific cod endorsements. These alternative landing criteria and mechanisms and the options examined in the context of these alternatives constitute the suite of "significant alternatives" for the proposed action for the purposes of the RFA. During the development of this proposed action, the Council considered and rejected alternatives that would have allocated quota to specific fishery participants, or allocated a portion of the TAC to specific fishery sectors and gear types. These alternatives were considered to be overly broad to address the goal of limiting the potential entry of latent effort into the Pacific cod directed fishery.

Compared with the status quo, the proposed action selected by the Council would minimize adverse economic impacts on the directly regulated small entities. The alternatives under consideration in this proposed action would be expected to provide greater economic stability for fixed-gear LLP license holders with recent participation in the CG and WG Pacific cod fisheries. The alternatives would reduce the potential for substantial increases in fishing effort from latent LLP license holders, and would provide additional harvesting opportunities for CQEs who hold fixed-gear LLP licenses. In no case are these combined impacts expected to be substantial. Alternative 2 would not assign Pacific cod fishery endorsements to fixed-gear LLP licenses that have had little or no participation in Pacific cod fisheries in the CG and WG since 2002. Therefore, the effect of this action on those directly regulated entities is expected to be minimal. The effects would be minimal because the holders of latent LLP licenses would not be expected to rely on the Pacific cod resource or have substantial revenue given the lack of consistent participation in the fishery over a broad range of years. Furthermore, the addition of new Pacific cod endorsed fixed-gear licenses and the removal of LLP requirements for most vessels using jig gear may provide additional harvest opportunities for some catcher vessels in Federal waters. Many vessels currently active in State waters are catching fish assigned to the Federal TAC under the parallel fishery. It is not clear that these new Pacific cod endorsed fixed-gear licenses would substantially increase fishing effort. Although none of the alternatives are expected to have any significant economic or socioeconomic impacts, the preferred Alternative 2 minimizes the potential negative impacts, such as less control over potential fishing effort in the GOA Pacific cod fishery and greater risk that the fishery could be subject to overharvest that could arise under Alternative 1, the status quo alternative.

Projected Reporting, Recordkeeping and Other Compliance Requirements

The proposed rule would require additional reporting, recordkeeping, and other compliance requirements. Specifically, CQEs would need to submit an application to receive fixed-gear LLP licenses endorsed for Pacific cod, the selection of fixed gear type by CQEs in the CG, a description of the methods used to assign any fixed gear LLP licenses received, a letter of authorization for persons using LLP licenses assigned to a CQE, and an annual report detailing the distribution and use of LLP licenses. In addition, persons who qualify to receive a fixed-gear endorsement for an LLP license that was used on a vessel that was less than 60 feet in LOA under specific conditions would be required to submit a vessel survey prior to receiving an endorsement on that LLP license if they disagree with existing LOA data held by NMFS. Existing recordkeeping and reporting requirements for registering vessels in the inshore or offshore sector, and the LLP appeals process would not be modified.

Duplicate, Overlapping, or Conflicting Federal Rules

No Federal rules that might duplicate, overlap, or conflict with this proposed action have been identified.

Collection-of-Information

This proposed rule contains collection-of-information requirements subject to the Paperwork Reduction Act (PRA) and which have been approved by the Office of Management and Budget (OMB) under Control Number 0648–0334. Public reporting burden is estimated to average four hours for an appeal of an initial administrative determination per response, including the time for reviewing instructions, searching existing data sources, gathering and maintaining the data needed, and completing and reviewing

the collection of information. The following requirements have been submitted to OMB for approval: 20 hours for a CQE to apply to receive an LLP license and select the applicable gear type of that license if that CQE is operating in the CG; 40 hours for the CQE annual report; 1 hour to submit letter of authorization for a vessel and vessel operator from a CQE; and 1 hour to submit a vessel length survey for LLP license holders who qualify for a Pacific cod endorsement for vessels less than 60 feet in LOA under specific conditions.

NMFS seeks public comment regarding whether this proposed collection-of-information is necessary for the proper performance of the functions of the agency, including whether the information shall have practical utility; the accuracy of the burden estimate; ways to enhance the quality, utility, and clarity of the information to be collected; and ways to minimize the burden of the collection of information, including through the use of automated collection techniques or other forms of information technology. Send comments regarding this burden estimate, or any other aspect of this data collection, including suggestions for reducing the burden, to NMFS (see **ADDRESSES**) and by e-mail to *David_Rostker@omb.eop.gov,* or fax to 202–395–7285.

Notwithstanding any other provision of the law, no person is required to respond to, and no person shall be subject to a penalty for failure to comply with, a collection of information subject to the requirements of the PRA, unless that collection of information displays a currently valid OMB Control Number.

List of Subjects in 50 CFR Part 679

Alaska, Fisheries, Reporting and recordkeeping requirements.

Dated: July 19, 2010.

Samuel D. Rauch III,

Deputy Assistant Administrator for Regulatory Programs, National Marine Fisheries Service.

For the reasons set out in the preamble, 50 CFR part 679 is proposed to be amended as follows:

PART 679—FISHERIES OF THE EXCLUSIVE ECONOMIC ZONE OFF ALASKA

1. The authority citation for 50 CFR part 679 continues to read as follows:

Authority: 16 U.S.C. 773 *et seq.;* 1540; 1801 *et seq.;* 3631 *et seq.;* Pub. L. 108–447

2. In § 679.4,

a. Redesignate paragraphs (k)(2)(iii) and (k)(2)(iv) as paragraphs (k)(2)(iv) and (k)(2)(v); and paragraphs (k)(10) through (k)(12) as paragraphs (k)(11) through (k)(13);

b. Revise paragraph (k)(3)(i), and the heading of paragraph (k)(9);

c. Add paragraphs (k)(2)(iii) and (k)(10).

The additions and revisions read as follows:

§ 679.4 Permits.

* * * * *

(k) * * *

(2) * * *

(iii) A vessel may use a maximum of five jig machines, one line per jig machine, and a maximum of 30 hooks per line, to conduct directed fishing for license limitation groundfish in the GOA without a groundfish license;

* * * * *

(3) * * *

(i) *Vessel MLOA*—(A) *General.* A license may be used only on a vessel named on the license, a vessel that complies with the vessel designation and gear designation specified on the license, and a vessel that has an LOA less than or equal to the MLOA specified on the license;

(B) *Modification of license MLOA for groundfish licenses with a Pacific cod endorsement in the GOA.* (*1*) A groundfish license with a specified MLOA less than or equal to 50 feet prior to [EFFECTIVE DATE OF THE FINAL RULE] that subsequently receives a Pacific cod endorsement in the GOA with a catcher vessel and pot gear designation as specified under paragraph (k)(10) of this section will be redesignated with an MLOA of 50 feet on the date that the Pacific cod endorsement is assigned to that groundfish license;

(*2*) A groundfish license with a specified MLOA greater than or equal to 60 feet:

(*i*) That was continuously assigned to a single vessel less than 60 feet LOA from January 1, 2002, through December 8, 2008; and

(*ii*) That met the landing thresholds applicable for a groundfish license with a specified MLOA of less than 60 feet for the specific gear designation(s) and regulatory area(s) applicable to that groundfish license as described in paragraph (k)(10), will be redesignated with an MLOA equal to the LOA of the vessel to which that groundfish license was assigned from January 1, 2002, through December 8, 2008, based on the LOA for that vessel in NMFS' non-trawl gear recent participation official record on [EFFECTIVE DATE OF THE FINAL RULE], or as specified by a marine survey conducted by an independent certified marine surveyor or naval architect provided that the license holder provides NMFS with a marine survey conducted by an independent certified marine surveyor or naval architect not later than 90 days after [EFFECTIVE DATE OF THE FINAL RULE] that specifies the LOA of the vessel to which that groundfish license was assigned.

(*3*) The MLOA specified on a groundfish license under paragraph (k)(3)(i)(B)(*2*) of this section may not exceed 60 feet.

* * * * *

(9) *Pacific cod endorsements in the BSAI.*

* * * * *

(10) *Pacific cod endorsements in the Western and Central GOA*—(i) *General.* In addition to other requirements of this part, and unless specifically exempted in paragraph (k)(10)(iv) of this section, a license holder must have a Pacific cod endorsement on his or her groundfish license to conduct directed fishing for Pacific cod in the Western Gulf of Alaska or Central Gulf of Alaska with hook-and-line gear, pot gear, or jig gear on a vessel using more than five jig machines, more than one line per machine, and more than 30 hooks per line. A license holder can only use the specific non-trawl gear(s) indicated on his or her license to conduct directed fishing for Pacific cod in the Western Gulf of Alaska or Central Gulf of Alaska.

(ii) *Eligibility requirements for a Pacific cod endorsement.* This table provides eligibility requirements for Pacific cod endorsements on an LLP groundfish license:

If a license holder's license has a * * *	And that license has an MLOA of * * *	And the license holder harvested Pacific cod with * * *	Then the license holder must demonstrate that he or she * * *	From January 1, 2002, through December 8, 2008, in * * *	To receive a Pacific cod endorsement that authorizes harvest in the directed Pacific cod fishery with * * *
(A) Catcher vessel designation.	< 60 feet	hook-and-line gear	legally landed at least 10 mt of Pacific cod in the directed Pacific cod fishery.	the Central Gulf of Alaska.	hook-and-line gear in the Central Gulf of Alaska.
(B) Catcher vessel designation.	≥ 60 feet	hook-and-line gear	legally landed at least 50 mt of Pacific cod in the directed Pacific cod fishery.	the Central Gulf of Alaska.	hook-and-line gear in the Central Gulf of Alaska.
(C) Catcher vessel designation.	< 60 feet	hook-and-line gear	legally landed at least 10 mt of Pacific cod in the directed Pacific cod fishery.	the Western Gulf of Alaska.	hook-and-line gear in the Western Gulf of Alaska.
(D) Catcher vessel designation.	≥ 60 feet	hook-and-line gear	legally landed at least 50 mt of Pacific cod in the directed Pacific cod fishery.	the Western Gulf of Alaska.	hook-and-line gear in the Western Gulf of Alaska.
(E) Catcher vessel designation.	< 60 feet	pot gear	legally landed at least 10 mt of Pacific cod in the directed Pacific cod fishery.	the Central Gulf of Alaska.	pot gear in the Central Gulf of Alaska.
(F) Catcher vessel designation.	≥ 60 feet	pot gear	legally landed at least 50 mt of Pacific cod in the directed Pacific cod fishery.	the Central Gulf of Alaska.	pot gear in the Central Gulf of Alaska.
(G) Catcher vessel designation.	< 60 feet	pot gear	legally landed at least 10 mt of Pacific cod in the directed Pacific cod fishery.	the Western Gulf of Alaska.	pot gear in the Western Gulf of Alaska.
(H) Catcher vessel designation.	≥ 60 feet	pot gear	legally landed at least 50 mt of Pacific cod in the directed Pacific cod fishery.	the Western Gulf of Alaska.	pot gear in the Western Gulf of Alaska.
(I) Catcher vessel designation.	any	jig gear	at least one legal landing of Pacific cod in the directed Pacific cod fishery.	the Central Gulf of Alaska.	jig gear in the Central Gulf of Alaska.
(J) Catcher vessel designation.	any	jig gear	at least one legal landing of Pacific cod in the directed Pacific cod fishery.	the Western Gulf of Alaska.	jig gear in the Western Gulf of Alaska.
(K) Catcher/Processor vessel designation.	any	hook-and-line gear	legally landed at least 50 mt of Pacific cod in the directed Pacific cod fishery.	the Central Gulf of Alaska.	hook-and-line gear in the Central Gulf of Alaska.
(L) Catcher/Processor vessel designation.	any	hook-and-line gear	legally landed at least 50 mt of Pacific cod in the directed Pacific cod fishery.	the Western Gulf of Alaska.	hook-and-line gear in the Western Gulf of Alaska.
(M) Catcher/Processor vessel designation.	any	pot gear	legally landed at least 50 mt of Pacific cod in the directed Pacific cod fishery.	the Central Gulf of Alaska.	pot gear in the Central Gulf of Alaska.
(N) Catcher/Processor vessel designation.	any	pot gear	legally landed at least 50 mt of Pacific cod in the directed Pacific cod fishery.	the Central Gulf of Alaska.	pot gear in the Central Gulf of Alaska.
(O) Catcher/Processor vessel designation.	any	jig gear	at least one legal landing in the directed Pacific cod fishery.	the Central Gulf of Alaska.	jig gear in the Central Gulf of Alaska.
(P) Catcher/Processor vessel designation.	any	jig gear	at least one legal landing in the directed Pacific cod fishery.	the Western Gulf of Alaska.	jig gear in the Western Gulf of Alaska.

(iii) *Explanations for Pacific cod endorsements.* (A) All eligibility amounts in the table at paragraph (k)(10)(ii) of this section will be determined based on round weight equivalents.

(B) NMFS shall assign a legal landing to a groundfish license in an area based only on information contained in the official record described in paragraph (k)(10)(v) of this section.

(C) Notwithstanding the eligibility amount in the table at paragraph (k)(10)(ii) of this section, NMFS shall assign a non-trawl Pacific cod endorsement with a catcher/processor and a hook-and-line gear designation in the regulatory areas specified to those groundfish licenses listed in Table 49 to part 679;

(D) If a groundfish license meets the criteria described in paragraph (k)(3)(i)(B)(*2*) of this section and NMFS has redesignated the MLOA of that groundfish license based on those criteria, then NMFS may assign a non-trawl Pacific cod endorsement with the specific gear designation(s) and regulatory area(s) applicable to the redesignated MLOA of that groundfish license based on the eligibility criteria established in paragraph (k)(10)(ii) of this section; and

(E) NMFS may issue groundfish licenses with non-trawl Pacific cod endorsements to CQEs as specified in paragraph (k)(10)(vi) of this section.

(iv) *Exemptions to Pacific cod endorsements.* Any vessel exempted from the License Limitation Program at paragraph (k)(2) of this section.

(v) *Non-trawl gear recent participation official record.* (A) The official record will contain all information used by the Regional

Administrator to determine the following:

(*1*) The number of legal landings and amount of legal landings assigned to a groundfish license for purposes of the non-trawl gear designation participation requirements described in paragraph (k)(10)(ii) of this section;

(*2*) All other relevant information necessary to administer the requirements described in paragraphs (k)(3)(i)(B) and (k)(10) of this section.

(B) The official record is presumed to be correct. A groundfish license holder has the burden to prove otherwise.

(C) Only legal landings as defined in § 679.2 and documented on State of Alaska fish tickets or NMFS weekly production reports will be used to assign legal landings to a groundfish license.

(D) If more than one groundfish license holder is claiming the same legal landing because their groundfish license designated the vessel at the time that the legal landing was made, then each groundfish license for which the legal landing is being claimed will be credited with the legal landing.

(E) The Regional Administrator will specify by letter a 30-day evidentiary period during which an applicant may provide additional information or evidence to amend or challenge the information in the official record. A person will be limited to one 30-day evidentiary period. Additional information or evidence received after the 30-day evidentiary period specified in the letter has expired will not be considered for purposes of the initial administrative determination (IAD).

(F) The Regional Administrator will prepare and send an IAD to the applicant following the expiration of the 30-day evidentiary period if the Regional Administrator determines that the information or evidence provided by the person fails to support the person's claims and is insufficient to rebut the presumption that the official record is correct, or if the additional information, evidence, or revised application is not provided within the time period specified in the letter that notifies the applicant of his or her 30-day evidentiary period. The IAD will indicate the deficiencies with the information, or with the evidence submitted in support of the information. The IAD will also indicate which claims cannot be approved based on the available information or evidence. A person who receives an IAD may appeal pursuant to § 679.43. A person who avails himself or herself of the opportunity to appeal an IAD will receive a non-transferable license pending the final resolution of that appeal, notwithstanding the eligibility of that applicant for some claims based on consistent information in the official record.

(vi) *Issuance of non-trawl groundfish licenses to CQEs.* (A) Each CQE that has been approved by the Regional Administrator under the requirements of § 679.41(l)(3) to represent a community listed in Table 50 to part 679 may apply to receive groundfish licenses on behalf of the communities listed in Table 50 to part 679 that CQE is designated to represent. In order to receive a groundfish license, a CQE must submit a complete application for a groundfish license to the Regional Administrator, NMFS, P.O. Box 21668, Juneau, AK 99802. A CQE may not apply for, and may not receive, more than the maximum amount of groundfish licenses designated in the regulatory area specified for a community listed in Table 50 to part 679.

(B) The application for a CQE to receive a groundfish license must include:

(*1*) Name of contact person(s) for the CQE, NMFS person number, permanent business mailing addresses, business phone, business email, and business fax.

(*2*) A statement describing the procedures that will be used to determine the distribution of LLP licenses to residents of the community represented by that CQE;

(*3*) Procedures used to solicit requests from residents to be assigned an LLP license;

(*4*) Criteria used to determine the distribution of the use of LLP licenses among qualified community residents and the relative weighting of those criteria;

(*5*) The gear designation of groundfish license for which the CQE is applying provided that the community for which the CQE is applying is eligible to receive a groundfish license designated for the Central Gulf of Alaska and the application to receive a groundfish license has been received by NMFS not later than six months after [EFFECTIVE DATE OF THE FINAL RULE].

(C) A groundfish license approved for issuance to a CQE by the Regional Administrator for a community listed in Table 50 to part 679:

(*1*) May not be transferred to any person from the CQE;

(*2*) Will have only the regional designation specified for that community as listed in Table 50 to part 679;

(*3*) Will have an MLOA of 60 feet specified on the license;

(*4*) Will have only a catcher vessel designation;

(*5*) Will receive only a non-trawl gear endorsement;

(*6*) Will be assigned a Pacific cod endorsement with a non-trawl gear designation as specified in paragraph (k)(10)(vi)(D) of this section.

(*7*) May not be assigned to any vessel other than the vessel specified for that groundfish license in the annual CQE authorization letter; and

(*8*) May not be assigned for use by any person(s) other than the person(s) specified for that groundfish license in the annual CQE authorization letter, or any subsequent amendment to that authorization letter that is made by the CQE provided that NMFS receives that amendment prior to that person using that groundfish license aboard a vessel.

(D) The CQE must provide a copy of the annual CQE authorization letter, and any subsequent amendment to that authorization letter that is made by the CQE to the vessel operator prior to the person(s) designated in the authorization letter using that groundfish license aboard a vessel. The vessel operator must maintain a copy of the annual CQE authorization letter, and any subsequent amendment to that authorization letter that is made by the CQE onboard the vessel when that vessel is directed fishing for Pacific cod under the authority of that groundfish license.

(E) The CQE must attest in the annual CQE authorization letter, or any subsequent amendment to that authorization letter, that the person(s) using a groundfish license issued to a CQE:

(*1*) Is a citizen of the United States;

(*2*) Has maintained a domicile in a CQE community in the Central GOA or Western GOA eligible to receive an LLP license endorsed for Pacific cod for the 12 consecutive months immediately preceding the time when the assertion of residence is made; and

(*3*) Is not claiming residency in another community, state, territory, or country, except that residents of the Village of Seldovia shall be considered to be eligible community residents of the City of Seldovia for the purposes of eligibility to serve as an authorized person.

(F) Non-trawl Pacific cod gear endorsements on groundfish licenses approved for issuance to CQEs by the Regional Administrator shall have the following gear designations:

(*1*) NMFS will issue only pot gear Pacific cod endorsements for groundfish licenses with a Western Gulf of Alaska designation to CQEs on behalf of a community listed in Table 50 to part 679.

(*2*) NMFS will issue either a pot gear or a hook-and-line gear Pacific cod endorsement for a groundfish license with a Central Gulf of Alaska designation to CQEs on behalf of a community listed in Table 50 to part 679 based on the application for a groundfish license as described in paragraph (k)(10)(vi)(B) of this section provided that application is received by NMFS not later than six months after [EFFECTIVE DATE OF THE FINAL RULE]. If an application to receive a groundfish license with a Central Gulf of Alaska designation on behalf of a community listed in Table 50 to part 679 is received later than six months after [EFFECTIVE DATE OF THE FINAL RULE], NMFS will issue an equal number of pot gear and hook-and-line gear Pacific cod endorsements for a groundfish license issued to the CQE on behalf of a community listed in Table 50 to part 679. In cases where the total number of groundfish licenses issued on behalf of a community listed in Table 50 to part 679 is not even, NMFS will issue one more groundfish license with a pot gear Pacific cod endorsement than the number of groundfish licenses with a hook-and-line gear Pacific cod endorsement.

(G) By January 31, the CQE shall submit a complete annual report on use of groundfish licenses issued to the CQE for the prior fishing year for each community represented by the CQE to the Regional Administrator, NMFS, P.O. Box 21668, Juneau, AK 99802, and to the governing body of each community represented by the CQE as identified in Table 21 to this part, and to the governing body of each community represented by the CQE as identified in Table 21 to this part. A complete annual report contains the following information:

(*1*) The number of community residents requesting a groundfish license;

(*2*) A description of the distribution of groundfish licenses among community residents;

(*3*) Vessels assigned to use the groundfish licenses;

(*4*) The number and residency of crew employed on a vessel using the LLP license; and

(*5*) Any payments made to CQEs for use of the LLP licenses. Consistent with the timeline required for submission of the CQE annual report for the use of halibut and sablefish IFQ, these annual reports would be due by January 31 for the prior fishing year for each community represented by the CQE.

* * * * *

3. In § 679.7,

a. Paragraphs (a)(7)(vii) through (a)(7)(ix) are added;

b. Paragraph (i)(1)(i) is revised;

c. Paragraph (i)(1)(v) is added; and

d. Paragraph (i)(10) is added.

The additions and revisions read as follows:

§ 679.7 Prohibitions.

* * * * *

(a) * * *

(7) * * *

(vii) Operate a vessel in the "inshore component of the GOA" as defined in § 679.2 during a calendar year if that vessel is used to directed fish for Pacific cod under the authority of a groundfish license with a Pacific cod endorsement in the regulatory area listed in Table 49 to part 679.

(viii) Use a vessel operating under the authority of a groundfish license with a Pacific cod endorsement to directed fish for Pacific cod in the GOA apportioned to the inshore component of the GOA as specified under § 679.20(a)(6) if that vessel has directed fished for Pacific cod in the GOA apportioned to the offshore component of the GOA during that calendar year.

(ix) Use a vessel operating under the authority of a groundfish license with a Pacific cod endorsement to directed fish for Pacific cod in the GOA apportioned to the offshore component of the GOA as specified under § 679.20(a)(6) if that vessel has directed fished for Pacific cod in the GOA apportioned to the inshore component of the GOA during that calendar year.

* * * * *

(i) * * *

(1) * * *

(i) Hold more than 10 groundfish licenses in the name of that person at any time, except as provided in paragraphs (i)(1)(iii) and (i)(1)(v) of this section;

* * * * *

(v) The CQE representing the City of Sand Point may not hold more than 14 groundfish licenses.

* * * * *

(10) Operate a vessel under the authority of an LLP license issued to a CQE to directed fish for Pacific cod in the GOA if the person specified for that groundfish license in the annual CQE authorization letter, or any subsequent amendment to that authorization letter, is not onboard the vessel.

* * * * *

4. Tables 49 and 50 to part 679 are added to read as follows:

TABLE 49 TO PART 679—GROUNDFISH LICENSES QUALIFYING FOR HOOK-AND-LINE CATCHER/PROCESSOR ENDORSEMENT EXEMPTION

Groundfish license	Shall receive a Pacific cod endorsement with a catcher/processor and a hook-and-line designation in the following regulatory area(s)
LLG 1400	Central Gulf of Alaska.
LLG 1713	Central Gulf of Alaska.
LLG 1785	Central Gulf of Alaska.
LLG 1916	Central Gulf of Alaska.
LLG 2112	Central Gulf of Alaska and Western Gulf of Alaska.
LLG 2783	Central Gulf of Alaska.
LLG 2892	Central Gulf of Alaska.
LLG 2958	Central Gulf of Alaska.
LLG 3616	Central Gulf of Alaska.
LLG 3617	Central Gulf of Alaska.
LLG 3676	Central Gulf of Alaska.
LLG 4823	Central Gulf of Alaska.
LLG 2081	Western Gulf of Alaska.
LLG 3090	Western Gulf of Alaska.

TABLE 50 TO PART 679—MAXIMUM NUMBER OF GROUNDFISH LICENSES AND THE REGULATORY AREA SPECIFICATION OF GROUNDFISH LICENSES THAT MAY BE GRANTED TO CQEs REPRESENTING SPECIFIC GOA COMMUNITIES

Central GOA Pacific cod endorsed non-trawl groundfish license		Western GOA Pacific cod endorsed non-trawl groundfish license	
Community	Maximum number of groundfish licenses that may be granted	Community	Maximum number of groundfish licenses that may be granted
Akhiok	2	Ivanof Bay	2
Chenega Bay	2	King Cove	9
Chignik	3	Perryville	2
Chignik Lagoon	4	Sand Point	14
Chignik Lake	2		
Halibut Cove	2		
Karluk	2		
Larsen Bay	2		
Nanwalek	2		
Old Harbor	5		
Ouzinkie	9		
Port Graham	2		
Port Lions	6		
Seldovia	8		
Tyonek	2		
Tatitlek	2		
Yakutat	3		

[FR Doc. 2010–18143 Filed 7–22–10; 8:45 am]

BILLING CODE 3510–22–P

Notices

Federal Register
Vol. 75, No. 141
Friday, July 23, 2010

This section of the FEDERAL REGISTER contains documents other than rules or proposed rules that are applicable to the public. Notices of hearings and investigations, committee meetings, agency decisions and rulings, delegations of authority, filing of petitions and applications and agency statements of organization and functions are examples of documents appearing in this section.

DEPARTMENT OF AGRICULTURE

Food Safety and Inspection Service

[Docket No. FSIS–2010–0017]

Notice of Request for Revision of a Currently Approved Information Collection (Specified Risk Materials)

AGENCY: Food Safety and Inspection Service, USDA.

ACTION: Notice and request for comments.

SUMMARY: In accordance with the Paperwork Reduction Act of 1995 and Office of Management and Budget (OMB) regulations, this notice announces the Food Safety and Inspection Service's (FSIS) intention to request revision of an approved information collection regarding specified risk materials (SRMs) in cattle because the OMB approval will expire on January 31, 2011, and to incorporate another approved information collection, Specified Risk Materials—Transport.

DATES: Comments on this notice must be received on or before September 21, 2010.

ADDRESSES: FSIS invites interested persons to submit comments on this notice. Comments may be submitted by either of the following methods:

- *Federal eRulemaking Portal:* This Web site provides the ability to type short comments directly into the comment field on this Web page or attach a file for lengthier comments. Go to *http://www.regulations.gov.* Follow the on-line instructions at that site for submitting comments.
- *Mail, including floppy disks or CD–ROMs, and hand- or courier-delivered items:* Send to Docket Clerk, U.S. Department of Agriculture, Food Safety and Inspection Service, Room 2–2175, George Washington Carver Center, 5601 Sunnyside Avenue, Beltsville, MD 20705.

Instructions: All items submitted by mail or electronic mail must include the Agency name and docket number FSIS–2010–0017. Comments received in response to this docket will be made available for public inspection and posted without change, including any personal information, to *http://www.regulations.gov.*

Docket: For access to background documents or comments received, go to the FSIS Docket Room at the address listed above between 8:30 a.m. and 4:30 p.m., Monday through Friday.

For Additional Information: Contact John O'Connell, Paperwork Reduction Act Coordinator, Food Safety and Inspection Service, USDA, 1400 Independence Avenue, SW., Room 6065, South Building, Washington, DC 20250, (202) 720–0345.

SUPPLEMENTARY INFORMATION:

Title: Specified Risk Materials.

OMB Number: 0583–0129.

Expiration Date of Approval: 1/31/2011 (SRM—Transport information collection approval expires on 12/31/2010.)

Type of Request: Revision of a currently approved information collection.

Abstract: FSIS has been delegated the authority to exercise the functions of the Secretary as specified in the Federal Meat Inspection Act (FMIA) (21 U.S.C. 601, *et seq.*). This statute provides that FSIS is to protect the public by verifying that meat products are safe, wholesome, not adulterated, and properly labeled and packaged.

FSIS is requesting revision of an approved information collection addressing paperwork requirements regarding the regulations relating to SRMs in cattle because the OMB approval will expire on January 31, 2011, and to combine it with another related approved information collection, Specified Risk Materials—Transport.

FSIS requires that official establishments that slaughter cattle or process carcasses or parts of cattle develop written procedures for the removal, segregation, and disposition of SRMs. The Agency requires that these establishments maintain daily records to document the implementation and monitoring of their procedures for the removal, segregation, and disposition of SRMs and any corrective actions that they take to ensure that the procedures are effective (9 CFR 310.22).

FSIS also requires official slaughter establishments that transport carcasses or parts of cattle that contain vertebral columns from cattle 30 months of age and older to another federally inspected establishment for further processing to maintain records that verify that the official establishment that received the carcasses or parts, removed and properly disposed of the portions of the vertebral column designated as SRMs (9 CFR 310.22(g)).

This monitoring and recordkeeping is necessary for establishments to further ensure—and for FSIS to verify—that meat and meat products distributed in commerce for use as human food do not contain SRMs.

FSIS has made the following estimates for the revised information collection that combines the two approved information collections based upon an information collection assessment:

Estimate of Burden: FSIS estimates that it will take respondents an average of approximately .12 hours per response.

Respondents: Official establishments that slaughter cattle or process parts of cattle.

Estimated No. of Respondents: 3,512.

Estimated No. of Annual Responses per Respondent: 303.

Estimated Total Annual Burden on Respondents: 123,916 hours.

Copies of this information collection assessment can be obtained from John O'Connell, Paperwork Reduction Act Coordinator, Food Safety and Inspection Service, USDA, 1400 Independence Avenue, SW., Room 6065, South Building, Washington, DC 20250, (202)720–0345.

Comments are invited on: (a) Whether the proposed collection of information is necessary for the proper performance of FSIS's functions, including whether the information will have practical utility; (b) the accuracy of FSIS's estimate of the burden of the proposed collection of information, including the validity of the methodology and assumptions used; (c) ways to enhance the quality, utility, and clarity of the information to be collected; and (d) ways to minimize the burden of the collection of information, including through the use of appropriate automated, electronic, mechanical, or other technological collection techniques or other forms of information

technology. Comments may be sent both to FSIS, at the addresses provided above, and to the Desk Officer for Agriculture, Office of Information and Regulatory Affairs, Office of Management and Budget, Washington, DC 20253.

Responses to this notice will be summarized and included in the request for OMB approval. All comments will also become a matter of public record.

Additional Public Notification

Public awareness of all segments of rulemaking and policy development is important. Consequently, in an effort to ensure that the public and in particular minorities, women, and persons with disabilities, are aware of this notice, FSIS will announce it on-line through the FSIS Web page located at *http://www.fsis.usda.gov/regulations/2010_Notices_Index/index.asp.*

FSIS also will make copies of this **Federal Register** publication available through the *FSIS Constituent Update,* which is used to provide information regarding FSIS policies, procedures, regulations, **Federal Register** notices, FSIS public meetings, and other types of information that could affect or would be of interest to our constituents and stakeholders. The *Update* is communicated via Listserv, a free e-mail subscription service consisting of industry, trade, and farm groups, consumer interest groups, allied health professionals, scientific professionals, and other individuals who have requested to be included. The *Update* also is available on the FSIS Web page. Through Listserv and the Web page, FSIS is able to provide information to a much broader, more diverse audience.

In addition, FSIS offers an e-mail subscription service which provides automatic and customized access to selected food safety news and information. This service is available at *http://www.fsis.usda.gov/news_and_events/email_subscription/.* Options range from recalls to export information to regulations, directives and notices. Customers can add or delete subscriptions themselves, and have the option to password protect their accounts.

Done at Washington, DC, on July 16, 2010.

Alfred V. Almanza,

Administrator.

[FR Doc. 2010–18094 Filed 7–22–10; 8:45 am]

BILLING CODE 3410–DM–P

DEPARTMENT OF AGRICULTURE

Forest Service

Ochoco National Forest, Lookout Mountain Ranger District; Oregon; Howard Elliot Johnson Fuels and Vegetation Management Project EIS

AGENCY: Forest Service, USDA.

ACTION: Notice of intent to prepare an environmental impact statement.

SUMMARY: The Ochoco National Forest is preparing an environmental impact statement (EIS) to analyze the effects of managing fuels and vegetation within the 44,858-acre Howard Elliot Johnson project area, which is approximately 23 miles east of Prineville, Oregon. The project area includes National Forest and Bureau of Land Management System lands in the Howard, Elliot, and Johnson subwatersheds. The alternatives that will be analyzed include the proposed action, no action, and additional alternatives that respond to issues generated through the scoping process. The Ochoco National Forest will give notice of the full environmental analysis and decisionmaking process so interested and affected people may participate and contribute to the final decision.

DATES: Comments concerning the scope of the analysis must be received by August 23, 2010. The draft environmental impact statement is expected to be completed and available for public comment in December, 2010. The final environmental impact statement is expected to be completed in May, 2011.

ADDRESSES: Send written comments to Maurice Evans, Acting District Ranger, Lookout Mountain District, Ochoco National Forest, 3160 NE. Third Street, Prineville, Oregon 97754.

Alternately, electronic comments may be sent to *comments-pacificnorthwestochoco@fs.fed.us.* Electronic comments must be submitted as part of the actual e-mail message, or as an attachment in plain text (.txt), Microsoft Word (.doc), rich text format (.rtf), or portable document format (.pdf).

FOR FURTHER INFORMATION CONTACT: Kristy Swartz, Project Leader, or Marcy Anderson, Environmental Coordinator, at 3160 NE. Third Street, Prineville, Oregon 97754, or at (541) 416–6500, or by e-mail at *Kristy_swartz@blm.gov* or *marcelleanderson@fs.fed.us.*

Responsible Official: The responsible official will be Jeff Walter, Forest Supervisor, Ochoco National Forest, 3160 NE. Third Street, Prineville, Oregon 97754.

SUPPLEMENTARY INFORMATION:

Purpose and Need. The Lookout Mountain Ranger District has determined that there is a need for fuels and vegetation management activities in the project area by comparing the existing condition to the desired conditions described in the Ochoco National Forest Land and Resource Management Plan. The existing condition of the Howard, Elliot, and Johnson subwatersheds was evaluated in 2004 and documented in the Howard Elliot Johnson Watershed Analysis. Generally speaking, the Watershed Analysis determined that vegetation condition in the subwatersheds has departed from the historic condition in several ways. Important departures include changes in timber species compositions, a reduction in single-stratum late and old structured forest (LOS), an increased risk of large-scale loss of forest to wildfire, an increased risk of insect infestation and/or disease that can impact timber stands, and a decline in the condition of riparian vegetation.

The purpose and need for this proposal is to (1) Maintain and increase the abundance of late and old structure (LOS) stands, especially single-stratum LOS. (2) Reduce wildfire hazard within areas identified as "at risk of loss." (3) Outside of areas identified as "at risk of loss," maintain or restore vegetative and fuel conditions within historic ranges of species composition, structure, and condition. (4) Reduce the susceptibility of the landscape to infestation by insects and disease. (5) Enhance hardwood communities, such as aspen and cottonwood. (6) Increase riparian vegetation and large tree structure in Riparian Habitat Conservation Areas (RHCAs).

Proposed Action. The proposed action includes a variety of management strategies and activities, including commercial harvest with follow-up precommercial thinning and/or slash treatment (4,138 acres), precommercial thinning with slash treatment (2,712 acres), juniper cutting with slash treatment (1,204 acres), hardwood and riparian vegetation treatment (658 acres), underburning where no other treatments are proposed (8,705 acres), riparian planting with no other treatment (35 acres). Implementation of the proposed action would require the following connected actions: reconstruction of approximately four miles of existing roads and construction of approximately 15 miles of temporary roads that would be obliterated upon conclusion of project activities. No new permanent roads would be constructed.

Seed tree harvest (198 acres) and shelterwood harvest (71 acres) is proposed in nine units ranging in size from 6 to 78 acres. These treatments would occur in stands that are impacted heavily by insects and disease and are at high risk of stand replacement wildfire. These units will continue to decline and will not move toward desired conditions until a stand replacement event occurs. Regeneration of these units would allow for the establishment of a healthy stand of early seral trees, which could then move towards the desired conditions. Regeneration treatments in late and old structure stands would require a forest plan amendment.

Issues. Preliminary issues identified include the potential effects of the proposed action on wildlife habitat, water quality, fish habitat, visual quality, and recreational use. In addition, the interdisciplinary planning team will analyze the cumulative effects of this proposed action where it overlaps with the effects of other activities.

Comment. Public comments about this proposal are requested in order to assist in identifying issues, determine how to best manage the resources, and to focus the analysis. Comments received in response to this notice, including names and addresses of those who comment, will be considered part of the public record on this proposed action and will be available for public inspection. Comments submitted anonymously will be accepted and considered; however, those who submit anonymous comments will not have standing to appeal the subsequent decision under 36 CFR parts 215 and 217.

Additionally, pursuant to 7 CFR 1.27(d), any person may request the agency to withhold a submission from the public record by showing how the Freedom of Information Act (FOIA) permits such confidentiality. Persons requesting such confidentiality should be aware that, under FOIA, confidentiality may be granted in only very limited circumstances, such as to protect trade secrets. The Forest Service will inform the requester of the agency's decision regarding the request for confidentiality, and where the request is denied; the agency will return the submission and notify the requester that the comments may be resubmitted with or without name and address within a specified number of days.

A draft ETS will be filed with the Environmental Protection Agency (EPA) and available for public review by December, 2010. The EPA will publish a Notice of Availability (NOA) of the draft EIS in the **Federal Register**. The final EIS is scheduled to be available May, 2011.

The comment period on the draft EIS will be 45 days from the date the EPA publishes the notice of availability in the **Federal Register**.

The Forest Service believes, at this early stage, it is important to give reviewers notice of several court rulings related to public participation in the environmental review process. First, reviewers of a draft EIS must structure their participation in the environmental review of the proposal so that it is meaningful and alerts an agency to the reviewer's position and contentions [*Vermont Yankee Nuclear Power Corp.* v. *NRDC,* 435 U.S. 519, 553 (1978)]. Also, environmental objections that could be raised at the draft ETS stage but that are not raised until after completion of the final EIS may be waived or dismissed by the courts [*City of Angoon* v. *Harris,* 490 F. Supp. 1334, 1338 (E.D. Wis. 1980)]. Because of these court rulings, it is very important that those interested in this proposed action participate by the close of the 45-day comment period so that substantive comments and objections are made available to the Forest Service at a time when it can meaningfully consider them and respond to them in the final EIS.

To assist the Forest Service in identifying and considering issues and concerns on the proposed action, comments on the draft EIS should be as specific as possible. It is also helpful if comments refer to specific pages or chapters of the draft statement. Comments may also address the adequacy of the draft EIS of the merits of the alternatives formulated and discussed in the statement. Reviewers may wish to refer to the Council on Environmental Quality Regulations for implementing the procedural provisions of the National Environmental Policy Act at 40 CFR 1503.3 in addressing these points.

In the final EIS, the Forest Service is required to respond to substantive comments received during the comment period for the draft EIS. The Forest Service is the lead agency and the responsible official is the Forest Supervisor, Ochoco National Forest. The responsible official will decide whether and how to conduct fuels and vegetation management activities in the Howard Elliot Johnson planning area. The responsible official will also decide how to mitigate impacts of these actions and will determine when and how monitoring of effects will take place.

The Howard Elliot Johnson Fuels and Vegetation Management Project decision and the reasons for the decision will be documented in the record of decision. That decision will be subject to Forest Service Appeal Regulations (35 CFR part 215).

Dated: July 15, 2010.

Maurice Evans,

Acting District Ranger.

[FR Doc. 2010–17803 Filed 7–22–10; 8:45 am]

BILLING CODE 3410–11–M

DEPARTMENT OF AGRICULTURE

Forest Service

Gogebic Resource Advisory Committee

AGENCY: Forest Service, USDA.

ACTION: Notice of meeting.

SUMMARY: The Gogebic Resource Advisory Committee will meet in Watersmeet, Michigan. The committee is meeting as authorized under the Secure Rural Schools and Community Self-Determination Act (Pub. L. 110–343) and in compliance with the Federal Advisory Committee Act. The purpose is to hold the first meeting of the newly formed committee.

DATES: The meeting will be held on August 12, 2010, and will begin at 9:30 a.m.

ADDRESSES: The meeting will be held at the Iron River and Watersmeet District Office, E23979 US 2 E., Watersmeet, Michigan. Written comments should be sent to Lisa Klaus, Ottawa National Forest, E6248 US Hwy. 2, Ironwood, MI 49938. Comments may also be sent via e-mail to *lklaus@fs.fed.us* or via facsimile to 906–932–0122.

All comments, including names and addresses when provided, are placed in the record and are available for public inspection and copying. The public may inspect comments received at Ottawa National Forest, E6248 US Hwy. 2, Ironwood, MI 49938.

FOR FURTHER INFORMATION CONTACT: Lisa Klaus, RAC coordinator, USDA, Ottawa National Forest, E6248 US Hwy. 2, Ironwood, MI, (906) 932–1330, ext. 328; e-mail *lklaus@fs.fed.us.*

Individuals who use telecommunication devices for the deaf (TDD) may call the Federal Information Relay Service (FIRS) at 1–800–877–8339 between 8:00 a.m. and 8:00 p.m., Eastern Standard Time, Monday through Friday.

SUPPLEMENTARY INFORMATION: The meeting is open to the public. The following business will be conducted: (1) Introductions of all committee members, replacement members and Forest Service personnel. (2) Selection

of a chairperson by the committee members. (3) Receive materials explaining the process for considering and recommending Title II projects; and (4) Public comment. Persons who wish to bring related matters to the attention of the Committee may file written statements with the Committee staff before or after the meeting.

Dated: July 16, 2010.

Susan J. Spear,

Designated Federal Officer.

[FR Doc. 2010–18056 Filed 7–22–10; 8:45 am]

BILLING CODE 3410–11–P

DEPARTMENT OF AGRICULTURE

Forest Service

Humboldt Resource Advisory Committee (RAC)

AGENCY: Forest Service, USDA.

ACTION: Notice of meeting.

SUMMARY: The Humboldt Resource Advisory Committee (RAC) will meet in Eureka, California. The committee meeting is authorized under the Secure Rural Schools and Community Self-Determination Act (Pub. L. 110–343) and in compliance with the Federal Advisory Committee Act.

DATES: The meeting will be held August 10, 2010, from 5 p.m. to 7 p.m.

ADDRESSES: The meeting will be held at the Six Rivers National Forest Office, 1330 Bayshore Way, Eureka, CA 95501.

FOR FURTHER INFORMATION CONTACT: Julie Ranieri, Committee Coordinator, at (707) 441–3673; e-mail *jranieri@fs.fed.us.*

SUPPLEMENTARY INFORMATION: The meeting is open to the public. The purpose of the meeting is to develop the process and timeline for soliciting project proposals for funding under Title II of the Act and receive public comment on the meeting subjects and proceedings.

Dated: July 16, 2010.

Tyrone Kelley,

Forest Supervisor.

[FR Doc. 2010–18062 Filed 7–22–10; 8:45 am]

BILLING CODE 3410–11–P

DEPARTMENT OF AGRICULTURE

Food Safety and Inspection Service

[Docket No. FSIS–2010–0021]

The National Advisory Committee on Meat and Poultry Inspection; Re-establishment

AGENCY: Food Safety and Inspection Service, USDA.

ACTION: Notice of re-chartering of Committee.

SUMMARY: In accordance with the Federal Advisory Committee Act, this notice announces that the Secretary of Agriculture signed the charter of the National Advisory Committee on Meat and Poultry Inspection (NACMPI) on June 19, 2010. The charter for the NACMPI is available for viewing on the NACMPI home page at *http://www.fsis.usda.gov/About_FSIS/NACMPI/index.asp.*

FOR FURTHER INFORMATION CONTACT: Tiffanie Newman, U.S. Department of Agriculture (USDA), Food Safety and Inspection Service (FSIS), Room 1180–S, 1400 Independence Avenue, SW., Washington, DC, 20250–3700 or by phone at (202) 720–3897 or by e-mail at *Tiffanie.Newman@fsis.usda.gov.*

SUPPLEMENTARY INFORMATION:

Background

The National Advisory Committee on Meat and Poultry Inspection provides advice and recommendations to the Secretary on meat and poultry inspection programs, pursuant to sections 7(c), 24, 205, 301(a)(3), and 301(c) of the Federal Meat Inspection Act [21 U.S.C. 607(c), 624, 645, 661(a)(3), 661(a)(4), and 661(c)] and to sections 5(a)(3), 5(c), 8(b), and 11(e) of the Poultry Products Inspection Act [21 U.S.C. 454(a)(3), 454(a)(4), 454(c), 457(b), and 460(e)]. The complexity of the issues to be addressed requires that the Committee meet at least twice per year. Members are appointed by the Secretary of USDA. Background materials are available on the Web at the address noted above or by contacting the person above.

USDA Nondiscrimination Statement

USDA prohibits discrimination in all its programs and activities on the basis of race, color, national origin, gender, religion, age, disability, political beliefs, sexual orientation, and marital or family status. (Not all prohibited bases apply to all programs.) Persons with disabilities who require alternative means for communication of program information (Braille, large print, or audiotape.) should contact USDA's Target Center at 202–720–2600 (voice and TTY).

To file a written complaint of discrimination, write USDA, Office of the Assistant Secretary for Civil Rights, 1400 Independence Avenue, SW., Washington, DC 20250–9410 or call 202–720–5964 (voice and TTY). USDA is an equal opportunity provider and employer.

Additional Public Notification

Public awareness of all segments of rulemaking and policy development is important. Consequently, in an effort to ensure that the public and in particular minorities, women, and persons with disabilities, are aware of this notice, FSIS will announce it on-line through the FSIS Web site located at *http://www.fsis.usda.gov/regulations_&_policies/2010_Notices_Index/index.asp.*

FSIS also will make copies of this **Federal Register** publication available through the FSIS Constituent Update (*http://www.fsis.usda.gov/news_&_events/Constituent_Update/index.asp*), which is used to provide information regarding FSIS policies, procedures, regulations, **Federal Register** notices, FSIS public meetings, recalls, and other types of information that could affect or would be of interest to our constituents and stakeholders. The Update is communicated via Listserv, a free electronic mail subscription service for industry, trade groups, consumer interest groups, health professionals, and other individuals who have asked to be included. The Update is also available on the FSIS Web page. Through the Listserv and Web page, FSIS is able to provide information to a much broader and more diverse audience. In addition, FSIS offers an electronic mail subscription service which provides automatic and customized access to selected food safety news and information. This service is available at *http://www.fsis.usda.gov/news_and_events/email_subscription/.* Options range from recalls to export information to regulations, directives and notices. Customers can add or delete subscriptions themselves, and have the option to password protect their accounts.

Done at Washington, DC on July 16, 2010.

Alfred V. Almanza,

Administrator.

[FR Doc. 2010–18026 Filed 7–22–10; 8:45 am]

BILLING CODE 3410–DM–P

DEPARTMENT OF AGRICULTURE

Foreign Agricultural Service

Trade Adjustment Assistance for Farmers

AGENCY: Foreign Agricultural Service, USDA.

ACTION: Notice.

The Administrator of the Foreign Agricultural Service (FAS) today accepted and began a review of a petition for trade adjustment assistance

filed under the FY 2011 Program by three lamb producers on behalf of lamb producers in Idaho, Utah, and Wyoming. A public hearing to review the merits of the petition will be held in Room 411–P, of Suite 400, Portals Office Building, 1250 Maryland Ave., SW., Washington, DC 20024, on July 21, 2010, at 11 a.m. ET. The Administrator will determine within 40 days whether or not increasing imports of lamb meat contributed importantly to a greater than 15-percent decrease in the production quantity of lambs compared to the average of the three preceding marketing years. If the determination is affirmative, producers who produce and market lambs in Idaho, Utah, and Wyoming will be eligible to apply to the Farm Service Agency for free technical assistance and cash benefits.

FOR FURTHER INFORMATION CONTACT: Trade Adjustment Assistance for Farmers Staff, FAS, USDA, *by phone:* (202) 720–0638, or (202) 690–0633; or by *e-mail: tradeadjustment@fas.usda.gov;* or visit the TAA for Farmers' *Web site: http://www.fas.usda.gov/itp/taa.*

Dated: July 14, 2010.

John D. Brewer,

Administrator, Foreign Agricultural Service.

[FR Doc. 2010–17809 Filed 7–22–10; 8:45 am]

BILLING CODE 3410–10–P

DEPARTMENT OF AGRICULTURE

Agricultural Marketing Service

[Document Number AMS—FV–09–0028, FV–09–327]

United States Standards for Grades of Frozen Vegetables

AGENCY: Agricultural Marketing Service, USDA.

ACTION: Notice.

SUMMARY: The Agricultural Marketing Service (AMS), prior to undertaking research and other work associated with revising official grade standards, is soliciting comments on the possible revisions to eighteen U.S. grade standards for frozen vegetables issued on or before July 22, 1985. AMS annually reviews its processed fruit and vegetable grade standards for suitability and has identified eighteen grade standards for frozen vegetables for possible revision.

AMS is considering replacing the two term system with a single term to describe each quality level for the grade standards identified in this notice. The term using the letter grade would be retained, and the descriptive term would be eliminated. For example, grade standards using the term "U.S. Grade A" or "U.S. Fancy" would be revised to use the single term "U.S. Grade A" and the terms "U.S. Grade B" or "U.S. Extra Standard" would be revised to use the single term "U.S. Grade B." In addition miscellaneous changes would be made to update a number of references to licensed supplier addresses and incorporate updated terminology that reflects current marketing practices.

AMS is seeking comments regarding these changes as well as any other possible revisions that may be necessary to better serve the industry.

DATES: Comments must be received by September 21, 2010.

ADDRESSES: Interested persons are invited to submit written comments on the Internet at http://www.regulations.gov or to Lydia E. Berry, Inspection and Standardization Section, Processed Products Branch, Fruit and Vegetable Programs, Agricultural Marketing Service, U.S. Department of Agriculture, 1400 Independence Ave., SW., Room 0709 South Building, STOP 0247, Washington, DC 20250–0247; phone: (202) 720–5021; fax: (202) 690–1527. Comments should make reference to the date and page number of this issue of the **Federal Register** and will be made available for public inspection at the above office during regular business hours. Please be advised that all comments submitted in response to this notice will be included in the record and will be made available to the public on the Internet via *http://www.regulations.gov.* Also, the identity of the individuals or entities submitting the comments will be made public. The U.S. grade standards for frozen vegetables identified in this notice are available either at the above address or by accessing the AMS Web site at: *http://www.ams.usda.gov/processed inspection.*

FOR FURTHER INFORMATION CONTACT: Lydia E. Berry, at the above address, by phone at 202–720–5021, or by e-mail *Lydia.berry@ams.usda.gov.*

SUPPLEMENTARY INFORMATION: Section 203(c) of the Agricultural Marketing Act of 1946 (7 U.S.C. 1621–1627), as amended, directs and authorizes the Secretary of Agriculture "to develop and improve standards of quality, condition, quantity, grade and packaging and recommend and demonstrate such standards in order to encourage uniformity and consistency in commercial practices." AMS is committed to carrying out this authority in a manner that facilitates the marketing of agricultural commodities and makes copies of official standards available upon request. The U.S. standards for frozen vegetables not connected with Federal marketing orders or U.S. import requirements no longer appear in the Code of Federal Regulations, but are maintained by AMS and are available on the Internet at *http://www.ams.usda.gov/processedinspection.*

AMS is considering revisions to these voluntary U.S. grade standards using procedures that appear in part 36, title 7 of the Code of Federal Regulations (7 CFR part 36).

Background

AMS periodically reviews the processed fruit and vegetable grade standards for usefulness in serving the industry. AMS has identified eighteen grade standards covering various frozen vegetables for possible revision. Prior to undertaking detailed work developing the proposed revisions to these grade standards, AMS is soliciting comments on the possible changes and any other comments regarding these grade standards to better serve the industry.

More recently developed grade standards use a single term, such as "U.S. Grade A" or "U.S. Grade B" to describe each level of quality within a grade standard. Older standards used a dual system, such as "U.S. Grade A" and "U.S. Fancy" to describe the same level of quality within a grade standard.

For the grade standards in the table below, AMS is requesting comments on replacing the two term system of naming levels of quality with single letter grade designations. The terms "U.S. Fancy", "U.S. Extra Standard", and "U.S. Standard" would be removed and the terms "U.S. Grade A," "U.S. Grade B," and "U.S. Grade C," would be used exclusively. These changes would conform to recent changes in other grade standards. AMS is also proposing editorial changes to these grade standards, providing updated addresses to obtain copies of the grade standards, and to remove specific addresses for licensed suppliers of color standards and inspection aids, and incorporate updated terminology that reflects current marketing practices. Contact information for current licensed suppliers is available on the Internet on the PPB Web site at: *http://www.ams.usda.gov/processedinspection.* These revisions will provide a format consistent with recent revisions of other grade standards. The following table summarizes the changes currently under consideration by AMS.

U.S. standards for grades of frozen	Effective date	Change level of quality designation to single term	Other revisions proposed
Asparagus	June 30, 1974	Yes	Update address for standards.
Lima Beans	May 22, 1957	Yes	Update address for standards. Remove address for color standard and inspection aid licensed supplier.
Speckled Butter (Lima) Beans	July 21, 1962	Yes	Update address for standards.
Carrots	February 28, 1974	Yes	Update address for standards. Update terminology.
Corn, Whole Kernel	August 1, 1952	Yes	Update address for standards. Update terminology.
Corn on the Cob	July 27, 1970	Yes	Update address for standards. Update terminology.
Onion Rings, Breaded	October 17, 1959	Yes	Update address for standards. Update terminology.
Peas	May 28, 1959	Yes	Update address for standards. Update terminology.
Peas and Carrots	March 20, 1955	Yes	Update address for standards.
Peppers, Sweet	March 13, 1959	Yes	Update address for standards. Update terminology.
Potatoes, French Fried	February 8, 1967	Yes	Update address for standards. Remove address for color standard and inspection aid licensed supplier. Update terminology.
Squash (Cooked)	October 15, 1953	Yes	Update address for standards.
Squash (Summer)	April 3, 1953	Yes	Update address for standards.
Succotash	March 6, 1959	Yes	Update address for standards. Update terminology.
Sweet Potatoes	September 4, 1962	Yes	Update address for standards.
Tomato Juice, Tomato Juice from Concentrate	July 22, 1985	No—Single terms currently used.	Update address for standards. Remove address for color standard and inspection aid licensed supplier.
Turnip Greens with Turnips	August 15, 1958	Yes	Update address for standards.
Vegetables, Mixed	May 24, 1954	Yes	Update address for standards.

This notice provides for a 60-day period for interested parties to comment on the changes under consideration by AMS as well as any additional changes to the standards. Should AMS conclude that there is a need for any revisions of the grade standards; the proposed revisions will be published in the **Federal Register** with a request for comments in accordance with 7 CFR part 36.

Authority: 7 U.S.C. 1621–1627.

Dated: July 20, 2010.

Rayne Pegg,

Administrator, Agricultural Marketing Service.

[FR Doc. 2010–18085 Filed 7–22–10; 8:45 am]

BILLING CODE 3410–02–P

DEPARTMENT OF AGRICULTURE

Agricultural Marketing Service

[Document No. AMS–FV–09–0049; FV–09–329]

United States Standards for Grades of Refried Beans

AGENCY: Agricultural Marketing Service, USDA.

ACTION: Notice; withdrawal.

SUMMARY: The Agricultural Marketing Service (AMS) is withdrawing a notice soliciting comments on the possible establishment of voluntary United States Standards for Grades of Refried Beans. After reviewing and considering industry input, the Agency has decided not to proceed further with this action.

DATES: *Effective Date:* July 23, 2010.

FOR FURTHER INFORMATION CONTACT: Lydia E. Berry, Inspection and Standardization Section, Processed Products Branch (PPB), Fruit and Vegetable Programs (FV), AMS, USDA, 1400 Independence Avenue, SW., Room 0709, South Building; STOP 0247, Washington, DC 20250; phone: (202) 720–5021; fax: (202) 690–1527.

Background

A trade association representing the processed food industry requested that USDA develop grade standards for canned refried beans to be used by the industry. AMS prepared a discussion draft of the proposed canned refried beans standards using information provided by the petitioner, and distributed copies to the trade association's members for comments. Input from the trade association's members was used to further develop the proposed grade standards.

Prior to undertaking additional research and other work associated with the establishment of official standards, a notice was published at 69 FR 40857 in the **Federal Register** soliciting comments on the proposed establishment of voluntary grade standards for canned refried beans. One comment was received from a food manufacturer as a result of that request. A copy of the comment is posted at *http://www.regulations.gov* and on the AMS Web site at: *http://www.ams.usda.gov/processedinspection.*

The commenter favored the development of the grade standards if AMS increased its scope to include dehydrated refried beans. AMS then discussed the proposed expansion of the standards to include the dehydrated refried beans with the original petitioner, the National Food Processors Association, now known as the Grocery Manufacturers Association (GMA). The GMA informed AMS that the association no longer supported development of any standards for refried beans. One company still expressed interest in development of the grade standards or refried beans. However, additional input from the company was not forthcoming.

Given these circumstances, AMS will not proceed further with this action.

Authority: 7 U.S.C. 1621–1627.

Dated: July 20, 2010.

Rayne Pegg,

Administrator, Agricultural Marketing Service.

[FR Doc. 2010–18084 Filed 7–22–10; 8:45 am]

BILLING CODE 3410–02–P

DEPARTMENT OF COMMERCE

International Trade Administration

[A–570–947]

Certain Steel Grating from the People's Republic of China: Antidumping Duty Order

AGENCY: Import Administration, International Trade Administration, Department of Commerce.

SUMMARY: Based on the affirmative final determination by the Department of Commerce (the "Department") and the International Trade Commission ("ITC"), the Department is issuing an antidumping duty order on certain steel grating ("steel grating") from the People's Republic of China ("PRC").

EFFECTIVE DATE: July 23, 2010.

FOR FURTHER INFORMATION CONTACT: Thomas Martin, AD/CVD Operations, Office 4, Import Administration, International Trade Administration, U.S. Department of Commerce, 14th Street and Constitution Avenue, NW, Washington, DC, 20230; telephone: (202) 482–3936.

SUPPLEMENTARY INFORMATION:

Background

In accordance with sections 735(d) and 777(i)(1) of the Tariff Act of 1930, as amended ("Act"), the Department published its affirmative final determination of sales at less than fair value ("LTFV") in the antidumping investigation of steel grating from the PRC. *See Certain Steel Grating From the People's Republic of China: Final Determination of Sales at Less Than Fair Value*, 75 FR 32366 (June 8, 2010) ("*Final Determination*"). On July 13, 2010, the ITC notified the Department of its affirmative determination of material injury to a U.S. industry. *See Certain Steel Grating from China*, Investigation Nos. 701–TA–465 and 731–TA–1161 (Final), USITC Publication 4168 (July 2010). Pursuant to section 736(a) of the Act, the Department is issuing the antidumping duty order on steel grating from the PRC.

Scope of the Order

The products covered by this order are certain steel grating, consisting of two or more pieces of steel, including load–bearing pieces and cross pieces, joined by any assembly process, regardless of: (1) size or shape; (2) method of manufacture; (3) metallurgy (carbon, alloy, or stainless); (4) the profile of the bars; and (5) whether or not they are galvanized, painted, coated, clad or plated. Steel grating is also commonly referred to as "bar grating," although the components may consist of steel other than bars, such as hot–rolled sheet, plate, or wire rod.

The scope of this order excludes expanded metal grating, which is comprised of a single piece or coil of sheet or thin plate steel that has been slit and expanded, and does not involve welding or joining of multiple pieces of steel. The scope of this order also excludes plank type safety grating which is comprised of a single piece or coil of sheet or thin plate steel, typically in thickness of 10 to 18 gauge, that has been pierced and cold formed, and does not involve welding or joining of multiple pieces of steel.

Certain steel grating that is the subject of this order is currently classifiable in the Harmonized Tariff Schedule of the United States ("HTSUS") under subheading 7308.90.7000. While the HTSUS subheading is provided for convenience and customs purposes, the written description of the scope of this order is dispositive.

Provisional Measures

Section 733(d) of the Act states that suspension of liquidation ordered pursuant to an affirmative preliminary determination may not remain in effect for more than four months except where exporters representing a significant proportion of exports of the subject merchandise request the Department to extend that four-month period to no more than six months. At the request of an exporter that accounted for a significant proportion of exports of steel grating, we extended the four-month period to no more than six months. *See Certain Steel Grating from the People's Republic of China: Postponement of Final Determination*, 75 FR 5766 (February 4, 2010). In this investigation, the six-month period beginning on the date of the publication of the *Preliminary Determination*[1] *(i.e.*, January 6, 2010) ended on July 5, 2010.

Section 737 of the Act states that definitive duties are to begin on the date of publication of the ITC's final injury determination. Therefore, in accordance with section 733(d) of the Act, we have instructed U.S. Customs and Border Protection ("CBP") to terminate suspension of liquidation and to liquidate without regard to antidumping duties (*i.e.*, release all bonds and refund all cash deposits), unliquidated entries of steel grating from the PRC entered, or withdrawn from warehouse, for consumption after July 5, 2010, and before the date of publication of the ITC's final injury determination in the **Federal Register**. Suspension of liquidation will resume on or after the date of publication of the ITC's final injury determination in the **Federal Register**.

Continuation of Suspension of Liquidation

In accordance with section 735(c)(1)(B) of the Act, we will instruct CBP to suspend liquidation on all entries of subject merchandise from the PRC. We will also instruct CBP to require cash deposits equal to the estimated amount by which the normal value exceeds the U.S. price as indicated in the chart below. These instructions suspending liquidation will remain in effect until further notice.

Antidumping Duty Order

On July 13, 2010, in accordance with section 735(d) of the Act, the ITC notified the Department of its final determination, pursuant to section 735(b)(1)(A)(i) of the Act, that an industry in the United States is materially injured by reason of LTFV imports of subject merchandise from the PRC. Therefore, in accordance with section 736(a)(1) of the Act, the Department will direct CBP to assess, upon further instruction by the Department, antidumping duties equal to the amount by which the normal value of the merchandise exceeds the export price (or constructed export price) of the merchandise for all relevant entries of steel grating from the PRC. These antidumping duties will be assessed on unliquidated entries of steel grating from the PRC entered, or withdrawn from the warehouse, for consumption on or after January 6, 2010 , the date on which the Department published its *Preliminary Determination*.

Effective on the date of publication of the ITC's final affirmative injury determination, CBP will require, at the same time as importers would normally deposit estimated duties on this merchandise, a cash deposit equal to the

[1] *See Certain Steel Grating From the People's Republic of China: Preliminary Determination of Sales at Less Than Fair Value and Postponement of Final Determination*, 75 FR 847 (January 6, 2010) ("Preliminary Determination"),

estimated weighted–average antidumping duty margins as listed below *See* section 735(c)(3) of the Act. The "PRC–wide" rate applies to all exporters of subject merchandise not specifically listed below. The weighted–average dumping margins are as follows:

Manufacturer	Exporter	Antidumping Duty Percent Margin
Sinosteel Yantai Steel Grating Co., Ltd.	Sinosteel Yantai Steel Grating Co., Ltd.	136.76
Ningbo Haitian International Co., Ltd.	Ningbo Lihong Steel Grating Co., Ltd.	136.76
Yantai Xinke Steel Structure Co., Ltd.	Yantai Xinke Steel Structure Co., Ltd.	136.76
PRC–wide Entity		145.18

This notice constitutes the antidumping duty order with respect to steel grating from the PRC pursuant to section 736(a) of the Act. Interested parties may contact the Department's Central Records Unit, Room 1117 of the main Commerce building, for copies of an updated list of antidumping duty orders currently in effect.

This order is published in accordance with section 736(a) of the Act and 19 CFR

351.211.

Dated: July 16, 2010.

Ronald K. Lorentzen,

Deputy Assistant Secretary for Import Administration.

[FR Doc. 2010–18105 Filed 7–22–10; 8:45 am]

BILLING CODE 3510–DS–S

DEPARTMENT OF COMMERCE

International Trade Administration

[C–570–948]

Certain Steel Grating from the People's Republic of China: Countervailing Duty Order

AGENCY: Import Administration, International Trade Administration, Department of Commerce

SUMMARY: Based on affirmative final determinations by the Department of Commerce (the Department) and the U.S. International Trade Commission (ITC), the Department is issuing a countervailing duty order on certain steel grating (steel grating) from the People's Republic of China (PRC).

EFFECTIVE DATE: July 23, 2010.

FOR FURTHER INFORMATION CONTACT: Justin Neuman or Milton Koch, AD/CVD Operations, Office 6, Import Administration, International Trade Administration, U.S.Department of Commerce, 14th Street and Constitution Avenue, NW, Washington, DC 20230; telephone: (202) 482–0486, (202) 482–2584, respectively.

SUPPLEMENTARY INFORMATION:

Background

In accordance with sections 705(d) and 777(i)(1) of the Tariff Act of 1930, as amended (the Act), on June 8, 2010, the Department published its affirmative final determination in the countervailing duty investigation of certain steel grating from PRC. *See Certain Steel Grating from the People's Republic of China: Final Affirmative Countervailing Duty Determination*, 75 FR 32362 (June 8, 2010).

On July 13, 2010, the ITC notified the Department of its final determination, pursuant to section 705(d) of the Act, that an industry in the United States is materially injured within the meaning of section 705(b)(1)(A)(i) of the Act by reason of subsidized imports of subject merchandise from the PRC. *See Certain Steel Grating from China*, Investigation Nos. 701–TA–465 and 731–TA–1161 (Final), USITC Publication 4168 (July 2010). Pursuant to section 706(a) of the Act, the Department is publishing a countervailing duty order on the subject merchandise.

Scope of the Order

The products covered by this order are certain steel grating, consisting of two or more pieces of steel, including load–bearing pieces and cross pieces, joined by any assembly process, regardless of: (1) size or shape; (2) method of manufacture; (3) metallurgy (carbon, alloy, or stainless); (4) the profile of the bars; and (5) whether or not they are galvanized, painted, coated, clad or plated. Steel grating is also commonly referred to as "bar grating," although the components may consist of steel other than bars, such as hot–rolled sheet, plate, or wire rod.

The scope of this order excludes expanded metal grating, which is comprised of a single piece or coil of sheet or thin plate steel that has been slit and expanded, and does not involve welding or joining of multiple pieces of steel. The scope of this order also excludes plank type safety grating which is comprised of a single piece or coil of sheet or thin plate steel, typically in thickness of 10 to 18 gauge, that has been pierced and cold formed, and does not involve welding or joining of multiple pieces of steel.

Certain steel grating that is the subject of this order is currently classifiable in the Harmonized Tariff Schedule of the United States (HTSUS) under subheading 7308.90.7000. While the HTSUS subheading is provided for convenience and customs purposes, the written description of the scope of this order is dispositive.

Countervailing Duty Order

On July 13, 2010, the ITC notified the Department of its final determination, pursuant to section 705(d) of the Act, that an industry in the United States is materially injured within the meaning of section 705(b)(1)(A)(i) of the Act as a result of subsidized imports of steel grating from the PRC. As a result of the ITC's final determination, in accordance with section 706(a) of the Act, the Department will direct U.S. Customs and Border Protection (CBP) to assess, upon further instruction by the Department, countervailing duties on all unliquidated entries of steel grating from the PRC entered, or withdrawn from warehouse, for consumption on or after November 3, 2009, the date on which the Department published its preliminary affirmative countervailing duty determination in the **Federal Register**, and before March 3, 2010, the date on which the Department instructed CBP to discontinue the suspension of liquidation in accordance with section 703(d) of the Act. *See Certain Steel Grating from the People's Republic of China: Preliminary Affirmative Countervailing Duty Determination and Alignment of Final Countervailing Duty Determination with Final Antidumping Duty Determination*, 74 FR 56796 (November 3, 2009). Section 703(d) of the Act states that the suspension of liquidation pursuant to a preliminary determination may not remain in effect for more than four months. Accordingly, the Department terminated suspension of liquidation effective March 3, 2010. Entries of steel grating made on or after March 3, 2010, and prior to the date of publication of the ITC's final determination in the **Federal Register**, are not liable for the assessment of countervailing duties.

Reinstitution of Suspension of Liquidation

In accordance with section 706 of the Act, the Department will direct CBP to reinstitute the suspension of liquidation for steel grating from the PRC, effective the date of publication of the ITC's notice of final determination in the **Federal Register**, and to assess, upon further advice by the Department pursuant to section 706(a)(1) of the Act, countervailing duties for each entry of the subject merchandise in an amount based on the net countervailable subsidy rates for the subject merchandise. On or after the date of publication of the ITC's final injury determination in the **Federal Register**, CBP must require, at the same time as importers would normally deposit estimated duties on this merchandise, a cash deposit equal to the rates noted below:

Exporter/Manufacturer	Net Countervailable Subsidy Rate
Ningbo Jiulong Machinery Manufacturing Co., Ltd.	62.46% *ad valorem*
All Others	62.46% *ad valorem*

This notice constitutes the countervailing duty order with respect to steel grating from the PRC pursuant to section 706(a) of the Act. Interested parties may contact the Department's Central Records Unit, Room 1117 of the main Commerce building, for copies of an updated list of countervailing duty orders currently in effect.

This countervailing duty order is issued and published in accordance with sections 705(c)(2), 706(a) and 777(i)(1) of the Act, and 19 CFR 351.211.

Dated: JUly 16, 2010.

Ronald K. Lorentzen,

Deputy Assistant Secretary for Import Administration.

[FR Doc. 2010–18110 Filed 7–22–10; 8:45 am]

BILLING CODE 3510–DS–S

DEPARTMENT OF COMMERCE

National Oceanic and Atmospheric Administration

Evaluation of State Coastal Management Programs and National Estuarine Research Reserves

AGENCY: National Oceanic and Atmospheric Administration (NOAA), Office of Ocean and Coastal Resource Management, National Ocean Service, Commerce.

ACTION: Notice of intent to evaluate and notice of availability of final findings.

SUMMARY: The NOAA Office of Ocean and Coastal Resource Management (OCRM) announces its intent to evaluate the performance of the North Inlet/Winyah Bay (South Carolina) National Estuarine Research Reserve and the Pennsylvania Coastal Resources Management Program.

The National Estuarine Research Reserve evaluation will be conducted pursuant to sections 312 and 315 of the CZMA and regulations at 15 CFR Part 921, Subpart E and Part 923, Subpart L. Evaluation of a National Estuarine Research Reserve requires findings concerning the extent to which a State has met the national objectives, adhered to its Reserve final management plan approved by the Secretary of Commerce, and adhered to the terms of financial assistance awards funded under the CZMA.

The Coastal Zone Management Program evaluation will be conducted pursuant to section 312 of the Coastal Zone Management Act of 1972, as amended (CZMA) and regulations at 15 CFR part 923, subpart L. The CZMA requires continuing review of the performance of States with respect to coastal program implementation. Evaluation of a Coastal Management Program requires findings concerning the extent to which a State has met the national objectives, adhered to its Coastal Management Program document approved by the Secretary of Commerce, and adhered to the terms of financial assistance awards funded under the CZMA.

Each evaluation will include a site visit, consideration of public comments, and consultations with interested Federal, State, and local agencies and members of the public. A public meeting will be held as part of the site visit. When the evaluation is completed, OCRM will place a notice in the **Federal Register** announcing the availability of the Final Evaluation Findings. Notice is hereby given of the dates of the site visits for the listed evaluations, and the dates, local times, and locations of the public meetings during the site visits.

Dates and Times: The North Inlet/Winyah Bay (South Carolina) National Estuarine Research Reserve evaluation site visit will be held September 13–17, 2010. One public meeting will be held during the week. The public meeting will be held on Wednesday, September 15, 2010, at 6 p.m. at the Hobcaw Barony Discovery Center, 22 Hobcaw Road, Georgetown, South Carolina.

The Pennsylvania Coastal Resources Management Program evaluation site visit will be held September 13–17, 2010. One public meeting will be held during the week. The public meeting will be held on Wednesday, September 15, 2010, at 6:30 p.m. at the Tom Ridge Environmental Center at Presque Isle, Room 112, 301 Peninsula Drive, Erie, Pennsylvania.

ADDRESSES: Copies of the States' most recent performance reports, as well as OCRM's evaluation notification and supplemental information request letters to the State, are available upon request from OCRM. Written comments from interested parties regarding these Programs are encouraged and will be accepted until 15 days after the public meeting held for a Program. Please direct written comments to Kate Barba, Chief, National Policy and Evaluation Division, Office of Ocean and Coastal Resource Management, NOS/NOAA, 1305 East-West Highway, 10th Floor, N/ORM7, Silver Spring, Maryland 20910.

SUPPLEMENTARY INFORMATION: Notice is hereby given of the availability of the final evaluation findings for the California, Mississippi, and Maine Coastal Management Programs (CMPs) and the Old Woman Creek (Ohio) National Estuarine Research Reserve (NERR). Sections 312 and 315 of the Coastal Zone Management Act of 1972 (CZMA), as amended, require a continuing review of the performance of coastal States with respect to approval of CMPs and the operation and management of NERRs.

The States of California, Mississippi, and Maine were found to be implementing and enforcing their Federally approved coastal management programs, addressing the national coastal management objectives identified in CZMA Section 303(2)(A)–(K), and adhering to the programmatic terms of their financial assistance awards. The Old Woman Creek NERR was found to be adhering to programmatic requirements of the NERR System.

Copies of these final evaluation findings may be obtained upon written request from: Kate Barba, Chief, National Policy and Evaluation Division, Office of Ocean and Coastal Resource Management, NOS/NOAA, 1305 East-West Highway, 10th Floor, N/ORM7, Silver Spring, Maryland 20910, or *Kate.Barba@noaa.gov.*

FOR FURTHER INFORMATION CONTACT: Kate Barba, Chief, National Policy and Evaluation Division, Office of Ocean and Coastal Resource Management, NOS/NOAA, 1305 East-West Highway, 10th Floor, N/ORM7, Silver Spring, Maryland 20910, (301) 563–1182.

Federal Domestic Assistance Catalog 11.419, Coastal Zone Management Program Administration

Dated: July 14, 2010.

Donna Wieting,

Director, Office of Ocean and Coastal Resource Management, National Ocean Service, National Oceanic and Atmospheric Administration.

[FR Doc. 2010–18108 Filed 7–22–10; 8:45 am]

BILLING CODE 3510–08–P

DEPARTMENT OF COMMERCE

International Trade Administration

[A–570–878]

Saccharin From the People's Republic of China: Final Results of the 2008–2009 Antidumping Duty Administrative Review

AGENCY: Import Administration, International Trade Administration, Department of Commerce.

SUMMARY: On March 22, 2010, the Department of Commerce ("Department") published its *Preliminary Results* for the July 1, 2008, through June 30, 2009, administrative review of saccharin from the People's Republic of China ("PRC").[1] We invited interested parties to comment on our *Preliminary Results,* but no parties submitted comments. Therefore, the *Preliminary Results* are hereby adopted as the final results.

DATES: *Effective Date:* July 23, 2010.

FOR FURTHER INFORMATION CONTACT: Brandon Petelin or Charles Riggle, AD/CVD Operations, Office 8, Import Administration, International Trade Administration, U.S. Department of Commerce, 14th Street and Constitution Avenue, NW., Washington, DC 20230; telephone: (202) 482–8173 and (202) 482–0650, respectively.

SUPPLEMENTARY INFORMATION:

Background

On March 22, 2010, the Department published its *Preliminary Results* of the review of the antidumping order on saccharin from the PRC covering the period July 1, 2008, through June 30, 2009. For the *Preliminary Results,* because Kaifeng Xinhua Fine Chemical Factory ("Kaifeng") did not respond to the Department's questionnaire, we were unable to determine if Kaifeng was eligible for a separate rate.[2] Further, in accordance with sections 776(a)(2)(A) and (B) of the Tariff Act of 1930, as amended ("Act"), because the PRC-entity (including Kaifeng) failed to cooperate to the best of its ability by not responding to our questionnaire, we found it appropriate to use adverse facts available.[3] Thus, the Department preliminarily determined that Kaifeng did not qualify for a separate rate and instead was part of the PRC entity.[4] No parties commented on the *Preliminary Results.*

Scope of the Order

The product covered by this antidumping duty order is saccharin. Saccharin is defined as a non-nutritive sweetener used in beverages and foods, personal care products such as toothpaste, table top sweeteners, and animal feeds. It is also used in metalworking fluids. There are four primary chemical compositions of saccharin: (1) Sodium saccharin (American Chemical Society Chemical Abstract Service ("CAS") Registry 128–44–9); (2) calcium saccharin (CAS Registry 6485–34–3); (3) acid (or insoluble) saccharin (CAS Registry 81–07–2); and (4) research grade saccharin. Most of the U.S.-produced and imported grades of saccharin from the PRC are sodium and calcium saccharin, which are available in granular, powder, spray-dried powder, and liquid forms. The merchandise subject to this order is currently classifiable under subheading 2925.11.00 of the *Harmonized Tariff Schedule of the United States* ("HTSUS") and includes all types of saccharin imported under this HTSUS subheading, including research and specialized grades. Although the HTSUS subheading is provided for convenience and customs purposes, the Department's written description of the scope of this order remains dispositive.

Analysis of Comments Received

Because no parties commented on the *Preliminary Results,* we have adopted the *Preliminary Results* as the final results, including the margin determined therein.[5]

Final Results of Review

We find that the following weighted-average dumping margin exists for the period July 1, 2008, through June 30, 2009:

Manufacturer/Exporter	Margin (Percent)
PRC-wide Entity*	329.94 [6]

*The PRC-entity includes Kaifeng Xinhua Fine Chemical Factory.

[6] *See Notice of Final Determination of Sales at Less Than Fair Value: Saccharin From the People's Republic of China,* 68 FR 27530 (May 30, 2003) ("*LTFV Final Determination*"); as amended by *Notice of Amended Final Determination of Sales at Less Than Fair Value,* 68 FR 35383 (June 13, 2003) ("The PRC-wide rate of 329.94 percent * * * is the correct PRC-wide rate, rather than the rate of 329.33 percent published in the *LTFV Final Determination.*"); *see also Notice of Antidumping Duty Order: Saccharin From the People's Republic of China,* 68 FR 40906 (July 9, 2003) (establishing 329.94 percent as the PRC-wide rate).

Assessment Rates

The Department has determined, and U.S. Customs and Border Protection ("CBP") shall assess antidumping duties on all appropriate entries covered by this review. The Department intends to issue assessment instructions to CBP 15 days after the publication date of the final results of this review.

Cash Deposit Requirements

The following deposit requirements will be effective upon publication of this notice of final results of administrative review for all shipments of subject merchandise entered, or withdrawn from warehouse, for consumption on or after the date of publication, as provided by section 751(a)(2)(C) of the Act: (1) For the PRC-wide entity (which includes Kaifeng), the cash deposit rate will be 329.94 percent; (2) for previously investigated or reviewed PRC and non-PRC exporters not listed above that have separate rates, the cash deposit rate will continue to be the exporter-specific rate published for the most recent period; (3) for all PRC exporters of subject merchandise that have not been found to be entitled to a separate rate, the cash deposit rate will be the PRC-wide rate of 329.94 percent; and (4) for all non-PRC exporters of subject merchandise which have not received their own rate, the cash deposit rate will be the rate applicable to the PRC exporters that supplied that non-PRC exporter. These deposit requirements shall remain in effect until further notice.

Notification of Interested Parties

This notice also serves as a final reminder to importers of their responsibility under 19 CFR 351.402(f)(2) to file a certificate regarding the reimbursement of

[1] *See Saccharin From the People's Republic of China: Preliminary Results of the 2008–2009 Antidumping Duty Administrative Review,* 75 FR 13495 (March 22, 2010) ("*Preliminary Results*").

[2] On October 14, 2009, the Department confirmed that Kaifeng signed for and received our mailing of the antidumping duty questionnaire. On January 6, 2009, the Department placed the FedEx International Air Waybill receipt and delivery confirmation for the questionnaire issued to Kaifeng on the record of this administrative review to confirm that we mailed, and Kaifeng signed for and received, the questionnaire.

[3] *See Preliminary Results.*

[4] *See id.*

[5] *See id.*

antidumping duties prior to liquidation of the relevant entries during this review period. Failure to comply with this requirement could result in the Secretary's presumption that reimbursement of the antidumping duties occurred and the subsequent assessment of double antidumping duties. This notice also serves as a reminder to parties subject to administrative protective orders ("APOs") of their responsibility concerning the return or destruction of proprietary information disclosed under APO in accordance with 19 CFR 351.305, which continues to govern business proprietary information in this segment of the proceeding. Timely written notification of the return/destruction of APO materials or conversion to judicial protective order is hereby requested. Failure to comply with the regulations and terms of an APO is a violation that is subject to sanction.

This notice of the final results of this administrative review is issued and published in accordance with sections 751(a)(1) and 777(i)(1) of the Act.

Dated: July 19, 2010.

Ronald K. Lorentzen,

Deputy Assistant Secretary for Import Administration.

[FR Doc. 2010–18103 Filed 7–22–10; 8:45 am]

BILLING CODE 3510–DS–P

DEPARTMENT OF COMMERCE

National Oceanic and Atmospheric Administration

RIN 0648–XX58

Fisheries of the Exclusive Economic Zone Off Alaska; Bering Sea and Aleutian Islands Crab Rationalization Cost Recovery Program

AGENCY: National Marine Fisheries Service (NMFS), National Oceanic and Atmospheric Administration (NOAA), Commerce.

ACTION: Notification of fee percentage.

SUMMARY: NMFS publishes a notification of a 2.67–percent fee for cost recovery under the Bering Sea and Aleutian Islands Crab Rationalization Program. This action is intended to provide holders of crab allocations with the fee percentage for the 2010/2011 crab fishing year so they can calculate the required payment for cost recovery fees that must be submitted by July 31, 2011.

DATES: The Crab Rationalization Program Registered Crab Receiver permit holder is responsible for submitting the fee liability payment to NMFS on or before July 31, 2011.

FOR FURTHER INFORMATION CONTACT: Gabrielle Aberle or Gretchen Harrington, 907–586–7228.

SUPPLEMENTARY INFORMATION:

Background

NMFS Alaska Region administers the Bering Sea and Aleutian Islands Crab Rationalization Program (Program) in the North Pacific. Fishing under the Program began on August 15, 2005. Regulations implementing the Program are set forth at 50 CFR part 680.

The Program is a limited access system authorized by section 313(j) of the Magnuson-Stevens Fishery Conservation and Management Act (Magnuson-Stevens Act). The Program includes a cost recovery provision to collect fees to recover the actual costs directly related to the management, data collection, and enforcement of the Program. NMFS developed the cost recovery provision to conform to statutory requirements and to partially reimburse the agency for the unique added costs of management, data collection, and enforcement of the Program. Section 313(j) of the Magnuson-Stevens Act provided supplementary authority to section 304(d)(2)(A) and additional detail for cost recovery provisions specific to the Program. The cost recovery provision allows collection of 133 percent of the actual management, data collection, and enforcement costs up to three percent of the ex-vessel value of crab harvested under the Program. Additionally, section 313(j) requires the harvesting and processing sectors to each pay half the cost recovery fees. Catcher/processor quota share holders are required to pay the full fee percentage for crab processed at sea.

A crab allocation holder generally incurs a cost recovery fee liability for every pound of crab landed. The crab allocations include Individual Fishing Quota, Crew Individual Fishing Quota, Individual Processing Quota, Community Development Quota, and the Adak community allocation. The Registered Crab Receiver (RCR) permit holder must collect the fee liability from the crab allocation holder who is landing crab. Additionally, the RCR permit holder must collect his or her own fee liability for all crab delivered to the RCR. The RCR permit holder is responsible for submitting this payment to NMFS on or before the due date of July 31, in the year following the crab fishing year in which landings of crab were made.

The dollar amount of the fee due is determined by multiplying the fee percentage (not to exceed three percent) by the ex-vessel value of crab debited from the allocation. Specific details on the Program's cost recovery provision may be found in the implementing regulations set forth at 50 CFR 680.44.

Fee Percentage

Each year, NMFS calculates and publishes in the **Federal Register** the fee percentage according to the factors and methodology described in Federal regulations at § 680.44(c)(2). The formula for determining the fee percentage is the "direct program costs" divided by "value of the fishery," where "direct program costs" are the direct program costs for the Program for the previous fiscal year, and "value of the fishery" is the ex-vessel value of the catch subject to the crab cost recovery fee liability for the current year. Fee collections for any given year may be less than, or greater than, the actual costs and fishery value for that year, because, by regulation, the fee percentage is established in the first quarter of a crab fishery year based on the fishery value and the costs of the prior year.

Using this fee percentage formula, the estimated percentage of costs to value for the 2009/2010 fishery was 2.67 percent. Therefore, the fee percentage will be 2.67 percent for the 2010/2011 crab fishing year.

Authority: 16 U.S.C. 1862; Pub. L. 109–241; Pub. L. 109–479.

Dated: July 20, 2010.

Carrie Selberg,

Acting Director, Office of Sustainable Fisheries, National Marine Fisheries Service.

[FR Doc. 2010–18133 Filed 7–22–10; 8:45 am]

BILLING CODE 3510–22–S

DEPARTMENT OF COMMERCE

National Oceanic and Atmospheric Administration

RIN 0648–XX75

Gulf of Mexico Fishery Management Council; Public Meeting

AGENCY: National Marine Fisheries Service (NMFS), National Oceanic and Atmospheric Administration (NOAA), Commerce.

ACTION: Notice of a public meeting.

SUMMARY: The Gulf of Mexico Fishery Management Council will convene a meeting of the Ad Hoc Data Collection Advisory Panel.

DATES: The meeting will convene at 9 a.m. on Tuesday, August 10, 2010 and conclude by 4:30 p.m.

ADDRESSES: The meeting will be held at the Gulf of Mexico Fishery Management Council, 2203 North Lois Avenue, Suite 1100, Tampa, FL 33607; telephone: (813) 348–1630.

Council address: Gulf of Mexico Fishery Management Council, 2203 N. Lois Avenue, Suite 1100, Tampa, FL 33607.

FOR FURTHER INFORMATION CONTACT: Dr. John Froeschke, Fishery Biologist; Gulf of Mexico Fishery Management Council; telephone: (813) 348–1630 x235.

SUPPLEMENTARY INFORMATION: The Ad Hoc Data Collection Advisory Panel will meet to discuss the development of general criteria for electronic reporting systems to improve accuracy and timeliness of data collected in Gulf of Mexico fisheries. The Ad Hoc Data Collection Advisory Panel will review previous Council motions regarding electronic reporting for dealers and the for-hire fleet, and resources needed for full implementation. The Advisory Panel will also discuss perspectives on goals, objectives, and expectations for recreational data collection programs. Presentations will be made to review current data collection programs and evaluate the potential for use in Gulf fisheries. The Advisory Panel will review and discussing recommendations for recreational data collection systems for private anglers, including the need to balance timeliness and accuracy with cost and feasibility. The meeting will conclude with draft recommendations for development and possible implementation of electronic data collection systems for private anglers. The recommendations made by Ad Hoc Data Collection Advisory Panel will be presented to the Council at its August 16 - 20, 2010 meeting in Pensacola, FL.

Copies of the agenda and other related materials can be obtained by calling (813) 348–1630.

Although other non-emergency issues not on the agenda may come before the Advisory Panel for discussion, in accordance with the Magnuson-Stevens Fishery Conservation and Management Act, those issues may not be the subject of formal action during this meeting. Actions of the Advisory Panel will be restricted to those issues specifically identified in the agenda and any issues arising after publication of this notice that require emergency action under Section 305(c) of the Magnuson-Stevens Fishery Conservation and Management Act, provided the public has been notified of the Council's intent to take action to address the emergency.

Special Accommodations

The meeting is physically accessible to people with disabilities. Requests for sign language interpretation or other auxiliary aids should be directed to Tina O'Hern at the Council (see **ADDRESSES**) at least 5 working days prior to the meeting.

Dated: July 20, 2010.

Tracey L. Thompson,

Acting Director, Office of Sustainable Fisheries, National Marine Fisheries Service.

[FR Doc. 2010–18040 Filed 7–22–10; 8:45 am]

BILLING CODE 3510–22–S

DEPARTMENT OF COMMERCE

National Oceanic and Atmospheric Administration

RIN 0648–XX76

Gulf of Mexico Fishery Management Council; Public Meeting

AGENCY: National Marine Fisheries Service (NMFS), National Oceanic and Atmospheric Administration (NOAA), Commerce.

ACTION: Notice of a public meeting.

SUMMARY: The Gulf of Mexico Fishery Management Council will convene a meeting of the Vessel Monitoring System Advisory Panel.

DATES: The meeting will convene at 9 a.m. on Tuesday, August 11, 2010 and conclude by 3:30 p.m.

ADDRESSES: The meeting will be held at the Gulf of Mexico Fishery Management Council, 2203 North Lois Avenue, Suite 1100, Tampa, FL 33607; telephone: (813) 348–1630.

Council address: Gulf of Mexico Fishery Management Council, 2203 N. Lois Avenue, Suite 1100, Tampa, FL 33607.

FOR FURTHER INFORMATION CONTACT: Dr. John Froeschke, Fishery Biologist; Gulf of Mexico Fishery Management Council; telephone: (813) 348–1630 x235.

SUPPLEMENTARY INFORMATION: The Vessel Monitoring System Advisory Panel will meet to discuss operation, design, agency usage of vessel monitoring systems (VMS), and resulting data from these systems. The meeting will begin with the election of a VMS Advisory Panel Chair and co-Chair. The VMS Advisory Panel will review technical issues with VMS and consider potential solutions. The Advisory Panel will also consider current and future VMS design to determine if existing systems are adequate in terms of ease-of-use, accuracy, and cost-effectiveness. The VMS Advisory panel will also discuss issues pertaining to data availability and distribution to ensure that VMS data are used appropriately and that the confidentially is preserved where appropriate. The meeting will conclude with a discussion of the potential role of VMS for verification of seafood origin. The meeting will conclude with draft recommendations presented to the Council at its August 19 - 19, 2010 meeting in Pensacola, FL.

Copies of the agenda and other related materials can be obtained by calling (813) 348–1630.

Although other non-emergency issues not on the agenda may come before the Advisory Panel for discussion, in accordance with the Magnuson-Stevens Fishery Conservation and Management Act, those issues may not be the subject of formal action during this meeting. Actions of the Advisory Panel will be restricted to those issues specifically identified in the agenda and any issues arising after publication of this notice that require emergency action under Section 305(c) of the Magnuson-Stevens Fishery Conservation and Management Act, provided the public has been notified of the Council's intent to take action to address the emergency.

Special Accommodations

The meeting is physically accessible to people with disabilities. Requests for sign language interpretation or other auxiliary aids should be directed to Tina O'Hern at the Council (see **ADDRESSES**) at least 5 working days prior to the meeting.

Dated: July 20, 2010.

Tracey L. Thompson,

Acting Director, Office of Sustainable Fisheries, National Marine Fisheries Service.

[FR Doc. 2010–18041 Filed 7–22–10; 8:45 am]

BILLING CODE 3510–22–S

DEPARTMENT OF COMMERCE

National Oceanic and Atmospheric Administration

New England Fishery Management Council; Public Meeting

AGENCY: National Marine Fisheries Service (NMFS), National Oceanic and Atmospheric Administration (NOAA), Commerce.

ACTION: Notice; public meeting.

SUMMARY: The New England Fishery Management Council (Council) is scheduling a public meeting of its Whiting Advisory Panel in August, 2010 to consider actions affecting New England fisheries in the exclusive

economic zone (EEZ).

Recommendations from this group will be brought to the full Council for formal consideration and action, if appropriate.

DATES: The meeting will be held on Friday, August 6, 2010 at 9 a.m.

ADDRESSES:

Meeting address: The meeting will be held at The School for Marine Science and Technology—AT&T Building, 200 Mill Road, Fairhaven, MA 02719: telephone: (508) 999–8193; fax: (508) 999–8197.

Council address: New England Fishery Management Council, 50 Water Street, Mill 2, Newburyport, MA 01950.

FOR FURTHER INFORMATION CONTACT: Paul J. Howard, Executive Director, New England Fishery Management Council; telephone: (978) 465–0492.

SUPPLEMENTARY INFORMATION: The Council will hold a meeting for Whiting Advisors, stakeholders, and interested parties to provide input on fishery data that will be used to assess the status of and estimate biological reference points for silver hake, offshore hake, and red hake. The Council and NMFS is seeking advice about problems and potential solutions using data derived from reported landings, vessel trip reports, sea sampling and discard estimates, fishing effort, and research vessel surveys. A brief overview of these data will be presented by the lead assessment scientists.

This meeting is physically accessible to people with disabilities. Requests for sign language interpretation or other auxiliary aids should be directed to Paul J. Howard, Executive Director, at 978–465–0492, at least 5 days prior to the meeting date.

Authority: 16 U.S.C. 1801 *et seq.*

Dated: July 20, 2010.

Tracey L. Thompson,

Acting Director, Office of Sustainable Fisheries, National Marine Fisheries Service.

[FR Doc. 2010–18122 Filed 7–22–10; 8:45 am]

BILLING CODE 3510–22–P

DEPARTMENT OF COMMERCE

National Oceanic and Atmospheric Administration

RIN 0648–XX74

New England Fishery Management Council; Public Meeting

AGENCY: National Marine Fisheries Service (NMFS), National Oceanic and Atmospheric Administration (NOAA), Commerce.

ACTION: Notice; public meeting.

SUMMARY: The New England Fishery Management Council's (Council) Joint Groundfish/Scallop Committee will meet to consider actions affecting New England fisheries in the exclusive economic zone (EEZ).

DATES: The meeting will be held on August 10, 2010 at 9 a.m.

ADDRESSES: The meeting will be held at the Four Points Sheraton, 407 Squire Road, Revere, MA 02151; telephone: (781) 284–7200; fax: (781) 289–3176.

Council address: New England Fishery Management Council, 50 Water Street, Mill 2, Newburyport, MA 01950.

FOR FURTHER INFORMATION CONTACT: Paul J. Howard, Executive Director, New England Fishery Management Council; telephone: (978) 465–0492.

SUPPLEMENTARY INFORMATION: The items of discussion in the committee's agenda are as follows:

The Committee will continue development of a joint Northeast Multispecies Fishery and Scallop Fishery management action that will be developed to meet two objectives: (1) to develop measures for the Northeast multispecies and scallop fisheries that facilitates the harvest of optimum yield from the two fisheries by addressing the potential constraints of the groundfish stock allocations; and (2) to develop measures to reduce catch of groundfish in the scallop fishery by adopting measures that would allow benefits for the fishery from reduction in groundfish catch. The Committee will consider recommendations from the Joint Groundfish/Scallop Advisory panel. Options the Advisory Panel will recommend include, but are not limited to, such measures as developing management options to remove the yellowtail flounder catch cap that applies to the Georges Bank access areas, allowing research programs in the closed areas to determine the best times for scallop access, allowing the formation of voluntary bycatch cooperatives for the purpose of developing gear modifications that reduce groundfish bycatch, allocating the scallop fishery 100 percent of the yellowtail flounder it is predicted it will catch, and defining the General Category IFQ fishery as a separate sub-component of the yellowtail flounder annual catch limit. The Committee will consider these and other recommendations of the Advisory Panel and may forward these suggestions, as well as others developed by the Committee, to the Council for consideration. Other business may be discussed.

Although non-emergency issues not contained in this agenda may come before this group for discussion, those issues may not be the subject of formal action during this meeting. Action will be restricted to those issues specifically identified in this notice and any issues arising after publication of this notice that require emergency action under section 305(c) of the Magnuson-Stevens Fishery Conservation and Management Act, provided the public has been notified of the Council's intent to take final action to address the emergency.

Special Accommodations

This meeting is physically accessible to people with disabilities. Requests for sign language interpretation or other auxiliary aids should be directed to Paul J. Howard (see **ADDRESSES**) at least 5 days prior to the meeting date.

Authority: 16 U.S.C. 1801 *et seq.*

Dated: July 20, 2010.

Tracey L. Thompson,

Acting Director, Office of Sustainable Fisheries, National Marine Fisheries Service.

[FR Doc. 2010–18039 Filed 7–22–10; 8:45 am]

BILLING CODE 3510–22–S

DEPARTMENT OF COMMERCE

International Trade Administration

[A–570–909]

Certain Steel Nails from the Peoples' Republic of China: Notice of Partial Rescission of the First Antidumping Duty Administrative Review

AGENCY: Import Administration, International Trade Administration, Department of Commerce.

EFFECTIVE DATE: July 23, 2010.

FOR FURTHER INFORMATION CONTACT: Emeka Chukwudebe or Matthew Renkey, Office 9, AD/CVD Operations, Import Administration, International Trade Administration, U.S. Department of Commerce, 14th Street and Constitution Avenue, NW., Washington, DC 20230; telephone: (202) 482–0219 and (202) 482–2312, respectively.

SUPPLEMENTARY INFORMATION:

Background

On August 3, 2009, the Department published a notice of opportunity to request an administrative review on the antidumping order on certain steel nails from the People's Republic of China ("PRC") for the period of review ("POR") January 23, 2008, through July 31, 2009. See Antidumping or Countervailing Duty Order, Finding, or Suspended Investigation; Opportunity To Request Administrative Review, 74 FR 38397 (August 3, 2009). Based upon requests for review from various parties, on September 22, 2009, the Department

initiated the first antidumping duty administrative review on certain steel nails from the PRC, covering 158 companies. See Initiation of Antidumping and Countervailing Duty Administrative Reviews and Request for Revocation in Part, 74 FR 48224 (September 22, 2009) ("Initiation Notice"). Due to withdrawals of request for review, we are rescinding this administrative review with respect to 31 companies.[1]

Partial Rescission of Review

The applicable regulation, 19 CFR 351.213(d)(1), states that if a party that requested an administrative review withdraws the request within 90 days of the publication of the notice of initiation of the requested review, the Secretary will rescind the review. The regulation further states that the Secretary may extend the deadline if it is reasonable to do so. On January 26, 2010, Petitioner[2] requested an extension of the deadline for withdrawal of administrative review. On February 16, 2010, the Department extended the deadline for withdrawal of administrative review requests by 10 days.[3] Petitioner withdrew its review request with respect to 31 exporters of subject merchandise within the deadline. Furthermore, respondent Tianjin Xiantong Material & Trade Co., Ltd. ("Tianjin Xiantong") also withdrew its request for a review within the deadline.

Assessment Rates

The Department will instruct U.S. Customs and Border Protection "CBP") to assess antidumping duties on all appropriate entries. For those companies for which this review has been rescinded and which have a separate rate from a prior segment of this proceeding, antidumping duties shall be assessed at rates equal to the cash deposit of estimated antidumping duties required at the time of entry, or withdrawal from warehouse, for consumption, in accordance with 19 CFR 351.212(c)(2). Accordingly, the Department intends to issue appropriate assessment instructions directly to CBP 15 days after publication of this notice for the following companies: 1) Beijing Daruixing Nails Products Co., Ltd.; 2) Chongqing Hybest Tools Group Co., Ltd.; 3) Guangdong Foreign Trade Import &Export Corporation; 4) Hebei Cangzhou New Century Foreign Trade Co., Ltd.; 5) Jining Huarong Hardware Products Co., Ltd.; 6) Mingguang Abundant Hardware Products Co., Ltd.; 7) PT Enterprise Inc.; 8) SDC International Australia Pty., Ltd.; 9) Shandong Oriental Cherry Hardware Group Co., Ltd.; 10) Shandong Oriental Cherry Hardware Import and Export Co., Ltd.; 11) Shanghai Seti Enterprise International Co., Ltd.; 12) Shanghai Yueda Nails Industry Co., Ltd.; 13) Shanxi Hairui Trade Co., Ltd.; 14) Shanxi Pioneer Hardware Industrial Co.. Ltd.; 15) Shanxi Tianli Industries Co.; 16) Shanxi Yuci Broad Wire Products Co., Ltd.; 17) S–mart (Tianjin) Technology Development Co., Ltd.; 18) Suntec Industries Co., Ltd.; 19) Tianjin Lianda Group Co., Ltd.; 20) Tianjin Universal Machinery Imp &Exp Corporation; 21) Union Enterprise (Kunshan) Co., Ltd.; 22) Wuhu Xin Lan De Industrial Co., Ltd.; 23) Xi'an Metals & Minerals Import and Export Co., Ltd.; 24) Xuzhou CIP International Group Co., Ltd.; 25) Zhaoqing Harvest Nails Co., Ltd.; 26) Suzhou Xingya Nail Co., Ltd.; 27) Beijing Hong Sheng Metal Products Co., Ltd.; 28) Beijing Hongsheng Metal Products Co., Ltd.[4]; and 29) Tianjin Xiantong. This administrative review will continue with respect to the remaining companies in the *Initiation Notice*.

The Department cannot order liquidation for companies which, although they are no longer under review as a separate entity, may still be under review as part of the PRC–wide entity. In this case, the Department cannot order liquidation for certain companies that have not received a separate rate, as an exporter, from the prior investigation. *See Certain Steel Nails from the People's Republic of China: Final Determination of Sales at Less Than Fair Value and Partial Affirmative Determination of Critical Circumstances*, 73 FR 33977 (June 16, 2008). Therefore, the Department cannot, at this time, order liquidation of entries for the following companies: 1) Qingdao Jisco Co., Ltd.; and 2) Qingdao Koram Steel Co., Ltd. The Department intends to issue liquidation instructions for the PRC–wide entity 15 days after publication of the final results of this review.

Notification to Importers

This notice serves as a final reminder to importers for whom this review is being rescinded, as of the publication date of this notice, of their responsibility under 19 CFR 351.402(f)(2) to file a certificate regarding the reimbursement of antidumping duties prior to liquidation of the relevant entries during this review period. Failure to comply with this requirement could result in the Secretary's presumption that reimbursement of the antidumping duties occurred and the subsequent assessment of double antidumping duties.

This notice is issued and published in accordance with section 777(i)(1) of the Tariff Act of 1930, as amended, and 19 CFR 351.213(d)(4).

Dated: June 30, 2010.

John M. Andersen,

Acting Deputy Assistant Secretary for Antidumping and Countervailing Duty Operations.

[FR Doc. 2010–18107 Filed 7–22–10; 8:45 am]

BILLING CODE 3510–DS–S

[1] These companies include: 1) Beijing Daruixing Nails Products Co., Ltd.; 2) Beijing Hong Sheng Metal Products Co., Ltd.; 3) Beijing Hongsheng Metal Products Co., Ltd.; 4) Chongqing Hybest Tools Group Co., Ltd.; 5) Guangdong Foreign Trade Import & Export Corporation; 6) Hebei Cangzhou New Century Foreign Trade Co., Ltd.; 7) Jining Huarong Hardware Products Co., Ltd.; 8) Mingguang Abundant Hardware Products Co., Ltd.; 9) PT Enterprise Inc.; 10) Qingdao Jisco Co., Ltd.; 11) Qingdao Koram Steel Co., Ltd.; 12) SDC International Australia Pty., Ltd.; 13) Shandong Oriental Cherry Hardware Group Co., Ltd.; 14) Shandong Oriental Cherry Hardware Import and Export Co., Ltd.; 15) Shanghai Seti Enterprise International Co., Ltd.; 16) Shanghai Yueda Nails Industry Co., Ltd.; 17) Shanxi Hairui Trade Co., Ltd.; 18) Shanxi Pioneer Hardware Industrial Co.. Ltd.; 19) Shanxi Tianli Industries Co.; 20) Shanxi Yuci Broad Wire Products Co., Ltd.; 21) S–mart (Tianjin) Technology Development Co., Ltd.; 22) Suntec Industries Co., Ltd.; 23) Suzhou Xingya Nail Co., Ltd.; 24) Tianjin Lianda Group Co., Ltd.; 25) Tianjin Universal Machinery Imp &Exp Corporation; 26) Union Enterprise (Kunshan) Co., Ltd.; 27) Wuhu Xin Lan De Industrial Co., Ltd.; 28) Xi'an Metals & Minerals Import and Export Co., Ltd.; 29) Xuzhou CIP International Group Co., Ltd.; 30) Zhaoqing Harvest Nails Co., Ltd.; and 31) Tianjin Xiantong.

[2] Mid Continent Nail Corporation ("Petitioner).

[3] *See* Certain Steel Nails from the People's Republic of China: Extension of the Deadline for Withdrawal of Administrative Review Requests, dated February 16, 2010 ("Extension Letter").

[4] Beijing Hong Sheng Metal Products Co., Ltd. and Beijing Hongsheng Metal Products Co., Ltd. appear to be slight variations of the name for a single company. Beijing Hong Sheng Metal Products Co., Ltd. received a separate rate as a producer/exporter in the original investigation, and Beijing Hongsheng Metal Products Co., Ltd. was the producer in a combination rate with the exporter Hebei Cangzhou New Century Foreign Trade Co., Ltd., for which this review is also being rescinded. As such, the Department is rescinding the review for both variations of the name.

DEPARTMENT OF COMMERCE

National Oceanic and Atmospheric Administration

RIN 0648–XX69

Marine Mammals; File Nos. 10018, 13846, 14451, 14585, 14599, 14122, 14296, and 14353

AGENCY: National Marine Fisheries Service (NMFS), National Oceanic and

Atmospheric Administration (NOAA), Commerce.

ACTION: Notice; issuance of permits.

SUMMARY: Notice is hereby given that NMFS has issued seven permits and one permit amendment to conduct research on marine mammals. See **SUPPLEMENTARY INFORMATION** for additional information regarding permittees.

ADDRESSES: The permits and related documents are available for review upon written request or by appointment in the following offices: See SUPPLEMENTARY INFORMATION.

FOR FURTHER INFORMATION CONTACT: The following Analysts at (301)713–2289: For File No. 10018: Carrie Hubard or Kristy Beard; File No. 13846: Amy Hapeman or Kristy Beard; File No. 14451: Kate Swails or Kristy Beard; File No. 14585: Amy Hapeman or Kristy Beard; File No. 14599: Amy Sloan or Kristy Beard; File No. 14122: Amy Sloan or Kristy Beard; File No. 14296: Kristy Beard or Jennifer Skidmore; File No. 14353: Carrie Hubard or Kristy Beard.

SUPPLEMENTARY INFORMATION: On November 12, 2009, notice was published in the **Federal Register** (74 FR 58243) that requests for permits and an amendment to a permit to conduct scientific research on marine mammals had been submitted by the above-named applicants. The requested permits and amendment have been issued under the authority of the Marine Mammal Protection Act of 1972, as amended (16 U.S.C. 1361 *et seq.*), the regulations governing the taking and importing of marine mammals (50 CFR part 216), the Endangered Species Act of 1973, as amended (ESA; 16 U.S.C. 1531 *et seq.*), and the regulations governing the taking, importing, and exporting of endangered and threatened species (50 CFR parts 222–226). The following summarizes each permit.

Rachel Cartwright, Ph.D. [File No. 10018], Keiki Kohola Project, 5277 West Wooley Road, Oxnard, CA 93035, was issued an amendment to Permit No. 10018, originally issued on June 18, 2008 (73 FR 36042). Permit No. 10018 authorized Dr. Cartwright to conduct humpback whale (*Megaptera novaeangliae*) research, consisting of photo-identification, focal follows, underwater observations, and collection of sloughed skin, in Hawaiian waters. This amendment, Permit No. 10018–01, authorizes the conduct of similar research in Alaskan waters from May through September each year. Field work will be based out of Kake, Alaska and focused primarily in Chatham Straits, Frederick Sound, Sumner Strait, Lynn Canal and Icy Strait. Humpback whales of all ages, including calves, will be harassed during surveys and the associated photo-identification, passive acoustics, and behavioral observations. Four other species of cetaceans (killer whales (*Orcinus orca*), Pacific white-sided dolphins (*Lagenorhynchus obliquidens*), and harbor (*Phocoena phocoena*) and Dall's porpoises (*Phocoenoides dalli*)) may be incidentally harassed during research. Observed killer whales will be photographed for identification purposes. The amended permit expires on June 30, 2013.

Jim Darling, Ph.D. [File No. 13846], Whale Trust, P.O. Box 384, Tofino, BC V0R2Z0, Canada, was issued a five-year permit to study humpback whales in Hawaii (primarily off west Maui) and humpback and Eastern gray (*Eschrichtius robustus*) whales along the coastlines of Washington and Alaska. Researchers will conduct photo-identification, passive acoustic recording, behavioral observation (by vessel, underwater and aerial), video-recording, collection of sloughed skin, photogrammetry, biopsy sampling, playback experiments, and/or suction-cup and implant tagging of target whales. Whales of all ages will be harassed during surveys with the exceptions that only juvenile and adult humpbacks will be biopsy sampled and only adult humpbacks will be tagged. In Hawaii, spinner (*Stenella longirostris*), pantropical spotted (*S. attenuata*), and bottlenose dolphins (*Turisiops truncatus*) and false killer whales (*Pseudorca crassidens*) may be incidentally harassed during research. Killer whales and Steller sea lions (Eumetopias jubatus) may be incidentally harassed in Washington or Alaskan waters during research.

Joseph Mobley, Jr. [File No. 14451], University of Hawaii at Manoa, 2528 McCarthy Mall, Honolulu, HI 96816, was issued a five-year permit to study cetaceans off the east and west coast of the United States, Hawaii, Alaska, Guam, and the Mariana Islands. Researchers will target numerous cetacean species including endangered blue whales (*Balaenoptera musculus*), fin whales (*B. physalus*), humpback whales, sei whales (*B. borealis*) and sperm whales (*Physeter macrocephalus*) during aerial and vessel surveys for photo-identification, videography, and behavioral observations.

Adam Pack, Ph.D. [File No. 14585], University of Hawaii at Hilo, 200 West Kawili St., Hilo, HI, 96720, was issued a five-year permit to study humpback whales and other cetacean species in the Eastern, Western and Central North Pacific Ocean, primarily Hawaii and Alaska. These studies include: (1) photo-identification; (2) underwater videogrammetry; (3) underwater videography; (4) passive acoustic recordings; (5) Crittercam studies; and (6) skin and blubber biopsy sampling. In addition to humpback whales, the following species may be opportunistically studied or incidentally harassed during vessel surveys: bottlenose dolphin, spinner dolphin, spotted dolphin, Risso's dolphin (*Grampus griseus*), false killer whale, melon-headed whale (*Peponocephala electra*), pygmy killer whale, rough toothed dolphin (*Steno bredanensis*), pilot whale (*Globicephala macrorhynchus*), striped dolphin (*S. coeruleoalba*), pygmy and dwarf sperm whales (*Kogia* spp.), killer whale, sperm whale, North Pacific right whale (*Eubalaena japonica*), fin whale, blue whale, Cuvier's beaked whale (*Ziphius cavirostris*), minke whale (*B. acutorostrata*), sei whale, Bryde's whale (*B. edeni*), Fraser's dolphin (*Lagenodelphis hosei*) and Blainville's beaked whale (*Mesoplodon densirostris*).

Fred A. Sharpe, Ph.D. [File No. 14599], Alaska Whale Foundation, 4739 University Way NE #1239, Seattle WA 98105, was issued a five-year permit to conduct research on humpback whales. Research will include aerial observations and vessel-based approaches to individuals for: (1) photo-identification; (2) acoustic recordings; (3) sonar profiling; (4) pole cam observations; (5) broadcasting sounds to individuals; (6) attachment of suction cup tags; (7) SCUBA observations; and (8) opportunistic collection of fecal material. The permit also authorizes opportunistic approaches to killer whales for photo-identification. The activities will be conducted annually in the waters of Southeast Alaska, primarily from mid-May to mid-October.

Jan Straley [File No. 14122], University of Alaska Southeast Sitka Campus, 1332 Seward Ave., Sitka, AK 99835, was issued a five-year permit to study large whales in Alaskan waters. Research will include vessel-based approaches: (1) to humpback whales for biological sampling, suction cup and satellite tagging and acoustic playbacks; (2) to sperm whales for biological sampling, suction cup and satellite tagging, fishing modifications, and acoustic playbacks; (3) to killer whales for biological sampling, suction cup and satellite tagging, and acoustic playbacks; (4) to gray, minke, fin, sei, blue, and North Pacific right whales for biological sampling and tagging; and (5) to

incidentally harass and collect dead parts from prey including humpback, gray, minke, sei and fin whales, harbor porpoise, Dall's porpoise, Pacific white-sided dolphin, Northern fur seal (*Callorhinus ursinus*), Steller sea lion, and harbor seal (*Phoca vitulina*).

Briana Witteveen, Ph.D. [File No. 14296], University of Alaska Fairbanks, School of Fisheries and Ocean Sciences, 118 Trident Way, Kodiak, AK 99615, was issued a five-year permit to conduct scientific research on cetaceans year-round in the Gulf of Alaska, with emphasis on gray, fin, humpback, and killer whales. Takes will occur by close approach to collect photographs, recordings of vocalizations, biopsy samples, prey parts, sloughed skin, to attach suction cup tags, and to document response to acoustic deterrents. Sei, blue, minke, sperm, and right whales will be taken by close approach to collect photographs and biopsy samples. Pacific white-sided dolphins, Dall's porpoise, harbor porpoise, Steller sea lions, harbor seals, and Northern fur seals will be incidentally harassed during research activities.

Ann Zoidis [File No. 14353], Cetos Research Organization, 33 Echo Ave., Suite 5, Oakland, CA 94611, was issued a five-year permit to conduct scientific research on humpback and minke whales in Hawaiian waters. Research will occur annually from January through March. Humpback whale research will be focused in the Au'au Channel near Maui. Research activities will include photo-identification, behavioral observations, passive acoustic recording, and underwater photo/videography. Suction cup tags will be deployed on humpback whales. Minke whales will be approached for photo-identification anywhere within the main Hawaiian islands. Short-finned pilot, pygmy and dwarf sperm, pygmy killer, false killer, Cuvier's beaked, and melon-headed whales and bottlenose, Risso's, rough-toothed, spinner, and pantropical spotted dolphins will be incidentally harassed during research activities.

In compliance with the National Environmental Policy Act of 1969 (42 U.S.C. 4321 *et seq.*), an environmental assessment (EA) was prepared analyzing the effects of the permitted activities on the human environment. Based on the analyses in the EA, NMFS determined that issuance of the permits and amendment will not significantly impact the quality of the human environment and that preparation of an environmental impact statement was not required. That determination is documented in a Finding of No Significant Impact (FONSI), signed on July 14, 2010.

Issuance of these permits, as required by the ESA, was based on a finding that such permits: (1) were applied for in good faith; (2) will not operate to the disadvantage of such endangered species; and (3) are consistent with the purposes and policies set forth in section 2 of the ESA.

Documents may be reviewed in the following locations:

Permits, Conservation and Education Division, Office of Protected Resources, NMFS, 1315 East-West Highway, Room 13705, Silver Spring, MD 20910; phone (301)713–2289; fax (301)713–0376;

Northwest Region, NMFS, 7600 Sand Point Way NE, BIN C15700, Bldg. 1, Seattle, WA 98115–0700; phone (206)526–6150; fax (206)526–6426;

Alaska Region, NMFS, P.O. Box 21668, Juneau, AK 99802–1668; phone (907)586–7221; fax (907)586–7249;

Southwest Region, NMFS, 501 West Ocean Blvd., Suite 4200, Long Beach, CA 90802–4213; phone (562)980–4001; fax (562)980–4018;

Pacific Islands Region, NMFS, 1601 Kapiolani Blvd., Rm 1110, Honolulu, HI 96814–4700; phone (808)944–2200; fax (808)973–2941;

Northeast Region, NMFS, 55 Great Republic Drive, Gloucester, MA 01930; phone (978)281–9300; fax (978)281–9333; and

Southeast Region, NMFS, 263 13th Avenue South, Saint Petersburg, Florida 33701; phone (727)824–5312; fax (727)824–5309.

Dated: July 20, 2010.

Tammy C. Adams,

Acting Chief, Permits, Conservation and Education Division, Office of Protected Resources, National Marine Fisheries Service.

[FR Doc. 2010–18130 Filed 7–22–10; 8:45 am]

BILLING CODE 3510–22–S

COMMITTEE FOR PURCHASE FROM PEOPLE WHO ARE BLIND OR SEVERELY DISABLED

Procurement List Additions

AGENCY: Committee for Purchase From People Who Are Blind or Severely Disabled.

ACTION: Additions to the Procurement List.

SUMMARY: This action adds products and services to the Procurement List that will be furnished by nonprofit agencies employing persons who are blind or have other severe disabilities.

DATES: *Effective Date:* 8/23/2010.

ADDRESSES: Committee for Purchase From People Who Are Blind or Severely Disabled, Jefferson Plaza 2, Suite 10800, 1421 Jefferson Davis Highway, Arlington, Virginia 22202–3259.

FOR FURTHER INFORMATION CONTACT: Barry S. Lineback, Telephone: (703) 603–7740, Fax: (703) 603–0655, or e-mail *CMTEFedReg@AbilityOne.gov.*

SUPPLEMENTARY INFORMATION:

Additions

On 5/28/2010 (75 FR 29994–29995) and 6/4/2010 (75 FR 31768–31769), the Committee for Purchase From People Who Are Blind or Severely Disabled published notices of proposed additions to the Procurement List.

After consideration of the material presented to it concerning capability of qualified nonprofit agencies to provide the products and services and impact of the additions on the current or most recent contractors, the Committee has determined that the products and services listed below are suitable for procurement by the Federal Government under 41 U.S.C. 46–48c and 41 CFR 51–2.4.

Regulatory Flexibility Act Certification

I certify that the following action will not have a significant impact on a substantial number of small entities. The major factors considered for this certification were:

1. The action will not result in any additional reporting, recordkeeping or other compliance requirements for small entities other than the small organizations that will furnish the products and services to the Government.

2. The action will result in authorizing small entities to furnish the products and services to the Government.

3. There are no known regulatory alternatives which would accomplish the objectives of the Javits-Wagner-O'Day Act (41 U.S.C. 46–48c) in connection with the products and services proposed for addition to the Procurement List.

End of Certification

Accordingly, the following products and services are added to the Procurement List:

Products

Padded Bright Self Stick Notes

NSN: 7530–01–285–8355—Padded, yellow, 4 x 6″ unruled self stick notes.

NSN: 7530–01–385–7560—Padded, bright, 1–1/2 x 2″ self stick notes.

NPA: Association for the Blind & Visually Impaired & Goodwill Ind. of Greater Rochester, Rochester, NY.

Contracting Activity: Federal Acquisition Service, GSA/FSS OFC SUP CTR—Paper Products, New York, NY

Coverage: A–List for the Total Government Requirement as aggregated by the General Services Administration.

Peel N Stick Kit

NSN: 7220–01–579–6875.
NSN: 7220–01–579–6877.
NSN: 7220–01–579–6876.
NSN: 7220–01–579–6880.
NSN: 7220–01–579–6870.
NPA: Louisiana Association for the Blind, Shreveport, LA.
Contracting Activity: GSA/Federal Acquisition Service, Arlington, VA
Coverage: B–List for the Broad Government Requirement as aggregated by the General Services Administration.

Pen, Ballpoint, Retractable

NSN: 7520–00–NIB–2091—3/PG, 1.0 mm medium point, blue ink
NSN: 7520–00–NIB–2092—3/PG, 1.0 mm medium point, black ink
NSN: 7520–00–NIB–2093—3/PG, 0.7 mm fine point, blue ink
NSN: 7520–00–NIB–2094—3/PG, 0.7 mm fine point, black ink
NSN: 7520–00–NIB–2097—6/PG, 1.0 mm medium point, black ink
NSN: 7520–00–NIB–2098—6/PG, 1.0 mm medium point, blue ink
Coverage: A–List for the Total Government Requirement as aggregated by the General Services Administration.
NSN: 7520–00–NIB–2099—6/PG, 1.0 mm medium point, asst. color ink—2 ea of 3 colors.
Coverage: B–List for the Broad Government Requirement as aggregated by the General Services Administration.
NPA: Industries for the Blind, Inc., West Allis, WI.
Contracting Activity: Federal Acquisition Service, GSA/FSS OFC SUP CTR—Paper Products, New York, NY

Services:

Service Type/Location: Custodial/Grounds Service, Donna Border Station, U.S. Highway 281and FM 493, Donna, TX.
NPA: Mavagi Enterprises, Inc., San Antonio, TX.
Contracting Activity: General Services Administration, Public Buildings Service, Building Services Team, Fort Worth, TX.

Service Type/Location: Document Assembly, Northern Research Station, 1992 Folwell Avenue, St. Paul, MN.
NPA: Opportunity Partners Inc., Minnetonka, MN.
Contracting Activity: Department Of Agriculture, St. Paul, MN.

Service Type/Locations:
Janitorial Service, Mt. Shasta Ranger Station, 204 W. Alma Street, Mt. Shasta, CA.
McCloud Ranger Station, 2019 Forest Road, McCloud, CA.
NPA: Siskiyou Opportunity Center, Inc., Mt Shasta, CA.
Contracting Activity: Dept. of Agriculture, Forest Service, Shasta-Trinity National Forest, Redding, CA.

Service Type/Location: Grounds Maintenance, National Weather Service Forecast Office, 400 Parkway Road, Charleston, WV.
NPA: Goodwill Industries of Kanawha Valley, Inc., Charleston, WV.
Contracting Activity: Department of Commerce, National Oceanic and Atmospheric Administration, Norfolk, VA.

Service Type/Location: Mailroom/Courier Service, San Juan Customhouse Building, 1 La Puntilla Street, San Juan, PR.
NPA: The Corporate Source, Inc., New York, NY.
Contracting Activity: Department of Homeland Security, Bureau of Customs and Border Protection, Office of Procurement, Washington, DC.

Service Type/Location: Custodial and Grounds Maintenance, U.S. Courthouse, 327 South Church Street, Rockford, IL.
NPA: Goodwill Industries of Southeastern Wisconsin, Inc., Milwaukee, WI.
Contracting Activity: General Services Administration, Public Buildings Service, Property Management Division, Springfield, IL.

Barry S. Lineback,
Director, Business Operations.

[FR Doc. 2010–18120 Filed 7–22–10; 8:45 am]
BILLING CODE 6353–01–P

COMMITTEE FOR PURCHASE FROM PEOPLE WHO ARE BLIND OR SEVERELY DISABLED

Procurement List Proposed Additions and Deletions

AGENCY: Committee for Purchase From People Who Are Blind or Severely Disabled.

ACTION: Proposed Additions to and Deletions From the Procurement List.

SUMMARY: The Committee is proposing to add products to the Procurement List that will be furnished by nonprofit agencies employing persons who are blind or have other severe disabilities and to delete products previously furnished by such agencies.

Comments Must Be Received On or Before: 8/23/2010.

ADDRESSES: Committee for Purchase From People Who Are Blind or Severely Disabled, Jefferson Plaza 2, Suite 10800, 1421 Jefferson Davis Highway, Arlington, Virginia 22202–3259.

FOR FURTHER INFORMATION OR TO SUBMIT COMMENTS CONTACT: Barry S. Lineback, Telephone: (703) 603–7740, Fax: (703) 603–0655, or e-mail *CMTEFedReg@AbilityOne.gov.*

SUPPLEMENTARY INFORMATION: This notice is published pursuant to 41 U.S.C. 47(a)(2) and 41 CFR 51–2.3. Its purpose is to provide interested persons an opportunity to submit comments on the proposed actions.

Additions

If the Committee approves the proposed additions, the entities of the Federal Government identified in this notice will be required to procure the products listed below from nonprofit agencies employing persons who are blind or have other severe disabilities.

Regulatory Flexibility Act Certification

I certify that the following action will not have a significant impact on a substantial number of small entities. The major factors considered for this certification were:

1. If approved, the action will not result in any additional reporting, recordkeeping or other compliance requirements for small entities other than the small organizations that will furnish the products to the Government.

2. If approved, the action will result in authorizing small entities to furnish the products to the Government.

3. There are no known regulatory alternatives which would accomplish the objectives of the Javits-Wagner-O'Day Act (41 U.S.C. 46–48c) in connection with the products proposed for addition to the Procurement List.

Comments on this certification are invited. Commenters should identify the statement(s) underlying the certification on which they are providing additional information.

End of Certification

The following products are proposed for addition to Procurement List for production by the nonprofit agencies listed:

Products

NSN: MR 414—Glove, Latex, Pink.
NPA: New York City Industries for the Blind, Inc., Brooklyn, NY.
Contracting Activity: Military Resale-Defense Commissary Agency, Fort Lee, VA.
Coverage: C–List for the requirement of military commissaries and exchanges as aggregated by the Defense Commissary Agency.

Navy Working Uniform (Blouses and Trousers)—Types II and III and Navy Parkas

NSNs:
8405–00–NIB–0410—Type II Blouse, Men's, Navy Work Uniform X–SMALL X–SHORT
8405–00–NIB–0411—Type II Blouse, Men's, Navy Work Uniform X–SMALL SHORT
8405–00–NIB–0412—Type II Blouse, Men's, Navy Work Uniform X–SMALL Regular
8405–00–NIB–0413—Type II Blouse, Men's, Navy Work Uniform X–SMALL Long
8405–00–NIB–0414—Type II Blouse, Men's, Navy Work Uniform SMALL XX–SHORT

8405–00–NIB–0415—Type II Blouse, Men's, Navy Work Uniform SMALL X–SHORT
8405–00–NIB–0416—Type II Blouse, Men's, Navy Work Uniform SMALL SHORT
8405–00–NIB–0417—Type II Blouse, Men's, Navy Work Uniform SMALL REG
8405–00–NIB–0418—Type II Blouse, Men's, Navy Work Uniform SMALL REG
8405–00–NIB–0419—Type II Blouse, Men's, Navy Work Uniform SMALL X–LONG
8405–00–NIB–0420—Type II Blouse, Men's, Navy Work Uniform MED XX–SHORT
8405–00–NIB–0421—Type II Blouse, Men's, Navy Work Uniform MED X–SHORT
8405–00–NIB–0422—Type II Blouse, Men's, Navy Work Uniform MED SHORT
8405–00–NIB–0423—Type II Blouse, Men's, Navy Work Uniform MED XX–REG
8405–00–NIB–0424—Type II Blouse, Men's, Navy Work Uniform MED LONG
8405–00–NIB–0425—Type II Blouse, Men's, Navy Work Uniform MED X–LONG
8405–00–NIB–0426—Type II Blouse, Men's, Navy Work Uniform MED XX–LONG
8405–00–NIB–0427—Type II Blouse, Men's, Navy Work Uniform LRG X–SHORT
8405–00–NIB–0428—Type II Blouse, Men's, Navy Work Uniform LRG SHORT
8405–00–NIB–0429—Type II Blouse, Men's, Navy Work Uniform LRG REG
8405–00–NIB–0430—Type II Blouse, Men's, Navy Work Uniform LRG LONG
8405–00–NIB–0431—Type II Blouse, Men's, Navy Work Uniform LRG X–LONG
8405–00–NIB–0432—Type II Blouse, Men's, Navy Work Uniform LRG XX–LONG
8405–00–NIB–0433—Type II Blouse, Men's, Navy Work Uniform X–LRG SHORT
8405–00–NIB–0434—Type II Blouse, Men's, Navy Work Uniform X–LRG REG
8405–00–NIB–0435—Type II Blouse, Men's, Navy Work Uniform X–LRG LONG
8405–00–NIB–0436—Type II Blouse, Men's, Navy Work Uniform X–LRG X–LONG
8405–00–NIB–0437—Type II Blouse, Men's, Navy Work Uniform X–LRG XX–LONG
8405–00–NIB–0438—Type II Blouse, Men's, Navy Work Uniform XX–LRG REG
8405–00–NIB–0439—Type II Blouse, Men's, Navy Work Uniform XX–LRG LONG
8405–00–NIB–0440—Type II Blouse, Men's, Navy Work Uniform XX–LRG X–LONG
8405–00–NIB–0441—Type II Blouse, Men's, Navy Work Uniform XX–LRG XX–LONG
8405–00–NIB–0442—Type II Blouse, Women's, Navy Work Uniform 32 X–SHORT
8405–00–NIB–0443—Type II Blouse, Women's, Navy Work Uniform 32 SHORT
8405–00–NIB–0444—Type II Blouse, Women's, Navy Work Uniform 35 X–SHORT
8405–00–NIB–0445—Type II Blouse, Women's, Navy Work Uniform 35 SHORT
8405–00–NIB–0446—Type II Blouse, Women's, Navy Work Uniform 35 REG
8405–00–NIB–0447—Type II Blouse, Women's, Navy Work Uniform 39 X–SHORT
8405–00–NIB–0448—Type II Blouse, Women's, Navy Work Uniform 39 SHORT
8405–00–NIB–0449—Type II Blouse, Women's, Navy Work Uniform 39 REG
8405–00–NIB–0450—Type II Blouse, Women's, Navy Work Uniform 43 REG
8405–00–NIB–0451—Type II Blouse, Women's, Navy Work Uniform 43 SHORT
8405–00–NIB–0452—Type III Blouse, Men's, Navy Work Uniform X–SMALL X–SHORT
8405–00–NIB–0453—Type III Blouse, Men's, Navy Work Uniform X–SMALL SHORT
8405–00–NIB–0454—Type III Blouse, Men's, Navy Work Uniform X–SMALL REG
8405–00–NIB–0455—Type III Blouse, Men's, Navy Work Uniform X–SMALL LONG
8405–00–NIB–0456—Type III Blouse, Men's, Navy Work Uniform SMALL XX–SHORT
8405–00–NIB–0457—Type III Blouse, Men's, Navy Work Uniform SMALL X–SHORT
8405–00–NIB–0458—Type III Blouse, Men's, Navy Work Uniform SMALL SHORT
8405–00–NIB–0459—Type III Blouse, Men's, Navy Work Uniform SMALL REG
8405–00–NIB–0460—Type III Blouse, Men's, Navy Work Uniform SMALL LONG
8405–00–NIB–0461—Type III Blouse, Men's, Navy Work Uniform SMALL X–LONG
8405–00–NIB–0462—Type III Blouse, Men's, Navy Work Uniform MED XX–SHORT
8405–00–NIB–0463—Type III Blouse, Men's, Navy Work Uniform MED X–SHORT
8405–00–NIB–0464—Type III Blouse, Men's, Navy Work Uniform MED SHORT
8405–00–NIB–0465—Type III Blouse, Men's, Navy Work Uniform MED XX–REG
8405–00–NIB–0466—Type III Blouse, Men's, Navy Work Uniform MED LONG
8405–00–NIB–0467—Type III Blouse, Men's, Navy Work Uniform MED X–LONG
8405–00–NIB–0468—Type III Blouse, Men's, Navy Work Uniform MED XX–LONG
8405–00–NIB–0469—Type III Blouse, Men's, Navy Work Uniform LRG X–SHORT
8405–00–NIB–0470—Type III Blouse, Men's, Navy Work Uniform LRG SHORT
8405–00–NIB–0471—Type III Blouse, Men's, Navy Work Uniform LRG REG
8405–00–NIB–0472—Type III Blouse, Men's, Navy Work Uniform LRG LONG
8405–00–NIB–0473—Type III Blouse, Men's, Navy Work Uniform LRG X–LONG
8405–00–NIB–0474—Type III Blouse, Men's, Navy Work Uniform LRG XX–LONG
8405–00–NIB–0475—Type III Blouse, Men's, Navy Work Uniform X–LRG SHORT
8405–00–NIB–0476—Type III Blouse, Men's, Navy Work Uniform X–LRG REG
8405–00–NIB–0477—Type III Blouse, Men's, Navy Work Uniform X–LRG LONG
8405–00–NIB–0478—Type III Blouse, Men's, Navy Work Uniform X–LRG X–LONG
8405–00–NIB–0479—Type III Blouse, Men's, Navy Work Uniform X–LRG XX–LONG
8405–00–NIB–0480—Type III Blouse, Men's, Navy Work Uniform XX–LRG REG
8405–00–NIB–0481—Type III Blouse, Men's, Navy Work Uniform XX–LRG LONG
8405–00–NIB–0482—Type III Blouse, Men's, Navy Work Uniform XX–LRG X–LONG
8405–00–NIB–0483—Type III Blouse, Men's, Navy Work Uniform XX–LRG XX–LONG
8405–00–NIB–0484—Type III Blouse, Women's, Navy Work Uniform 32 X–SHORT
8405–00–NIB–0485—Type III Blouse, Women's, Navy Work Uniform 32 SHORT
8405–00–NIB–0486 Type III Blouse, Women's, Navy Work Uniform 35 X–SHORT
8405–00–NIB–0487 Type III Blouse, Women's, Navy Work Uniform 35 SHORT
8405–00–NIB–0488 Type III Blouse, Women's, Navy Work Uniform 35 REG
8405–00–NIB–0489 Type III Blouse, Women's, Navy Work Uniform 39 X–SHORT
8405–00–NIB–0490 Type III Blouse, Women's, Navy Work Uniform 39 SHORT
8405–00–NIB–0491 Type III Blouse, Women's, Navy Work Uniform 39 REG
8405–00–NIB–0492 Type III Blouse, Women's, Navy Work Uniform 43 REG
8405–00–NIB–0493 Type III Blouse, Women's, Navy Work Uniform 43 SHORT
8405–00–NSH–2100 Type II Trousers, Mens, NWU (X–Small, X–Short)
8405–00–NSH–2101 Type II Trousers, Mens, NWU (X–Small, Short)
8405–00–NSH–2102 Type II Trousers, Mens, NWU (X–Small, Regular)
8405–00–NSH–2103 Type II Trousers, Mens, NWU (X–Small, Long)
8405–00–NSH–2104 Type II Trousers, Mens, NWI (Small, X–Short)
8405–00–NSH–2105 Type II Trousers, Mens, NWU (Small, Short)
8405–00–NSH–2106 Type II Trousers, Mens, NWU (Small, Regular)
8405–00–NSH–2107 Type II Trousers, Mens, NWU (Small, Long)
8405–00–NSH–2108 Type II Trousers, Mens, NWU (Small, X–Long)

8405–00–NSH–2109 Type II Trousers, Mens, NWU (Medium, X–Short)
8405–00–NSH–2110 Type II Trousers, Mens, NWU (Medium, Short)
8405–00–NSH–2111 Type II Trousers, Mens, NWU (Medium, Regular)
8405–00–NSH–2112 Type II Trousers, Mens, NWU (Medium-Long)
8405–00–NSH–2113 Type II Trousers, Mens, NWU (Medium, X–Long)
8405–00–NSH–2114 Type II Trousers, Mens, NWU (Medium, XX–Long)
8405–00–NSH–2115 Type II Trousers, Mens, NWU (Large, Short)
8405–00–NSH–2116 Type II Trousers, Mens, NWU (Large, Regular)
8405–00–NSH–2117 Type II Trousers, Mens, NWU (Large, Long)
8405–00–NSH–2118 Type II Trousers, Mens, NWU (Large, X–Long)
8405–00–NSH–2119 Type II Trousers, Mens, NWU (Large, XX–Long)
8405–00–NSH–2120 Type II Trousers, Mens, NWU (X–Large, Short)
8405–00–NSH–2121 Type II Trousers, Mens, NWU (X–Large, Regular)
8405–00–NSH–2122 Type II Trousers, Mens, NWU (X–Large, Long)
8405–00–NSH–2123 Type II Trousers, Mens, NWU (X–Large, X–Long)
8405–00–NSH–2124 Type II Trousers, Mens, NWU (X–Large, XX–Long)
8405–00–NSH–2125 Type II Trousers, Mens, NWU (XX–Large, Regular)
8405–00–NSH–2126 Type II Trousers, Mens, NWU (XX–Large, Long)
8405–00–NSH–2127 Type II Trousers, Mens, NWU (XX–Large, X–Long)
8405–00–NSH–2128 Type II Trousers, Mens, NWU (XX–Large, XX–Long)
8405–00–NSH–2129 Type III Trousers, Mens, NWU (X–Small, X–Short)
8405–00–NSH–2130 Type III Trousers, Mens, NWU (X–Small, Short)
8405–00–NSH–2131 Type III Trousers, Mens, NWU (X–Small, Short)
8405–00–NSH–2132 Type III Trousers, Mens, NWU (X–Small, Short)
8405–00–NSH–2133 Type III Trousers, Mens, NWI (Small, X–Short)
8405–00–NSH–2134 Type III Trousers, Mens, NWI (Small, X–Short)
8405–00–NSH–2135 Type III Trousers, Mens, NWU (Small, Regular)
8405–00–NSH–2136 Type III Trousers, Mens, NWU (Small, Long)
8405–00–NSH–2137 Type III Trousers, Mens, NWU (Small, X–Long)
8405–00–NSH–2138 Type III Trousers, Mens, NWU (Medium, X–Short)
8405–00–NSH–2139 Type III Trousers, Mens, NWU (Medium, Short)
8405–00–NSH–2140 Type III Trousers, Mens, NWU (Medium, Regular)
8405–00–NSH–2141 Type III Trousers, Mens, NWU (Medium–Long)
8405–00–NSH–2142 Type III Trousers, Mens, NWU (Medium, X–Long)
8405–00–NSH–2143 Type III Trousers, Mens, NWU (Medium, XX–Long)
8405–00–NSH–2144 Type III Trousers, Mens, NWU (Large, Short)
8405–00–NSH–2145 Type III Trousers, Mens, NWU (Large, Regular)
8405–00–NSH–2146 Type III Trousers, Mens, NWU (Large, Long)
8405–00–NSH–2147 Type III Trousers, Mens, NWU (Large, X–Long)
8405–00–NSH–2148 Type III Trousers, Mens, NWU (Large, XX–Long)
8405–00–NSH–2149 Type III Trousers, Mens, NWU (X–Large, Short)
8405–00–NSH–2150 Type III Trousers, Mens, NWU (X–Large, Regular)
8405–00–NSH–2151 Type III Trousers, Mens, NWU (X–Large, Long)
8405–00–NSH–2152 Type III Trousers, Mens, NWU (X–Large, X–Long)
8405–00–NSH–2153 Type III Trousers, Mens, NWU (X–Large, XX–Long)
8405–00–NSH–2154 Type III Trousers, Mens, NWU (XX–Large, Regular)
8405–00–NSH–2155 Type III Trousers, Mens, NWU (XX–Large, Long)
8405–00–NSH–2156 Type III Trousers, Mens, NWU (XX–Large, X–Long)
8405–00–NSH–2157 Type III Trousers, Mens, NWU (XX–Large, XX–Long)
8405–00–NSH–2158 Type II Trousers, Womens, NWU (25 X–Short)
8405–00–NSH–2159 Type II Trousers, Womens, NWU (25 Short)
8405–00–NSH–2160 Type II Trousers, Womens, NWU (29 X–Short)
8405–00–NSH–2161 Type II Trousers, Womens, NWU (29 Short)
8405–00–NSH–2162 Type II Trousers, Womens, NWU (29 Regular)
8405–00–NSH–2163 Type II Trousers, Womens, NWU (33 X–Short)
8405–00–NSH–2164 Type II Trousers, Womens, NWU (33 Short)
8405–00–NSH–2165 Type II Trousers, Womens, NWU (33 Regular)
8405–00–NSH–2166 Type II Trousers, Womens, NWU (37 Short)
8405–00–NSH–2167 Type II Trousers, Womens, NWU (37 Regular)
8405–00–NSH–2168 Type III Trousers, Womens, NWU (25 X–Short)
8405–00–NSH–2169 Type III Trousers, Womens, NWU (25 Short)
8405–00–NSH–2170 Type III Trousers, Womens, NWU (29 X–Short)
8405–00–NSH–2171 Type III Trousers, Womens, NWU (29 Short)
8405–00–NSH–2172 Type III Trousers, Womens, NWU (29 Regular)
8405–00–NSH–2173 Type III Trousers, Womens, NWU (33 X–Short)
8405–00–NSH–2174 Type III Trousers, Womens, NWU (33 Short)
8405–00–NSH–2175 Type III Trousers, Womens, NWU (33 Regular)
8405–00–NSH–2176 Type III Trousers, Womens, NWU (37 Short)
8405–00–NSH–2177 Type III Trousers, Womens, NWU (37 Regular)
8405–00–NSH–2178 Type II Trouser, Working, Uniform Size = Special Measurement
8405–00–NSH–2179 Type III Trouser, Working, Uniform Size = Special Measurement
8415–00–NIB–0880 Parka, Navy, Size Small Regular
8415–00–NIB–0883 Parka, Navy, Size Large Long
8415–00–NIB–0881 Parka, Navy, Size Medium Regular
8415–00–NIB–0884 Parka, Navy, Size XLarge Long
8415–00–NIB–0885 Parka, Navy, Size XLarge Reg
8415–00–NIB–0882 Parka, Navy, Size Large Regular

NPAs: Winston-Salem Industries for the Blind, Winston-Salem, NC
Raleigh Lions Clinic for the Blind, Inc., Raleigh, NC
Blind Industries & Services of Maryland, Baltimore, MD
Group Home Foundation, Inc., Belfast, ME
ReadyOne Industries, Inc., El Paso, TX

Contracting Activity: Dept of the Army, XR W2DF RDECOM ACQ CTR Natick, Natick, MA.

Coverage: C–List for 50% of the requirement of the U.S. Navy, as aggregated by the Department of the Army Research, Development and Engineering Command, Natick, MA.

Note: FPI is considering exercise of its priority for the Navy Working Uniform items being proposed for addition to the Procurement List. Should FPI prioritize the uniform items and not grant the AbilityOne Program a waiver as requested, the proposed addition will be withdrawn.

Deletions

Regulatory Flexibility Act Certification

I certify that the following action will not have a significant impact on a substantial number of small entities. The major factors considered for this certification were:

1. If approved, the action will not result in additional reporting, recordkeeping or other compliance requirements for small entities.
2. If approved, the action may result in authorizing small entities to furnish the products to the Government.
3. There are no known regulatory alternatives which would accomplish the objectives of the Javits-Wagner-O'Day Act (41 U.S.C. 46–48c) in connection with the products proposed for deletion from the Procurement List.

End of Certification

The following products are proposed for deletion from the Procurement List:

Products

Protector, Hospital Bed, Pillow

NSN: 7210–00–958–9118.
NPA: Bosma Industries for the Blind, Inc., Indianapolis, IN.
Contracting Activity: GSA/FAS Southwest Supply Center (QSDAC), Fort Worth, TX.

Mop, Sponge and Refill

NSN: 7920–01–383–7799.
NSN: 7920–01–383–7927.
NPA: The Lighthouse for the Blind, Inc. (Seattle Lighthouse), Seattle, WA.
Contracting Activity: GSA/FAS Southwest Supply Center (QSDAC), Fort Worth, TX.

Barry S. Lineback,

Director, Business Operations.

[FR Doc. 2010–18121 Filed 7–22–10; 8:45 am]

BILLING CODE 6353–01–P

DEPARTMENT OF DEFENSE

Office of the Secretary

Federal Advisory Committee; Missile Defense Advisory Committee

AGENCY: Missile Defense Agency (MDA), DoD.

ACTION: Notice of closed meeting.

SUMMARY: Under the provisions of the Federal Advisory Committee Act of 1972 (5 U.S.C., Appendix, as amended) and the Government in the Sunshine Act of 1976 (5 U.S.C. 552b, as amended) and 41 CFR 102–3.150, the Department of Defense announces that the Missile Defense Advisory Committee will meet on August 4 and 5, 2010, in Washington, DC.

DATES: The meeting will be held on Wednesday, August 4 (from 1:30 p.m. to 4:30 p.m.) and on Thursday, August 5, 2010 (from 8:15 a.m. to 5 p.m.). Security clearance and visit requests are required for access.

ADDRESSES: The meeting will be held at 7100 Defense Pentagon, Washington, DC 20301–7100.

FOR FURTHER INFORMATION CONTACT: Mr. David Bagnati, Designated Federal Officer at *MDAC@mda.mil,* phone/voice mail 703–695–6438, or mail at 7100 Defense Pentagon, Washington, DC 20301–7100.

SUPPLEMENTARY INFORMATION:

Purpose of the Meeting

At this meeting, the Committee will receive classified briefings by Missile Defense Agency senior staff and Program Managers on the Agency's strategic perspective and the Ballistic Missile Defense System framework and architecture.

Agenda

Topics tentatively scheduled for classified discussion include, but are not limited to briefings on the Ballistic Missile Defense Review, Early Intercept, Phased Adaptive Approach, and Missile Defense Agency Program Capabilities and Limitations; Ethical Considerations for Advisory Committee Members; Missile Defense Advisory Committee Executive Session; and Missile Defense Advisory Committee outbrief to the Director, Missile Defense Agency.

Meeting Accessibility

Pursuant to 5 U.S.C. 552b, as amended, and 41 CFR 102–3.155 the Missile Defense Agency has determined that the meeting shall be closed to the public. The Director, Missile Defense Agency, in consultation with the Missile Defense Agency Office of General Counsel, has determined in writing that the public interest requires that all sessions of the committee's meeting will be closed to the public because they will be concerned with classified information and matters covered by section 5 U.S.C. 552b(c)(1).

Written Statements

Pursuant to 41 CFR 102–3.105(j) and 102–3.140, and section 10(a)(3) of the Federal Advisory Committee Act of 1972, the public or interested organizations may submit written statements to the membership of the Missile Defense Advisory Committee about its mission and functions. Written statements may be submitted at any time or in response to the stated agenda of a planned meeting of the Missile Defense Advisory Committee.

All written statements shall be submitted to the Designated Federal Officer for the Missile Defense Advisory Committee, in the following formats: One hard copy with original signature and one electronic copy via e-mail (acceptable file formats: Adobe Acrobat PDF, MS Word or MS PowerPoint), and this individual will ensure that the written statements are provided to the membership for their consideration. Contact information for the Designated Federal Officer is as stated above under **FOR FURTHER INFORMATION CONTACT** and can also be obtained from the GSA's Federal Advisory Committee Act Database *https://www.fido.gov/facadatabase/public.asp.*

Statements being submitted in response to the agenda mentioned in this notice must be received by the Designated Federal Officer at least five calendar days prior to the meeting which is the subject of this notice. Written statements received after this date may not be provided to or considered by the Missile Defense Advisory Committee until its next meeting. The Designated Federal Officer will review all timely submissions with the Missile Defense Advisory Committee Chairperson and ensure they are provided to all members of the Missile Defense Advisory Committee before the meeting that is the subject of this notice.

Dated: July 19, 2010.

Mitchell S. Bryman,

Alternate OSD Federal Register Liaison Officer, Department of Defense.

[FR Doc. 2010–18003 Filed 7–22–10; 8:45 am]

BILLING CODE 5001–06–P

DEPARTMENT OF EDUCATION

Notice of Proposed Information Collection Requests

AGENCY: Department of Education.

SUMMARY: The Director, Information Collection Clearance Division, Regulatory Information Management Services, Office of Management, invites comments on the proposed information collection requests as required by the Paperwork Reduction Act of 1995.

DATES: Interested persons are invited to submit comments on or before September 21, 2010.

SUPPLEMENTARY INFORMATION: Section 3506 of the Paperwork Reduction Act of 1995 (44 U.S.C. Chapter 35) requires that the Office of Management and Budget (OMB) provide interested Federal agencies and the public an early opportunity to comment on information collection requests. OMB may amend or waive the requirement for public consultation to the extent that public participation in the approval process would defeat the purpose of the information collection, violate State or Federal law, or substantially interfere with any agency's ability to perform its statutory obligations. The Director, Information Collection Clearance Division, Regulatory Information Management Services, Office of Management, publishes that notice containing proposed information collection requests prior to submission of these requests to OMB. Each proposed information collection, grouped by office, contains the following: (1) Type of review requested, *e.g.* new, revision, extension, existing or reinstatement; (2) Title; (3) Summary of the collection; (4) Description of the need for, and proposed use of, the information; (5) Respondents and frequency of collection; and (6) Reporting and/or Recordkeeping burden. OMB invites public comment.

The Department of Education is especially interested in public comment addressing the following issues: (1) Is this collection necessary to the proper functions of the Department; (2) will this information be processed and used in a timely manner; (3) is the estimate of burden accurate; (4) how might the Department enhance the quality, utility, and clarity of the information to be collected; and (5) how might the Department minimize the burden of this collection on the respondents, including through the use of information technology.

Dated: July 20, 2010.

Darrin A. King,

Director, Information Collection Clearance Division, Regulatory Information Management Services, Office of Management.

Federal Student Aid

Type of Review: New.

Title: Criteria for Foreign Schools to Apply to Participate in Title IV, Higher Education Act of 1965, as amended (HEA) Programs.

OMB #: Pending.

Agency Form Number(s): N/A.

Frequency: On Occasion; Annually.

Affected Public: Individuals or household; Businesses or other for-profit; Not-for-profit institutions; State, Local, or Tribal Gov't, SEAs or LEAs.

Reporting and Recordkeeping Hour Burden:

Responses: 4,364.
Burden Hours: 513.

Abstract: These regulations (34 CFR 600.54, 600.55, 600.57) propose changes to aspects of foreign school criteria for eligibility to apply for participation in Title IV, HEA programs (demonstrate method of determining academic work in a non-degree program is equivalent to the definition of an academic year that is required for domestic schools and to report the language in which instruction will be offered); changes to reporting requirements for foreign graduate medical schools (Medical College Admission Test (MCAT)) scores for incoming students and United States Medical Licensing Examination (USMLE) scores for graduates) and new reporting requirements for foreign nursing schools (National Council Licensure Examination for Registered Nurses (NCLEX–RN)) scores, as well as new requirements for obtaining consent forms from United States (US) students attending foreign medical and nursing schools to gather such scores.

Requests for copies of the proposed information collection request may be accessed from *http://edicsweb.ed.gov*, by selecting the "Browse Pending Collections" link and by clicking on link number 4289. When you access the information collection, click on "Download Attachments" to view. Written requests for information should be addressed to U.S. Department of Education, 400 Maryland Avenue, SW., LBJ, Washington, DC 20202–4537. Requests may also be electronically mailed to *ICDocketMgr@ed.gov* or faxed to 202–401–0920. Please specify the complete title of the information collection when making your request.

Comments regarding burden and/or the collection activity requirements should be electronically mailed to *ICDocketMgr@ed.gov.* Individuals who use a telecommunications device for the deaf (TDD) may call the Federal Information Relay Service (FIRS) at 1–800–877–8339.

[FR Doc. 2010–18082 Filed 7–22–10; 8:45 am]

BILLING CODE 4000–01–P

DEPARTMENT OF EDUCATION

Submission for OMB Review; Comment Request

AGENCY: Department of Education.

SUMMARY: The Director, Information Collection Clearance Division, Regulatory Information Management Services, Office of Management invites comments on the submission for OMB review as required by the Paperwork Reduction Act of 1995 (Pub. L. 104–13).

DATES: Interested persons are invited to submit comments on or before August 23, 2010.

ADDRESSES: Written comments should be addressed to the Office of Information and Regulatory Affairs, Attention: Education Desk Officer, Office of Management and Budget, 725 17th Street, NW., Room 10222, New Executive Office Building, Washington, DC 20503, be faxed to (202) 395–5806 or emailed to *oira_submission@omb.eop.gov* with a cc: to *ICDocketMgr@ed.gov.*

SUPPLEMENTARY INFORMATION: Section 3506 of the Paperwork Reduction Act of 1995 (44 U.S.C. Chapter 35) requires that the Office of Management and Budget (OMB) provide interested Federal agencies and the public an early opportunity to comment on information collection requests. The OMB is particularly interested in comments which:

- Evaluate whether the proposed collection of information is necessary for the proper performance of the functions of the agency, including whether the information will have practical utility;
- Evaluate the accuracy of the agency's estimate of the burden of the proposed collection of information, including the validity of the methodology and assumptions used;
- Enhance the quality, utility, and clarity of the information to be collected; and
- Minimize the burden of the collection of information on those who are to respond, including through the use of appropriate automated, electronic, mechanical, or other technological collection techniques or other forms of information technology.

Dated: July 20, 2010.

Darrin A. King,

Director, Information Collection Clearance Division, Regulatory Information Management Services, Office of Management.

Office of Innovation and Improvement

Type of Review: Extension.

Title: Application for the Investing in Innovation (i3) Grants Program.

OMB #: 1855–0021.

Form #: N/A.

Frequency: Annually.

Affected Public: State, Local, or Tribal Government (Gov't), State Educational Agencies (SEAs) or Local Educational Agencies (LEAs).

Reporting and Recordkeeping Hour Burden:

Responses: 2,000.
Burden Hours: 150,000.

Abstract: The American Recovery and Reinvestment Act of 2009, the Office of Innovation and Improvement (OII) has developed an application package for the new Investing in Innovation Fund (i3) Program. Under this program, the Department will use the application to award three types of grants: Scale-Up grants, Validation grants and Development grants. The purpose of this program is to provide competitive grants to applicants with a record of improving student achievement and attainment in order to expand the implementation of, and investment in, innovative practices that are demonstrated to have an impact on improving student achievement or student growth, closing achievement gaps, decreasing dropout rates, increasing high school graduation rates, and increasing college enrollment and completion rates. These grants will allow eligible entities to expand and develop innovative practices that can serve as models of best practices, allow eligible entities to work in partnership with the private sector and the philanthropic community, and identify and document best practices that can be shared and taken to scale based on demonstrated success.

This information collection is being submitted under the Streamlined Clearance Process for Discretionary Grant Information Collections (1894–0001). Therefore, the 30-day public comment period notice will be the only public comment notice published for this information collection.

Requests for copies of the information collection submission for OMB review may be accessed from the RegInfo.gov Web site at *http://www.reginfo.gov/public/do/PRAMain* or from the Department's Web site at *http://edicsweb.ed.gov,* by selecting the "Browse Pending Collections" link and

by clicking on link number 4355. When you access the information collection, click on "Download Attachments" to view. Written requests for information should be addressed to U.S. Department of Education, 400 Maryland Avenue, SW., LBJ, Washington, DC 20202–4537. Requests may also be electronically mailed to the Internet address *ICDocketMgr@ed.gov* or faxed to 202–401–0920. Please specify the complete title and OMB Control Number of the information collection when making your request.

Individuals who use a telecommunications device for the deaf (TDD) may call the Federal Information Relay Service (FIRS) at 1–800–877–8339.

[FR Doc. 2010–18083 Filed 7–22–10; 8:45 am]

BILLING CODE 4000–01–P

DEPARTMENT OF ENERGY

Amended Record of Decision for the Decommissioning of Eight Surplus Production Reactors at the Hanford Site, Richland, WA

AGENCY: Department of Energy.

ACTION: Amended Record of Decision.

SUMMARY: The Department of Energy (DOE) is amending its initial Record of Decision (ROD) issued September 16, 1993 (58 **Federal Register** (FR) 48509), pursuant to the *Final Environmental Impact Statement on Decommissioning of Eight Surplus Production Reactors at the Hanford Site, Richland, WA* (Surplus Production Reactors Final EIS) (DOE/EIS–0119F, December 1992). The Surplus Production Reactors Final EIS evaluated the potential environmental impacts, benefits and costs, and institutional and programmatic needs associated with the decommissioning of eight surplus production reactors at the Hanford Site.

These reactors (B, C, D, DR, F, H, KE and KW), operated between the years 1944 and 1971 and retired from service, have been declared surplus by DOE, and are available for decommissioning. The 1993 ROD documented DOE's decision to select safe storage followed by deferred one-piece removal for decommissioning of the eight surplus production reactors. DOE has been implementing the safe storage component of this 1993 reactor decommissioning ROD consistent with the remedial action cleanup schedules in the Hanford Federal Facility Agreement and Consent Order (Tri-Party Agreement, TPA). Through the Tri-Party Agreement, DOE continues to evaluate this decommissioning action in light of *Comprehensive Environmental Response, Compensation, and Liability Act of 1980* (CERCLA) and *Resource Conservation and Recovery Act of 1976* (RCRA) remediation of the past practice units in the 100 Area.

As explained in this amended ROD, DOE has decided to broaden the decommissioning approach for these eight reactors. DOE is retaining the deferred one-piece removal option, as selected in the 1993 ROD, and, based on a recently prepared Supplement Analysis, is adding an option for immediate dismantlement.

ADDRESSES: The 1992 Surplus Production Reactors Final EIS, the 1993 ROD, the Supplement Analysis, and this Amended ROD are available electronically on the DOE NEPA Web site at *http://www.nepa.energy.gov/*.

Copies of the documents referenced herein are available from the: Center for Environmental Management Information, P.O. Box 23769, Washington, DC 20026–3769. Telephone: 1–800–736–3282 (in Washington, DC: 202–863–5084).

FOR FURTHER INFORMATION CONTACT: For further information on the Supplement Analysis for the Surplus Production Reactors EIS, contact: Woody Russell, National Environmental Policy Act (NEPA) Compliance Officer, U.S. Department of Energy, Office of River Protection, 2440 Stevens Center, MSIN H6–60, Richland, WA 99354, Telephone: 509–373–5227.

For general information on DOE's NEPA process, contact: Ms. Carol Borgstrom, Director, Office of NEPA Policy and Compliance (GC–54), U.S. Department of Energy, 1000 Independence Avenue, SW., Washington, DC 20585. Telephone 202–586–4600, or leave a message at 1–800–472–2756.

SUPPLEMENTARY INFORMATION:

I. Background

In March 1989, DOE issued the Draft Surplus Production Reactors EIS (DOE/EIS–0119) to analyze alternatives for decommissioning eight water-cooled, graphite-moderated plutonium-production reactors, located along the Columbia River in Washington State. The eight reactors (B, C, D, DR, F, H, KE and KW), operated between the years 1944 and 1971, have been retired from service. The alternatives analyzed in the Draft EIS included the no-action, immediate one-piece removal, safe storage followed by deferred one-piece removal, safe storage followed by deferred dismantlement, and in situ decommissioning alternatives. Comments received during the public and agency review process of the Draft Surplus Production Reactors EIS did not require the Department to modify any alternatives, to develop and evaluate any new alternatives, or to supplement, improve, or modify its analyses of the decommissioning alternatives. Therefore, the Department prepared and distributed an Addendum to the Draft Surplus Production Reactors EIS in accordance with 40 CFR 1503(c). The Addendum (December 1992) stated DOE's response to issues raised by commenters and minor changes to the text. The Draft Surplus Production Reactors EIS and the Addendum constitute the Final EIS (DOE/EIS–0119F) under the provisions of the Council on Environmental Quality regulations (40 CFR 1503.4(c)). The Notice of Availability of the Final EIS was published in the **Federal Register** on January 15, 1993 (58 FR 4690).

As stated in the 1993 ROD, DOE regards the safe storage followed by deferred dismantlement, safe storage followed by one-piece removal, and immediate one-piece removal alternatives as equally favorable based solely on the evaluation of environmental impacts. [Note that a ninth reactor, N Reactor, was in transition regarding its defense production mission at the time of the Surplus Production Reactor EIS, and was not within the scope of the Final Surplus Production Reactor EIS or ROD. N Reactor has been retired and is undergoing deactivation under CERCLA.]

DOE uses the CERCLA process to decommission and dismantle reactors based on the joint EPA/DOE policy on reactor decommissioning signed in 1995 and incorporated into the TPA. Since the NEPA ROD in 1993, documentation has been prepared and implemented under CERCLA, resulting in placement of five of the eight surplus reactors (C, D, DR, F, and H) into interim safe storage (ISS). [ISS, or "cocooning," is the process of demolishing all but the shield walls surrounding the reactor core, removing or stabilizing all loose contamination within the facility, and placing a new roof on the remaining structure. A single doorway in the structure is installed to provide access for surveillance and maintenance work. This doorway is welded shut, and all other openings in the shield walls are sealed to prevent intrusions and the release of radioactive materials. The facility is inspected every five years and remotely monitored at all times for changes in moisture and temperature. The reactor cores could remain in ISS for up to 75 years.] Of the remaining three reactors, B Reactor is under

consideration for preservation as a national historic site. Although KE and KW Reactors have had CERCLA documentation issued that identified ISS as the preferred alternative, the KE and KW reactors are not currently in ISS. However, they are the next reactors in the queue for completion of ISS.

II. Decision

DOE has decided to broaden the decommissioning approach for these eight surplus reactors. DOE is retaining the deferred one-piece removal option, as selected in the 1993 ROD, and, based on a recently prepared Supplement Analysis, is modifying the deferred dismantlement option, as expressed in the Final EIS, by selecting an option for immediate dismantlement.

Activities to implement this decision will be conducted as CERCLA non-time critical removal actions. Specific details on unit operations of dismantlement will be addressed in the CERCLA documentation. All practicable means to avoid or minimize environmental harm have been incorporated in this decision.

III. Basis for the Decision

In accordance with CEQ NEPA regulations (40 CFR 1502.9(c)) and DOE NEPA regulations (10 CFR 1021.314(c)), DOE prepared a Supplement Analysis to determine whether a supplemental EIS or a new EIS is required. The Supplement Analysis focused on the resource areas and considerations most likely to be affected by this amended ROD; specifically, worker radiological impacts (routine operations and accident conditions), land use, historical/cultural resources, ecological resources, and cumulative impacts.

Preliminary calculations (based on near-term dismantlement of the KE reactor core and extrapolated to all eight surplus production reactors) indicate that worker dose under a dismantlement scenario for all eight reactors (approximately 80 person-rem) would be expected to be substantially less than that projected in the Final EIS (532 person-rem) for deferred dismantlement, and slightly higher than that for deferred one-piece removal (51 person-rem in the safe storage/deferred one-piece removal scenario). The actual dose rates to which workers would be exposed would be controlled by such means as remote handling, use of robotics, and the use of shielding. Worker radiation exposure would be controlled to stay within administrative and regulatory limits. Regardless, less than one latent cancer fatality (LCF) would be expected under all of the alternatives. No new bounding accident scenarios associated with reactor decommissioning have been identified; less than one LCF would be expected as a result of any postulated bounding accident.

No new land use, historical/cultural resource, or ecological resources impacts were identified in the Supplement Analysis relevant to decommissioning activities under deferred one-piece removal or immediate dismantlement.

Also, as stated in the Supplement Analysis, no short-term or long-term cumulative impacts (based on the analyses presented in DOE/EIS–0391, *Draft Tank Closure and Waste Management Environmental Impact Statement*) were identified relevant to decommissioning activities under one-piece removal or dismantlement.

In evaluating the viability of supporting accelerated decommissioning of surplus reactor facilities in a safe and environmentally effective manner, DOE also considered technological advances and additional information since the Final EIS and the 1993 ROD were issued. New engineering controls (such as development and deployment of robotics in an array of field applications), data collection and validation, worker safety practices, and real-time lessons learned from reactor demolition activities at Brookhaven National Laboratory all could be applied to accelerated surplus reactor decommissioning at the Hanford Site. These controls and information would enable accelerated decommissioning activities to be conducted safely.

IV. Determination

DOE has decided to broaden the decommissioning approach for the surplus reactors, retaining the deferred one-piece removal option and adding an option for immediate dismantlement. Based on the Supplement Analysis, this is not a substantial change in the proposed action relevant to environmental concerns. Further, there are no significant new circumstances or information relevant to environmental concerns and bearing on the proposed actions or their impacts described in the Surplus Production Reactors Final EIS. Therefore, DOE has determined that neither a new EIS, nor a supplement to the Surplus Production Reactors EIS, is required.

Issued in Washington, DC on July 16, 2010.

Inés R. Triay,

Assistant Secretary for Environmental Management.

[FR Doc. 2010–18079 Filed 7–22–10; 8:45 am]

BILLING CODE 6450–01–P

DEPARTMENT OF ENERGY

Notice of Solicitation of Nominations for Appointment as a Member of the Biomass Research and Development Technical Advisory Committee; Correction

AGENCY: Department of Energy.

ACTION: Notice of solicitation of members; correction.

SUMMARY: On July 15, 2010, the Department of Energy published a notice of solicitation of members (75 FR 41166). This document corrects that notice.

FOR FURTHER INFORMATION CONTACT: Laura McCann, Designated Federal Official for the Committee, Office of Energy Efficiency and Renewable Energy, U.S. Department of Energy, 1000 Independence Avenue, SW., Washington, DC 20585; (202) 586–7766; e-mail: *laura.mccann@ee.doe.gov* or Christina Fagerholm at (202) 586–2933; e-mail: *christina.fagerholm@ee.doe.gov*.

In the **Federal Register** of July 15, 2010, in FR Doc. 2010–17285, on page 41167, please make the following correction:

Under **SUPPLEMENTARY INFORMATION**, first column, the second to the last paragraph is corrected to read:

"Nominations are open to all individuals without regard to race, color, religion, sex, national origin, age, mental or physical handicap, marital status, or sexual orientation. Please note, however, that registered lobbyists and individuals already serving on another Federal Advisory Committee are ineligible for nomination."

The deadline for Technical Advisory Committee member nominations is July 30, 2010.

Issued in Washington, DC on July 20, 2010.

Rachel Samuel,

Deputy Committee Management Officer.

[FR Doc. 2010–18127 Filed 7–22–10; 8:45 am]

BILLING CODE 6450–01–P

DEPARTMENT OF ENERGY

Energy Information Administration

Agency Information Collection Activities: Submission for OMB Review; Comment Request

AGENCY: U.S. Energy Information Administration (EIA), Department of Energy (DOE).

ACTION: Agency information collection activities: Submission for OMB review; comment request.

SUMMARY: The EIA has submitted the Energy Information Administration's

Manufacturing Energy Consumption Survey to the Office of Management and Budget (OMB) for review and a three-year extension under section 3507(h)(1) of the Paperwork Reduction Act of 1995 (Pub. L. 104–13) (44 U.S.C. 3501 *et seq.*).

DATES: Comments must be filed by August 23, 2010. If you anticipate that you will be submitting comments but find it difficult to do so within that period, you should contact the OMB Desk Officer for DOE listed below as soon as possible.

ADDRESSES: Send comments to OMB Desk Officer for DOE, Office of Information and Regulatory Affairs, Office of Management and Budget. To ensure receipt of the comments by the due date, submission by FAX (202–395–7285) or e-mail to *Christine_J._Kymn@omb.eop.gov* is recommended. The mailing address is 725 17th Street, NW., Washington, DC 20503. The OMB Desk Officer may be telephoned at (202) 395–4638. (A copy of your comments should also be provided to EIA's Statistics and Methods Group at the address below.)

FOR FURTHER INFORMATION CONTACT: Requests for additional information should be directed to Alethea Jennings. To ensure receipt of the comments by the due date, submission by FAX (202–586–5271) or e-mail (*alethea.jennings@eia.doe.gov*) is also recommended. The mailing address is Statistics and Methods Group (EI–70), Forrestal Building, U.S. Department of Energy, 1000 Independence Ave., SW., Washington, DC 20585–0670. Ms. Jennings may be contacted by telephone at (202) 586–5879.

SUPPLEMENTARY INFORMATION: This section contains the following information about the energy information collection submitted to OMB for review: (1) The collection numbers and title; (2) the sponsor (*i.e.*, the Department of Energy component); (3) the current OMB docket number (if applicable); (4) the type of request (*i.e.*, new, revision, extension or reinstatement); (5) response obligation (*i.e.*, mandatory, voluntary, or required to obtain or retain benefits); (6) a description of the need for and proposed use of the information; (7) a categorical description of the likely respondents; (8) estimated number of respondents and (9) an estimate of the total annual reporting burden (*i.e.,* the estimated number of likely respondents times the proposed frequency of response per year times the average hours per response).

1. Form EIA–846, "Manufacturers Energy Consumption Survey."
2. Energy Information Administration.
3. OMB Number 1905–0169.
4. Three-year extension to an existing approved request.
5. Mandatory.
6. Form EIA–846 will be used to collect data on energy consumption and related subjects for the manufacturing sector of the U.S. economy. In addition to being used for the National Energy Modeling System, the MECS is used to augment a database on the manufacturing sector. Respondents are manufacturing establishments.
7. Business or other for-profit.
8. 15,500.
9. 47,584 (15,500 respondents × 1 response per year × 9.21 hours per response). With a three-year approval, the burden is prorated over the three-year period and averaged from a total of 142,751 hours.

Please refer to the supporting statement as well as the proposed forms and instructions for more information about the purpose, who must report, when to report, where to submit, the elements to be reported, detailed instructions, provisions for confidentiality, and uses (including possible nonstatistical uses) of the information. For instructions on obtaining materials, see the **FOR FURTHER INFORMATION CONTACT** section.

Statutory Authority: Sec. 13(b) of the Federal Energy Administration Act of 1974, Pub. L. 93–275, codified at 15 U.S.C. 772(b).

Issued in Washington, DC, July 19, 2010.

Stephanie Brown,

Director, Statistics and Methods Group, Energy Information Administration.

[FR Doc. 2010–18080 Filed 7–22–10; 8:45 am]

BILLING CODE 6450–01–P

ENVIRONMENTAL PROTECTION AGENCY

[FRL–9179–3]

Clean Water Act Section 303(d): Final Agency Action on One Arkansas Total Maximum Daily Load (TMDL)

AGENCY: Environmental Protection Agency (EPA).

ACTION: Notice of availability.

SUMMARY: This notice announces the final agency action on one TMDL established by EPA Region 6 for waters listed in the State of Arkansas, under section 303(d) of the Clean Water Act (CWA). This TMDL was completed in response to the lawsuit styled *Sierra Club, et al.* v. *Clifford, et al.,* No. LR–C–99–114. Documents from the administrative record file for the final one TMDL, including TMDL calculations may be viewed at *http://www.epa.gov/region6/water/npdes/tmdl/index.htm.*

FOR FURTHER INFORMATION CONTACT: Diane Smith at (214) 665–2145.

EPA Takes Final Agency Action on One TMDL

By this notice EPA is taking final agency action on the following TMDL for waters located within the State of Arkansas:

Segment-reach	Waterbody name	Pollutant
11070208–901	Town Branch	Total Phosphorus.

EPA requested the public to provide EPA with any significant data or information that might impact the TMDL at **Federal Register** Notice: Volume 75, Number 74, pages 20351 and 20352 (April 19, 2010). Comments were received, and the EPA's response to comments and the Final TMDL may be found at *http://www.epa.gov/region6/water/npdes/tmdl/index.htm.*

Dated: July 15, 2010.

Claudia V. Hosch,

Acting Director, Water Quality Protection Division, EPA Region 6.

[FR Doc. 2010–18090 Filed 7–22–10; 8:45 am]

BILLING CODE 6560–50–P

ENVIRONMENTAL PROTECTION AGENCY

[ER–FRL–8991–6]

Environmental Impacts Statements; Notice of Availability

Responsible Agency: Office of Federal Activities, General Information (202) 564–1399 or *http://www.epa.gov/compliance/nepa/.*

Weekly receipt of Environmental Impact Statements.
Filed 07/12/2010 through 07/16/2010.
Pursuant to 40 CFR 1506.9.

Notice

In accordance with Section 309(a) of the Clean Air Act, EPA is required to make its comments on EISs issued by other Federal agencies public. Historically, EPA has met this mandate by publishing weekly notices of availability of EPA comments, which includes a brief summary of EPA's comment letters, in the **Federal Register**. Since February 2008, EPA has been including its comment letters on EISs on its Web site at: *http://www.epa.gov/compliance/nepa/eisdata.html.* Including the entire EIS comment letters on the Web site satisfies the Section 309(a) requirement to make EPA's comments on EISs available to the public. Accordingly, on March 31, 2010, EPA discontinued the publication of the notice of availability of EPA comments in the **Federal Register**.

EIS No. 20100262, Final Supplement, USACE, MS, Pascagoula Harbor Navigation Channel Project, To Construct Congressionally Authorized Widening and Deepening Improvements, to Update the FEIS–1985, Jackson County, MS, *Wait Period Ends:* 08/23/2010, *Contact:* Vechere' Lampley 404–562–5227.

EIS No. 20100263, Final EIS, FHWA, VT, Circ-Williston Transportation Project, Improvements between I–89 and the Towns Williston and Essex and the Village of Essex Junction, City of Burlington, Chittenden County, VT, *Wait Period Ends:* 08/27/2010, *Contact:* Kenneth R. Sikora, Jr. 802–828–4573.

EIS No. 20100264, Draft EIS, WAPA, AZ, Grapevine Canyon Wind Project, Proposal to Develop a Wind Energy Generating Facility up to 500 Megawatts; (2) a 345 kilovolt (kV) Electrical Transmission Tie-Line; and (3) a 345–kV electrical Interconnection Switchyard, Coconino County, AZ, *Comment Period Ends:* 09/07/2010, *Contact:* Matthew Blevins 800–336–7288.

EIS No. 20100265, Draft EIS, NOAA, VI, Amendment 2 to the Fishery Management Plan of Puerto Rico and the U.S. Virgin Islands and Amendment 5 to the Reef Fish Fishery Management Plan of Puerto Rico, Implementation of Annual Catch Limits (ACLs) and Accountability Measures (AMs) for Reef Fish and Queen Conch in the U.S. Caribbean, *Comment Period Ends:* 09/07/2010, *Contact:* Dr. Roy E. Crabtree 727–824–5301.

EIS No. 20100266, Draft EIS, USFS, AK, Resurrection Creek Phase II Stream and Riparian Restoration Project and Hope Mining Company, Proposed Mining Plan of Operations, Seward Ranger District, Chugach National Forest, Kenai Peninsula Borough, Alaska, *Comment Period Ends:* 09/07/2010, *Contact:* Bill MacFarlane 907–743–9434.

EIS No. 20100267, Final EIS, FTA, UT, Draper Transit Corridor Project, To Improve Transportation Mobility and Connectivity for Residents and Commuters in the Project Study Area, Salt Lake County, UT, *Wait Period Ends:* 08/23/2010, *Contact:* Kritin Kenyon 720–963–3300.

EIS No. 20100268, Draft EIS, NRC, ID, Eagle Rock Enrichment Facility, Construct, Operate, and Decommission, Proposed Facility would Enrich Uranium for Use in Commercial Nuclear Fuel for Power Reactors, Bonneville County, ID, *Comment Period Ends:* 09/13/2010, *Contact:* Stephen Lemont 301–415–5163.

EIS No. 20100269, Final EIS, USAF, ND, Grand Forks Air Force Base Project, Beddown and Flight Operations of Remotely Piloted Aircraft, Base Realignment and Closure, (BRAC), ND, *Wait Period Ends:* 08/23/2010, *Contact:* Doug Allbright 618–229–0841.

EIS No. 20100270, Draft EIS, USACE, MO, Missouri River Commercial Dredging, Proposal to Extract Sand and Gravel from the Missouri River, U.S. Corp of Engineer's Section 10 and 404 Permits, Kansas City, Central Missouri and Greater St. Louis, Missouri, *Comment Period Ends:* 09/07/2010, *Contact:* Cody Wheeler 816–389–3739.

Amended Notices

EIS No. 20100230, Final EIS, FTA, HI, Honolulu High-Capacity Transit Corridor Project, Provide High-Capacity Transit Service on O'ahu from University of Hawaii-West O'ahu to the Ala Moana Center, City and County of Honolulu, O'ahu, Hawaii, *Wait Period Ends:* 08/16/2010, *Contact:* Ted Matley 415–744–3133. Revision to FR Notice Published 6/25/2010: Correction to Title and Extending the Wait Period from 07/26/2010 to 08/16/2010.

EIS No. 20100255, Draft EIS, NPS, WA, Ross Lake National Recreation Area Project, General Management Plan, Implementation, Skagit and Whatcom Counties, WA, *Comment Period Ends:* 09/30/2010, *Contact:*Roy Zipp 360–873–4590 Ext 31. Revision to FR Notice Published 7/06/2010: Correction to Comment Period from 9/10/2010 to 9/30/2010.

Dated: July 20, 2010.

Robert W. Hargrove,

Director, NEPA Compliance Division, Office of Federal Activities.

[FR Doc. 2010–18100 Filed 7–22–10; 8:45 am]

BILLING CODE 6560–50–P

ENVIRONMENTAL PROTECTION AGENCY

[FRL–9179–2]

Science Advisory Board Staff Office; Notification of a Public Teleconference of the Environmental Engineering Committee

AGENCY: Environmental Protection Agency (EPA).

ACTION: Notice.

SUMMARY: The EPA Science Advisory Board (SAB) Staff Office announces a public teleconference of the SAB Environmental Engineering Committee (EEC) to receive briefings regarding EPA's research activities associated with innovation and use of lifecycle analysis in technology development, carbon sequestration, and sustainability.

DATES: The EEC will conduct a public teleconference on August 16, 2010. The teleconference will begin at 1 p.m. and end by 4:30 p.m. (Eastern Daylight Time).

ADDRESSES: The teleconference will be conducted by telephone only.

FOR FURTHER INFORMATION CONTACT: Any member of the public wishing to obtain general information concerning the public teleconference may contact Mr. Edward Hanlon, Designated Federal Officer (DFO), via telephone at (202) 564–2134 or e-mail at *hanlon.edward@epa.gov.* General information about the EEC can be found on the EPA SAB Web site at *http://www.epa.gov/sab.*

SUPPLEMENTARY INFORMATION: Pursuant to the Federal Advisory Committee Act (FACA), 5 U.S.C., App. 2, notice is hereby given that the SAB Environmental Engineering Committee (EEC) will hold a public teleconference to receive briefings regarding the current status of EPA's research activities associated with innovation and use of lifecycle analysis in technology development, carbon sequestration, and sustainability. The EEC was established to provide independent advice to the EPA Administrator, through the chartered SAB, on risk management technologies to control and prevent pollution. The EEC is a Federal

Advisory Subcommittee under FACA. The EEC will provide advice through the chartered SAB and will comply with the provisions of FACA and all appropriate SAB Staff Office procedural policies.

Background: EPA has a goal to develop and apply environmental technologies that are used to support environmental protection in a manner that increases efficiency. EPA is considering how to promote innovation within EPA and in the public and private sector so that technologies are more efficient. EPA is also considering how to bring lifecycle analysis (LCA) into the EPA's practices and procedures in support of EPA's efforts to produce, generate and develop environmental technologies. EPA is considering how to potentially apply LCA to achieve these objectives and goals. The EEC will receive briefings regarding the current status of EPA's research activities associated with innovation and use of lifecycle analysis in technology development.

Also, EPA is conducting research to evaluate the technical aspects of carbon dioxide geologic sequestration. EPA released guidance for pilot geologic sequestration projects in March, 2007. This guidance only addresses experimental pilot projects anticipated over the next several years. The EEC will receive briefings regarding the current status of EPA's research activities associated with carbon sequestration.

In addition, in 2007, the EEC through the chartered SAB provided advice on EPA's Draft Sustainability Research Strategy and multi-year research plan developed by EPA's Office of Research and Development (ORD). The strategy proposed a scientific framework for a more systematic and holistic approach to environmental protection that takes into consideration the complex nature of environmental issues and the welfare of future generations, and the multi-year research plan described ORD's research to meet the short-term and long-term goals of the Research Strategy. The EEC will receive briefings regarding the current status of EPA's research activities associated with sustainability. SAB's June 2007 *Advisory on the Office of Research and Development's (ORD) Sustainability Research Strategy and the Science and Technology for Sustainability Multi-year Plan* is available on the SAB Web site at *http://yosemite.epa.gov/sab/sabproduct.nsf/02ad90b136fc21ef85256eba00436459/883382937a4656cc85256fa8004e14a2!OpenDocument*.

Technical Contacts: The EPA technical contact for EPA's research activities associated with innovation and use of lifecycle analysis in technology development is Ms. Minerva Rojo at (202) 564–7356 or *rojo.minerva@epa.gov*. The ORD technical contact for carbon sequestration research is Dr. David Jewett at (580) 436–8560 or *jewett.david@epa.gov*. The EPA Office of Water technical contact for carbon sequestration research is Dr. Ann Codrington at (202) 564–4688 or *codrington.ann@epa.gov*. The ORD technical contact for sustainability is Dr. Alan Hecht at (202) 564–4772 or *hecht.alan@epa.gov*.

Availability of Meeting Materials: The meeting materials, including the review materials and meeting agenda for the August 16, 2010 teleconference, will be posted to the SAB Web site at *http://www.epa.gov/sab* prior to the meeting.

Procedures for Providing Public Input: Interested members of the public may submit relevant written or oral information for the EEC to consider on the topics of this advisory activity. *Oral Statements:* In general, individuals or groups requesting an oral presentation at a teleconference meeting will be limited to three minutes per speaker. Interested parties should contact Mr. Hanlon at the contact information provided above by August 9, 2010, to be placed on the public speaker list for the August 16, 2010 teleconference call. *Written Statements:* Written statements should be received in the SAB Staff Office by August 9, 2010, so that the information can be made available to the EEC for their consideration prior to the meeting. Written statements should be supplied to Mr. Hanlon in the following formats: One hard copy with original signature and one electronic copy via e-mail (acceptable file format: Adobe Acrobat PDF, MS Word, WordPerfect, MS PowerPoint, or Rich Text files). Submitters are asked to provide electronic versions of each document submitted with *and* without signatures, because the SAB Staff Office does not publish documents with signatures on its Web sites.

Accessibility: For information on access or services for individuals with disabilities, please contact Mr. Hanlon at (202) 564–2134 or e-mail at *hanlon.edward@epa.gov*, preferably at least ten (10) days prior to the meeting, to give EPA as much time as possible to process your request.

Dated: July 16, 2010.

Anthony F. Maciorowski,

Deputy Director, EPA Science Advisory Board Staff Office.

[FR Doc. 2010–18101 Filed 7–22–10; 8:45 am]

BILLING CODE 6560–50–P

ENVIRONMENTAL PROTECTION AGENCY

[EPA–HQ–OPP–2010-0194; FRL–8834–7]

Tetrahedron, Inc., with Subcontractors: Syracuse Research Corporation; Tox Path, Inc; and Pathology Associates; Transfer of Data

AGENCY: Environmental Protection Agency (EPA).

ACTION: Notice.

SUMMARY: This notice announces that pesticide related information submitted to EPA's Office of Pesticide Programs (OPP) pursuant to the Federal Insecticide, Fungicide, and Rodenticide Act (FIFRA) and the Federal Food, Drug, and Cosmetic Act (FFDCA), including information that may have been claimed as confidential business information (CBI) by the submitter, will be transferred to Tetrahedron, Inc., and its subcontractors: Syracuse Research Corporation, Tox Path, Inc., and Pathology Associates, in accordance with 40 CFR 2.307(h)(3) and 2.308(i)(2). Tetrahedron, Inc., and its subcontractors: Syracuse Research Corporation, Tox Path, Inc., and Pathology Associates, have been awarded a contract to perform work for OPP, and access to this information will enable Tetrahedron, Inc., and its subcontractors: Syracuse Research Corporation, Tox Path, Inc., and Pathology Associates, to fulfill the obligations of the contract.

DATES: Tetrahedron, Inc., and its subcontractors: Syracuse Research Corporation, Tox Path, Inc., and Pathology Associates, will be given access to this information on or before July 28, 2010.

FOR FURTHER INFORMATION CONTACT: Felicia Croom, Information Technology and Resources Management Division (7502P), Office of Pesticide Programs, Environmental Protection Agency, 1200 Pennsylvania Ave., NW., Washington, DC 20460–0001; telephone number: (703) 305–0786; e-mail address: *croom.felicia@epa.gov*.

SUPPLEMENTARY INFORMATION:

I. General Information

A. Does this Action Apply to Me?

This action applies to the public in general. As such, the Agency has not attempted to describe all the specific entities that may be affected by this action. If you have any questions regarding the applicability of this action to a particular entity, consult the person listed under **FOR FURTHER INFORMATION CONTACT**.

B. How Can I Get Copies of this Document and Other Related Information?

EPA has established a docket for this action under docket identification (ID) number EPA–HQ–OPP–2010–0194. Publicly available docket materials are available either in the electronic docket at *http://www.regulations.gov*, or, if only available in hard copy, at the Office of Pesticide Programs (OPP) Regulatory Public Docket in Rm. S–4400, One Potomac Yard (South Bldg.), 2777 S. Crystal Dr., Arlington, VA. The hours of operation of this Docket Facility are from 8:30 a.m. to 4 p.m., Monday through Friday, excluding legal holidays. The Docket Facility's telephone number is (703) 305–5805.

II. Contractor Requirements

Under Contract No. EP–W–10–013, Tetrahedron, Inc., and its subcontractors: Syracuse Research Corporation, Tox Path, Inc., and Pathology Associates, will perform toxicology studies for pesticides as specified by EPA's Health Effects Division's (HED), Data Evaluation Reports (DERs). The contractors will review Subdivision F, Pesticide Assessment Guidelines, and provide revisions as necessary. The contractors shall be regarded, and act as the government's subject matter experts, as necessary in reviewing, reporting, researching, and evaluating DERs, guidelines, and other documentation as directed by the government.

EPA has determined that access by Tetrahedron, Inc., and its subcontractors: Syracuse Research Corporation, Tox Path, Inc., and Pathology Associates, to information on all pesticide chemicals is necessary for the performance of this contract.

Some of this information may be entitled to confidential treatment. The information has been submitted to EPA under sections 3, 4, 6, and 7 of FIFRA and under sections 408 and 409 of FFDCA.

In accordance with the requirements of 40 CFR 2.307(h)(2), the contract with Tetrahedron, Inc., and its subcontractors: Syracuse Research Corporation, Tox Path, Inc., and Pathology Associates, prohibits use of the information for any purpose not specified in the contract; prohibits disclosure of the information to a third party without prior written approval from the Agency; and requires that each official and employee of the contractor sign an agreement to protect the information from unauthorized release and to handle it in accordance with the *FIFRA Information Security Manual*. In addition, Tetrahedron, Inc., and its subcontractors: Syracuse Research Corporation, Tox Path, Inc., and Pathology Associates, are required to submit, for EPA approval, a security plan under which any CBI will be secured and protected against unauthorized release or compromise. No information will be provided to Tetrahedron, Inc., and its subcontractors: Syracuse Research Corporation, Tox Path, Inc., and Pathology Associates, until the requirements in this document have been fully satisfied. Records of information provided to Tetrahedron, Inc., and its subcontractors: Syracuse Research Corporation, Tox Path, Inc., and Pathology Associates, will be maintained by EPA's project officers for this contract. All information supplied to Tetrahedron, Inc., and its subcontractors: Syracuse Research Corporation, Tox Path, Inc., and Pathology Associates, by EPA for use in connection with this contract will be returned to EPA when Tetrahedron, Inc., and its subcontractors: Syracuse Research Corporation, Tox Path, Inc., and Pathology Associates, have completed their work.

List of Subjects

Environmental protection, Business and industry, Government contracts, Government property, Security measures.

Dated: July 15, 2010.

Oscar Morales,

Acting Director, Office of Pesticide Programs.

[FR Doc. 2010–18095 Filed 7–22–10; 8:45 am]

BILLING CODE 6560–50–S

FEDERAL COMMUNICATIONS COMMISSION

Notice of Public Information Collection(s) Being Submitted for Review and Approval to the Office of Management and Budget (OMB), Comments Requested

July 20, 2010.

SUMMARY: The Federal Communications Commission, as part of its continuing effort to reduce paperwork burden invites the general public and other Federal agencies to take this opportunity to comment on the following information collection(s), as required by the Paperwork Reduction Act (PRA) of 1995, 44 U.S.C. 3501 – 3520. Comments are requested concerning: (a) whether the proposed collection of information is necessary for the proper performance of the functions of the Commission, including whether the information shall have practical utility; (b) the accuracy of the Commission's burden estimate; (c) ways to enhance the quality, utility, and clarity of the information collected; (d) ways to minimize the burden of the collection of information on the respondents, including the use of automated collection techniques or other forms of information technology; and (e) ways to further reduce the information collection burden for small business concerns with fewer than 25 employees.

The FCC may not conduct or sponsor a collection of information unless it displays a currently valid control number. No person shall be subject to any penalty for failing to comply with a collection of information subject to the Paperwork Reduction Act (PRA) that does not display a currently valid OMB control number.

DATES: Written Paperwork Reduction Act (PRA) comments should be submitted on or before August 23, 2010. If you anticipate that you will be submitting PRA comments, but find it difficult to do so within the period of time allowed by this notice, you should advise the FCC contact listed below as soon as possible.

ADDRESSES: Direct all PRA comments to Nicholas A. Fraser, Office of Management and Budget, via fax at 202–395–5167 or via the Internet at Nicholas_A._Fraser@omb.eop.gov and to the Federal Communications Commission via email to PRA@fcc.gov. To view a copy of this information collection request (ICR) submitted to OMB: (1) Go to the web page http://reginfo.gov/public/do/PRAMain, (2) look for the section of the web page called "Currently Under Review", (3) click on the downward–pointing arrow in the "Select Agency" box below the "Currently Under Review" heading, (4) select "Federal Communications Commission" from the list of agencies presented in the "Select Agency" box, (5) click the "Submit" button to the right of the "Select Agency" box, and (6) when the list of FCC ICRs currently under review appears, look for the title of this ICR (or its OMB Control Number, if there is one) and then click on the ICR Reference Number to view detailed information about this ICR.

FOR FURTHER INFORMATION CONTACT: Judith B. Herman, Office of Managing Director, (202) 418–0214. For additional information or copies of the information collection(s), contact Judith B. Herman, OMD, 202–418–0214 or email judith–b.herman@fcc.gov.

SUPPLEMENTARY INFORMATION:

OMB Control Number: 3060–0398.

Title: Sections 2.948 and 15.117(g)(2), Equipment Authorization Measurement Standards.

Form Number: N/A.

Type of Review: Revision of a currently approved collection.

Respondents: Business or other for–profit.

Number of Respondents and Responses: 725 respondents; 725 responses.

Estimated Time per Response: 5 hours – 30 hours.

Frequency of Response: On occasion and every three year reporting requirement and recordkeeping requirement.

Obligation to Respond: Required to obtain or retain benefits. Statutory authority for this information collection is contained in 47 CFR sections 4(i), 302, 303(c), 303(f), 303(g), 303(r), and 309(a).

Total Annual Burden: 21,160 hours.

Total Annual Cost: N/A.

Privacy Act Impact Assessment: N/A.

Nature and Extent of Confidentiality: There is a minimal exemption from the Freedom of Information Act (FOIA), 5 U.S.C. 552(b)(4), 47 CFR 0.459(d) of the Commission's rules, that is granted for trade secrets, which may be submitted to the Commission as part of the documentation of the test results. No other assurances of confidentiality are provided to respondents.

Needs and Uses: The Commission is now requesting a revision (program change) and an adjustment of the burden estimates for this information collection. The reporting requirements for accreditation bodies is being added and the number of testing facilities filing a test site description is being increased. The latter increase is necessary to reflect the significant number of laboratories filing test site descriptions. This increase has been observed in the recent past, and is in large part due to Mutual Recognition Agreements (MRAs) signed by various foreign economic entities that allow for the testing of equipment in these MRA partner economies, by testing facilities filing site descriptions under 47 CFR 2.948 of the Commission's rules, prior to submittal of equipment for authorization. A change in the Commission's burden estimates is therefore being requested.

The Commission will submit this revised information collection to the Office of Management and Budget (OMB) during this comment period to obtain the full three year clearance from them. The Commission is reporting a 60 hour program change increase and a 12,000 hour increase adjustment.

Federal Communications Commission.

Marlene H. Dortch,

Secretary,

Office of the Secretary,

Office of Managing Director.

[FR Doc. 2010–18004 Filed 7–22–10; 8:45 am]

BILLING CODE 6712–01–S

FEDERAL COMMUNICATIONS COMMISSION

Federal Advisory Committee Act; Emergency Response Interoperability Center Public Safety Advisory Committee

AGENCY: Federal Communications Commission.

ACTION: Notice of intent to establish.

SUMMARY: In accordance with the Federal Advisory Committee Act, the purpose of this notice is to announce that a Federal Advisory Committee, known as the "Emergency Response Interoperability Center Public Safety Advisory Committee" (hereinafter the "Committee"), is being established.

ADDRESSES: Federal Communications Commission, Public Safety and Homeland Security Bureau, Attn: Gene Fullano, 445 12th Street, SW., Room 7–C738, Washington, DC 20554.

FOR FURTHER INFORMATION CONTACT: Gene Fullano, Federal Communications Commission, Public Safety and Homeland Security Bureau, 445 12th Street, SW., Room 7–C738, Washington, DC 20554. Telephone: (202) 418–0492, e-mail: *genaro.fullano@fcc.gov.*

SUPPLEMENTARY INFORMATION: The Chairman of the Federal Communications Commission has determined that the establishment of the Committee is necessary and in the public interest in connection with the performance of duties imposed on the Federal Communications Commission ("FCC" or "Commission") by law. The Committee Management Secretariat, General Services Administration concurs with the establishment of the Committee. The purpose of the Committee is to make recommendations that will assist the Commission's Emergency Response Interoperability Center (ERIC), an entity established within the Public Safety and Homeland Security Bureau, in the development of a technical framework and requirements for interoperability in order to ensure that the public safety wireless broadband network is interoperable on a nationwide basis. In particular, the Committee will provide recommendations to the Commission that would assist ERIC as it implements the following policy objectives: (1) The adoption of technical and operational requirements and procedures to ensure a nationwide level of interoperability; (2) the adoption and implementation of requirements and procedures to address operability, roaming, priority access, gateway functions and interfaces, the interconnectivity of public safety broadband networks, and other matters related to the functioning of the nationwide public safety broadband network; (3) the adoption of authentication and encryption requirements for common public safety broadband applications and network use; (4) the coordination of ERIC's policies with other entities, including other Federal agencies; and (5) such other policies for which ERIC may have responsibilities from time to time.

Marlene H. Dortch,

Secretary, Federal Communications Commission.

[FR Doc. 2010–18112 Filed 7–22–10; 8:45 am]

BILLING CODE 6712–01–P

FEDERAL RESERVE SYSTEM

Change in Bank Control Notices; Acquisition of Shares of Bank or Bank Holding Companies

The notificants listed below have applied under the Change in Bank Control Act (12 U.S.C. 1817(j)) and § 225.41 of the Board's Regulation Y (12 CFR 225.41) to acquire a bank or bank holding company. The factors that are considered in acting on the notices are set forth in paragraph 7 of the Act (12 U.S.C. 1817(j)(7)).

The notices are available for immediate inspection at the Federal Reserve Bank indicated. The notices also will be available for inspection at the office of the Board of Governors. Interested persons may express their views in writing to the Reserve Bank indicated for that notice or to the offices of the Board of Governors. Comments must be received not later than August 9, 2010.

A. Federal Reserve Bank of Atlanta (Clifford Stanford, Vice President) 1000 Peachtree Street, N.E., Atlanta, Georgia 30309:

1. Mark Van Smith, Savannah, Georgia; to acquire additional voting shares of First Citizens Bankshares, Inc., and thereby inidrectly acquire additional voting shares of First Citizens Bank, both of Glennville, Georgia.

Board of Governors of the Federal Reserve System, July 20, 2010.

Robert deV. Frierson,

Deputy Secretary of the Board.

[FR Doc. 2010–18054 Filed 7–22–10; 8:45 am]

BILLING CODE 6210–01–S

FEDERAL RESERVE SYSTEM

Formations of, Acquisitions by, and Mergers of Bank Holding Companies

The companies listed in this notice have applied to the Board for approval, pursuant to the Bank Holding Company Act of 1956 (12 U.S.C. 1841 *et seq.*) (BHC Act), Regulation Y (12 CFR Part 225), and all other applicable statutes and regulations to become a bank holding company and/or to acquire the assets or the ownership of, control of, or the power to vote shares of a bank or bank holding company and all of the banks and nonbanking companies owned by the bank holding company, including the companies listed below.

The applications listed below, as well as other related filings required by the Board, are available for immediate inspection at the Federal Reserve Bank indicated. The applications also will be available for inspection at the offices of the Board of Governors. Interested persons may express their views in writing on the standards enumerated in the BHC Act (12 U.S.C. 1842(c)). If the proposal also involves the acquisition of a nonbanking company, the review also includes whether the acquisition of the nonbanking company complies with the standards in section 4 of the BHC Act (12 U.S.C. 1843). Unless otherwise noted, nonbanking activities will be conducted throughout the United States. Additional information on all bank holding companies may be obtained from the National Information Center website at *www.ffiec.gov/nic/*.

Unless otherwise noted, comments regarding each of these applications must be received at the Reserve Bank indicated or the offices of the Board of Governors not later than August 9, 2010.

A. Federal Reserve Bank of Kansas City (Dennis Denney, Assistant Vice President) 1 Memorial Drive, Kansas City, Missouri 64198–0001:

1. Manhattan Banking Corporation, Manhattan, Kansas; to acquire an additional 4.05 percent, for a total of 9.9 percent, of the voting shares of Sonoran Bank, N.A., Phoenix, Arizona.

Board of Governors of the Federal Reserve System, July 20, 2010.

Robert deV. Frierson,

Deputy Secretary of the Board.

[FR Doc. 2010–18055 Filed 7–22–10; 8:45 am]

BILLING CODE 6210–01–S

GENERAL SERVICES ADMINISTRATION

[OMB Control No. 3090–00XX; Docket No. 2010–0002; Sequence 18]

Information Collection; OMB Control No. 3090–00XX; FFATA Subaward and Executive Compensation Reporting Requirements

AGENCY: Office of Technology Strategy/Office of Governmentwide Policy, General Services Administration (GSA).

ACTION: Notice of request for public comments regarding a new OMB information clearance.

SUMMARY: Under the provisions of the Paperwork Reduction Act of 1995 (44 U.S.C. Chapter 35), the Regulatory Secretariat will be submitting to the Office of Management and Budget (OMB) a request to review and approve an emergency new information collection requirement regarding FFATA Subaward and Executive Compensation Reporting Requirements.

Public comments are particularly invited on: Whether this collection of information is necessary for the proper performance of functions of the FFATA Subaward and Executive Compensation Reporting Requirements, whether it will have practical utility; whether our estimate of the public burden of this collection of information is accurate, and based on valid assumptions and methodology; ways to enhance the quality, utility, and clarity of the information to be collected; and ways in which we can minimize the burden of the collection of information on those who are to respond, through the use of appropriate technological collection techniques or other forms of information technology.

DATES: Submit comments on or before September 21, 2010.

ADDRESSES: Submit comments identified by Information Collection 3090–00XX, FFATA Subaward and Executive Compensation Reporting Requirements by any of the following methods:

- *Regulations.gov: http://www.regulations.gov.* Submit comments via the Federal eRulemaking portal by inputting "Information Collection 3090–XXXX, FFATA Subaward and Executive Compensation Reporting Requirements" under the heading "Enter Keyword or ID" and selecting "Search". Select the link "Submit a Comment" that corresponds with "Information Collection 3090–XXXX, FFATA Subaward and Executive Compensation Reporting Requirements". Follow the instructions provided at the "Submit a Comment" screen. Please include your name, company name (if any), and "Information Collection 3090–XXXX, FFATA Subaward and Executive Compensation Reporting Requirements" on your attached document.
- *Fax:* 202–501–4067.
- *Mail:* General Services Administration, Regulatory Secretariat (MVCB), 1800 F Street, NW., Room 4041, Washington, DC 20405. ATTN: Hada Flowers/IC 3090–XXXX.

Instructions: Please submit comments only and cite Information Collection 3090–XXXX, FFATA Subaward and Executive Compensation Reporting Requirements, in all correspondence related to this collection. All comments received will be posted without change to *http://www.regulations.gov,* including any personal and/or business confidential information provided.

FOR FURTHER INFORMATION CONTACT: Ms. Janice Miller, Program Analyst, Office of Technology Strategy/Office of Governmentwide Policy, GSA, at *jan.miller@gsa.gov.*

SUPPLEMENTARY INFORMATION:

A. Purpose

The Federal Funding Accountability and Transparency Act of 2006, Public Law 109–282 (Transparency Act) requires information disclosure of entities receiving Federal financial assistance through Federal awards such as Federal contracts, sub-contracts, grants and sub-grants, FFATA § 2(a), (2), (i), (ii). Beginning October 1, 2010, this Paperwork Reduction Act submission directs compliance with the Transparency Act to report prime and first-tier subaward data. Specifically, Federal agencies and prime awardees of grants will ensure disclosure of executive compensation of both prime and subawardees and subaward data. This information collection requires reporting of only the information enumerated under the Transparency Act.

B. Annual Reporting Burden

Respondents: 49,308.
Responses per Respondent: 10.
Hours per Response: 2.
Total Burden Hours: 986,160.
Obtaining Copies of Proposals: Requesters may obtain a copy of the information collection documents from the General Services Administration, Regulatory Secretariat (MVCB), 1800 F Street, NW., Room 4041, Washington, DC 20405, telephone (202) 501–4755. Please cite OMB Control No. 3090–XXXX, FFATA Subaward and Executive Compensation Reporting Requirements, in all correspondence.

Dated: July 20, 2010.

Daryle M. Seckar,

Acting Chief Information Officer.

[FR Doc. 2010–18135 Filed 7–22–10; 8:45 am]

BILLING CODE 6820–WY–P

GENERAL SERVICES ADMINISTRATION

[OMB Control No. 3090–00XX; Docket No. 2010–0002; Sequence 20]

Information Collection; Central Contractor Registration Requirements for Prime Grant Recipients

AGENCY: Office of Technology Strategy/Office of Governmentwide Policy, General Services Administration (GSA).

ACTION: Notice of request for public comments regarding a new OMB information clearance.

SUMMARY: Under the provisions of the Paperwork Reduction Act of 1995 (44 U.S.C. Chapter 35), the Regulatory Secretariat will be submitting to the Office of Management and Budget (OMB) a request to review and approve an emergency new information collection requirement regarding Central Contractor Registration Requirements for Prime Grant Recipients.

Public comments are particularly invited on: Whether this collection of information is necessary for the proper performance of functions of the Central Contractor Registration Requirements for Prime Grant Recipients, whether it will have practical utility; whether our estimate of the public burden of this collection of information is accurate, and based on valid assumptions and methodology; ways to enhance the quality, utility, and clarity of the information to be collected; and ways in which we can minimize the burden of the collection of information on those who are to respond, through the use of appropriate technological collection techniques or other forms of information technology.

DATES: Submit comments on or before September 21, 2010.

ADDRESSES: Submit comments identified by Information Collection 3090–00XX, Central Contractor Registration Requirements for Prime Grant Recipients by any of the following methods:

- *Regulations.gov: http://www.regulations.gov.*

Submit comments via the Federal eRulemaking portal by inputting "Information Collection 3090–XXXX, Central Contractor Registration Requirements for Prime Grant Recipients" under the heading "Enter Keyword or ID" and selecting "Search". Select the link "Submit a Comment" that corresponds with "Information Collection 3090–XXXX, Central Contractor Registration Requirements for Prime Grant Recipients". Follow the instructions provided at the "Submit a Comment" screen. Please include your name, company name (if any), and "Information Collection 3090–XXXX, Central Contractor Registration Requirements for Prime Grant Recipients" on your attached document.

- *Fax:* 202–501–4067.
- *Mail:* General Services Administration, Regulatory Secretariat (MVCB), 1800 F Street, NW., Room 4041, Washington, DC 20405. ATTN: Hada Flowers/IC 3090–XXXX.

Instructions: Please submit comments only and cite Information Collection 3090–XXXX, Central Contractor Registration Requirements for Prime Grant Recipients, in all correspondence related to this collection. All comments received will be posted without change to *http://www.regulations.gov*, including any personal and/or business confidential information provided.

FOR FURTHER INFORMATION CONTACT: Ms. Janice Miller, Program Analyst, Office of Technology Strategy/Office of Governmentwide Policy, at *jan.miller@gsa.gov.*

SUPPLEMENTARY INFORMATION:

A. Purpose

This information collection requires information necessary for prime awardee registration into the FFATA Subaward Reporting System (FSRS) and review of its entity-related information. This will allow for prime awardee reporting of subaward and executive compensation data pursuant to the Federal Funding Accountability and Transparency Act (FFATA, or Transparency Act). This information collection requires that all prime grant awardees, subject to reporting under the Transparency Act register and maintain their registration in CCR.

B. Annual Reporting Burden

Respondents: 23,358.
Responses Per Respondent: 1.
Hours per Response: 1.
Total Burden Hours: 23,358.

Obtaining Copies Of Proposals: Requesters may obtain a copy of the information collection documents from the General Services Administration, Regulatory Secretariat (MVCB), 1800 F Street, NW., Room 4041, Washington, DC 20405, telephone (202) 501–4755. Please cite OMB Control No. 3090–XXXX, Central Contractor Registration Requirements for Prime Grant Recipients, in all correspondence.

Dated: July 20, 2010.

Daryle M. Seckar,

Acting Chief Information Officer.

[FR Doc. 2010–18138 Filed 7–22–10; 8:45 am]

BILLING CODE 6820–WY–P

GENERAL SERVICES ADMINISTRATION

[OMB Control No. 3090–00XX; Docket No. 2010–0002; Sequence 19]

Information Collection; OMB Control No. 3090–00XX; FSRS Registration and Prime Awardee Entity-Related Information Reporting Requirements

AGENCY: Office of Technology Strategy/Office of Governmentwide Policy, General Services Administration (GSA).

ACTION: Notice of request for public comments regarding a new OMB information clearance.

SUMMARY: Under the provisions of the Paperwork Reduction Act of 1995 (44 U.S.C. Chapter 35), the Regulatory Secretariat will be submitting to the Office of Management and Budget (OMB) a request to review and approve an emergency new information collection requirement regarding FSRS Registration and Prime Awardee Entity-Related Information Reporting Requirements.

Public comments are particularly invited on: Whether this collection of information is necessary for the proper performance of functions of the FSRS Registration and Prime Awardee Entity-Related Information Reporting Requirements, whether it will have practical utility; whether our estimate of the public burden of this collection of information is accurate, and based on valid assumptions and methodology; ways to enhance the quality, utility, and clarity of the information to be collected; and ways in which we can minimize the burden of the collection of information on those who are to respond, through the use of appropriate technological collection techniques or other forms of information technology.

DATES: Submit comments on or before September 21, 2010.

ADDRESSES: Submit comments identified by Information Collection 3090–00XX, FSRS Registration and Prime Awardee Entity-Related Information by any of the following methods:

- *Regulations.gov: http://www.regulations.gov.* Submit comments via the Federal eRulemaking portal by inputting "Information Collection 3090–XXXX, FSRS Registration and Prime Awardee Entity-Related Information

Reporting Requirements" under the heading "Enter Keyword or ID" and selecting "Search". Select the link "Submit a Comment" that corresponds with "Information Collection 3090–XXXX, FSRS Registration and Prime Awardee Entity-Related Information Reporting Requirements." Follow the instructions provided at the "Submit a Comment" screen. Please include your name, company name (if any), and "Information Collection 3090–XXXX, FSRS Registration and Prime Awardee Entity-Related Information Reporting Requirements" on your attached document.

- *Fax:* 202–501–4067.
- *Mail:* General Services Administration, Regulatory Secretariat (MVCB), 1800 F Street, NW., Room 4041, Washington, DC 20405. ATTN: Hada Flowers/IC 3090–XXXX.

Instructions: Please submit comments only and cite Information Collection 3090–XXXX, FSRS Registration and Prime Awardee Entity-Related Information Reporting Requirements, in all correspondence related to this collection. All comments received will be posted without change to *http://www.regulations.gov,* including any personal and/or business confidential information provided.

FOR FURTHER INFORMATION CONTACT: Ms. Janice Miller, Program Analyst, Office of Technology Strategy/Office of Governmentwide Policy, GSA, at *jan.miller@gsa.gov.*

SUPPLEMENTARY INFORMATION:

A. Purpose

The Federal Funding Accountability and Transparency Act of 2006, Public Law 109–282 (Transparency Act) requires information disclosure of entities receiving Federal financial assistance through Federal awards such as Federal contracts, sub-contracts, grants and sub-grants, FFATA section 2(a),(2),(i),(ii). Beginning October 1, 2010, this Paperwork Reduction Act submission directs compliance with the Transparency Act to report prime and first-tier sub-award data. Federal agencies and prime awardees will ensure disclosure of Federal contract and grant sub-award and compensation data. This information collection requires information necessary for prime awardee registration into the FFATA Subaward Reporting System (FSRS) and review of its entity-related information, at *http://www.fsrs.gov.* An entity may be required to provide information to include:

- DUNS number.
- Name and address of entity.
- Parent DUNS number.
- Federal Award Identification Number (FAIN).
- CFDA Number.
- Federal Awarding Agency of the Grant.

If a prime awardee has already registered in the system to report contracts-related Transparency Act financial data, a new log-in will not be required.

B. Annual Reporting Burden

Respondents: 49,308.
Responses per Respondent: 1.
Hours per Response: .5 hr.
Total Burden Hours: 24,645.
Obtaining Copies of Proposals: Requesters may obtain a copy of the information collection documents from the General Services Administration, Regulatory Secretariat (MVCB), 1800 F Street, NW., Room 4041, Washington, DC 20405, telephone (202) 501–4755. Please cite OMB Control No. 3090–XXXX, FSRS Registration and Prime Awardee Entity-Related Information Reporting Requirements, in all correspondence.

Dated: July 20, 2010.

Daryle M. Seckar,

Acting Chief Information Officer.

[FR Doc. 2010–18136 Filed 7–22–10; 8:45 am]

BILLING CODE 6820–WY–P

DEPARTMENT OF HEALTH AND HUMAN SERVICES

Centers for Medicare & Medicaid Services

[Document Identifier: CMS–R–249, CMS–1561 and CMS–R–308]

Agency Information Collection Activities: Proposed Collection; Comment Request

AGENCY: Centers for Medicare & Medicaid Services.

In compliance with the requirement of section 3506(c)(2)(A) of the Paperwork Reduction Act of 1995, the Centers for Medicare & Medicaid Services (CMS) is publishing the following summary of proposed collections for public comment. Interested persons are invited to send comments regarding this burden estimate or any other aspect of this collection of information, including any of the following subjects: (1) The necessity and utility of the proposed information collection for the proper performance of the agency's functions; (2) the accuracy of the estimated burden; (3) ways to enhance the quality, utility, and clarity of the information to be collected; and (4) the use of automated collection techniques or other forms of information technology to minimize the information collection burden.

1. *Type of Information Collection Request:* Extension of a currently approved collection; *Title of Information Collection:* Hospice Cost and Data Report and supporting regulations 42 CFR 413.20 and 42 CFR 413.24; *Use:* In accordance with sections 1815(a), 1833(e), and 1861(v)(A)(ii) of the Social Security Act, providers of service in the Medicare program are required to submit annual information to achieve reimbursement for health care services rendered to Medicare beneficiaries. In addition, 42 CFR 413.20(b) sets forth that cost reports will be required from providers on an annual basis. Such cost reports are required to be filed with the provider's fiscal intermediary (FI) or Medicare Administrative Contractor (MAC) no later than the last day of the fifth month following the close of the period covered by the report. *Form Number:* CMS–R–249 (OMB#: 0938–0758); *Frequency:* Yearly; *Affected Public:* Business or other for-profits and not-for-profit institutions; *Number of Respondents:* 2,303; Total *Annual Responses:* 2,303; *Total Annual Hours:* 405,328. (For policy questions regarding this collection contact Gail Duncan at 410–786–7278. For all other issues call 410–786–1326.)

2. *Type of Information Collection Request:* Extension of a currently approved collection; *Title of Information Collection:* Health Insurance Benefit Agreement; *Use:* Applicants to the Medicare program are required to agree to provide services in accordance with Federal requirements. The CMS–1561 is essential for CMS to ensure that applicants are in compliance with the requirements. Applicants will be required to sign the completed form and provide operational information to CMS to assure that they continue to meet the requirements after approval. *Form Number:* CMS–1561 (OMB#: 0938–0832); *Frequency:* Yearly; *Affected Public:* Private Sector: Business or other for-profits and not-for-profit institutions; *Number of Respondents:* 3,000; Total *Annual Responses:* 3,000; *Total Annual Hours:* 500. (For policy questions regarding this collection contact JoAnn Perry at 410–786–3336. For all other issues call 410–786–1326.)

3. *Type of Information Collection Request:* Extension of a currently approved collection; *Title of Information Collection:* Children's Health Insurance Program; *Use:* States are required to submit title XXI plans and amendments for approval by the

Secretary pursuant to section 2102 of the Social Security Act in order to receive funds for initiating and expanding health insurance coverage for uninsured children. States are also required to submit State expenditure and statistical reports, annual reports and State evaluations to the Secretary as outlined in title XXI of the Social Security Act. *Form Number:* CMS–R–308 (OMB#: 0938–0841); *Frequency:* Yearly, quarterly, once and/or occasionally; *Affected Public:* State, Local, or Tribal Governments; *Number of Respondents:* 56; Total *Annual Responses:* 1,114,124; *Total Annual Hours:* 864,973. (For policy questions regarding this collection contact Nancy Goetschius at 410–786–0707. For all other issues call 410–786–1326.)

To obtain copies of the supporting statement and any related forms for the proposed paperwork collections referenced above, access CMS' Web Site at *http://www.cms.hhs.gov/PaperworkReductionActof1995,* or E-mail your request, including your address, phone number, OMB number, and CMS document identifier, to *Paperwork@cms.hhs.gov,* or call the Reports Clearance Office on (410) 786–1326.

In commenting on the proposed information collections please reference the document identifier or OMB control number. To be assured consideration, comments and recommendations must be submitted in one of the following ways by *September 21, 2010:*

1. *Electronically.* You may submit your comments electronically to *http://www.regulations.gov.* Follow the instructions for "Comment or Submission" or "More Search Options" to find the information collection document(s) accepting comments.

2. *By regular mail.* You may mail written comments to the following address:

CMS, Office of Strategic Operations and Regulatory Affairs, Division of Regulations Development, Attention: Document Identifier/OMB Control Number, Room C4–26–05, 7500 Security Boulevard, Baltimore, Maryland 21244–1850.

Dated: July 19, 2010.

Michelle Shortt,

Director, Regulations Development Group, Office of Strategic Operations and Regulatory Affairs.

[FR Doc. 2010–17899 Filed 7–22–10; 8:45 am]

BILLING CODE 4120–01–P

DEPARTMENT OF HEALTH AND HUMAN SERVICES

Administration on Aging

Agency Information Collection Activities; Submission for OMB Review; Comment Request; Service Provider Study

AGENCY: Administration on Aging, HHS.

ACTION: Notice.

SUMMARY: The Administration on Aging (AoA) is announcing that the proposed collection of information listed below has been submitted to the Office of Management and Budget (OMB) for review and clearance under the Paperwork Reduction Act of 1995. This collection of information relates to the Area Agency on Aging and Local Service Provider Study.

DATES: Submit written comments on the collection of information by August 23, 2010.

ADDRESSES: Submit written comments on the collection of information by fax 202.395.6974 to the OMB Desk Officer for AoA, Office of Information and Regulatory Affairs, OMB.

FOR FURTHER INFORMATION CONTACT: Jennifer Klocinski at 202–357–0146.

SUPPLEMENTARY INFORMATION: In compliance with 44 U.S.C. 3507, AoA has submitted the following proposed collection of information to OMB for review and clearance.

The Older Americans Act programs are administered and implemented through the Aging Service Network which is comprised of State Units on Aging (SUA), Area Agencies on Aging (AAA) and Local Service Providers (LSP). The Administration on Aging (AoA) collects annual program data at the state level and has sponsored studies to collect information regarding the Area Agencies on Aging. The third component of the Aging Network, the Local Service Providers, are poorly understood and characterized. AoA recognizes that basic information of their characteristics and understanding of their relationship with the other Aging Network components and in particular AAAs is an important knowledge gap that is in need of filling.

A qualitative study that involves a brief pre-interview questionnaire followed by interviews with AAA directors and their staff and focus groups with provider organizations was deemed to be the most appropriate method at this stage of research on LSPs. A total of 10 states will be selected for study and within each of those states three AAAs will be selected with the help of the SUA to represent a maximum range of AAA and service provider network characteristics. A focus group will be conducted with LSPs for each AAA.

The primary purpose of the study is to better understand the complexity of the Local Service Provider network and the interactions with the Area Agencies on Aging to inform planning, policy development and implementation of the OAA reauthorization provisions. The pre-site visit questions, interviews and focus groups will provide information on the range of LSP organizational characteristics, nature of the relationship including the division of roles and responsibilities between AAAs and LSPs, and types of management information systems and provider tracking systems at the AAA level.

A second purpose will be to provide information needed for the design of future representative studies. Probabilistic sampling requires accurate definitions of the study population and the ability to construct accurate sampling frames. The information collected will be used to develop operational definitions of LSPs that will be meaningful not only to AoA but to AAAs and LSPs. Information on provider tracking systems will help AoA devise methods for sampling frame construction that take into account the variety of systems used across AAAs. The proposed data collection tools may be found on the AoA Web site at *http://www.aoa.gov/AoARoot/Program_results/Program_Evaluation.aspx.*

AoA estimates the burden of this collection of information as follows: 350 hours.

Dated: July 19, 2010.

Kathy Greenlee,

Assistant Secretary for Aging.

[FR Doc. 2010–18001 Filed 7–22–10; 8:45 am]

BILLING CODE 4154–01–P

DEPARTMENT OF HEALTH AND HUMAN SERVICES

Centers for Medicare & Medicaid Services

[Document Identifier: CMS–10141, CMS–R–246, CMS–10146 and CMS–10095]

Agency Information Collection Activities: Submission for OMB Review; Comment Request

AGENCY: Centers for Medicare & Medicaid Services.

In compliance with the requirement of section 3506I(2)(A) of the Paperwork Reduction Act of 1995, the Centers for Medicare & Medicaid Services (CMS),

Department of Health and Human Services, is publishing the following summary of proposed collections for public comment. Interested persons are invited to send comments regarding this burden estimate or any other aspect of this collection of information, including any of the following subjects: (1) The necessity and utility of the proposed information collection for the proper performance of the Agency's function; (2) the accuracy of the estimated burden; (3) ways to enhance the quality, utility, and clarity of the information to be collected; and (4) the use of automated collection techniques or other forms of information technology to minimize the information collection burden.

1. *Type of Information Collection Request:* Revision of a currently approved collection; *Title of Information Collection:* Medicare Prescription Drug Benefit Plan; *Use:* Section 101 of Title I of the Medicare Prescription Drug, Improvement, and Modernization Act of 2003 added sections 1860D–1 through D–42 to establish this new program. Part D plans use the information discussed to comply with the eligibility and associated Part D participating requirements. CMS will use this information to approve contract applications, monitor compliance with contract requirements, make proper payment to plans, and to ensure that correct information is disclosed to enrollees, both potential enrollees and enrollees. *Form Number:* CMS–10141 (OMB#: 0938–0964); *Frequency:* Yearly; *Affected Public:* Individuals and households, and business or other for-profit and not-for-profit institutions; *Number of Respondents:* 19,937,660; *Total Annual Responses:* 43,153,271; *Total Annual Hours:* 36,520,101. (For policy questions regarding this collection contact Christine Hinds at 410–786–4578. For all other issues call 410–786–1326.)

2. *Type of Information Collection Request:* Revision of a currently approved collection; *Title of Information Collection:* Consumer Assessment of Health Care Providers and Systems (CAHPS); *Use:* CMS is required to collect and report information on the quality of health care services and prescription drug coverage available to persons enrolled in a Medicare health or prescription drug plan under provisions in the Medicare Prescription Drug, Improvement, and Modernization Act of 2003 (MMA). Specifically, the MMA under Sec. 1860D–4 (Information to Facilitate Enrollment) requires CMS to conduct consumer satisfaction surveys regarding Medicare prescription drug plans and Medicare Advantage plans and report this information to Medicare beneficiaries prior to the Medicare annual enrollment period. The Medicare CAHPS survey meets the requirement of collecting and publicly reporting consumer satisfaction information. Refer to the supporting documents to review the current collection changes. *Form Number:* CMS–R–246 (OMB#: 0938–0732); *Frequency:* Yearly; *Affected Public:* Individuals and households, and business or other for-profit and not-for-profit institutions; *Number of Respondents:* 567,324; *Total Annual Responses:* 567,324; *Total Annual Hours:* 242,376. (For policy questions regarding this collection contact Elizabeth Goldstein at 410–786–6665. For all other issues call 410–786–1326.)

3. *Type of Information Collection Request:* Revision of a currently approved collection; *Title of Information Collection:* Notice of Denial of Medicare Prescription Drug Coverage: *Use:* Section 1860D–4(g)(1) of the Social Security Act requires Part D plan sponsors that deny prescription drug coverage to provide a written notice of the denial to the enrollee. The purpose of this notice is to provide information to enrollees when prescription drug coverage has been denied, in whole or in part, by their Part D plans. The notice must be readable, understandable, and state the specific reasons for the denial. The notice must also remind enrollees about their rights and protections related to requests for prescription drug coverage and include an explanation of both the standard and expedited redetermination processes and the rest of the appeal process. For a list of changes, refer to the summary of changes document. *Form Number:* CMS–10146 (OMB#: 0938–0976); *Frequency:* Daily; *Affected Public:* Business or other for-profits; *Number of Respondents:* 456; *Total Annual Responses:* 290,344; *Total Annual Hours:* 145,172. (For policy questions regarding this collection contact Kathryn M. Smith at 410–786–7623. For all other issues call 410–786–1326.)

4. *Type of Information Collection Request:* Revision of a currently approved collection; *Title of Information Collection:* Detailed Explanation of Non-Coverage (42 CFR 422.626(e)(1)), and Notice of Medicare Non-Coverage (42 CFR 422.624(b)(1)); *Use:* Under section 42 CFR 422.624 (b)(1), skilled nursing facilities (SNFs), home health agencies (HHAs), and comprehensive outpatient rehabilitation facilities (CORFs) must deliver to Medicare health plan enrollees a 2-day advance notice of termination of services. Per requirements at 42 CFR 422.626(e)(1), plans must deliver detailed notices to the Quality Improvement Organization (QIO) and enrollees whenever an enrollee appeals a termination of services. The Notice of Medicare Non-Coverage (NOMNC) and the Detailed Explanation of Non-Coverage (DENC) fulfill these regulatory requirements. Additionally, 42 CFR 417.600(b) provides that cost plans must follow these same fast track appeal notification procedures for their enrollees in SNFs, HHAs and CORFs. Refer to the crosswalk document for a list of changes. *Form Number:* CMS–10095 (OMB#: 0938–0910); *Frequency:* Yearly; *Affected Public:* Business or other for-profits and not-for-profit institutions; *Number of Respondents:* 25,655; *Total Annual Responses:* 100,785; *Total Annual Hours:* 45,353.25 (For policy questions regarding this collection contact Stephanie Simons at 206–615–2420. For all other issues call 410–786–1326.)

To obtain copies of the supporting statement and any related forms for the proposed paperwork collections referenced above, access CMS Web Site address at *http://www.cms.hhs.gov/PaperworkReductionActof1995,* or E-mail your request, including your address, phone number, OMB number, and CMS document identifier, to *Paperwork@cms.hhs.gov,* or call the Reports Clearance Office on (410) 786–1326.

To be assured consideration, comments and recommendations for the proposed information collections must be received by the OMB desk officer at the address below, no later than 5 p.m. on *August 23, 2010.* OMB, Office of Information and Regulatory Affairs, Attention: CMS Desk Officer; Fax Number: (202) 395–6974; E-mail: *OIRA_submission@omb.eop.gov.*

Dated: July 19, 2010.

Michelle Shortt,

Director, Regulations Development Group, Office of Strategic Operations and Regulatory Affairs.

[FR Doc. 2010–17898 Filed 7–22–10; 8:45 am]

BILLING CODE 4120–01–P

DEPARTMENT OF HEALTH AND HUMAN SERVICES

Agency for Healthcare Research and Quality

Agency Information Collection Activities: Proposed Collection; Comment Request

AGENCY: Agency for Healthcare Research and Quality, HHS.

ACTION: Notice.

SUMMARY: This notice announces the intention of the Agency for Healthcare Research and Quality (AHRQ) to request that the Office of Management and Budget (OMB) approve the proposed information collection project: "Reduction of Clostridium difficile Infections in a Regional Collaborative of Inpatient Healthcare Settings through Implementation of Antimicrobial Stewardship." In accordance with the Paperwork Reduction Act, 44 U.S.C. 3501–3520, AHRQ invites the public to comment on this proposed information collection.

DATES: Comments on this notice must be received by September 21, 2010.

ADDRESSES: Written comments should be submitted to: Doris Lefkowitz, Reports clearance Officer, AHRQ, by e-mail at *doris.lefkowitz@AHRQ.hhs.gov.*

Copies of the proposed collection plans, data collection instruments, and specific details on the estimated burden can be obtained from the AHRQ Reports clearance Officer.

FOR FURTHER INFORMATION CONTACT: Doris Lefkowitz, AHRQ Reports clearance Officer, (301) 427–1477, or by e-mail at *doris.lefkowitz@AHRQ.hhs.gov.*

SUPPLEMENTARY INFORMATION:

Proposed Project

Reduction of Clostridium Difficile Infections in a Regional Collaborative of Inpatient Healthcare Settings Through Implementation of Antimicrobial Stewardship

Healthcare Acquired Infections (HAIs) caused almost 100,000 deaths among the 2.1 million people who acquired infections while hospitalized in 2000, and HAI rates have risen relentlessly since then. Alarmingly, 70% of HAIs are due to bacteria that are resistant to commonly used antibiotics (Huang 2007). This project is designed to evaluate the implementation of a program to reduce Clostridium difficile Infection (CDI) in acute care facilities via Antimicrobial Stewardship Programs (ASPs). Working with an already existing collaborative network of acute care facilities in New York that currently collect and report mandatory data on CDI rates and practice strict environmental controls, this project will go beyond environmental strategies in order to attempt to reduce rates of CDI. ASPs seek to promote the appropriate use of antimicrobials via several methods including selecting the appropriate dose, duration and route of administration of antibiotics. Using antibiotics appropriately can potentially improve efficacy, reduce costs, and keep drug-related adverse events to a minimum. The project is a partnership with Boston University School of Public Health (BUSPH), Montefiore Medical Center (MMC), and Greater New York Hospital Association (GNYHA).

The overall aims of the research are to evaluate the implementation of ASPs specific to CDI at 11 participating hospitals (6 intervention sites and 5 control sites) and to create a draft ASP Toolkit. More specifically, the pilot study has been designed to provide information to meet the following objectives:

1. Identify the antimicrobial stewardship activities, both currently in place and those yet to be identified, specific to each site's individual needs, to optimize antimicrobial prescribing practices to reduce CDI
2. Assess prescriber perceptions related to ASP
3. Assess barriers and facilitators to ASP implementation
4. Develop a draft ASP Toolkit to help hospitals optimize their antimicrobial prescribing practices to reduce CDI.

New York (NY) State currently requires ongoing reporting of C-difficile data for both clinical and surveillance purposes. As part of an arrangement with NY State, the Greater New York Hospital Association (GNYHA) also collects and analyzes these data through their CDI collaborative. These data include tracking baseline rates of CDI, including pharmacy data, data related to rates of CDI, patient outcomes, and data about infection control practices (such as hand-washing and other environmental controls to prevent spread of infection). The data are collected on standardized forms that are required by both the state and the Centers for Disease Control and Prevention (CDC). The data collected at these participating hospitals are also collected at multiple hospitals nationwide as part of routine patient care and quality. In addition to new data collections initiated specifically for this project, this routine and ongoing mandatory data collection will serve as the project's knowledge base to allow the assessment of ASP programs.

From the GNYHA data, a three-month sample from the participating hospitals will be analyzed by Montefiore Medical Center (MMC) and GNYHA to obtain baseline information. This data will enable a comparison of the rates of CDI before and after the implementation of an ASP. The ASP will be implemented at 6 hospitals (intervention sites), while 5 other hospitals will serve as control sites and continue with their current practices, including conducting general infection and environmental controls. The specific elements of the ASPs will vary by hospital based on priorities and what is possible at each facility as well as by the antibiotic(s) targeted and will likely include some of the following:

- Formulary review/changes, restrictions and preauthorization of implicated antimicrobials
- Feedback to providers of implicated antimicrobials
- Processes and algorithms for empiric and streamlined regimens for specific diagnoses/pathogens
- Antibiotic order form with automatic stop orders
- Novel combinations of approaches to the use of stewardship staff or technology for stewardship (*e.g.,* software, text paging, pyxis pharmacy machines for tracking and promoting proper antibiotic prescribing), and
- Educational efforts for clinicians and patients upon diagnosis.

While the ongoing mandatory reporting will allow the measurement of change over time in CDI rates, it does not provide the necessary information that hospitals need about the challenges of implementing an ASP.

Method of Collection

The following data collection activities will be implemented to achieve the objectives of this project:

1. Focus Groups with no more than 6 staff members at the intervention and control hospitals. The focus groups will be conducted one time only, by telephone and approximately 12 months after the implementation begins. The focus group guides will differ for the intervention and control sites, although there will be a common core of questions. The common core of the focus group protocol will address the following: issues related to experience with the GNYI-[A] environmental and infection control practices they have already been utilizing, strategies they have already used to reduce CDI and perceptions of those strategies, barriers to the environmental practices, particular areas of challenge, facilitators, and factors they think have contributed most to their institution's CDI rates. For the intervention sites, the goal of the focus group will be to understand in a more in-depth and qualitative manner, the experience of actually implementing the ASP. For the control sites, the goal will be to understand what they have learned in being a control site and their plans moving forward. In addition to the core questions, questions will be asked about their interest in starting an ASP program, goals and priorities, expectations of facilitators and barriers

and if and when they plan to implement an ASP.

2. ASP Questionnaire will be administered twice, pre and post implementation, to a sample of about 70 hospital staff at both the intervention and control hospitals. Intervention and control facilities will receive the same questionnaire. The purpose of this survey is to measure the staff's perception of the scope of CDI at their facility, current antibiotic prescribing practices, the perceived need for ASPs and how these change over time. The questionnaire also collects some background information such as the staff members' primary work area, time worked in their profession and time worked in this hospital.

While the reporting/surveillance data required by the State of NY and the CDC can measure rates of CDI and compare how hospitals are doing, these data do not capture many important issues. A major reason that most hospitals do not have active, robust ASPs is because they can be incredibly challenging to develop, administer and manage. They require changes in prescribing practices and the active agreement and participation of physicians, pharmacists and administrators. Physicians and pharmacists may challenge restrictions in formularies and determine that a patient may not be given a specific antibiotic. But the severity of CDI makes it very important for hospitals to determine optimal methods for implementing successful ASPs. This pilot study will collect data to allow the comparison of perceptions and experiences between hospitals that do and do not attempt to implement an ASP. Reflections and feedback directly from prescribers and the ASP team using qualitative data collection procedures are needed to fully understand what it means or would mean to implement an ASP. The lessons learned from this project will be useful to health care facilities considering implementing an ASP, and will inform the development of a draft ASP Toolkit; this Toolkit will be evaluated in a separate project before being disseminated.

This study is being conducted by AHRQ through its contractor, BUSPH and their partners Montefiore Medical Center (MMC), and Greater New York Hospital Association (GNYHA), pursuant to AHRQ's statutory authority to conduct and support research on healthcare and on systems for the delivery of such care, including activities with respect to the quality, effectiveness, efficiency, appropriateness and value of healthcare services and with respect to quality measurement and improvement. 42 U.S.C. 299a(a)(1) and (2).

Estimated Annual Respondent Burden

Exhibit 1 shows the estimated annualized burden hours for the respondents' time to participate in this pilot study. Focus Groups will be conducted post-intervention with approximately 6 staff members at each of the 11 study sites (5 control sites and 6 intervention sites) for a total of 66 individuals, approximately 36 at the intervention sites and approximately 30 at the control sites. The control site focus groups will last approximately 45 minutes. The intervention site focus groups will last approximately 60 minutes.

The ASP questionnaire will be administered twice, pre and post-intervention, to about 70 staff members at each of the 11 participating sites and takes about 7 minutes to complete. The total annualized burden is estimated to be 239 hours.

Exhibit 2 shows the estimated annualized cost burden associated with the respondents' time to participate in this study. The total cost burden is estimated to be $15,037.

EXHIBIT 1—ESTIMATED ANNUALIZED BURDEN HOURS

Form Name	Number of hospitals	Number of responses per hospital	Hours per response	Total burden hours
Focus groups at intervention sites	6	6	1	36
Focus groups at control sites	5	6	45/60	23
ASP Questionnaire	11	140	7/60	180
Total	22	n/a	n/a	239

EXHIBIT 2—ESTIMATED ANNUALIZED COST BURDEN

Form Name	Number of hospitals	Total burden hours	Average hourly wage rate*	Total cost burden
Focus groups at intervention sites	6	36	$57.38	$2,066
Focus groups at control sites	5	23	57.38	1,320
ASP Questionnaire	11	180	64.73	11,651
Total	22	237	n/a	15,037

* The hourly wage for the focus groups is based upon the mean of the average wages for physicians ($79.33), pharmacists ($50.13), and medical and health services managers ($42.67). The hourly wage for the surveys is based upon the average wages for physicians ($79.33) and pharmacists ($50.13). These data come from the May 2008 National Occupational Employment and Wage Estimates, United States, U.S. Bureau of Labor Statistics Division of Occupational Employment Statistics, May 2008, National Occupational Employment and Wage Estimates, *http://www.bls.gov/oes/2008/may/oes_nat.htm#b11–0000.*

Estimated Annual Costs to the Federal Government

Exhibit 3 shows the annualized and total cost to the federal government for this two year research project. Project Management includes activities related to coordination between BUSPH staff, contracted staff at MMC and GNYHA, and monthly phone calls with the task order officer. Project development covers steps taken to revise the research plan and begin implementation. The total cost is estimated to be $999,995.

EXHIBIT 3—ESTIMATED TOTAL AND ANNUALIZED COST TO THE GOVERNMENT

Cost component	Annualized cost	Total cost
Project Management	$28,315	$56,629
Project Development	84,944	169,400
Data Collection and Analysis	169,888	339,776
Technical Assistance and Consultation	60,750	121,500
Confirmatory lab testing	20,000	40,000
Travel	7,500	15,000
Project Supplies and materials	2,450	4,900
Overhead	126,395	252,790
Total	499,998	999,995

Request for Comments

In accordance with the above-cited Paperwork Reduction Act legislation, comments on AHRQ's information collection are requested with regard to any of the following: (a) Whether the proposed collection of information is necessary for the proper performance of AHRQ healthcare research and healthcare information dissemination functions, including whether the information will have practical utility; (b) the accuracy of AHRQ's estimate of burden (including hours and costs) of the proposed collection(s) of information; (c) ways to enhance the quality, utility, and clarity of the information to be collected; and (d) ways to minimize the burden of the collection of information upon the respondents, including the use of automated collection techniques or other forms of information technology.

Comments submitted in response to this notice will be summarized and included in the Agency's subsequent request for OMB approval of the proposed information collection. All comments will become a matter of public record.

Dated: July 9, 2010.

Carolyn M. Clancy,

Director.

[FR Doc. 2010–17796 Filed 7–22–10; 8:45 am]

BILLING CODE 4160–90–M

DEPARTMENT OF HEALTH AND HUMAN SERVICES

Agency for Toxic Substances and Disease

Board of Scientific Counselors, National Center for Environmental Health/Agency for Toxic Substances and Disease Registry (BSC, NCEH/ATSDR): Notice of Charter Renewal

This gives notice under the Federal Advisory Committee Act (Pub. L. 92–463) of October 6, 1972, that the Board of Scientific Counselors, Agency for Toxic Substances and Disease Registry, of the Department of Health and Human Services, has been renewed for a 2-year period extending through May 21, 2012.

For further information, contact Paula Burgess, M.D., Ph.D., Designated Federal Officer, BSC, NCEH/ATSDR, 1600 Clifton Road, NE, Mailstop E–28, Atlanta, Georgia 30333, telephone 404/488–0574, e-mail.

The Director, Management Analysis and Services Office, has been delegated the authority to sign **Federal Register** notices pertaining to announcements of meetings and other committee management activities, for both CDC and the Agency for Toxic Substances and Disease Registry.

Dated: July 15, 2010.

Elaine L. Baker,

Director, Management Analysis and Services Office, Centers for Disease Control and Prevention.

[FR Doc. 2010–18063 Filed 7–22–10; 8:45 am]

BILLING CODE 4163–18–P

DEPARTMENT OF HEALTH AND HUMAN SERVICES

Food and Drug Administration

[Docket No. FDA–2010–D–0347]

International Conference on Harmonisation; Draft Guidance on Q4B Evaluation and Recommendation of Pharmacopoeial Texts for Use in the International Conference on Harmonisation Regions; Annex 13 on Bulk Density and Tapped Density of Powders General Chapter; Availability; Correction

AGENCY: Food and Drug Administration, HHS.

ACTION: Notice; correction.

SUMMARY: The Food and Drug Administration (FDA) is correcting a notice that appeared in the **Federal Register** of July 14, 2010 (75 FR 40843). The document announced the availability of a draft guidance entitled "Q4B Evaluation and Recommendation of Pharmacopoeial Texts for Use in the ICH Regions; Annex 13: Bulk Density and Tapped Density of Powders General Chapter." The document was published with an incorrect docket number. This document corrects that error.

FOR FURTHER INFORMATION CONTACT: Joyce Strong, Office of Policy, Planning and Budget, Food and Drug Administration, 10903 New Hampshire Ave., Bldg. 32, rm. 3208, Silver Spring, MD 20993–0002, 301–796–9148.

SUPPLEMENTARY INFORMATION: In FR Doc. 2010–17055, appearing on page 40843 in the **Federal Register** of Wednesday, July 14, 2010, the following correction is made:

On page 40843, in the first column, in the headings section of the document, "[Docket No. FDA–2010–N–0344]" is corrected to read "[Docket No. FDA–2010–D–0347]".

Dated: July 20, 2010.

David Dorsey,

Acting Deputy Commissioner for Policy, Planning and Budget.

[FR Doc. 2010–18119 Filed 7–22–10; 8:45 am]

BILLING CODE 4160–01–S

DEPARTMENT OF HEALTH AND HUMAN SERVICES

Health Resources and Services Administration

Administration for Children and Families

Maternal, Infant, and Early Childhood Home Visiting Program

AGENCY: Health Resources and Services Administration and Administration for Children and Families, HHS.

ACTION: Request for public comment on criteria for evidence of effectiveness of home visiting program models for pregnant women, expectant fathers, and caregivers of children birth through kindergarten entry.

SUMMARY: The Health Resources and Services Administration and

Administration for Children and Families, HHS, solicit comments by August 17, 2010 on proposed criteria for evidence of effectiveness of home visiting program models for pregnant women, expectant fathers, and primary caregivers of children birth through kindergarten entry. Final criteria for evidence of effectiveness will be included in the program announcement inviting eligible entities to apply for funding under the Affordable Care Act Maternal, Infant, and Early Childhood Home Visiting Program.

SUPPLEMENTARY INFORMATION: *Invitation to Comment:* HHS invites comments regarding this notice, both on the proposed criteria and proposed methodology for HHS's systematic review of the evidence. To ensure that your comments have maximum effect, please identify clearly the specific criterion or other section of this notice that your comment addresses.

1.0 Purpose of Program

The Affordable Care Act (ACA) Maternal, Infant, and Early Childhood Home Visiting program is designed to strengthen and improve home visiting programs, improve service coordination for at risk communities, and identify and provide comprehensive evidence-based home visiting services to families who reside in at risk communities. The legislation specifies that most program funds must be used for "evidence-based" home visiting program models. This Notice (1) proposes criteria to be considered in assessing whether home visiting models have evidence of effectiveness, and (2) describes the methodology for a systematic review of evidence, applying the criteria proposed in this Notice, which HHS is currently conducting. The Notice solicits comments on both items.

2.0 Background

2.1 Legislative Context

On March 23, 2010, the President signed into law the Patient Protection and Affordable Care Act of 2010 (Pub. L. 111–148) (also known as the Affordable Care Act or ACA); historic legislation designed to make quality, affordable health care available to all Americans, reduce costs, improve health care quality, enhance disease prevention, and strengthen the health care workforce. Through a provision adding Section 511 to Title V of the Social Security Act to create the Maternal, Infant, and Early Childhood Home Visiting program, the Act responds to the diverse needs of children and families in at risk communities and provides an historic and unique opportunity for collaboration at the Federal, State, and local level to assure coordination and delivery of critical health, development, early learning, and child abuse and neglect prevention services to most effectively serve these children and families. By supporting evidence-based home visiting program models, the ACA Maternal, Infant, and Early Childhood Home Visiting program plays a crucial role in national efforts to build quality, comprehensive statewide early childhood systems for pregnant women, parents, and caregivers, and children from birth to 8 years of age.

The ACA Maternal, Infant, and Early Childhood Home Visiting Program is designed: (1) To strengthen and improve the programs and activities carried out under Title V; (2) to improve coordination of services for at risk communities; and (3) to identify and provide comprehensive services to improve outcomes for families who reside in at risk communities. At risk communities will be identified through a statewide assessment of needs and of existing resources to meet those needs. HHS intends that the home visiting program will result in a coordinated system of early childhood home visiting in every State that has the capacity to provide infrastructure and supports to assure high-quality, evidence-based practice.

The program enables eligible entities to utilize what is known about effective home visiting services to provide evidence-based programs to promote: improvements in prenatal, maternal and newborn health; child health and development including prevention of child injuries and maltreatment and improvements in cognitive, language, social-emotional, and physical development; parenting skills; school readiness; reductions in crime or domestic violence; improvements in family economic self-sufficiency; and improvements in the coordination and referrals for other community resources and supports.

2.2 Use of Funds for "Evidence-Based" Programs

Section 511(d)(3)(A) of Title V, as amended by the Affordable Care Act, reserves the majority of grant funds for home visiting program models with evidence of effectiveness based on rigorous evaluation research. The legislation specifies that models must meet the following requirements in order to be considered "evidence-based":

(I) The model conforms to a clear consistent home visitation model that has been existence for at least 3 years and is research-based, grounded in relevant empirically-based knowledge, linked to program determined outcomes, associated with a national organization or institution of higher education that has comprehensive home visitation program standards that ensure high quality services delivery and continuous program improvement, and has demonstrated significant, (and in the case of the service delivery model described in item (aa), sustained) positive outcomes, as described in the benchmark areas specified in paragraph (1)(A) and the participant outcomes described in paragraph (2)(B), when evaluated using a well-designed and rigorous—

(aa) randomized controlled research designs, and the evaluation results have been published in a peer-reviewed journal; or

(bb) quasi-experimental research designs.

The legislation charges the Secretary of Health and Human Services with establishing criteria for evidence of effectiveness of the home visiting program models and ensuring the process for establishing the criteria is transparent and provides the opportunity for public comment.

This Notice (1) proposes criteria to be considered in assessing whether home visiting models have evidence of effectiveness and (2) describes the methodology for a systematic review of evidence, applying the criteria proposed in this Notice, which HHS is currently conducting. The Notice solicits comments on both items. After comments are received, HHS will finalize the criteria and methodology and complete the systematic review of the available evidence of effectiveness of selected home visiting program models.

It is expected that eligible entities will also have an opportunity to present documentation in their applications for the ACA Maternal, Infant, and Early Childhood Home Visiting program to demonstrate that additional home visiting models meet the final criteria. Such documentation will be reviewed by HHS using the same procedures applied in HHS' systematic review and described below.

The criteria proposed in this notice apply only to the home visiting program for States and territories authorized by Section 511(c) of Title V. Criteria for the ACA Tribal Maternal, Infant, and Early Childhood Home Visiting Program authorized by Section 511(h)(2)(A) of Title V will be issued separately. Based on a careful review of available research evidence on home visiting interventions with Tribal populations, the Secretary will develop alternative evidence-based criteria for identifying home visiting models likely to improve outcomes for families in Tribal communities.

3.0 Proposed Criteria for Evidence of Effectiveness

A home visiting model must have been (1) evaluated using rigorous methodology and (2) shown to have a positive impact on outcomes in order to meet criteria for evidence of effectiveness. The following two types of criteria (3.1 and 3.2) must be met in order for a home visiting model to be considered evidence-based for the purposes of the Maternal, Infant, and Early Childhood Home Visiting Program:

3.1 Criteria for Well-Designed, Rigorous Impact Research

In order to ensure the highest probability of producing unbiased estimates of program impacts, there are a number of variables that should be considered. These variables include study design (i.e. randomized controlled trial [RCT] or quasi-experimental design [QED]), level of attrition, baseline equivalence, reassignment of participants from one condition to another in the trial, the reliability and validity of outcome measures studied, and confounding factors.

Two types of impact study designs have the potential to be both well-designed and rigorous: Randomized controlled trials and quasi-experimental designs. HHS proposes to define randomized controlled trials as a study design in which sample members are assigned to the program and comparison groups by chance. Randomized control designs are often considered the "gold standard" of research design because personal characteristics (before the program begins) do not affect whether someone is assigned to the program or control group. HHS proposes to define a quasi-experimental design as a study design in which sample members are selected for the program and comparison groups in a nonrandom way. For example, families may self-select into groups (deciding whether they want services or not) or an administrator may assign families to groups based on family risk factors. Quasi-experimental designs are considered weaker than randomized controlled trials because characteristics that may be related to outcomes, such as motivation or need, may also influence whether someone is in the program or comparison group.

HHS proposes that an impact study will be considered high, moderate or low quality depending on the study's capacity to provide unbiased estimates of program impact. Studies that are rated "high" and "moderate" (see Table 1 below), therefore, would meet requirements to be considered "well-designed, rigorous impact research." In brief, the high rating would be reserved for random assignment studies with low attrition of sample members and no reassignment of sample members after the original random assignment. The moderate rating would apply to studies that use a quasi-experimental design and to random assignment studies that, due to flaws in the study design or execution (for example, high sample attrition), do not meet all the criteria for the high rating. To receive the moderate rating, studies would have to demonstrate that at the study's onset, the intervention and comparison groups were well matched on specified measures (i.e. baseline equivalence), such as a pretest measure of targeted outcomes or race and maternal education. Studies that do not meet all of the criteria for either high or moderate quality would be considered low quality.

As summarized in Table 1, the rating scheme would consider five dimensions: (1) Study design, (2) attrition, (3) baseline equivalence, (4) reassignment, and (5) confounding factors.

TABLE 1—CRITERIA FOR WELL-DESIGNED, RIGOROUS IMPACT RESEARCH

Rating Criteria	Rating		
	High	Moderate	Low
Study design	Random assignment	Quasi-experimental design with a comparison group; random assignment design with high attrition or any reassignment.	Studies that do not meet the requirements for a high or moderate rating.
Attrition	Meets "What Works Clearinghouse" (Dept. of Education) standards for acceptable rates of overall and differential attrition.	No requirement.	
Baseline equivalence	No requirement other than random assignment; Statistically significant differences must be controlled.	Must establish baseline equivalence of study arms on selected measures (see Table 1, Note 2 below).	
Reassignment (see Table 1, Note 1 below).	Analysis must be based on original assignment to study arms.	No requirement.	
Confounding factors	Must have at least two participants in each study arm and no systematic differences in data collection methods.	Must have at least two participants in each study arm and no systematic differences in data collection methods.	

Table 1, Note 1: In random assignment studies, deviation from the original random assignment (for example, moving families from the treatment to the control group) can also bias the impact estimates. Therefore, in order for a RCT to meet our criteria for the high rating, the analysis must be performed on the sample as originally assigned. Subjects may not be reassigned for reasons such as contamination, noncompliance, or level of exposure. RCTs that somehow alter the original random assignment but otherwise meet the criteria for the high rating are considered for a moderate study rating, provided they meet the other criteria for that rating. Our criteria are similar to those developed by the WWC, which allows a study to be downgraded as a result of reassignment.

Table 1, Note 2: When possible, baseline equivalence should be established on outcomes of interest. For some studies it is not feasible to collect baseline measures on the outcome of interest, for example, children's

outcomes when baseline is collected prenatally. For all studies, baseline equivalence must be established on two demographic factors: (1) The parent or child's race and ethnicity and (2) socioeconomic status.

3.2 HHS Proposed Criteria for Evidence of Effectiveness of a Home Visiting Service Delivery Model

In order to have confidence in the impact estimates created from a high or moderate quality study design, a number of variables should be considered. These variables include statistical significance, whether impacts are sustained, and whether the impacts were found for the full sample or only for non-replicated subgroups.

3.2.1 The ACA Maternal, Infant and Early Childhood Home Visitation Program legislation includes a number of participant outcome and benchmark areas. In determining program effectiveness HHS proposes to examine programs for impacts in the following eight program domains:

(1) Maternal health

(2) Child health

(3) Child development and school readiness, including improvements in cognitive, language, social-emotional or physical development

(4) Prevention of child injuries and maltreatment

(5) Parenting skills

(6) Reductions in crime or domestic violence

(7) Improvements in family economic self-sufficiency

(8) Improvements in the coordination and referrals for other community resources and supports.

3.2.2 Taking into account the legislative language and the two types of criteria discussed in 3.1 and 3.2 above, HHS proposes to consider a program model eligible for evidence-based funding for the purposes of the ACA Maternal, Infant, and Early Childhood Home Visiting Program if it meets the following minimum criteria:

- At least one high- or moderate-quality impact study (see 3.1) of the program model finds favorable, statistically significant impacts in two or more of the eight outcome domains (see 3.2.1); or
- At least two high- or moderate-quality impact studies using different samples (see 3.1) of the program model find one or more favorable, statistically significant impacts in the same domain (see 3.2.1).

In both cases, the impacts considered must be found either for the full sample or, if found for subgroups but not for the full sample, impacts must be replicated in the same domain in two or more studies using different samples.

Additionally, if the program model meets the above criteria based on findings from randomized control trial(s) only, then one or more impacts in an outcome domain must be sustained for at least one year after program enrollment, and one or more impacts in an outcome domain must be reported in a peer-reviewed journal (consistent with section 511(d)(3)(A)(i)(I)).

Isolated positive findings, and impacts found only for a subgroup, but not the full sample in a study, raise concerns about false positives that may be artifacts of multiple statistical tests rather than reflecting true impacts. The requirements for replication of positive findings across samples or for findings in two or more outcome domains are meant to guard against this problem. HHS recognizes the importance of subgroup findings for determining impacts on subgroups of the population of interest, including specific racial or ethnic groups, and plans to report information on subgroup findings, whether replicated or not.

4.0 Proposed Methods for HHS's Systematic Review of Evidence of Effectiveness

HHS is conducting a comprehensive and detailed program model-by-model review of the available evidence of effectiveness of home visiting programs that support the following legislatively specified benchmarks and outcomes: Maternal health; child health; child development and school readiness including improvements in cognitive, language, social-emotional, and physical development; prevention of child injuries and maltreatment; parenting skills; reductions in crime or domestic violence; improvements in family economic self-sufficiency; and improvements in the coordination and referrals for other community resources and supports.

The review is being carried out through a contract to Mathematica Policy Research, Inc. and led by the Administration for Children and Families in collaboration with the Health Resources and Services Administration, the Office of the Assistant Secretary for Planning and Evaluation, and the Centers for Disease Control and Prevention. The review will apply the HHS criteria proposed above to determine which of the program models reviewed meet the criteria for evidence of effectiveness. The review will be completed after comments on this notice are received and considered.

4.1 Review Process

To conduct a through and transparent review of the home visiting program model research literature, the systematic review project is following five main steps, the first three of which have been provisionally completed. Comments on steps 4 and 5 are especially encouraged.

1. Conduct a broad literature search;
2. Screen studies for relevance;
3. Prioritize program models for review;
4. Rate the quality of impact studies with eligible designs;
5. Assess the evidence of effectiveness for each program model.

In addition, the project plans to review and make available implementation information for each program. Steps taken to address potential conflicts of interest are also described below.

4.1.1 Step 1: Conduct a Broad Literature Search

The literature search included four main activities:

1. *Database Searches.* The project team searched on relevant key words in a range of research databases. Key words included terms related to the service delivery approach, target population, and outcome domains emphasized in the Patient Protection and Affordable Care Act. The initial search was limited to studies published since 1989; a more focused search on prioritized program models included studies published since 1979 (see Prioritizing Programs below).

2. *Web Site Searches.* The project team used a custom Google search engine to search more than 50 relevant government, university, research, and nonprofit Web sites for unpublished reports and papers.

3. *Call for Studies.* In November 2009, Mathematica issued a call for studies and sent it to approximately 40 relevant listservs for dissemination.

4. *Review of Existing Literature Reviews and Meta-Analyses.* The project team checked search results against the bibliographies of recent literature reviews and meta-analyses of home visiting programs and added relevant missing citations to the search results.

The literature search yielded approximately 8,200 unduplicated citations, including 150 articles submitted through the call for studies.

4.1.2 Step 2: Screen Studies for Relevance

The project team then screened all citations identified through the literature search for relevance. Studies were screened out for the following reasons:

• The model under study did not use home visitation as a primary service delivery strategy. Programs that are primarily center-based with infrequent or supplemental home visiting were excluded. In order to be considered a home visiting model, a program must offer home visiting services to most or all participants and these services must be integral to programmatic goals. Visits should occur solely or primarily where participating families reside but occasionally may occur elsewhere if the families are homeless or uncomfortable conducting visits in the home. The services could be voluntary or mandated (for example, court ordered).

• The study did not use an eligible design as described in 3.1 above (randomized controlled trial, quasi-experimental design). The project team also included any studies on the implementation of specific home visiting models. These studies were used in the implementation reports described in section 5.0 of this Notice.

• The program did not include pregnant women and families with children from birth to kindergarten entry.

• The study did not examine any outcomes in the domains of: Maternal health and/or child health; child development and school readiness; reductions in child maltreatment; reductions in juvenile delinquency, family violence, and crime; positive parenting practices; and family economic factors. The legislatively specified domain of improvement in coordination and referrals for community resources and supports was not used in screening because of challenges in specifying discrete measures.

• The study did not examine a clear home visiting program model. For example, the study might focus on a specific home visiting strategy, such as comparing the use of professional and paraprofessional home visiting staff within home visiting program model broadly rather than a specific program model. Without a clearly identified program model, the evidence review could not use the impact study to assess the effectiveness of a specific program.

• The study was not published in English. This limitation reflects practical considerations, given the limited time available for the review.

• The study was published before 1989 for the initial search or 1979 for the focused search on prioritized program models. These limitations balance practical considerations, given limited time available, and were designed to ensure that seminal research was included.

4.1.3 Step 3: Prioritize Program Models for Review

After screening, the initial search yielded studies on more than 250 home visiting program models. Timing and resources do not allow for a detailed review of all of these home visiting program models prior to the implementation of the ACA Maternal, Infant, and Early Childhood Home Visiting Program. For each model the team examined the number and design of impact studies, sample sizes of the impact studies, the availability of implementation information, whether the program was currently in widespread use in the U.S., and whether the program had been implemented only in a developing-world context. The project staff eliminated programs that had no information available about implementation, were implemented only in a developing-world context, or were no longer in operation and provided no support for implementation. This decision was made so that resources could be focused on reviewing program models that States and territories would be readily able to implement and that would be likely to meet other statutory requirements.

4.1.4 Step 4: Rating the Quality of Impact Studies

For the purposes of the systematic review, HHS plans to assign each impact study a rating of high, moderate, or low, per the criteria described in 3.1 above.

4.1.5 Step 5: Assessing Evidence of Effectiveness

After rating the quality of all available impact studies for a program, HHS plans to assess the evidence across all studies of the program models that received a high or moderate rating and measured outcomes in at least one of the legislatively specified participant outcome domains utilizing the HHS proposed criteria for evidence for effectiveness discussed in 3.2 above.

5.0 Implementation Reviews

To assist in implementation of the ACA Maternal, Infant and Early Childhood Home Visiting Program, the project plans to collect and publish information about implementation of the prioritized program models. The project plans to provide two kinds of implementation reports for each program model. One implementation report will focus on the support available to assist interested entities to implement the model (such as program model technical assistance staff or trainings) or infrastructure required to implement the model (such as the purchase of a specific data management system or curricula). The second kind of implementation report will focus on implementation experiences during the impact trials or in implementing the model in the field. These reports will provide information on the study samples in the impact trials, describe the locations where the specific model has been implemented, the average number of visits the participants receive, any available research on adaptations of the program models and lessons learned about implementing the models that have been reported in the available research.

6.0 Addressing Conflicts of Interest

All members of the review team have signed a conflict of interest statement in which they declared any financial or personal connections to developers, studies, or products being reviewed and confirmed their understanding of the process by which they must inform the project director if such conflicts arise. The review team's project director assembled signed conflict of interest forms for all project staff and subcontractors and monitors for possible conflicts over time. If a team member is found to have a potential conflict of interest concerning a particular home visiting program model being reviewed, that team member is excluded from the review process for the studies of that program model. In addition, reviews for two programs evaluated by Mathematica Policy Research are being conducted by contracted reviewers who are not Mathematica® employees.

7.0 Future Allocations Based on Application Strength

To encourage exemplary programs and direct Federal funds where they can have the greatest impact, HHS plans to allocate the ACA Maternal, Infant and Early Childhood Home Visiting Program funding available in future years that exceeds funding available in FY 2010 competitively based upon States' capacity and commitment to improve child outcomes specified in the statute through improvements in service coordination and the implementation of home visiting programs with fidelity to high-quality, evidence-based models. HHS plans to evaluate applications based on multiple criteria and invites comments on what criteria are appropriate. Among the criteria, HHS proposes to give significant weight to the strength of the available evidence of effectiveness of the model or models employed by the State. In this context, the use of program models satisfying the

criteria outlined in section 3.2.2 would be a minimal requirement, but HHS would consider additional criteria that further distinguish models with greater and lesser support in evidence. HHS is committed to ensuring that these criteria are transparent, methodologically sound, and increase the likelihood that federal funds will contribute to improved outcomes for at-risk children and families.

There are a number of different ways that such a system could be structured. We invite comments on the proposal to distinguish among evidence-based models based on a rubric that weighs factors relating to research quality and findings. For example, one relatively simple approach would rate models using an index constructed by weighting several factors equally. Models might be given points for meeting each of the following criteria: Favorable impacts sustained at least one year after program completion, favorable impacts replicated in distinct samples, favorable impacts in studies conducted by independent evaluators, quality and relevance of outcome measures; and balance between favorable and unfavorable and null findings. Additional factors which might be considered could include further indicia of the quality of the research design and implementation (as reflected in randomization, sample size, attrition, and baseline equivalence). We invite comments on HHS' proposal to use evidence for program models as a factor in determining allocations of additional funds, how various factors should be weighed in assessing the evidence of effectiveness, how to define these categories, and any other role distinctions related to the strength of the evidence should play in funding allocation. As noted above, strength of evidence is proposed to be only one factor in the evaluation of the strength of States' applications, and we invite comments on other appropriate factors as well.

8.0 Future Considerations

We invite comment on the following:

- HHS anticipates the criteria for evidence-based models will likely need to be altered over time as the state of the field changes. If HHS believes the criteria need to be changed in future years, it is anticipated the public will have an opportunity to comment on the proposed revisions.

- HHS intends to review the evidence base for home visiting models on an ongoing basis to ensure that new evidence is incorporated.

9.0 Submission of Comments

Comments may be submitted until August 17, 2010 by e-mail to: *HVEE@mathematica-mpr.com*.

Dated: July 19, 2010.

Mary K. Wakefield,

Administrator, Health Resources and Services Administration.

Carmen R. Nazario,

Assistant Secretary, Administration for Children and Families.

[FR Doc. 2010–18013 Filed 7–22–10; 8:45 am]

BILLING CODE 4165–15–P

DEPARTMENT OF HEALTH AND HUMAN SERVICES

Centers for Medicare & Medicaid Services

[CMS–1354–NC]

Medicare and Medicaid Programs; Announcement of an Application From a Hospital Requesting Waiver for Organ Procurement Service Area

AGENCY: Centers for Medicare & Medicaid Services (CMS), HHS.

ACTION: Notice with comment period.

SUMMARY: A hospital has requested a waiver of statutory requirements that would otherwise require the hospital to enter into an agreement with its designated Organ Procurement Organization (OPO). The request was made in accordance with section 1138(a)(2) of the Social Security Act (the Act). This notice requests comments from OPOs and the general public for our consideration in determining whether we should grant the requested waiver.

DATES: *Comment Date:* To be assured consideration, comments must be received at one of the addresses provided below, no later than 5 p.m. on September 21, 2010.

ADDRESSES: In commenting, please refer to file code CMS–1354–NC. Because of staff and resource limitations, we cannot accept comments by facsimile (FAX) transmission.

You may submit comments in one of four ways (please choose only one of the ways listed):

1. *Electronically.* You may submit electronic comments on this regulation to *http://www.regulations.gov.* Follow the instructions under the "More Search Options" tab.

2. *By regular mail.* You may mail written comments to the following address ONLY:

Centers for Medicare & Medicaid Services, Department of Health and Human Services, Attention: CMS–1354–NC, P.O. Box 8010, Baltimore, MD 21244–1850.

Please allow sufficient time for mailed comments to be received before the close of the comment period.

3. *By express or overnight mail.* You may send written comments to the following address ONLY:

Department of Health and Human Services, Attention: CMS–1354–NC, Mail Stop C4–26–05, 7500 Security Boulevard, Baltimore, MD 21244–1850.

4. *By hand or courier.* If you prefer, you may deliver (by hand or courier) your written comments before the close of the comment period to either of the following addresses:

a. For delivery in Washington, DC—

Centers for Medicare & Medicaid Services, Department of Health and Human Services, Room 445–G, Hubert H. Humphrey Building, 200 Independence Avenue, SW., Washington, DC 20201

(Because access to the interior of the Hubert H. Humphrey Building is not readily available to persons without Federal government identification, commenters are encouraged to leave their comments in the CMS drop slots located in the main lobby of the building. A stamp-in clock is available for persons wishing to retain a proof of filing by stamping in and retaining an extra copy of the comments being filed.)

b. For delivery in Baltimore, MD—

Centers for Medicare & Medicaid Services, Department of Health and Human Services, 7500 Security Boulevard, Baltimore, MD 21244–1850.

If you intend to deliver your comments to the Baltimore address, please call telephone number (410) 786–9994 in advance to schedule your arrival with one of our staff members.

Comments mailed to the addresses indicated as appropriate for hand or courier delivery may be delayed and received after the comment period.

For information on viewing public comments, see the beginning of the **SUPPLEMENTARY INFORMATION** section.

FOR FURTHER INFORMATION CONTACT: Mark A. Horney, (410) 786–4554.

SUPPLEMENTARY INFORMATION:

Inspection of Public Comments: All comments received before the close of the comment period are available for viewing by the public, including any personally identifiable or confidential business information that is included in a comment. We post all comments received before the close of the comment period on the following Web site as soon as possible after they have

been received: *http://www.regulations.gov.* Follow the search instructions on that Web site to view public comments.

Comments received timely will also be available for public inspection as they are received, generally beginning approximately 3 weeks after publication of a document, at the headquarters of the Centers for Medicare & Medicaid Services, 7500 Security Boulevard, Baltimore, Maryland 21244, Monday through Friday of each week from 8:30 a.m. to 4 p.m. To schedule an appointment to view public comments, phone 1–800–743–3951.

I. Background

Organ Procurement Organizations (OPOs) are not-for-profit organizations that are responsible for the procurement, preservation, and transport of transplantable organs to transplant centers throughout the country. Qualified OPOs are designated by the Centers for Medicare & Medicaid Services (CMS) to recover or procure organs in CMS-defined exclusive geographic service areas, pursuant to section 371(b)(1) of the Public Health Service Act (42 U.S.C. 273(b)(1)) and our regulations at 42 CFR 486.306. Once an OPO has been designated for an area, hospitals in that area that participate in Medicare and Medicaid are required to work with that OPO in providing organs for transplant, pursuant to section 1138(a)(1)(C) of the Social Security Act (the Act) and our regulations at 42 CFR 482.45.

Section 1138(a)(1)(A)(iii) of the Act provides that a hospital must notify the designated OPO (for the service area in which it is located) of potential organ donors. Under section 1138(a)(1)(C) of the Act, every participating hospital must have an agreement to identify potential donors only with its designated OPO.

However, section 1138(a)(2)(A) of the Act provides that a hospital may obtain a waiver of the above requirements from the Secretary under certain specified conditions. A waiver allows the hospital to have an agreement with an OPO other than the one initially designated by CMS, if the hospital meets certain conditions specified in section 1138(a)(2)(A) of the Act. In addition, the Secretary may review additional criteria described in section 1138(a)(2)(B) of the Act to evaluate the hospital's request for a waiver.

Section 1138(a)(2)(A) of the Act states that in granting a waiver, the Secretary must determine that the waiver—(1) is expected to increase organ donations; and (2) will ensure equitable treatment of patients referred for transplants within the service area served by the designated OPO and within the service area served by the OPO with which the hospital seeks to enter into an agreement under the waiver. In making a waiver determination, section 1138(a)(2)(B) of the Act provides that the Secretary may consider, among other factors: (1) Cost-effectiveness; (2) improvements in quality; (3) whether there has been any change in a hospital's designated OPO due to the changes made in definitions for metropolitan statistical areas; and (4) the length and continuity of a hospital's relationship with an OPO other than the hospital's designated OPO. Under section 1138(a)(2)(D) of the Act, the Secretary is required to publish a notice of any waiver application received from a hospital within 30 days of receiving the application, and to offer interested parties an opportunity to comment in writing during the 60-day period beginning on the publication date in the **Federal Register**.

The criteria that the Secretary uses to evaluate the waiver in these cases are the same as those described above under sections 1138(a)(2)(A) and (B) of the Act and have been incorporated into the regulations at § 486.308(e) and (f).

II. Waiver Request Procedures

In October 1995, we issued a Program Memorandum (Transmittal No. A–95–11) detailing the waiver process and discussing the information hospitals must provide in requesting a waiver. We indicated that upon receipt of a waiver request, we would publish a **Federal Register** notice to solicit public comments, as required by section 1138(a)(2)(D) of the Act.

According to these requirements, we will review the request and comments received. During the review process, we may consult on an as-needed basis with the Health Resources and Services Administration's Division of Transplantation, the United Network for Organ Sharing, and our regional offices. If necessary, we may request additional clarifying information from the applying hospital or others. We will then make a final determination on the waiver request and notify the hospital and the designated and requested OPOs.

III. Hospital Waiver Requests

As permitted by § 486.308(e), the following hospital has requested a waiver in order to enter into an agreement with a designated OPO other than the OPO designated for the service area in which the hospital is located:

Stafford Hospital (Medicare provider number 49–0140), of Stafford, Virginia, is requesting a waiver to work with: LifeNet Health, 1864 Concert Drive, Virginia Beach, VA 23453.

The Hospital's Designated OPO is: Washington Regional Transplant Consortium, 7619 Little River Turnpike, Suite 900, Annandale, VA 22002.

IV. Collection of Information Requirements

This document does not impose information collection and recordkeeping requirements. Consequently, it need not be reviewed by the Office of Management and Budget under the authority of the Paperwork Reduction Act of 1995 (44 U.S.C. 35).

(Catalog of Federal Domestic Assistance Program No. 93.773, Medicare—Hospital Insurance; Program No. 93.774, Medicare—Supplementary Medical Insurance, and Program No. 93.778, Medical Assistance Program)

Dated: July 15, 2010.

Marilyn Tavenner,

Principal Deputy Administrator and Chief Operating Officer, Centers for Medicare & Medicaid Services.

[FR Doc. 2010–18137 Filed 7–22–10; 8:45 am]

BILLING CODE 4120–01–P

DEPARTMENT OF HEALTH AND HUMAN SERVICES

Centers for Medicare & Medicaid Services

[CMS–5047–N]

Medicare Program; Solicitation for Proposals for the Medicare Imaging Demonstration

AGENCY: Centers for Medicare & Medicaid Services (CMS), HHS.

ACTION: Notice.

SUMMARY: This notice informs interested parties (here in there after referred to as conveners) of an opportunity to apply to participate in the Medicare Imaging Demonstration (MID) that was authorized by section 135(b) of the Medicare Improvements for Patients and Providers Act of 2008 (MIPPA). The goal of the MID is to collect data regarding physician compliance with appropriateness criteria selected by the Secretary under the terms of the statute in order to determine the appropriateness of advanced diagnostic imaging services furnished to Medicare beneficiaries.

DATES: Proposals will be considered timely if they are received on or before 5 p.m., Eastern Standard Time (E.S.T.) on September 21, 2010.

ADDRESSES: Proposals should be mailed to the following address: Centers for Medicare & Medicaid Services, Attention: Linda R. Lebovic, 7500 Security Boulevard, Mail Stop: C4–17–27, Baltimore, Maryland 21244–1850.

FOR FURTHER INFORMATION CONTACT: Linda R. Lebovic at (410) 786–3402 or by e-mail at *ImagingDemo135b@cms.hhs.gov.*

SUPPLEMENTARY INFORMATION:

General Information: Please refer to file code [CMS–5047–N] on the application. Proposals (an unbound original and 3 copies plus an electronic copy on CD–ROM) must be typed for clarity and should not exceed 40 double-spaced pages, exclusive of cover letter, the executive summary, resumes, forms, and supporting documentation. Because of staffing and resource limitations, we cannot accept proposals by facsimile (FAX) transmission. Applicants may, but are not required to, submit a total of 10 copies to assure that each reviewer receives a proposal in the manner intended by the applicant (for example, collated, tabulated color copies). Hard copies and electronic copies must be identical.

Eligible Organizations: CMS anticipates that a wide variety of interested parties may be eligible to apply as conveners or in collaboration with other organizations to perform the responsibilities specified. Examples of conveners include, but are not limited to, medical specialty societies, physician groups, integrated health care delivery systems, independent practice associations, radiology benefit managers, health plans, information technology vendors, and collaborations among the above parties.

I. Provisions of This Notice

This notice informs interested parties (here in there after referred to as conveners) of an opportunity to apply to participate in the Medicare Imaging Demonstration (MID) that was authorized by section 135(b) of the Medicare Improvements for Patients and Providers Act of 2008 (MIPPA). The goal of the MID is to collect data regarding physician compliance with appropriateness criteria selected by the Secretary under the terms of the statute in order to determine the appropriateness of advanced diagnostic imaging services furnished to Medicare beneficiaries. The authorizing legislation allows the Secretary to include in the demonstration advanced diagnostic imaging services such as those defined in § 1834(e)(1)(B) of the Social Security Act (the Act): Diagnostic magnetic resonance imaging (MRI), computed tomography (CT), nuclear medicine (including positron emission tomography) and such other diagnostic imaging services, including services described in § 1848(b)(4)(B) of the Act (excluding X-ray, ultrasound, and fluoroscopy), as specified by the Secretary in consultation with physician specialty organizations and other stakeholders. The law requires that the appropriateness criteria used in the demonstration be based on those developed or endorsed by medical specialty societies. The Centers for Medicare & Medicaid Services (CMS) worked with medical specialty societies and other stakeholders, including the AQA Alliance, to get their input and information on available appropriateness criteria. For purposes of this demonstration, the "appropriateness criteria" referenced in the statute will be published medical specialty society guidelines relevant to the 11 procedures studied in the demonstration that are developed or endorsed by relevant medical specialty societies, are consistent with the spirit of section 135(b)(2)(B)(ii)(II), and which have been selected by the Secretary under the terms of the statute. (We believe the appropriateness criteria are the product of consensus and meet the spirit of section 135(b)(2)(B)(ii)(II) of MIPPA. Consequently, published medical specialty society guidelines relevant for the 11 procedures are included in the demonstration.

The law prohibits the use of prior authorization in the demonstration. The design of the demonstration will permit evaluation of the appropriateness of imaging services across a range of advanced diagnostic imaging studies, geographic areas, demographic characteristics and practice settings (such as private and academic practices) in the Medicare fee-for-service program. CMS is seeking participation by 2,500 to 3,500 physicians from 500 to 650 physician practices that vary in size, specialty mix, type (academic and private practice), and location (urban, rural, and suburban) to obtain substantial sample size for the evaluation.

The demonstration will test whether the use of decision support systems (DSSs) can improve quality of care and reduce unnecessary radiation exposure and utilization by promoting appropriate ordering of advanced diagnostic imaging services. Physician practices will receive feedback on the degree of appropriateness relative to the specified medical specialty society guidelines used under the demonstration.

CMS is seeking conveners that can provide a panel of participating physician practices that agree to use an advanced diagnostic imaging DSS for purposes of this demonstration. The Secretary has chosen to use conveners as a vehicle to recruit physician practices for participation in the demonstration because it is expected that the likely applicants for the convener have well developed relationships (or the ability to establish) with a significant network of physicians that could be potential applicants for participation in the demonstration. Therefore, conveners would be highly effective at providing a robust panel of physicians that could satisfy the selection requirements outlined in the statute. The convener will secure a DSS for advanced diagnostic imaging services that will remain current with the medical specialty society guidelines used under the demonstration, recruit physician practices, and make the DSS available to physician practices participating in the demonstration. Through the DSS, a convener will collect data on physician ordering of the specified services and test results, and provide feedback to physicians on ordering appropriateness. The convener will also distribute payments (as determined by CMS) to the participating practices for reporting data. In this capacity, the convener will be responding to the solicitation on its behalf as applicant. For the demonstration, interested parties may need to collaborate as a convener in order to have a panel of participating physician practices, the availability of the DSS for use by the physician practices, and must comply with demonstration requirements.

A competitive process will be used to select conveners. CMS anticipates selecting up to six conveners to participate in the 2-year demonstration. CMS is aware that certain arrangements under this demonstration could raise possible fraud, waste, and abuse concerns, including concerns under the anti-kickback statute and the physician self-referral law. While CMS has the authority to waive the application of certain fraud, waste, and abuse laws, it is anticipated that doing so, if at all, will only occur after evaluating the provisions of the proposals on a case-by-case basis and considering whether a waiver is necessary to carry out the demonstration project.

Physician practices must apply through a convener and the convener's application must include the criteria and rationale for recruiting physician practices and obtaining their buy-in for the use of the DSS. The Secretary has

chosen to use conveners as a vehicle to recruit physician practices for participation in the demonstration because it is expected that the likely applicants for the convener have well developed relationships (or the ability to establish) with a significant network of physicians that could be potential applicants for participation in the demonstration. Therefore, conveners would be highly effective at providing a robust panel of physicians that could satisfy the selection requirements outlined in the statute. Conveners must also disclose in the application whether the DSS may be retained by the participating practice after the demonstration is concluded and whether the DSS may be used to order items and services other than the subject imaging services.

Applicants must submit their applications in the standard format outlined in CMS' Medicare Waiver Demonstration Application and MID solicitation in order to be considered for review by the technical review panel. Applications not received in this format will not be considered for review.

The Medicare Waiver Demonstration Application can be found electronically at: *http://www.cms.hhs.gov/cmsforms/downloads/cms10069.pdf.*

For specific details regarding the MID, please refer to the solicitation on the CMS Web site at: *http://www.cms.hhs.gov/DemoProjectsEvalRpts/downloads/Medicare_Imaging_Demonstration.pdf.*

II. Collection of Information Requirements

Section 135(b)(4)(A) of the MIPPA (Pub. L. 110–275) exempts this demonstration from the Chapter 35 of Title 44 of the United States Code; however, the collection form entitled "Medicare Demonstration Waiver Application" is currently approved under OMB control number 0938–0880.

(Catalog of Federal Domestic Assistance Program No. 93.773, Medicare—Hospital Insurance; and Program No. 93.774, Medicare—Supplementary Medical Insurance Program)

Dated: April 1, 2010.

Charlene Frizzera,

Acting Administrator, Centers for Medicare & Medicaid Services.

[FR Doc. 2010–18139 Filed 7–22–10; 8:45 am]

BILLING CODE 4120–01–P

DEPARTMENT OF HEALTH AND HUMAN SERVICES

National Institutes of Health

National Institute of General Medical Sciences; Notice of Closed Meeting

Pursuant to section 10(d) of the Federal Advisory Committee Act, as amended (5 U.S.C. App.), notice is hereby given of the following meeting.

The meeting will be closed to the public in accordance with the provisions set forth in sections 552b(c)(4) and 552b(c)(6), Title 5 U.S.C., as amended. The grant applications and the discussions could disclose confidential trade secrets or commercial property such as patentable material, and personal information concerning individuals associated with the grant applications, the disclosure of which would constitute a clearly unwarranted invasion of personal privacy.

Name of Committee: National Institute of General Medical Sciences Special Emphasis Panel, Research Centers in Trauma, Burn, and Peri-Operative Injury (P50).

Date: August 17, 2010.

Time: 1 p.m. to 6 p.m.

Agenda: To review and evaluate grant applications.

Place: Natcher Building, 45 Center Drive, Room 3AN12B, Bethesda, MD 20892.

Contact Person: Margaret J. Weidman, PhD, Scientific Review Officer, Office of Scientific Review, National Institute of General Medical Sciences, National Institutes of Health, 45 Center Drive, Room 3AN18B, Bethesda, MD 20892, 301–594–3663, *weidmanma@mail.nih.gov*.

(Catalogue of Federal Domestic Assistance Program Nos. 93.375, Minority Biomedical Research Support; 93.821, Cell Biology and Biophysics Research; 93.859, Pharmacology, Physiology, and Biological Chemistry Research; 93.862, Genetics and Developmental Biology Research; 93.88, Minority Access to Research Careers; 93.96, Special Minority Initiatives, National Institutes of Health, HHS)

Dated: July 19, 2010.

Jennifer Spaeth,

Director, Office of Federal Advisory Committee Policy.

[FR Doc. 2010–18088 Filed 7–22–10; 8:45 am]

BILLING CODE 4140–01–P

DEPARTMENT OF HEALTH AND HUMAN SERVICES

Centers for Disease Control and Prevention

Advisory Board on Radiation and Worker Health (ABRWH or Advisory Board), National Institute for Occupational Safety and Health (NIOSH)

In accordance with section 10(a)(2) of the Federal Advisory Committee Act (Pub. L. 92–463), and pursuant to the requirements of 42 CFR 83.15(a), the Centers for Disease Control and Prevention (CDC), announces the following meeting of the aforementioned committee:

Board Public Meeting Times and Dates (All times are Eastern Time):

8:15 a.m.–3 p.m., August 10, 2010.
8:15 a.m.–4:15 p.m., August 11, 2010.
8:15 a.m.–12 p.m., August 12, 2010.

Public Comment Times and Dates (All times are Eastern Time):

3:30 p.m.–5 p.m.,* August 10, 2010.
4:30 p.m.–6 p.m.,* August 11, 2010.

* Please note that the public comment periods may end before the times indicated, following the last call for comments. Members of the public who wish to provide public comment should plan to attend public comment sessions at the start times listed.

Place: Shilo Inn Suites Hotel, 780 Lindsay Blvd., Idaho Falls, Idaho; Phone: 208–523–0088; Fax: 208–522–7420. Audio Conference Call via FTS Conferencing. The USA toll free dial in number is 1–866–659–0537 with a pass code of 9933701.

Status: Open to the public, limited only by the space available. The meeting space accommodates approximately 150 people.

Background: The Advisory Board was established under the Energy Employees Occupational Illness Compensation Program (EEOICP) Act of 2000 to advise the President on a variety of policy and technical functions required to implement and effectively manage the new compensation program. Key functions of the Advisory Board include providing advice on the development of probability of causation guidelines which have been promulgated by the Department of Health and Human Services (HHS) as a final rule, advice on methods of dose reconstruction which have also been promulgated by HHS as a final rule, advice on the scientific validity and quality of dose estimation and reconstruction efforts being performed for purposes of the compensation program, and advice on petitions to add classes of workers to the Special Exposure Cohort (SEC).

In December 2000, the President delegated responsibility for funding, staffing, and operating the Advisory Board to HHS, which subsequently delegated this authority to the CDC. NIOSH implements this responsibility for CDC. The charter was issued on August 3, 2001, renewed at appropriate intervals, and will expire on August 3, 2011.

Purpose: This Advisory Board is charged with (a) Providing advice to the Secretary,

HHS, on the development of guidelines under Executive Order 13179; (b) providing advice to the Secretary, HHS, on the scientific validity and quality of dose reconstruction efforts performed for this program; and (c) upon request by the Secretary, HHS, advise the Secretary on whether there is a class of employees at any Department of Energy facility who were exposed to radiation but for whom it is not feasible to estimate their radiation dose, and on whether there is reasonable likelihood that such radiation doses may have endangered the health of members of this class.

Matters to be Discussed: The agenda for the Advisory Board meeting includes: NIOSH Program Update and Program Evaluation Plans; Department of Labor (DOL) Program Update; Department of Energy (DOE) Program Update; Idaho National Laboratory Update; Board Consideration of Discrete Incidents/Health Endangerment; Special Exposure Cohort (SEC) petitions for: Mound Plant, Linde Ceramics Plant (Tonawanda, New York), Ames Laboratory (Ames, Iowa), Revere Copper and Brass (Detroit, Michigan), General Electric (Evendale, Ohio), and Metallurgical Laboratory (Chicago, Illinois); Science Update, SEC Petition Status Updates; Subcommittee and Work Group Reports; and Board Working Time.

The agenda is subject to change as priorities dictate.

In the event an individual cannot attend, written comments may be submitted in accordance with the redaction policy provided below. Any written comments received will be provided at the meeting and should be submitted to the contact person below well in advance of the meeting.

Policy on Redaction of Board Meeting Transcripts (Public Comment), (1) If a person making a comment gives his or her name, no attempt will be made to redact that name. (2) NIOSH will take reasonable steps to ensure that individuals making public comment are aware of the fact that their comments (including their name, if provided) will appear in a transcript of the meeting posted on a public Web site. Such reasonable steps include: (a) A statement read at the start of each public comment period stating that transcripts will be posted and names of speakers will not be redacted; (b) A printed copy of the statement mentioned in (a) above will be displayed on the table where individuals sign up to make public comment; (c) A statement such as outlined in (a) above will also appear with the agenda for a Board Meeting when it is posted on the NIOSH Web site; (d) A statement such as in (a) above will appear in the **Federal Register** Notice that announces Board and Subcommittee meetings. (3) If an individual in making a statement reveals personal information (e.g., medical information) about themselves that information will not usually be redacted. The NIOSH FOIA coordinator will, however, review such revelations in accordance with the Freedom of Information Act and the Federal Advisory Committee Act and if deemed appropriate, will redact such information. (4) All disclosures of information concerning third parties will be redacted. (5) If it comes to the attention of the DFO that an individual wishes to share information with the Board but objects to doing so in a public forum, the DFO will work with that individual, in accordance with the Federal Advisory Committee Act, to find a way that the Board can hear such comments.

Contact Person for More Information: Theodore Katz, M.P.A., Executive Secretary, NIOSH, CDC, 1600 Clifton Road, MS E–20, Atlanta, GA 30333, Telephone (513) 533–6800, Toll Free 1 (800) CDC–INFO, E-mail *ocas@cdc.gov.*

The Director, Management Analysis and Services Office, has been delegated the authority to sign **Federal Register** Notices pertaining to announcements of meetings and other committee management activities, for both CDC and the Agency for Toxic Substances and Disease Registry.

Dated: July 13, 2010.

Elaine L. Baker,

Director, Management Analysis and Services Office, Centers for Disease Control and Prevention.

[FR Doc. 2010–17545 Filed 7–22–10; 8:45 am]

BILLING CODE 4163–18–P

DEPARTMENT OF HEALTH AND HUMAN SERVICES

National Institutes of Health

National Institute of Allergy and Infectious Diseases; Notice of Closed Meeting

Pursuant to section 10(d) of the Federal Advisory Committee Act, as amended (5 U.S.C. App.), notice is hereby given of the following meeting.

The meeting will be closed to the public in accordance with the provisions set forth in sections 552b(c)(4) and 552b(c)(6), Title 5 U.S.C., as amended. The grant applications and the discussions could disclose confidential trade secrets or commercial property such as patentable material, and personal information concerning individuals associated with the grant applications, the disclosure of which would constitute a clearly unwarranted invasion of personal privacy.

Name of Committee: National Institute of Allergy and Infectious Diseases Special Emphasis Panel; T Cell Receptor Signaling Network.

Date: August 19, 2010.

Time: 1 p.m. to 4 p.m.

Agenda: To review and evaluate grant applications.

Place: National Institutes of Health, Rockledge 6700, 6700B Rockledge Drive, Bethesda, MD 20817. (Telephone Conference Call)

Contact Person: Raymond Richard Schleef, PhD, Scientific Review Officer, Scientific Review Program, Division of Extramural Activities, National Institutes of Health/NIAID, 6700B Rockledge Drive, MSC 7616, Bethesda, MD 20892–7616, (301) 451–3679, *schleefrr@niaid.nih.gov.*

(Catalogue of Federal Domestic Assistance Program Nos. 93.855, Allergy, Immunology, and Transplantation Research; 93.856, Microbiology and Infectious Diseases Research, National Institutes of Health, HHS)

Dated: July 19, 2010.

Jennifer Spaeth,

Director, Office of Federal Advisory Committee Policy.

[FR Doc. 2010–18058 Filed 7–22–10; 8:45 am]

BILLING CODE 4140–01–P

DEPARTMENT OF HEALTH AND HUMAN SERVICES

National Institutes of Health

National Institute of Allergy and Infectious Diseases; Notice of Closed Meeting

Pursuant to section 10(d) of the Federal Advisory Committee Act, as amended (5 U.S.C. App.), notice is hereby given of the following meeting.

The meeting will be closed to the public in accordance with the provisions set forth in sections 552b(c)(4) and 552b(c)(6), Title 5 U.S.C., as amended. The grant applications and the discussions could disclose confidential trade secrets or commercial property such as patentable material, and personal information concerning individuals associated with the grant applications, the disclosure of which would constitute a clearly unwarranted invasion of personal privacy.

Name of Committee: National Institute of Allergy and Infectious Diseases Special Emphasis Panel, Pathogenesis/Immunology of Tularemia.

Date: August 17, 2010.

Time: 8:30 a.m. to 12:30 p.m.

Agenda: To review and evaluate grant applications.

Place: National Institutes of Health, 6700B Rockledge Drive, Bethesda, MD 20817. (Telephone Conference Call)

Contact Person: Annie Walker-Abbey, PhD, Scientific Review Officer, Scientific Review Program, NIAID/NIH/DHHS, 6700B Rockledge Drive, Rm 3126, MSC–7616, Bethesda, MD 20892–7616, 301–451–2671, *aabbey@niaid.nih.gov.*

(Catalogue of Federal Domestic Assistance Program Nos. 93.855, Allergy, Immunology, and Transplantation Research; 93.856, Microbiology and Infectious Diseases Research, National Institutes of Health, HHS)

Dated: July 19, 2010.

Jennifer Spaeth,

Director, Office of Federal Advisory Committee Policy.

[FR Doc. 2010–18057 Filed 7–22–10; 8:45 am]

BILLING CODE 4140–01–P

DEPARTMENT OF HEALTH AND HUMAN SERVICES

National Institutes of Health

Center for Scientific Review; Amended Notice of Meeting

Notice is hereby given of a change in the meeting of the Center for Scientific Review Special Emphasis Panel, July 23, 2010, 5:30 p.m. to 6 p.m. The River Inn, 924 25th Street, NW., Washington, DC 20037 which was published in the **Federal Register** on July 15, 2010, 75 FR 41212.

The meeting will be held August 6, 2010. The meeting time and location remain the same. The meeting is closed to the public.

Dated: July 19, 2010.

Jennifer Spaeth,

Director, Office of Federal Advisory Committee Policy.

[FR Doc. 2010–18053 Filed 7–22–10; 8:45 am]

BILLING CODE 4140–01–P

DEPARTMENT OF HEALTH AND HUMAN SERVICES

National Institutes of Health

Center for Scientific Review; Notice of Closed Meeting

Pursuant to section 10(d) of the Federal Advisory Committee Act, as amended (5 U.S.C. App.), notice is hereby given of the following meeting.

The meeting will be closed to the public in accordance with the provisions set forth in sections 552b(c)(4) and 552b(c)(6), title 5 U.S.C., as amended. The grant applications and the discussions could disclose confidential trade secrets or commercial property such as patentable material, and personal information concerning individuals associated with the grant applications, the disclosure of which would constitute a clearly unwarranted invasion of personal privacy.

Name of Committee: Center for Scientific Review Special Emphasis Panel; Molecular Neuroscience.

Date: August 10, 2010.

Time: 1 p.m. to 2:30 p.m.

Agenda: To review and evaluate grant applications.

Place: National Institutes of Health, 6701 Rockledge Drive, Bethesda, MD 20892, (Telephone Conference Call).

Contact Person: Carol Hamelink, PhD, Scientific Review Officer, Center for Scientific Review, National Institutes of Health, 6701 Rockledge Drive, Room 4192, MSC 7850, Bethesda, MD 20892, (301) 213–9887, *hamelinc@csr.nih.gov.*

(Catalogue of Federal Domestic Assistance Program Nos. 93.306, Comparative Medicine; 93.333, Clinical Research, 93.306, 93.333, 93.337, 93.393–93.396, 93.837–93.844, 93.846–93.878, 93.892, 93.893, National Institutes of Health, HHS)

Dated: July 19, 2010.

Jennifer Spaeth,

Director, Office of Federal Advisory Committee Policy.

[FR Doc. 2010–18052 Filed 7–22–10; 8:45 am]

BILLING CODE 4140–01–P

DEPARTMENT OF HEALTH AND HUMAN SERVICES

Agency for Healthcare Research and Quality

Notice of Meeting

In accordance with section 10(d) of the Federal Advisory Committee Act (5 U.S.C., Appendix 2), announcement is made of a Health Care Policy and Research Special Emphasis Panel (SEP) meeting.

A Special Emphasis Panel is a group of experts in fields related to health care research who are invited by the Agency for Healthcare Research and Quality (AHRQ), and agree to be available, to conduct on an as needed basis, scientific reviews of applications for AHRQ support. Individual members of the Panel do not attend regularly-scheduled meetings and do not serve for fixed terms or a long period of time. Rather, they are asked to participate in particular review meetings which require their type of expertise.

Substantial segments of the upcoming SEP meeting listed below will be closed to the public in accordance with the Federal Advisory Committee Act, section 10(d) of 5 U.S.C., Appendix 2 and 5 U.S.C. 552b(c)(6). Grant applications for the AHRQ Grants for Health Services Research Dissertation Program (R36) applications are to be reviewed and discussed at this meeting. These discussions are likely to reveal personal information concerning individuals associated with the applications. This information is exempt from mandatory disclosure under the above-cited statutes.

SEP Meeting on: AHRQ Grants for Health Services Research Dissertation Program (R36) applications.

Dates: August 12, 2010 (Open on August 12 from 10 a.m. to 10:15 a.m. and closed for the remainder of the meeting).

Place: Agency for Healthcare Research and Quality, John Eisenberg Bldg, 540 Gaither Road, Conference Room TBD, Rockville, MD 20850.

Contact Person: Anyone wishing to obtain a roster of members, agenda or minutes of the nonconfidential portions of this meeting should contact Mrs. Bonnie Campbell, Committee Management Officer, Office of Extramural Research, Education and Priority Populations, AHRQ, 540 Gaither Road, Room 2038, Rockville, Maryland 20850, Telephone (301) 427–1554.

Agenda items for this meeting are subject to change as priorities dictate.

Dated: July 13, 2010.

Carolyn M. Clancy,

Director.

[FR Doc. 2010–17798 Filed 7–22–10; 8:45 am]

BILLING CODE 4160–90–M

DEPARTMENT OF HEALTH AND HUMAN SERVICES

Food and Drug Administration

[Docket No. FDA–2010–N–0371]

Voluntary Registration by Authorized Officials of Non-Covered Retail Food Establishments and Vending Machine Operators Electing To Be Subject to the Menu and Vending Machine Labeling Requirements Established by the Patient Protection and Affordable Care Act of 2010

AGENCY: Food and Drug Administration, HHS.

ACTION: Notice.

SUMMARY: Section 4205 of the Patient Protection and Affordable Care Act of 2010 (Affordable Care Act) established requirements for nutrition labeling of standard menu items for restaurants and similar retail food establishments with 20 or more locations doing business under the same name and offering for sale substantially the same menu items (hereinafter "chain retail food establishments"), and for certain foods sold in vending machines operated by an operator that owns or operates 20 or more vending machines (hereinafter "chain vending machine operators"). Under the Affordable Care Act, retail food establishments and vending machine operators not covered by section 4205 of the Affordable Care Act may elect to become subject to its requirements by registering biannually with FDA. Congress required that, within 120 days of enactment of the Affordable Care Act (March 23, 2010), FDA issue a **Federal Register** notice specifying the terms and conditions for implementation of voluntary registration, pending promulgation of regulations. FDA is issuing this notice to assist restaurants and similar retail food establishments and vending machine

operators that are not subject to the menu labeling requirements of section 4205 of the Affordable Care Act, but choose to register to become subject to them, in voluntarily registering with FDA, pending promulgation of regulations.

DATES: Submit electronic or written comments by October 21, 2010.

ADDRESSES: Submit electronic comments on the notice to *http://www.regulations.gov*. Submit written comments on the notice to the Division of Dockets Management (HFA–305), Food and Drug Administration, 5630 Fishers Lane, rm. 1061, Rockville, MD 20852.

FOR FURTHER INFORMATION CONTACT: Kathleen Lewis, Center for Food Safety and Applied Nutrition (HFS–608), Food and Drug Administration, 5100 Paint Branch Pkwy., College Park, MD 20740, 301–436–2148.

SUPPLEMENTARY INFORMATION:

I. Background

Section 4205 of the Affordable Care Act (Public Law 111–148) requires restaurants and similar retail food establishments with 20 or more locations doing business under the same name and offering for sale substantially the same menu items (hereinafter "chain retail food establishments") to disclose specific nutrition information about certain food items offered for sale. Section 4205 also requires that calorie information be disclosed for certain food articles sold in vending machines operated by an operator that owns or operates 20 or more vending machines (hereinafter "chain vending machine operators"). For chain retail food establishments, as that term is used in this notice, and for vending machines regardless of how many vending machines the operator owns or operates, section 4205 preempts State and local nutrition labeling laws unless they are "identical" to the requirements imposed by section 4205.

This notice is to explain how retail food establishments and vending machine operators not otherwise subject to the provisions of section 4205 may voluntarily elect to become subject to them. In future actions, FDA will provide information to the public and the regulated communities about the new requirements in section 4205.

II. Terms and Conditions for Implementation of Voluntary Registration

A. Why is the section 4205 voluntary registration program being established?

Congress provided in section 4205 of the Affordable Care Act that restaurants and similar retail food establishments and vending machine operators not covered by section 4205 may elect to become subject to its requirements by registering biannually (every other year) with FDA. Congress required FDA to publish a notice in the **Federal Register**, within 120 days of enactment of the Affordable Care Act (March 23, 2010), specifying the terms and conditions for implementation of voluntary registration, pending promulgation of regulations.

B. What is the effect of voluntary registration under section 4205?

Unlike chain retail food establishments (as that term is used in this document), restaurants and similar retail food establishments that are not covered by section 4205 can still be regulated under State and local nutrition labeling laws that are not "identical to" the Federal requirements. If these restaurants and similar retail food establishments voluntarily register, they will no longer be subject to State or local nutrition labeling requirements unless those requirements are identical to Federal requirements. Vending machine operators are in a different position; under section 4205, no State or locality may have a requirement concerning vending machines that is not "identical to" the Federal requirements, regardless of how many vending machines the operator owns or operates (section 403A(a)(4) of the Federal Food, Drug, and Cosmetic Act (21 U.S.C. 343–1(a)(4))). Therefore, whether a vending machine operator has or has not registered, it cannot be subject to State or local nutrition labeling requirements that are not identical to the Federal requirements. However, Congress expressly provided in section 4205 that vending machine operators not subject to the requirements of the law might elect to be subject to them by registering with FDA.

C. Who must register?

No restaurant or similar retail food establishment, or vending machine operator, is required to register under section 4205. However, if a restaurant or similar retail food establishment, or vending machine operator not otherwise subject to the provisions of section 4205 elects to be subject to the Federal requirements of that section, registration must be by an authorized official.

D. Who is an authorized official of a restaurant or similar retail food establishment, or of a vending machine operator?

The authorized official of a restaurant or similar retail food establishment or of a vending machine operator may be the owner, operator, agent in charge, or any other person authorized by the restaurant or similar retail food establishment or vending machine operator to register the restaurant, similar retail food establishment and/or vending machine operator with FDA under section 4205.

E. Should a separate registration be submitted for every location at which a restaurant or similar retail food establishment is operating?

Section 4205 applies to restaurants or similar retail food establishments that are part of a chain with 20 or more locations, doing business under the same name (regardless of the type of ownership of the locations, e.g., individual franchisees), and offering for sale substantially the same menu items.

Restaurants, similar retail food establishments, and operators of vending machines doing business at one or more but fewer than 20 locations can register to be subject to section 4205. If a restaurant or similar retail food establishment has more than one but fewer than 20 locations that are doing business under the same name, regardless of the type of ownership of the locations, which offer for sale substantially the same menu items, an authorized official may register multiple locations within the group of restaurants or retail food establishments on a single registration form. Alternatively, an authorized official of an individual restaurant or retail food establishment may register just that restaurant or retail food establishment.

F. When will the registration process begin and how often must the authorized official register?

FDA will accept registrations beginning July 21, 2010, on a continuous basis. The authorized official must register every other year with FDA, and the registration will automatically expire if not renewed.

G. What information must be provided for the registration of restaurants or similar retail food establishments?

Authorized officials for restaurants and similar retail food establishments must provide FDA with the following information:

• The name, address, phone number, e-mail address, and contact information for the authorized official;

• The name, address, and e-mail address of each restaurant or similar retail food establishment being registered, as well as the name and contact information for an official onsite, such as the owner or manager, for each specific restaurant or similar retail food establishment;

• All trade names the restaurant or similar retail food establishment uses;

• Preferred mailing address (if different from location address for each establishment) for purposes of receiving correspondence; and

• Certification that the information submitted is true and accurate, that the person or firm submitting it is authorized to do so, and that each registered restaurant or similar retail food establishment will be subject to the requirements of section 4205.

As described in section II.I of this document, FDA has created and made available at a Web site, *http://www.fda.gov/menulabeling*, a form that contains fields requesting this information. Registrants must use this form to ensure that complete information is submitted.

H. What information must be provided for the registration of vending machine operators?

Authorized officials for vending machine operators must provide FDA with the following information:

• The name, address, phone number, e-mail address, and contact information for the vending machine operator;

• The address of each vending machine owned or operated by the vending machine operator, and the name and contact information, including e-mail address, of the location in which each vending machine is located;

• Preferred mailing address (if different from location address), for purposes of receiving correspondence; and

• Certification that the information submitted is true and accurate, that the person or firm submitting it is authorized to do so, and that each registered restaurant or similar retail food establishment will be subject to the requirements of section 4205.

As described in section II.I of this document, FDA has created and made available at a Web site, *http://www.fda.gov/menulabeling*, a form that contains fields requesting this information. Registrants must use this form to ensure that complete information is submitted.

I. How do authorized officials of restaurants, similar retail food establishments, and vending machine operators register?

Authorized officials of restaurants, similar retail food establishments, and/or vending machine operators electing to be subject to the section 4205 requirements can register by visiting *http://www.fda.gov/menulabeling*. FDA prefers that the information be submitted by e-mail by typing complete information into the form (PDF), saving it on the registrant's computer, and sending it by e-mail to *http://menulawregistration@fda.hhs.gov*. If e-mail is not available, the registrant can either fill in the form (PDF) and print it out (or print out the blank PDF and fill in the information by hand or typewriter), and send it to FDA either by faxing the completed form to 301–436–2804 or mailing it to the Center for Food Safety and Applied Nutrition, Compliance Information Branch (HFS–681), 5600 Fishers Lane, Rockville, MD 20857.

J. Will each registrant receive a confirmation of the registration?

Initially, FDA will not provide automatic confirmation of registrations. We recommend that registrants save a copy of the completed form and evidence that it has been transmitted to FDA electronically, by fax, or by mail.

K. What does it mean to be "registered"?

Pending promulgation of regulations, FDA considers that an authorized official of any restaurant or similar retail food establishment, or of any vending machine operator, that completely and accurately provides the information described in response to sections II.G and II.H of this document, has registered the restaurant or similar retail food establishment, or vending machine operator.

L. How will future changes to the voluntary registration program be announced?

FDA is required to propose regulations implementing the provisions of section 4205. We intend to include in those proposed regulations further specifications about the voluntary biannual registration of restaurants, similar retail food establishments, and vending machine operators that are not otherwise subject to the requirements of section 4205.

III. Paperwork Reduction Act of 1995

This notice refers to previously approved collections of information found in the Federal Food, Drug and Cosmetic Act and established by section 4205 of the Affordable Care Act. These collections of information are subject to review by the Office of Management and Budget (OMB) under the Paperwork Reduction Act of 1995 (44 U.S.C. 3501–3520). The collections of information in section 4205 of the Affordable Care Act have been approved under OMB control number 0910–0664.

IV. Comments

Interested persons may submit to the Division of Dockets Management (see **ADDRESSES**) either electronic or written comments regarding this notice. It is only necessary to send one set of comments. It is no longer necessary to send two copies of mailed comments. Identify comments with the docket number found in brackets in the heading of this document. Received comments may be seen in the Division of Dockets Management between 9 a.m. and 4 p.m., Monday through Friday.

Dated: July 20, 2010.

David Dorsey,

Acting Deputy Commissioner for Policy, Planning and Budget.

[FR Doc. 2010–18123 Filed 7–21–10; 11:15 am]

BILLING CODE 4160–01–S

DEPARTMENT OF HEALTH AND HUMAN SERVICES

National Institutes of Health

Transport of Laboratory Personnel Potentially Exposed to Infectious Agents From Fort Detrick, Frederick, MD to the National Institutes of Health Clinical Research Center, Bethesda, MD; (NIH Transportation EIS); Record of Decision

ACTION: Notice.

SUMMARY: The National Institutes of Health (NIH), a part of the U.S. Department of Health and Human Services (DHHS), has decided, after completion of a Final NIH Transportation EIS and a thorough consideration of the public comments on the Draft NIH Transportation EIS, to implement the Proposed Action, which was identified as the Preferred Alternative in both the Draft EIS and the FEIS. This action involves the transport of laboratory personnel suspected of having potential occupational exposure to infectious agents under study at the NIBC located at Fort Detrick, Maryland, to the Special Clinical Studies Unit at the NIH Bethesda, Maryland Campus for observation and, if necessary, treatment.

FOR FURTHER INFORMATION CONTACT: Valerie Nottingham, Chief of Environmental Quality Branch, DEP,

ORF, NIH, Building 13, Room 2S11, 9000 Rockville Pike, Bethesda, MD 20892. Fax (301) 480–8056. *nihnepa@mail.nih.gov*.

SUPPLEMENTARY INFORMATION:

Decision

After careful review of the environmental consequences in the FEIS for the Transport of Laboratory Personnel Potentially Exposed to Infectious Agents from Fort Detrick, Maryland to the National Institutes of Health Clinical Center, Bethesda, Maryland, and consideration of public comment throughout the NEPA process, the NIH has decided to implement the Proposed Action, described below as the Selected Alternative.

Selected Alternative

The Selected Alternative is the Preferred Alternative, identified in the Draft and Final NIH Transportation EIS as the transport of laboratory personnel suspected of having occupational exposure to infectious agents under study at the NIBC, located at Fort Detrick, Maryland, to the Special Clinical Studies Unit, at the NIH Bethesda, Maryland Campus.

Background

The National Institute of Allergy and Infectious Diseases (NIAID), a component of NIH, is the occupant of an Integrated Research Facility (IRF) at Fort Detrick, Maryland, as part of the National Interagency Biodefense Campus (NIBC). The IRF and other participating agencies within the NIBC will contain specially designed laboratories (referred to as bio-safety level -2, -3, and -4 laboratories) and animal research facilities for conducting biodefense and emerging infectious disease research. It is proposed that laboratory personnel suspected of having potential occupational exposure to infectious agents under study at the NIBC located at Fort Detrick, Maryland, be transported to the Special Clinical Studies Unit at the NIH Bethesda, Maryland Campus for observation and, if necessary, treatment.

The NIH Special Clinical Studies Unit is a state-of-the-art facility located on the NIH Bethesda, Maryland Campus. The special design of the Special Clinical Studies Unit allows for optimal evaluation and treatment of employees with potential occupational exposure to infectious pathogens. This facility will be fully staffed with experts in infectious diseases who will be conducting applied research. This unit could easily be made available to laboratory personnel potentially exposed to infectious pathogens while conducting research within biocontainment laboratories located at Fort Detrick. Evaluation and/or treatment at the Special Clinical Studies Unit would also allow for consultations from prominent infectious disease scientists resident at other facilities of the NIH Bethesda, Maryland Campus.

On June 20, 2008, the NIH published a Notice of Intent (NOI) in the **Federal Register** (73 FR 35145) announcing its intent to prepare the NIH Transportation EIS and start the public scoping period. The scoping period started with the NOI, and continued through August 4, 2008. The NOI also invited interested parties to attend two public scoping meetings which were held on July 8, 2008, at the C. Burr Artz Library, in Frederick, Maryland, and on July 10, 2008, at the Bethesda-Chevy Chase Service Center in Bethesda, Maryland. The NIH invited the public to submit comments during the scoping period by U.S. mail, electronic mail, and through written and verbal comments submitted at the public scoping meetings. All comments received during the public scoping comment period, as well as written and oral comments received at the two public scoping meetings were considered during the preparation of the Draft EIS. A summary of the major comments received from the scoping comment period was included in the Draft EIS.

The Draft NIH Transportation EIS was distributed to interested parties. A notice of availability for the Draft NIH Transportation EIS was published in the **Federal Register** on May 22, 2009 (74 FR 24006). The formal comment period for the Draft NIH Transportation EIS lasted for 60 days beginning on May 25, 2009, and ending on July 24, 2009. During this comment period, public meetings were held in Frederick, Maryland on June 15, 2009, and Bethesda, Maryland on June 18, 2009. In addition, Federal agencies, state and local government entities were provided copies of the Draft NIH Transportation EIS and encouraged to submit comments via the U.S. mail, e-mail, and in person at two public meetings. The NIH considered all comments in evaluating the accuracy and adequacy of the Draft NIH Transportation EIS and to determine whether its text needed to be corrected, clarified, expanded, or otherwise revised. The Draft NIH Transportation was then edited and amended, as appropriate, and a Final EIS prepared. A Comment Resolution Appendix, showing how comments on the draft were addressed, was added to the document as Appendix C.

Alternatives Considered

The Final NIH Transportation EIS analyzed two alternatives, the No Action Alternative and the Proposed Action Alternative; to transport laboratory personnel potentially exposed to infectious agents from Fort Detrick, Maryland to the Special Clinical Studies Unit at the NIH Bethesda, Maryland Campus, for monitoring, evaluation and, if necessary, treatment. The NIH identified the Preferred Alternative as the Proposed Action Alternative based on several factors. First, the special design of the Special Clinical Studies Unit allows for optimal evaluation and treatment of employees with potential occupational exposure to infectious pathogens. This facility will be fully staffed with experts in infectious diseases who will be conducting applied research. This unit could easily be made available to laboratory personnel potentially exposed to infectious pathogens while conducting research from biocontainment laboratories located at Fort Detrick. Evaluation and/or treatment at the Special Clinical Studies Unit would also allow for consultations from infectious disease scientists resident at other facilities of the NIH Bethesda, Maryland Campus. Second, the NIH has taken great care to analyze the safety and security aspects of all such activities and has developed procedures and requirements to assure the safety of employees, visitors, patients, and the surrounding communities. A Vulnerability Assessment (VA) was also developed in order to complement the basic EIS process. This VA, developed on the same premise as a Threat Risk Assessment was developed in accordance with the requirements stipulated in Federal regulations, as specified in Title 9, Part 121, Section 11, and guidance provided by the DHS (FEMA 2007). Based on this VA it was concluded that any risk during transportation was negligible and would not pose an unacceptable level of risk. Any transport of patients would be well coordinated with the NIH, Fort Detrick Directorate of Emergency Services, Frederick County Police, Montgomery County Police, and the Maryland State Police. Based on the potentially exposed individual's condition, security concerns, weather conditions, traffic conditions, and other factors, a transport plan and route would be developed, notification to the appropriate security, police, and fire departments made, and a request for escort services placed with the Maryland State Police.

The NIH considered varying alternative actions, such as upgrading the existing clinic at Fort Detrick, constructing a new facility at Fort Detrick, and the use of existing medical facilities, Frederick Memorial Hospital (FMH) in Frederick, Maryland area. All of these alternative actions were determined to be unable to provide the required level of care for the laboratory personnel who will be working at NIBC. Committing FMH space and staff for the continued observation required for such a situation would impact normal operations, have a negative impact on the quality of medical services FMH could provide on a regular basis, and not provide the potentially exposed individual with the best possible care. Most importantly, however, should these individuals become symptomatic, use of such health care facilities would not provide the level of care necessary for optimal treatment unable to assure an acceptable level of protection of the health and safety of the general public. This possible alternative was, therefore, determined to be unacceptable and was eliminated from further analysis.

Upgrading the existing facility or constructing a health care facility within the Fort Detrick Campus was also considered unreasonable. A treatment health care facility that could provide for an acceptable level of services and allow for an extended stay of individuals potentially exposed to infectious agents and medical staff would require a full time medical and scientific staff. Such a staff would have to be sufficient to meet all potential needs for observation, monitoring and medical care. Such a facility and staff would be inactive most of the time. Such an alternative, moreover, would remove these key scientific experts from other active projects and would be disruptive to ongoing research projects.

Factors Involved in the Decision

Resource Impacts

The FEIS describes potential environmental effects of the Selected Alternative. These potential effects are documented in Chapter 4 of the Final NIH Transportation EIS. Any adverse environmental effects will be avoided or mitigated through strict adherence to procedures and compliance with regulatory and NIH requirements. Potential impacts on air quality and noise levels are all within government standards (Federal, state, and local). The NIH does not expect any long-term negative effects on the environment or on the members of the communities through which transport may occur.

Summary of Impacts

The following is a summary of potential impacts resulting from the Selected Alternative that the NIH considered when making its decision. No adverse cumulative effects were identified during the NEPA process. Likewise, no unavoidable or adverse impacts from implementation of the Selected Alternative were found.

Land Use

The Selected Alternative would not be expected to have the potential to impact existing land use patterns.

Climate

The Selected Alternative would not be expected to have the potential to impact climate.

Air Quality

The Selected Alternative would not be expected to have the potential to significantly impact air quality within the effected area.

Water Resources

The Selected Alternative would not be expected to have the potential to impact water resources within the effected area.

Ecology

The Selected Alternative would not be expected to have the potential to significantly impact the ecology of the affected area.

Parks and Recreational Facilities

The Selected Alternative would not be expected to have the potential to impact the parks and recreational facilities of the effected area.

Socioeconomic Environment

The Selected Alternative would not be expected to have the potential to impact the socioeconomic environment of the effected area.

Environmental Justice

The Selected Alternative would not be expected to have disproportionately high or adverse impact on low income or minority populations of the effected area.

Geology and Soils

The Selected Alternative would not be expected to have the potential to impact the geology or soils of the effected area.

Historic and Archeological Resources

The Selected Alternative would not be expected to have the potential to impact the historical or archeological resources of the effected area.

Noise

The Selected Alternative would not be expected to have the potential to significantly impact existing noise levels of the effected area.

Emergency Response

The Selected Alternative would not be expected to have the potential to impact the delivery of emergency services to the effected area.

Safety and Security

The NIH has established procedures, which include notification of first responder units of the effected area and a request for escort services from the Maryland State Police, prior to any transport of laboratory personnel suspected of incurring occupational exposure to infectious agents while conducting research at the NIBC at Fort Detrick, Maryland to the NIH Bethesda, Maryland Campus. Accordingly, the Selected Alternative would not be expected to have the potential to impact the safety and security of the effected area.

Cumulative Impacts

The Selected Alternative, when considered in conjunction with other known and proposed actions would not be expected to have a significant cumulative impact on the effected area.

Practicable Means To Avoid or Minimize Potential Environmental Harm from the Selected Alternative

All practicable means to avoid or minimize adverse environmental effects from the Selected Action have been identified and incorporated into the action. The proposed action will be subject to the existing NIH pollution prevention, waste management, and safety, security, and emergency response procedures as well as existing environmental permits where applicable. Best management practices, spill prevention and control plans and all safety and security measures will be followed appropriately. All personnel involved in transport would be trained on pre-planned responses in the event of an accident or mechanical failure. All Emergency Response Technicians (EMT) or EMT-Paramedics would be medically certified. No additional mitigation measures have been identified.

Pollution Prevention

All federal, state, and local requirements to protect the environment and public health will be met with the Selected Alternative.

Monitoring and Enforcement Program

The NIH will develop a monitoring and enforcement program to ensure that all practicable mitigation measures developed for under the Selected Alternative are fully implemented.

Conclusion

Based upon review and careful consideration, the NIH has decided to implement the Selected Alternative.

The decision was based upon review and careful consideration of the potential impacts identified in the FEIS and public comments received throughout the NEPA process.

Date: July 19, 2010.

Daniel G. Wheeland,

Director, Office of Research Facilities Development and Operations, National Institutes of Health.

[FR Doc. 2010–18106 Filed 7–22–10; 8:45 am]

BILLING CODE 4140–01–P

DEPARTMENT OF HEALTH AND HUMAN SERVICES

Administration for Children and Families

Request for Public Comment and Consultation Meetings on the Adoption and Foster Care Analysis and Reporting System (AFCARS)

AGENCY: Department of Health and Human Services, Administration for Children and Families, Administration on Children, Youth and Families, Children's Bureau.

ACTION: Request for Public Comment and Consultation Meetings on the Adoption and Foster Care Analysis and Reporting System (AFCARS).

SUMMARY: Section 479 of the Social Security Act (the Act) requires that the Administration for Children and Families (ACF) develop and write regulations to implement a system for the collection by title IV–E agencies of data relating to adoption and foster care. The resultant Adoption and Foster Care Analysis and Reporting System (AFCARS) has been operating since 1994 and is administered by the Children's Bureau (CB) in ACF. AFCARS collects case level information on all children in foster care for whom the title IV–E agency has responsibility for placement and care and on children adopted under the auspices of the title IV–E agency. We issued a Notice of Proposed Rulemaking (NPRM) on January 11, 2008 (73 FR 2082) that proposed to amend the AFCARS regulations at 45 CFR 1355.40 and the appendices to part 1355 [*http://edocket.access.gpo.gov/2008/E7-24860.htm*]. The proposal would modify the requirements for title IV–E agencies to collect and report data to ACF on children in out-of-home care and in subsidized adoption or guardianship arrangements with the title IV–E agency. Due to the enactment of the Fostering Connections to Success and Increasing Adoptions Act of 2008 (Pub. L. 110–351) and the substantial changes it introduced in title IV–E, we intend to issue a new AFCARS NPRM. To inform development of the new NPRM we request that interested parties comment on the questions below.

DATES: Written comments must be submitted to the office listed in the **ADDRESSES** section below on or before October 21, 2010. Please see **SUPPLEMENTARY INFORMATION** for additional details on consultation meetings.

ADDRESSES: Interested persons may submit written comments by any of the following methods:

- *Federal eRulemaking Portal: http://www.regulations.gov.* Follow the instructions for submitting comments.
- *E-mail: CBComments@acf.hhs.gov.* Please include "Comments on AFCARS **Federal Register** Notice" in the subject line of the message.
- *Mail or Courier Delivery:* Jan Rothstein, Division of Policy, Children's Bureau, Administration on Children, Youth and Families, Administration for Children and Families, 1250 Maryland Avenue, SW., 8th Floor, Washington, DC 20024.

Instructions: Please be aware that mail sent to us may take an additional 3–4 days to process due to changes in mail handling resulting from the anthrax crisis of October 2001. If you choose to use an express, overnight, or other special delivery method, please ensure first that they are able to deliver to the above address. We urge you to submit comments electronically to ensure they are received in a timely manner. All comments received will be posted without change to *http://www.regulations.gov* including any personal information provided. Comments provided to us during a meeting or in writing in response to this **Federal Register** notice will receive equal consideration by ACF.

FOR FURTHER INFORMATION CONTACT: Jan Rothstein, Children's Bureau, 1250 Maryland Ave., SW., 8th Floor, Washington, DC 20024; (202) 401–5073.

SUPPLEMENTARY INFORMATION: Please respond to any or all of the questions below. It would be helpful if your comment identifies the question to which you are responding. If you have additional comments, please identify them by citing to 45 CFR part 1355 or the 2008 NPRM, as applicable.

Reporting Population

Fostering Connections provides Tribes with the option to operate a foster care, adoption assistance and, at tribal option, a kinship guardianship assistance program under title IV–E of the Social Security Act (the Act). The Secretary is to apply title IV–E of the Act to Tribes operating the program directly in the same manner as to States except where directed by law. Further, Tribes continue to have the ability to enter into title IV–E agreements with States to operate part of the program on behalf of Indian children.

1. How should data collection and reporting requirements in AFCARS change for State and Tribal title IV–E agencies, if at all, to provide a comprehensive national picture of children in foster care and those adopted with the involvement of a title IV–E agency?

In the 2008 NPRM, we proposed expanding the reporting populations to include children placed in the child welfare agency's responsibility for placement and care wherever they are placed and to include children in subsidized guardianships. We believed this information would facilitate a greater understanding of a child's entire out-of-home care experience, which in turn affects the foster care experience and permanency outcomes.

2. Under what circumstances should a child be included in the AFCARS reporting population for foster care, adoption or guardianship?

- What are the barriers to obtaining information on *all* children in a child welfare agency's placement and care responsibility?
- What information should an agency collect on children in its placement and care responsibility who are placed in detention, psychiatric facilities and other settings other than foster family homes, group homes and child care institutions?
- What information do agencies currently collect on children in finalized adoptions and guardianships?

Federal Oversight Activities

The Children's Bureau uses AFCARS data to support a number of our oversight activities in relation to the title IV–B and IV–E plans, including the Child and Family Services Reviews.

3. What case level data on foster care, adoption and guardianship is important for agencies to collect and report to ACF on an ongoing basis that can inform future Federal monitoring activities,

such as the Child and Family Services Reviews?

• Is there data related to safety, permanency and well-being that is essential to monitoring activities that is not collected currently?

Fostering Connections to Success and Increasing Adoptions Act

Fostering Connections created a number of new title IV–E plan provisions and provided Federal funds for agencies that choose to support older youth up to age 21 and children in guardianships.

4. What case level data would support the monitoring of compliance by title IV–E agencies and outcomes for children in relation to the new provisions?

• Fostering Connections requires that an agency ensure that children receiving title IV–E are enrolled in school or have graduated, that an educational stability plan is in place for children in foster care; and, provides Federal reimbursement of some costs to transport a child in foster care to his/her original school. What data would be important to collect with regard to a child's education in relation to these provisions?

• Fostering Connections allows agencies to provide extended assistance up to age 21 for youth in foster care, and certain youth adopted or in guardianships when such youth reach age 18 if they participate in education or employment activities or are unable to do so. What data would be important to collect with regard to these youth in relation to these provisions?

• Fostering Connections requires agencies to notify relatives when a child is placed into foster care and offer them information on how they can be a placement resource for the child and also encourages agencies to place siblings together or facilitate frequent contact, unless doing so is inappropriate. What data is important to collect with regard to relatives and siblings in relation to these provisions?

Circumstances Prior to Removal

In the 2008 NPRM, we proposed detailed data describing the members of the household or the facilities in which children resided prior to entering foster care.

5. What data, if any, should be collected from child welfare agencies to provide insight into from whom, or from what environment a child is removed for the purposes of foster care and the circumstances that surround the child's removal?

Circumstances During Stay in Foster Care

In the 2008 NPRM, we requested that agencies provide us detailed information on circumstances, such as lack of housing, substance abuse, and mental health issues, facing a child and family during several points during the child's stay in foster care.

6. What data, if any, should be collected from child welfare agencies to provide insight into why a child remains in foster care or why a child's permanency plan is selected or changed?

Caseworker Visits

The title IV–B, subpart 1 child welfare services program requires agencies to ensure that children are visited by caseworkers at least monthly and that the majority of those visits occur in the child's residence.

7. What information, if any, about caseworker visits with a child is essential to collect?

Please provide information on any additional factors we should consider in proposing revisions to AFCARS. ACF will analyze the comments and utilize them to determine the necessary next steps to improve AFCARS.

Additional Consultation Opportunities: In addition to this opportunity to inform development of the new NPRM, we plan to hold four in-person consultations in ACF Regions VI, VII, VIII, and X and two webinars.

We invite State representatives and Tribal leaders and/or their representatives of federally recognized Tribes to attend the in-person meetings or webinars to provide their input on the questions raised above. Teleconference lines will also be available during these in-person sessions. Any person who would like to attend one of the Regional consultation sessions in-person or via phone must register at least one week in advance of the meeting date by contacting the applicable Children's Bureau (CB) Regional Program Manager. Registered participants for the consultation session may submit written remarks in advance, or present them in oral or written form at the consultation session. Any person who would like to participate in one of the webinars should register via the website for each webinar below. Persons may also provide written comments as noted in the **ADDRESSES** section, regardless of their participation in an in-person session or webinar. Finally, please note that Federal representatives attending the consultation sessions will not be able to respond directly during the session to the concerns or questions raised by participants. The consultation sessions and contact information are listed below:

Webinar #1: September 8, 2010 2:30 EDT.

Webinar #2: September 15, 2010 2:30 EDT.

Register for the webinar of your choice by contacting the National Resource Center for Data and Technology at *http://www.nrccwdt.org.*

Region VI—October 5, 2010, 9:30–11:30 CDT

1301 Young Street, Room 1119, Dallas, TX 75202; *Contact:* Janis Brown, CB Regional Program Manager, phone (214) 767–9648 or e-mail *janis.brown@acf.hhs.gov.*

Region VII—September 17, 2010, 9:30–11:30 CDT

601 E 12th Street, Kansas City, MO 64106; *Contact:* Rosalyn Wilson, CB Regional Program Manager, phone (816) 426–3981 or e-mail *rosalyn.wilson@acf.hhs.gov.*

Region VIII—September 22, 2010, 9:30–11:30 MDT

Byron Rogers Federal Building, 1961 Stout Street, Denver, CO 80294; *Contact:* Marilyn Kennerson, CB Regional Program Manager, phone (303) 844–3100 or e-mail *marilyn.kennerson@acf.hhs.gov.*

Region X—September 23, 2010, 9:30–11:30 PDT

2201 Sixth Avenue, Seattle, WA 98121–1827; *Contact:* Tina Minor, CB Regional Program Manager, phone (206) 615–2482 or e-mail *tina.minor@acf.hhs.gov.*

Dated: July 15, 2010.

Bryan Samuels,

Commissioner, Administration on Children, Youth and Families.

[FR Doc. 2010–18042 Filed 7–22–10; 8:45 am]

BILLING CODE 4184–25–P

DEPARTMENT OF HEALTH AND HUMAN SERVICES

Administration for Children and Families

Request for Public Comment Concerning the Redesign of Statewide Automated Child Welfare Information System (SACWIS) Requirements

AGENCY: Department of Health and Human Services, Administration for Children and Families, Administration on Children, Youth and Families, Children's Bureau.

ACTION: Request for Public Comment Concerning the Redesign of Statewide

Automated Child Welfare Information System (SACWIS) Requirements.

SUMMARY: Sections 474(a)(3)(C) and (D) of the Social Security Act (the Act) provide States with the opportunity to access additional funding through title IV–E to plan, design, develop, implement, and operate a Statewide Automated Child Welfare Information System (SACWIS). The regulations at 45 CFR 1355.50–1355.57 were established in response to this legislation and were issued on December 22, 1993.

Several major legislative initiatives, including the Fostering Connections to Success and Increasing Adoptions Act of 2008 (Pub. L. 110–351), hereafter referred to as Fostering Connections, have been enacted since SACWIS regulations were finalized, and have had a significant impact on child welfare practice and the Information Technology (IT) systems used to support these programs. Given the breadth of these changes, we believe it is time to review and consider whether we should amend the current regulations at 45 CFR 1355.50–1355.57 to ensure that they comport with requirements in titles IV–B and IV–E of the Act, support title IV–E agencies seeking to use new technological tools to meet legislative requirements, and support programmatic initiatives, while providing additional flexibility to title IV–E agencies as permitted under law.

DATES: Written comments must be submitted to the office listed in the **ADDRESSES** section below on or before October 21, 2010.

ADDRESSES: Interested persons may submit written comments by any of the following methods:

- *Federal eRulemaking Portal: http://www.regulations.gov*. Follow the instructions for submitting comments.
- *E-mail: DSSComments@acf.hhs.gov.* Please include "Comments on SACWIS **Federal Register** Notice" in the subject line of the message.
- *Mail or Courier Delivery:* Terry Watt, Director, Division of State Systems, Children's Bureau, Administration on Children, Youth and Families, Administration for Children and Families, 1250 Maryland Avenue, SW., 8th Floor, Washington, DC 20024.

Instructions: Please be aware that mail sent to us may take an additional 3–4 days to process due to changes in mail handling resulting from the anthrax crisis of October 2001. If you choose to use an express, overnight, or other special delivery method, please ensure first that they are able to deliver to the above address during the normal workweek. We urge you to submit comments electronically to ensure they are received in a timely manner. All comments received will be posted without change to *http://www.regulations.gov* including any personal information provided.

FOR FURTHER INFORMATION CONTACT: Terry Watt, Director, Division of State Systems, Children's Bureau, 1250 Maryland Ave, SW., 8th Floor, Washington, DC 20024; (202) 690–8177.

SUPPLEMENTARY INFORMATION:

SACWIS Background

Sections 474(a)(3)(C) and (D) of the Act provide Federal funding for the planning, development and operation of a SACWIS. This funding was prompted by a critical need to provide: (1) More efficient, economical, and effective administration of the programs under titles IV–B and IV–E; and (2) support for automated systems in a comprehensive fashion to improve practices and ultimately result in better service delivery to children and families served by title IV–E agencies.

Current SACWIS regulations mandate that:

- Title IV–E agencies must build or have a comprehensive IT case management system with centralized, uniform functionality in order to qualify for a favorable cost allocation methodology and additional Federal Financial Participation (FFP).
- The system must collect and maintain the information needed for the Adoption and Foster Care Annual Reporting System (AFCARS) report.
- To the extent practicable, the system must provide for an interface with the title IV–E agency's child abuse and neglect data system and the systems used to support the title IV–A, IV–D, and XIX programs.

An Interim Final Rule concerning the requirements for States seeking to pursue enhanced funding for the development and operation of SACWIS systems was published in the **Federal Register** on December 22, 1993 (58 FR 67939). The Final Rule was published on May 19, 1995 and codified in Federal regulations at 45 CFR 1355.50–1355.57.

Limitations of Current SACWIS Regulations

Federal child welfare laws have changed considerably since the SACWIS regulations were issued fifteen years ago due to the enactment of several major child welfare legislative initiatives. For example, the Fostering Connections legislation made a number of changes to the title IV–E program including an option for Tribes to directly operate their own title IV–E programs. The resulting changes in statutes and policy have significantly influenced child welfare practices and the supporting automated systems. Title IV–E agency practice models have also changed, with some agencies using a mix of public and private agencies to provide services to children and families.

In addition to the legislative changes previously noted, information technology (IT) has grown more flexible. IT strategies, such as data standardization, Enterprise Architecture and Service Oriented Architecture have the potential to help title IV–E agencies integrate data and functions from disparate systems to meet program goals. However, current SACWIS regulations, as written, may limit IT options for meeting program needs of State and Tribal title IV–E agencies.

Opportunity to Comment

The Children's Bureau is committed to providing title IV–E agencies with additional flexibility to implement technological options they need to build economical, efficient, and effective information systems that support child welfare policy and practice. We are beginning the process of reviewing SACWIS regulations to consider providing title IV–E agencies with increased flexibility to design information systems to support child welfare policy and practice. Therefore we are soliciting comments from interested parties. Please comment on any aspects of SACWIS that you wish. We are particularly interested in obtaining input on:

1. What requirements in current SACWIS regulations inhibit or support the development of efficient, effective, and economical case management systems?
2. How can States and Tribes maintain the consistency of data that is defined, collected, and maintained in multiple systems to ensure a common understanding of the families' history and circumstances across the different systems, including the system(s) used to submit Federal reports?
3. What data do States and Tribes consider critical to their business practice model? Are there data needs for managing the title IV–E program that are not easily met by SACWIS systems and how are those data needs currently being addressed?
4. How can the systems used by States or Tribes be designed to support the seamless management of data across multiple systems over time? (*e.g.,* when systems are replaced; when provider contracts expire or are terminated; or when families move from one provider to a different provider using a different system.)

5. How can the SACWIS regulations be modified to encourage flexibility and support different practice models while ensuring standardized data is available as needed?

ACF will consider the comments after the comment period closes to further assess SACWIS regulations.

Dated: July 15, 2010.

Bryan Samuels,

Commissioner, Administration on Children, Youth and Families.

[FR Doc. 2010–18038 Filed 7–22–10; 8:45 am]

BILLING CODE 4184–25–P

DEPARTMENT OF HEALTH AND HUMAN SERVICES

Centers for Disease Control and Prevention

Statement of Organization, Functions, and Delegations of Authority

Part C (Centers for Disease Control and Prevention) of the Statement of Organization, Functions, and Delegations of Authority of the Department of Health and Human Services (45 FR 67772–76, dated October 14, 1980, and corrected at 45 FR 69296, October 20, 1980, as amended most recently at 75 FR 34465, dated June 9, 2010) is amended to reflect the substructure of the National Center for Emerging and Zoonotic Infectious Diseases, Office of Infectious Diseases, Centers for Disease Control and Prevention.

Section C–B, Organization and Functions, is hereby amended as follows:

After the title and functional statements for the National Center for Immunization and Respiratory Diseases (CVG), insert the following:

National Center for Emerging and Zoonotic Infectious Diseases (CVL). The National Center for Emerging and Zoonotic Infectious Diseases (NCEZID) works to prevent and control a broad range of infectious diseases through public leadership, partnerships, science, and systems. In carrying out these activities, NCEZID: (1) Works collaboratively across CDC and with external partners to conduct, coordinate, support, and evaluate public health efforts to prevent and minimize morbidity and mortality due to infectious diseases, promoting a One Health approach involving the interface of animal, human, and environmental factors; (2) develops, evaluates, and advances science, programs, management, and operations toward meeting the agency's infectious disease related mission and goals; (3) conducts epidemiologic and laboratory science and applied research aimed at identifying risk factors and disease burdens and developing and implementing public health programs, practices, and policies for infectious disease prevention and control; (4) works with domestic and global partners to provide technical and subject matter expertise in responding to outbreaks and in establishing, maintaining, and evaluating disease control and prevention programs; (5) supports a broad range of cross-cutting and collaborative programs aimed at enhancing public health capacity at the local, State, and national levels; (6) works to improve the quality and safety of healthcare through efforts to reduce healthcare associated infections and antimicrobial resistance and to ensure the safety of medical products, including vaccines; (7) conducts activities to improve the safety of food and water and reduce related enteric illnesses; (8) administers a national quarantine program to prevent U.S. importation and spread of infectious diseases; (9) works with CDC colleagues and external partners to improve public health preparedness at the local, State, and national levels; and (10) works to increase public health prevention efforts for populations at increased risk for infectious diseases.

Office of the Director (CVL1). (1) Provides leadership in developing, prioritizing, advancing, and evaluating the center's science, programs, management, and operations toward meeting agency mission and goals; (2) advises the CDC Director and Deputy Director for Infectious Diseases on priority issues affecting the center; (3) identifies and facilitates synergies within NCEZID, across CDC, and with external partners for addressing emerging and zoonotic infectious diseases domestically and globally; (4) enhances collaborations and partnerships across multiple disciplines, including human and animal health; (5) ensures scientific quality and ethical and regulatory compliance of center activities; (6) provides leadership, guidance, and technical assistance on policy and communication issues affecting the center; (7) serves as liaison with CDC counterparts, CDC/OD, other government agencies, and external partners on policy, program, legislative, communication, and budgetary issues related to NCEZID; (8) recruits and supports a strong center-wide workforce and builds leadership at the division and branch levels; (9) ensures that programmatic goals are achieved with measurable impact; and (10) ensures effective administrative services for NCEZID as well as effective cross-cutting scientific and program services for all CDC's infectious disease national centers.

Food Safety Office (CVL12). (1) Provides leadership in preventing and controlling foodborne illness by coordinating related activities within CDC and with other local, State, Federal, and international organizations; (2) directs the activities related to development of long-term NCEZID, OID, and CDC strategies, policies, and budgets for foodborne disease prevention activities; (3) allocates and tracks interagency resources within CDC for foodborne disease surveillance, outbreak response, applied research, education and training; (4) administers and tracks resources for foodborne disease prevention and control activities of State and local health departments and other organizations; (5) represents NCEZID and CDC programs and prevention policies in meetings with governmental, non-governmental, private, and international organizations; (6) reviews, prepares, and coordinates congressional testimony and briefing documents related to foodborne diseases, and analyzes programmatic and policy implications of legislative proposals; and (7) provides direction and administrative support to the World Health Organization (WHO) Collaborating Center for Foodborne Disease Surveillance.

Division of Foodborne, Waterborne, and Environmental Diseases (CVLB). The mission of the Division of Foodborne, Waterborne, and Environmental Diseases (DFWED) is to improve public health nationally and internationally through the prevention and control of disease, disability, and death caused by foodborne, waterborne, and environmentally-transmitted infections. In carrying out its mission, DFWED: (1) Conducts surveillance, investigations, and studies of foodborne bacterial diseases, waterborne bacterial and parasitic diseases, and mycotic diseases to define disease etiology and develop effective methods for diagnosis, prevention, and control; (2) conducts or participates in clinical, field, and laboratory research to develop, evaluate, and improve laboratory methodologies, materials, and therapeutic practices used for environmental detection, diagnosis, treatment, investigation, and control of foodborne bacterial diseases, waterborne bacterial and parasitic diseases, and mycotic diseases; (3) fosters and coordinates environmental microbiology research activities at CDC through the Environmental Microbiology Workgroup, partnerships, and advocacy activities to promote research on preventing infectious disease transmission from the environment to humans; (4) provides epidemic aid and epidemiologic consultation, upon request, to State and local health departments, other Federal agencies, and national and international health organizations; (5) provides reference/diagnostic services for foodborne bacterial diseases, waterborne bacterial and parasitic diseases, and mycotic diseases to State and local health departments, other Federal agencies, and national and international health organizations; (6) provides scientific and technical assistance to other CDC components when the work requires unique expertise or specialized equipment not available in other components; (7) provides intramural and extramural technical expertise and assistance in professional training and proficiency testing activities; (8) serves as appropriately designated national and international reference centers for various foodborne bacterial diseases, waterborne bacterial and parasitic diseases, and mycotic diseases and disease groups; and (9) develops clear health promotion strategies, campaigns, and messages to promote prevention.

Office of the Director (CVLB1). (1) Directs and manages the programs and activities of DFWED; (2) provides leadership and guidance on policy, program planning and development, program management, and operations; (3) coordinates or assures coordination with the appropriate CDC and

NCEZID offices on administrative and program matters; (4) reviews, prepares, and coordinates congressional testimony and briefing documents related to foodborne bacterial diseases, waterborne bacterial and parasitic diseases, and mycotic diseases, and analyzes programmatic and policy implications of legislative proposals; (5) represents CDC and NCEZID programs and prevention policies in meetings with governmental, private, and international organizations; (6) advises CDC and NCEZID on policy matters concerning DFWED programs and activities; (7) provides statistical methodology and participates in the DFWED's outbreak investigations and disease reporting systems for ongoing surveillance; (8) develops new methods or adapts existing methods for statistical applications in epidemiologic or laboratory research studies for the division; (9) provides statistical consultation for epidemiologic and laboratory research studies conducted by the division; (10) assists researchers with statistical aspects of report writing and prepares statistical portions of papers, protocols, and reports written by staff of the division, and trains division professional staff in statistical methods; (11) provides oversight for CDC involvement in the WHO Global Foodborne Infections Network and training in food, water, and zoonotic infection control and prevention; and (12) provides subject matter expertise on environmental research, and promotes and coordinates related research activities at CDC and with collaborative partners.

Division of Global Migration and Quarantine (CVLC). (1) Administers a national quarantine program to protect the U.S. against the introduction of diseases from foreign countries and the transmission of communicable disease between states; (2) administers an overseas program for the medical examination of immigrants, refugees, and as necessary, other migrant populations destined for legal entry to the U.S., with inadmissible health conditions that would pose a threat to public health and impose a burden on public health and hospital facilities; (3) conducts surveillance, research, and prevention programs to prevent minimize morbidity and mortality among the globally mobile populations entering and leaving the U.S.; (4) maintains liaison with other Federal agencies, State and local health departments, and other stake holders, and provides information on global migration and quarantine matters to them; (5) provides liaison with international health organizations and participates in the development of international agreements affecting quarantine; (6) evaluates and provides technical support on the development and enforcement of policies necessary for implementation of Federal quarantine authority; (7) conducts studies to provide new information about health hazards abroad, measures for their prevention, and the potential threat of disease introduction into the U.S.; and (8) provides logistic support to other programs of the CDC in the distribution of requested biological agents and movement of biological specimens through U.S. ports of entry.

Office of the Director (CVLC1). (1) Manages, directs, and coordinates the activities of the division; (2) provides leadership in development of division policy, program planning, implementation, and evaluation; (3) identifies needs and resources for new initiatives and assigns responsibilities for their development; (4) coordinates liaison with other Federal agencies, State and local health departments, and interested industries; (5) coordinates liaison with international health organizations; and (6) reviews and evaluates all administrative services for both headquarters and quarantine stations and provides policy procedures and guidance on such matters.

Division of Healthcare Quality Promotion (CVLD). The mission of the Division of Healthcare Quality Promotion (DHQP) is to protect patients; protect healthcare personnel; and promote safety, quality, and value in both national and international healthcare delivery systems. In carrying out its mission, DHQP: (1) Measures, validates, interprets, and responds to data relevant to healthcare processes and outcomes, healthcare-associated infections, antimicrobial resistance, adverse drug events, and other related adverse events or medical errors in healthcare affecting patients and healthcare personnel; (2) investigates and responds to emerging infections and related adverse events among patients and healthcare providers, or others associated with the healthcare environment; (3) collaborates with academic and public health partners to design, develop, and evaluate the efficacy of interventions for preventing infections and reducing antimicrobial resistance, and related adverse events or medical errors; (4) develops and disseminates evidence-based guidelines and recommendations to prevent and control healthcare-associated infections/antimicrobial resistance, and related adverse events or medical errors; (5) promotes the nationwide implementation of Healthcare Infection Control Practices Advisory Committee (HICPAC) recommendations and other evidence based interventions to prevent healthcare-associated infections, antimicrobial resistance, and related adverse events or medical errors among patients and healthcare personnel; evaluates the impact of these recommendations and interventions across the spectrum of healthcare delivery sites; (6) monitors vaccine safety and conducts scientific research to evaluate the safety of all currently available and new vaccines; (7) develops, implements, and evaluates the effectiveness and impact of interventions to prevent transmission of healthcare-associated human immunodeficiency virus (HIV) and other bloodborne pathogen infections; (8) develops and evaluates diagnostic instruments and novel laboratory tests to detect and characterize antimicrobial-resistant bacterial pathogens and the infections that they cause; (9) promotes high standards of water quality in healthcare settings and tests and assures the water quality for CDC's infectious disease laboratories; (10) conducts epidemiologic, and basic and applied laboratory research to identify new strategies to prevent infections/antimicrobial resistance, and related adverse events or medical errors, especially those associated with medical or surgical procedures, indwelling medical devices, contaminated products, dialysis, and water; (11) establishes evidence-base for surface decontamination by performing laboratory research on methods for surface sampling detection of selected organisms related to preventing healthcare associated infections; (12) serves as the National Reference Laboratory for the identification and antimicrobial susceptibility testing of staphylococci, anaerobic bacteria, non-tuberculous mycobacterial, and those gram-negative bacilli causing healthcare associated infections; (13) develops and maintains the National Healthcare Safety Network (NHSN), a tool for monitoring healthcare-associated infections, measuring healthcare outcomes and processes, and monitoring healthcare worker vaccination and selected health measures in healthcare facilities; (14) continually assesses rates of infections caused by resistant-bacteria in the U.S. through active surveillance, review of national healthcare data sets, and laboratory surveillance programs; (15) promotes the integration of the healthcare delivery system in Federal/State/local public health preparedness planning; (16) coordinates activities, guidance, and research related to infection control across the agency and with national and international partners; (17) collaborates with other CDC Centers/Institute/Offices (CIO) and partners to assure quality clinical microbiology laboratory practices through proficiency testing, educational programs, and training of personnel; (18) trains Epidemic Intelligence Service Officers and other trainees; (19) coordinates antimicrobial resistance activities at CDC; (20) works in a national leadership capacity with public and private organizations to enhance antimicrobial resistance prevention and control, surveillance and response, and applied research; and (21) coordinates blood, organ, and other tissue safety at CDC.

Office of the Director (CVLD1). (1) Manages, directs, and coordinates the activities of the DHQP; (2) provides leadership and guidance on policy, communications/media, program planning and development, program management, and operations; (3) provides DHQP-wide administrative and program services and coordinates or ensures coordination with the appropriate CIOs and CDC staff offices on administrative and program matters; (4) provides liaison with other governmental agencies, international organizations, and other outside groups; (5) coordinates, in collaboration with the appropriate CIO and CDC components, global health activities relating to the prevention of healthcare-associated infections/antimicrobial resistance, and related adverse events or medical errors; (6) coordinates activities, guidance, emergency response, and research related to infection control in healthcare settings across the agency and with national and international partners; (7) works with other Federal agencies, State governments, medical societies, and other public and private organizations to promote collaboration and to integrate healthcare preparedness in Federal/State/local public

health preparedness planning; (8) oversees the coordination of antimicrobial resistance activities at CDC; (9) represents CDC as co-chair of the Federal Interagency Task Force on Antimicrobial Resistance; (10) coordinates with other agencies, State governments, medical societies, and other public and private organizations to enhance antimicrobial resistance prevention and control, surveillance and response, and applied research; (11) leads CDC's activities on blood, organ, and other tissue safety; (12) represents CDC on the Advisory Committee on Blood Safety and Availability and the Advisory Committee on Organ Transplantation; (13) works with other Federal agencies, State governments, and other public and private organizations to enhance blood, organ, and other tissue safety through coordination of investigation, prevention, response, surveillance, applied research, health communication, and public policy; (14) provides program and administrative support for HICPAC; and (15) advises the Director, NCEZID, on policy matters concerning DHQP activities.

Immunization Safety Office (CVLD12). (1) Assesses the safety of vaccines received by children, adolescents and adults; (2) coordinates vaccine safety activities at CDC; (3) monitors safety of new and currently available vaccines; (4) coordinates and maintains the Vaccine Adverse Event Reporting System and Vaccine Safety Datalink; (5) leads CDC' s scientific research to evaluate the safety of all currently available and new vaccines; and (6) works with other Federal agencies, State governments, and other public and private organizations to assess and promote the safety of vaccines.

Division of High-Consequence Pathogens and Pathology (CVLE). The Division of High-Consequence Pathogens and Pathology (DHCPP) maximizes public health and safety nationally and internationally through the diagnosis, prevention, and control of disease, disability, and death caused by suspected and known viral, bacterial, prion, and related infections. In carrying out its mission, DHCPP: (1) Conducts surveillance, investigations, and studies of viral and bacterial diseases, including bioterrorism agents, as well as of transmissible spongiform encephalopathies, or prion diseases, and severe diseases of unknown, but suspected infectious etiology, to define their etiology and epidemiology, and to develop effective methods for diagnosis, treatment, control, and prevention; (2) conducts or participates in clinical, field, and laboratory research to develop, evaluate, and improve laboratory methods, materials, and therapeutic practices used for diagnosis, treatment, control, and prevention of viral, bacterial, and prion diseases, including bioterrorism agents; (3) conducts research on virus and bacterial transmission to develop effective control and prevention strategies and on vaccine effectiveness to assess prevention potential; (4) conducts laboratory, clinical, and epidemiologic studies of highly hazardous disease agents that require biosafety level 3 or biosafety level 4 security for their safe handling; (5) conducts ecological studies to develop and evaluate disease control and prevention measures; (6) provides epidemic aid, epidemiologic consultation, reference and diagnostic services, and technical assistance to State and local health departments, other Federal agencies, and national and international health organizations; (7) provides scientific and technical assistance to other CDC components when the work requires unique expertise or specialized equipment not available in other components; (8) provides routine and specialized laboratory training in the diagnosis, isolation, and characterization of viral and bacterial agents to personnel from State and local health departments and other national and international organizations; (9) provides training opportunities for EIS officers and others in CDC sponsored programs, including postgraduate students, postdoctoral fellows, and other public health and laboratory scientists; (10) provides expert pathological support for various infectious diseases to other groups at CDC, State and local health departments, other Office of Infectious Diseases (OID) components, and national and international organizations; and (11) serves as appropriately designated national and WHO Collaborating Centers for viral and bacterial diseases.

Office of the Director (CVLE1). (1) Directs and manages the programs and activities of DHCPP; (2) provides leadership and guidance on policy, program planning and development, program management, and operations; (3) coordinates or assures coordination with the appropriate CDC, OID, and NCEZID offices on administrative and program matters; (4) reviews, prepares, and coordinates congressional testimony and briefing documents related to high-consequence viral, bacterial, and prion diseases, and analyzes programmatic and policy implications of legislative proposals; (5) represents CDC, OID, and NCEZID programs and prevention policies in meetings with other governmental, private, and international organizations; (6) serves as CDC, OID, and NCEZID's primary internal and external communications contact regarding high consequence viral, bacterial, and prion disease issues; and (7) advises CDC, OID, and NCEZID on policy matters concerning DHCPP programs and activities.

Prion and Public Health Office (CVLE12). (1) Serves as the lead Federal office for monitoring the occurrence of human prion disease in the U.S.; (2) conducts epidemiological investigations, studies, and multiple methods of surveillance to increase understanding of human prion diseases and selected diseases of unknown etiology (e.g., Kawasaki syndrome) for the purpose of informing disease control policies; (3) facilitates the study of brain autopsies by skilled pathologists of clinically diagnosed and suspected cases of human prion disease in the U.S. to enable early recognition of the emergence of any new prion disease (e.g., variant Creutzfeldt-Jacob Disease and possibly human chronic wasting disease); (4) provides prion disease consultations to clinicians, State and local health departments, other Federal agencies, and national and international organizations, including epidemic aid support as needed; (5) disseminates information and advice to the public on preventing or reducing the negative public impacts of prion diseases and selected diseases of unknown etiology; (6) serves as a DHCPP statistical analysis unit, collaborating with and supporting studies, investigations, and surveillance activities of epidemiologists and laboratory researchers; (7) provides statistical consultations and collaborates with researchers on local, national, and international public health morbidity and mortality studies that require expertise in manipulating and understanding large public health datasets; and (8) provides statistical and epidemiologic training opportunities for EIS officers and other personnel in CDC sponsored programs.

One Health Office (CVLE13). (1) Serves as the agency focal point and provides the programmatic home for activities on One Health, an integrated approach to optimizing human and animal health that considers the interrelatedness among humans, animals, and their environments; (2) builds and organizes a portfolio of One Health activities, plans, and accomplishments and leads the efforts to promote and accomplish the activities through NCEZID and CDC programs and partnerships; (3) builds partnerships and facilitates collaboration both within and external to CDC; (4) manages and allocates NCEZID extra-budgetary resources from the Department of State/USAID, the Department of Defense/BTEP, the National Center for Environmental Health/Climate Change, and others, as appropriate; and (5) facilitates the exchange of information and enhances communication across disciplines by sponsoring visiting scientists and fellows, lectures, and meetings.

Division of Preparedness and Emerging Infections (CVLG). The Division of Preparedness and Emerging Infections (DPEI) works to build and strengthen public health capacity by enhancing the ability of CDC and its public health partners to prepare for, prevent, and respond to infectious diseases, including outbreaks, bioterrorism, and other public health emergencies, through cross-cutting and specialized programs, technical expertise, and public health leadership. In carrying out these activities, the DPEI: (1) Advocates for CDC programs, health departments, and other partners on issues related to emerging infections, bioterrorism, and public health resources; (2) develops and implements infectious disease surveillance, laboratory, and capacity building activities in collaboration with other CDC programs and external partners; (3) works with infectious disease programs on processes for developing, awarding, managing, and evaluating infectious disease grants and cooperative agreements; (4) provides scientific and programmatic leadership, as well as management, administrative, and technical support for broad infectious disease cooperative agreements such as the Emerging Infections Program (EIPs) and the Epidemiology and Laboratory Capacity for Infectious Diseases (ELC) program; (5) collaborates across CDC and with national and international partners to address the scientific and response planning and preparedness issues for bioterrorism, emerging infections, and other infectious

disease emergencies; (6) provides the agency's initial rapid response capabilities (including 24 hour on-call emergency response coordination and epidemiologic and laboratory support) for bioterrorism and other infectious disease public health emergencies; (7) conducts, supports, and evaluates activities aimed at identifying and reducing risk factors for infectious diseases among residents of the Arctic and Subarctic regions; (8) maintains primary responsibility for development and management of the nation's Laboratory Response Network (LRN), including supporting the development, deployment, and quality control of diagnostic reagents for the LRN laboratories; (9) defines and promotes good laboratory practice standards, including providing consultation and training and improving communication and collaborations among public and private sector laboratories nationally and internationally; (10) serves as a primary screening laboratory for CDC for specimens that may contain threat agents; (11) analyzes the economic impact of infectious diseases in collaboration with other CDC infectious disease programs and collaborators outside the agency; (12) leads and coordinates infectious disease fellowships and training programs; (13) provides technical assistance and training on biosafety/biosecurity and bioterrorism agent detection and response to internal and external partners, including assistance with related public health and law enforcement investigations and planning for high profile national and international events; and (14) assists in medical countermeasures response and utilization coordination.

Office of the Director (CVLG1). (1) Manages, directs, and coordinates the activities of DPEI; (2) provides leadership and guidance on division policy, program planning, program management, and operations; (3) provides division-wide administrative and program services and ensures coordination with the appropriate CIO or staff offices on administrative and program matters; (4) provides liaison with other governmental agencies, international organizations, academic institutions and other outside groups; (5) ensures coordination of cross-cutting division activities with appropriate NCEZID divisions, the Office of Public Health Preparedness and Response, the Office of Surveillance, Epidemiology, and Laboratory Services (OSELS), and other CDC CIOs and offices; and (6) advises the NCEZID Director, the Deputy Director for Infectious Diseases, and leadership in other CDC units on division policy matters.

Division of Scientific Resources (CVLH). The Division of Scientific Resources (DSR) provides products, services, and specialized expertise to CDC staff and activities in support of research and service activities. In carrying out its mission, DSR: (1) Provides animals, laboratory supplies, animal and human blood products, glassware, mammalian tissue cultures, microbiological media, special reagents, and other laboratory materials in support of research and service activities to laboratories and investigators at CDC; (2) develops and implements applied research programs to expand and enhance the use of animal models necessary to support research and diagnostic programs and to improve breeding and husbandry procedures; (3) conducts applied research in cell biology and in the expansion of tissue culture technology as a research and diagnostic tool for infectious disease activities; (4) provides services for laboratory investigators in protein and DNA synthesis and sequencing, genomic sequencing, microarrays, proteomics, and molecular modeling; (5) maintains a bank of serum and other biological specimens of epidemiological and special significance to CDC's research and diagnostic activities; (6) obtains and distributes experimental and orphaned vaccines, drugs, antisera, antitoxins, and immune globulins; (7) manages and distributes the inventory, maintains the computerized system database, and provides general technical service support for the dispensing, lyophilizing, capping, and labeling of CDC reference reagents; (8) receives, triages, processes, and distributes specimens to CDC laboratories for reference diagnostic testing, research studies, and epidemics and reports diagnostic test results to submitting organizations; (9) manages all CDC exports and ensures compliance with regulations and serves as CDC liaison with Department of Commerce for export related issues; (10) produces and distributes specialized reagents and kits for the detection of select agents to members of the LRN; (11) provides services and expertise in development of quality systems to support compliance with the Food and Drug Administration regulations on production, distribution, and use of laboratory diagnostic reagents; (12) provides liaison activities, resources, and expertise for inquiries related to animals and zoonotic diseases; and (13) provides a centralized activity for tracking requests for and distributing select agents to investigators outside of CDC in compliance with Federal regulations.

Office of the Director (CVLH1). (1) Manages, directs, and coordinates the activities of DSR; (2) provides leadership and guidance on policy, budget, program planning and development, program management, and operations; (3) provides DSR wide administrative and program services and coordinates or ensures coordination with the appropriate CIOs OID, and CDC staff offices on administrative and program matters; (4) provides liaison with other governmental agencies, international organizations, and other outside groups; (5) coordinates, in collaboration with the appropriate CIOs, OID, and CDC components, laboratory activities relating to support of outbreak investigations or laboratory-based research including but not limited to specimen management, biological reagents, and laboratory supplies; (6) maintains a formulary of investigational and licensed drugs and biologicals that are distributed to approved physicians for the prevention, control, and/or treatment of rare, tropical, or exceptional diseases; (7) collaborates with CDC and external partners on research related to STD transmitted infections as chronic infectious diseases; and (8) advises the Director, NCEZID, on policy matters concerning DSR activities.

Division of Vector-Borne Diseases (CVLJ). (1) Conducts surveillance, investigations, and studies of vector-borne viral, rickettsial, and bacterial diseases to define disease etiology and to develop effective methods and strategies for diagnosis, prevention, and control; (2) conducts investigations on the biology, ecology, and control of arthropod vectors of viral, rickettsial, and bacterial diseases as a basis for development of new and/or modification of existing measures for more effective prevention and control; (3) conducts or participates in clinical, field, and laboratory studies to develop, evaluate, and improve laboratory methods, materials, and therapeutic practices used for diagnosis, prevention, and treatment of vector-borne infectious diseases; (4) provides epidemic aid and epidemiologic consultation, upon request, to State and local health departments, other Federal agencies, and national and international health organizations; (5) provides reference/diagnostic services for vector-borne viral, rickettsial, and bacterial diseases to State and local health departments, other Federal agencies, and national and international health organizations; (6) conducts research and collaborates on development and evaluation of vaccines; (7) provides scientific and technical assistance to other CDC components when the work requires unique expertise or specialized equipment not available in other components; (8) provides intramural and extramural technical expertise and assistance in professional training activities; and (9) serves as designated national and international reference centers for vector-borne viral, rickettsial, and bacterial diseases.

Office of the Director (CVLJ1). (1) Directs and manages the programs and activities of the Division of Vector-Borne Diseases (DVBD); (2) provides leadership and guidance on policy, program planning and development, program management, and operations; (3) coordinates or assures coordination with the appropriate CDC, OID, and NCEZID offices on administrative and program matters; (4) reviews, prepares, and coordinates congressional testimony and briefing documents related to vector-borne infectious diseases, and analyzes programmatic and policy implications of legislative proposals; (5) represents CDC and NCEZID in meetings with other governmental, private, and international organizations; (6) serves as CDC and NCEZID's primary internal and external communications contact regarding vector-borne infectious disease issues; and (7) advises CDC and NCEZID on policy matters concerning DVBD programs and activities.

Dated: July 9, 2010.

William P. Nichols,

Chief Operating Officer, Centers for Disease Control and Prevention.

[FR Doc. 2010–17794 Filed 7–22–10; 8:45 am]

BILLING CODE 4160–18–M

DEPARTMENT OF HOUSING AND URBAN DEVELOPMENT

[Docket No. FR–5375–N–28]

Federal Property Suitable as Facilities To Assist the Homeless

AGENCY: Office of the Assistant Secretary for Community Planning and Development, HUD.

ACTION: Notice.

SUMMARY: This Notice identifies unutilized, underutilized, excess, and surplus Federal property reviewed by HUD for suitability for possible use to assist the homeless.

FOR FURTHER INFORMATION CONTACT: Kathy Ezzell, Department of Housing and Urban Development, 451 Seventh Street, SW., Room 7266, Washington, DC 20410; telephone (202) 708–1234; TTY number for the hearing- and speech-impaired (202) 708–2565 (these telephone numbers are not toll-free), or call the toll-free Title V information line at 800–927–7588.

SUPPLEMENTARY INFORMATION: In accordance with 24 CFR part 581 and section 501 of the Stewart B. McKinney Homeless Assistance Act (42 U.S.C. 11411), as amended, HUD is publishing this Notice to identify Federal buildings and other real property that HUD has reviewed for suitability for use to assist the homeless. The properties were reviewed using information provided to HUD by Federal landholding agencies regarding unutilized and underutilized buildings and real property controlled by such agencies or by GSA regarding its inventory of excess or surplus Federal property. This Notice is also published in order to comply with the December 12, 1988 Court Order in *National Coalition for the Homeless* v. *Veterans Administration,* No. 88–2503–OG (D.D.C.).

Properties reviewed are listed in this Notice according to the following categories: Suitable/available, suitable/unavailable, suitable/to be excess, and unsuitable. The properties listed in the three suitable categories have been reviewed by the landholding agencies, and each agency has transmitted to HUD: (1) Its intention to make the property available for use to assist the homeless, (2) its intention to declare the property excess to the agency's needs, or (3) a statement of the reasons that the property cannot be declared excess or made available for use as facilities to assist the homeless.

Properties listed as suitable/available will be available exclusively for homeless use for a period of 60 days from the date of this Notice. Where property is described as for "off-site use only" recipients of the property will be required to relocate the building to their own site at their own expense. Homeless assistance providers interested in any such property should send a written expression of interest to HHS, addressed to Theresa Rita, Division of Property Management, Program Support Center, HHS, room 5B–17, 5600 Fishers Lane, Rockville, MD 20857; (301) 443–2265. (This is not a toll-free number.) HHS will mail to the interested provider an application packet, which will include instructions for completing the application. In order to maximize the opportunity to utilize a suitable property, providers should submit their written expressions of interest as soon as possible. For complete details concerning the processing of applications, the reader is encouraged to refer to the interim rule governing this program, 24 CFR part 581.

For properties listed as suitable/to be excess, that property may, if subsequently accepted as excess by GSA, be made available for use by the homeless in accordance with applicable law, subject to screening for other Federal use. At the appropriate time, HUD will publish the property in a Notice showing it as either suitable/available or suitable/unavailable.

For properties listed as suitable/unavailable, the landholding agency has decided that the property cannot be declared excess or made available for use to assist the homeless, and the property will not be available.

Properties listed as unsuitable will not be made available for any other purpose for 20 days from the date of this Notice. Homeless assistance providers interested in a review by HUD of the determination of unsuitability should call the toll free information line at 1–800–927–7588 for detailed instructions or write a letter to Mark Johnston at the address listed at the beginning of this Notice. Included in the request for review should be the property address (including zip code), the date of publication in the **Federal Register**, the landholding agency, and the property number.

For more information regarding particular properties identified in this Notice (*i.e.,* acreage, floor plan, existing sanitary facilities, exact street address), providers should contact the appropriate landholding agencies at the following addresses: *Army:* Ms. Veronica Rines, Department of the Army, Office of the Assistant Chief of Staff for Installation Management, DAIM–ZS, Room 8536, 2511 Jefferson Davis Hwy, Arlington, VA 22202; (703) 601–2545; *COE:* Mr. Scott Whiteford, Army Corps of Engineers, Real Estate, CEMP–CR, 441 G Street, NW., Washington, DC 20314; (202) 761–5542; *Coast Guard:* Commandant, United States Coast Guard, Attn: Jennifer Stomber, 2100 Second St., SW., Stop 7901, Washington, DC 20593–0001; (202) 475–5609; *Energy:* Mr. Mark Price, Department of Energy, Office of Engineering & Construction Management, MA–50, 1000 Independence Ave., SW., Washington, DC 20585; (202) 586–5422; *GSA:* Mr. Gordon Creed, Acting Deputy Assistant Commissioner, General Services Administration, Office of Property Disposal, 18th & F Streets, NW., Washington, DC 20405; (202) 501–0084; *Navy:* Mr. Albert Johnson, Department of the Navy, Asset Management Division, Naval Facilities Engineering Command, Washington Navy Yard, 1330 Patterson Ave., SW., Suite 1000, Washington, DC 20374; (202) 685–9305; (These are not toll-free numbers).

Dated: July 15, 2010.

Mark R. Johnston,

Deputy Assistant Secretary for Special Needs.

Title V, Federal Surplus Property Program Federal Register Report for 07/23/2010

UNSUITABLE PROPERTIES

BUILDING

Arkansas

Property 44333, 64120, 44653
Little Rock District
DeQueen AR 71832
Landholding Agency: COE
Property Number: 31201020009
Status: Excess
Reasons: Extensive deterioration

California

Bldgs. 440, 441, 442
Coast Guard Training Center
Petaluma CA 94952
Landholding Agency: Coast Guard
Property Number: 88201030001
Status: Excess
Reasons: Secured Area

Delaware

J. Allen Frear Federal Bldg.
300 South New Street
Dover DE 19904
Landholding Agency: GSA
Property Number: 54201030005
Status: Excess
GSA Number: 4–G–DE–0470
Reasons: Within 2,000 ft. of flammable or explosive material

Georgia

HAR–16465, 16179
Hartwell Lake & Dam
Hartwell GA 30643
Landholding Agency: COE
Property Number: 31201020010
Status: Unutilized
Reasons: Extensive deterioration

RBR–16227, RBR–18650

Richard B. Russell Lake & Dam
Elberton GA 30635
Landholding Agency: COE
Property Number: 31201020011
Status: Unutilized
Reasons: Extensive deterioration

New Mexico

10 Bldgs.
Los Alamos National Lab
Los Alamos NM 87545
Landholding Agency: Energy
Property Number: 41201020015
Status: Unutilized
Directions: 22–0007, 22–0009, 22–0010, 22–0011, 22–0012, 22–0014, 22–0015, 22–0016, 22–0017, 22–0019
Reasons: Secured Area

7 Bldgs.
Los Alamos National Lab
Los Alamos NM 87545
Landholding Agency: Energy
Property Number: 41201020016
Status: Unutilized
Directions: 22–0021, 22–0022, 22–0023, 22–0024, 22–0032, 22–0035, 22–0069
Reasons: Secured Area

Oklahoma

31 Bldgs.
Eufaula Lake
Stigler OK 74462
Landholding Agency: COE
Property Number: 31201020012
Status: Unutilized
Reasons: Extensive deterioration

Virginia

Bldgs. S0001, S0002
Defense Supply Center
Richmond VA
Landholding Agency: Army
Property Number: 21201020035
Status: Unutilized
Reasons: Secured Area

9 Bldgs.
Defense Supply Center
Richmond VA
Landholding Agency: Army
Property Number: 21201020036
Status: Unutilized
Directions: 61, 62, 63, 64, 67, 77, 78, 94, 95
Reasons: Secured Area

JHK–18213
John H. Kerr Lake & Dam
Mecklenburg VA 23917
Landholding Agency: COE
Property Number: 31201020013
Status: Unutilized
Reasons: Extensive deterioration

Washington

Bldg. 312
Naval Air Station
Oak Harbor WA 98278
Landholding Agency: Navy
Property Number: 77201030001
Status: Excess
Reasons: Extensive deterioration

Land

Washington

900 sq. ft. land
Naval Base
Bremerton WA
Landholding Agency: Navy
Property Number: 77201020023
Status: Underutilized
Reasons: Secured Area

[FR Doc. 2010–17727 Filed 7–22–10; 8:45 am]

BILLING CODE 4210–67–P

DEPARTMENT OF HOUSING AND URBAN DEVELOPMENT

[Docket No. FR–5415–N–10]

Notice of Availability: Notice of Funding Availability (NOFA) for Fiscal Year (FY) 2010 Doctoral Dissertation Research Grant Program

AGENCY: Office of the Assistant Secretary for Policy Development and Research, HUD.

ACTION: Notice.

SUMMARY: HUD announces the availability on its Web site of the application information, submission deadlines, funding criteria, and other requirements for the FY2010 Doctoral Dissertation Research Grant NOFA. Approximately $400,000 is made available through this NOFA, by the Consolidated Appropriations Act, 2010 (Pub. L. 111–117, approved December 16, 2009), to enable doctoral candidates enrolled at institutions of higher education accredited by a national or regional accrediting agency recognized by the U. S. Department of Education to complete their dissertations on policy-relevant housing and urban development issues. The notice providing information regarding the application process, funding criteria and eligibility requirements can be found using the Department of Housing and Urban Development agency link on the Grants.gov/Find Web site at *http://www.grants.gov/search/agency.do*. A link to Grants.gov is also available on the HUD Web site at *http://www.hud.gov/offices/adm/grants/fundsavail.cfm*. The Catalogue of Federal Domestic Assistance (CFDA) number for the Doctoral Dissertation Research Grant Program is 14.516. Applications must be submitted electronically through Grants.gov.

FOR FURTHER INFORMATION CONTACT: For information concerning the Doctoral Dissertation Research Grant program, contact Susan Brunson, Office of University Partnerships, Office of Policy Development and Research, Department of Housing and Urban Development, 451 Seventh Street, SW., Room 8226, Washington, DC 20410; telephone 202–402–3852 (this is not a toll-free number). Persons with speech or hearing impairments may access this telephone number via TTY by calling the toll-free Federal Information Relay Service during working hours at 800–877–8339.

Dated: July 15, 2010.

Raphael W. Bostic,

Assistant Secretary for Policy Development and Research.

[FR Doc. 2010–18027 Filed 7–22–10; 8:45 am]

BILLING CODE 4210–67–P

DEPARTMENT OF HOUSING AND URBAN DEVELOPMENT

[Docket No. FR–5415–N–03]

Notice of Availability: Notice of Funding Availability (NOFA) for Fiscal Year (FY) 2010 Hispanic-Serving Institutions Assisting Communities (HSIAC) Program

AGENCY: Office of the Assistant Secretary for Policy Development and Research, HUD.

ACTION: Notice.

SUMMARY: HUD announces the availability on its Web site of the application information, submission deadlines, funding criteria, and other requirements for the FY2010 Hispanic-Serving Institutions Assisting Communities (HSIAC) Program NOFA. Approximately $6.5 million is made available through this NOFA, by the Consolidated Appropriations Act, 2010 (Pub. L. 111–117, approved December 16, 2009), to assist Hispanic-Serving Institutions (HSI) expand their role and effectiveness in addressing community development needs in their localities, including neighborhood revitalization, housing, and economic development, principally for persons of low- and moderate-income, consistent with the purposes of Title I of the Housing and Community Development Act of 1974 (42 U.S.C. 5301 *et seq.*) as amended. The notice providing information regarding the application process, funding criteria and eligibility requirements can be found using the Department of Housing and Urban Development agency link on the Grants.gov/Find Web site at *http://www.grants.gov/search/agency.do*. A link to Grants.gov is also available on the HUD Web site at *http://www.hud.gov/offices/adm/grants/fundsavail.cfm*. The Catalogue of Federal Domestic Assistance (CFDA) number for the Hispanic-Serving Institutions Assisting Communities (HSIAC) Program is 14.514. Applications must be submitted electronically through Grants.gov.

FOR FURTHER INFORMATION CONTACT: For information concerning the Hispanic-Serving Institutions Assisting Communities (HSIAC) Program, contact Susan Brunson, Office of University

Partnerships, Office of Policy Development and Research, Department of Housing and Urban Development, 451 Seventh Street, SW., Room 8226, Washington DC 20410; telephone 202–402–3852 (this is not a toll-free number). Persons with speech or hearing impairments may access this telephone number via TTY by calling the toll-free Federal Information Relay Service during working hours at 800–877–8339.

Dated: July 15, 2010.

Raphael W. Bostic,

Assistant Secretary for Policy Development and Research.

[FR Doc. 2010–18028 Filed 7–22–10; 8:45 am]

BILLING CODE 4210–67–P

DEPARTMENT OF HOUSING AND URBAN DEVELOPMENT

[Docket No. FR–5415–N–06]

Notice of Availability: Notice of Funding Availability (NOFA) for Fiscal Year (FY) 2010 Tribal Colleges and Universities Program

AGENCY: Office of the Assistant Secretary for Policy Development and Research, HUD.

ACTION: Notice.

SUMMARY: Through this notice, HUD announces the availability on its website of the application information, submission deadlines, funding criteria, and other requirements for the FY2010 Tribal Colleges and Universities Program NOFA. This NOFA makes approximately $6.3 million available to assist Tribal Colleges and Universities (TCU) to build, expand, renovate, and equip their own facilities, and to expand the role of the TCUs into the community through the provision of needed services such as health programs, job training, and economic development activities. The notice providing information regarding the application process, funding criteria and eligibility requirements can be found using the Department of Housing and Urban Development agency link on the Grants.gov/Find Web site at *http://www.grants.gov/search/agency.do* and the HUD Web site at *http://www.hud.gov/offices/adm/grants/fundsavail.cfm.* A link to Grants.gov is also available on the HUD Web site.

The Catalogue of Federal Domestic Assistance (CFDA) number for the Tribal Colleges and Universities Program NOFA Program is 14.519. Applications must be submitted electronically through Grants.gov.

FOR FURTHER INFORMATION CONTACT: For information concerning the Tribal Colleges and Universities Program, contact Sherone Ivey, Office of University Partnerships, Office of Policy Development and Research, Department of Housing and Urban Development, 451 Seventh Street, SW., Room 8226, Washington, DC 20410; telephone 202–402–4200 (this is not a toll-free number). Persons with speech or hearing impairments may access this telephone number via TTY by calling the toll-free Federal Information Relay Service during working hours at 800–877–8339.

Dated: July 15, 2010.

Raphael W. Bostic,

Assistant Secretary for Policy Development and Research.

[FR Doc. 2010–18030 Filed 7–22–10; 8:45 am]

BILLING CODE 4210–67–P

DEPARTMENT OF HOUSING AND URBAN DEVELOPMENT

[Docket No. FR–5415–N–05]

Notice of Availability: Notice of Funding Availability (NOFA) for Fiscal Year (FY) 2010 the Alaska Native/Native Hawaiian Institutions Assisting Communities (AN/NHIAC) Program

AGENCY: Office of the Assistant Secretary for Policy Development and Research, HUD.

ACTION: Notice.

SUMMARY: Through this notice, HUD announces the availability on its website of the application information, submission deadlines, funding criteria, and other requirements for the FY2010 Alaska Native/Native Hawaiian Institutions Assisting Communities (AN/NHIAC) Program NOFA. This NOFA makes approximately $3.2 million available to assist Alaska Native/Native Hawaiian Institutions (AN/NHI) of Higher Education expand their role and effectiveness in addressing community development needs in their localities, including neighborhood revitalization, housing, and economic development, principally for persons of low- and moderate-income, consistent with the purposes of Title I of the Housing and Community Development Act of 1974 (42 U.S.C. 5301 *et seq.*) as amended. The notice providing information regarding the application process, funding criteria and eligibility requirements can be found using the Department of Housing and Urban Development agency link on the Grants.gov/Find Web site at *http://www.grants.gov/search/agency.do* and at HUD's Web site at *http://www.hud.gov/offices/adm/grants/fundsavail.cfm.*

The Catalogue of Federal Domestic Assistance (CFDA) number for the Alaska Native/Native Hawaiian Institutions Assisting Communities (AN/NHIAC) Program is 14.515. Applications must be submitted electronically through Grants.gov.

FOR FURTHER INFORMATION CONTACT: For information concerning the Alaska Native/Native Hawaiian Institutions Assisting Communities (AN/NHIAC) Program, contact Sherone Ivey, Office of University Partnerships, Office of Policy Development and Research, Department of Housing and Urban Development, 451 Seventh Street, SW., Room 8226, Washington DC 20410; telephone 202–402–4200 (this is not a toll-free number). Persons with speech or hearing impairments may access this telephone number via TTY by calling the toll-free Federal Information Relay Service during working hours at 800–877–8339.

Dated: *July 15, 2010.*

Raphael W. Bostic,

Assistant Secretary for Policy Development and Research.

[FR Doc. 2010–18029 Filed 7–22–10; 8:45 am]

BILLING CODE 4210–67–P

DEPARTMENT OF HOUSING AND URBAN DEVELOPMENT

[Docket No. FR–5415–N–04]

Notice of Availability: Notice of Funding Availability (NOFA) for Fiscal Year (FY) 2010 the Historically Black Colleges and Universities (HBCU) Program

AGENCY: Office of the Assistant Secretary for Policy Development and Research, HUD.

ACTION: Notice.

SUMMARY: Through this notice, HUD announces the availability on its Web site of the application information, submission deadlines, funding criteria, and other requirements for the FY2010 Historically Black Colleges and Universities (HBCU) Program NOFA. This NOFA makes approximately $9.7 million available to assist Historically Black Colleges and Universities (HBCU) of Higher Education expand their role and effectiveness in addressing community development needs in their localities, including neighborhood revitalization, housing, and economic development, principally for persons of low- and moderate-income, consistent with the purposes of Title I of the Housing and Community Development

Act of 1974 (42 U.S.C. 5301 *et seq.*) as amended. The notice providing information regarding the application process, funding criteria and eligibility requirements can be found using the Department of Housing and Urban Development agency link on the Grants.gov/Find Web site at *http://www.grants.gov/search/agency.do.*

A link to Grants.gov is also available on the HUD Web site at *http://www.hud.gov/offices/adm/grants/fundsavail.cfm.* The Catalogue of Federal Domestic Assistance (CFDA) number for the Historically Black Colleges and Universities (HBCU) Program is 14.520. Applications must be submitted electronically through Grants.gov.

FOR FURTHER INFORMATION CONTACT: For information concerning the Historically Black Colleges and Universities (HBCU) Program, please contact Susan Brunson, Office of University Partnerships, Office of Policy Development and Research, Department of Housing and Urban Development, 451 Seventh Street, SW., Room 8226, Washington DC 20410; telephone 202–402–3852 (this is not a toll-free number). Persons with speech or hearing impairments may access this telephone number via TTY by calling the toll-free Federal Information Relay Service during working hours at 800–877–8339.

Dated: July 15, 2010.

Raphael W. Bostic,

Assistant Secretary for Policy Development and Research.

[FR Doc. 2010–18125 Filed 7–22–10; 8:45 am]

BILLING CODE 4210–67–P

DEPARTMENT OF HOUSING AND URBAN DEVELOPMENT

[Docket No. FR–5428–N–01]

Public Housing Assessment System (PHAS): Asset Management Transition Year 2 Extension

AGENCY: Office of the Assistant Secretary for Public and Indian Housing, HUD.

ACTION: Notice.

SUMMARY: This notice provides information regarding scoring and submission requirements for public housing agencies (PHAs) under the Public Housing Assessment System (PHAS). This notice extends the **Federal Register** notice, Public Housing Assessment System (PHAS): Asset Management Transition Year 2 Information (75 FR 1632), dated January 12, 2010, for PHAs with fiscal years ending (FYEs) June 30, 2010, and September 30, 2010.

FOR FURTHER INFORMATION CONTACT: The Office of Public and Indian Housing, Real Estate Assessment Center (REAC), Attention: Cheryl Teninga, Department of Housing and Urban Development, 550 12th Street, SW., Suite 100, Washington, DC 20410; telephone number (REAC Technical Assistance Center) 888–245–4860 (this is a toll-free number). Persons with hearing or speech impairments may access this number through TTY by calling the toll-free Federal Information Relay Service at 800–877–8339.

SUPPLEMENTARY INFORMATION:

I. Background

A. PHAS Scoring During Transition Year 1

On August 21, 2008, HUD published **Federal Register** notice (FR–5227–N–01), "Public Housing Assessment System (PHAS): Asset Management Transition Year Information and Uniform Financial Reporting Standards (UFRS) Information" (73 FR 49588). In that notice, HUD indicated that, for PHAs with FYEs of June 30, 2008, through March 31, 2009, HUD would not issue a new overall PHAS score. Further, PHAs were not required to submit their management operations information and were not subject to resident satisfaction surveys (other than PHAs with a FYE of June 30, 2008, for whom the survey results were informational only). PHAs were still required to submit their annual financial statements (not scored) and were subject to the same inspection frequencies, the scores from which were also for informational purposes only.

B. PHAS Scoring During Transition Year 2

The Transition Year 2 notice (75 FR 1632, January 12, 2010) covers those PHAs with FYEs of June 30, 2009, September 30, 2009, December 31, 2009, and March 31, 2010. This notice also applies to Moving-to-Work PHAs that are not specifically exempted from a PHAS assessment in their grant agreements.

Small PHAs (those with fewer than 250 public housing units): Under the current PHAS rule, small PHAs are generally assessed every other year. During Transition Year 2, small PHAs are being assessed pursuant to 24 CFR 902.9.

Instructions for submissions and scoring were provided for the physical condition, financial condition, management operations, and resident assessment indicators.

C. Transition Year 2 Extension

This notice provides for an extension of the Transition Year 2 notice for PHAs with FYEs of June 30, 2010, and September 30, 2010. In addition to the information provided in the Transition Year 2 notice, the following applies to this extension notice.

Management Operations Indicator. PHAs will be required to submit their management operations certification, pursuant to 24 CFR part 902, subpart D. Small PHAs will be assessed pursuant to 24 CFR 902.9.

PHAs with FYEs of June 30, 2009, and September 30, 2009, that requested and received an approved waiver for their management operations certification may request an extension of that waiver for FYEs June 30, 2010, and September 30, 2010. HUD will notify those PHAs in writing of the waiver extension.

PHAs with FYEs of June 30, 2010, and September 30, 2010, that did not submit a waiver request for their previous FYE and are converting to asset management, and for which the submission of the current management operations certification would impose an administrative hardship, may request a waiver for their management operations certification pursuant to 24 CFR 5.110, within 30 days from the date of this notice.

Resident Assessment Indicator. HUD will not administer the resident service and satisfaction survey for PHAs with FYEs of June 30, 2010, and September 30, 2010. Such PHAs have the same choices stated in the Transition Year 2 notice.

PHAs with FYEs of June 30, 2009, and September 30, 2009, that requested and were granted an appeal for the resident assessment indicator may request an extension of the results of that appeal. HUD will notify those PHAs in writing of the extension of the results of the appeal.

All other aspects of the current PHAS rule will remain in effect during the Transition Year 2 Extension period.

II. Environmental Review

This notice provides operating instructions and procedures in connection with activities under a **Federal Register** document that has previously been subject to a required environmental review. Accordingly, under 24 CFR 50.19(c)(4), this notice is categorically excluded from environmental review under the National Environmental Policy Act of 1969 (42 U.S.C. 4321 *et seq.*).

Dated: July 20, 2010.

Sandra B. Henriquez,

Assistant Secretary for Public and Indian Housing.

[FR Doc. 2010–18126 Filed 7–22–10; 8:45 am]

BILLING CODE 4210–67–P

DEPARTMENT OF THE INTERIOR

U.S. Geological Survey

Agency Information Collection Activities: Comment Request for the Comprehensive Test Ban Treaty (1 Form)

AGENCY: U.S. Geological Survey (USGS), Interior.

ACTION: Notice of an extension of an information collection (1028–0059).

SUMMARY: To comply with the Paperwork Reduction Act of 1995 (PRA), we are notifying the public that we have submitted to the Office of Management and Budget (OMB) an information collection request (ICR) for the extension of the currently approved paperwork requirements for the USGS *Comprehensive Test Ban Treaty (CTBT).* This collection consists of one form and this notice provides the public an opportunity to comment on the paperwork burden of this form. We may not conduct or sponsor, and a person is not required to respond to, a collection of information unless it displays a currently valid OMB control number.

DATES: You must submit comments on or before August 23, 2010.

ADDRESSES: Please submit written comments on this information collection directly to the Office of Management and Budget (OMB) Office of Information and Regulatory Affairs, Attention: Desk Officer for the Department of the Interior via e-mail to *OIRA_DOCKET@omb.eop.gov* or fax at 202–395–5806; and identify your submission as 1028–0059. Please also submit a copy of your written comments to Phadrea Ponds, USGS Information Collection Clearance Officer, 2150–C Centre Avenue, Fort Collins, CO 80526–8118 (mail); 970–226–9230 (fax); or *pondsp@usgs.gov* (e-mail). Use OMB Control Number 1028–0059 in the subject line.

FOR FURTHER INFORMATION CONTACT: Scott F. Sibley at U.S. Geological Survey, 989 National Center, 12201 Sunrise Valley Drive, Reston, VA 20192 (mail); 703–648–4976 (telephone); or *ssibley@usgs.gov* (e-mail).

SUPPLEMENTARY INFORMATION:

I. Abstract

The collection of this information is required by the CTBT, and will provide the CTBT Technical Secretariat with geographic locations of sites where chemical explosions greater than 300 tons TNT-equivalent have occurred or will occur in in the next calendar year.

II. Data

OMB Control Number: 1028–0059.

Form Number: 9–4040–A.

Title: Comprehensive Test Ban Treaty.

Type of Request: Extension of a currently approved collection.

Respondent Obligation: Voluntary.

Frequency of Collection: Annually.

Affected Public: U.S. nonfuel minerals producers.

Estimated Number of Annual Responses: 2,100.

Annual Burden Hours: 525 hours. We expect to receive 2,100 annual responses. We estimate an average of 15 minutes per response. This includes the time for reviewing instructions, gathering and maintaining data, and completing and reviewing the information.

Estimated Reporting and Recordkeeping "Non-Hour Cost" Burden: We have not identified any "non-hour cost" burdens associated with this collection of information.

III. Request for Comments

On November 9, 2009, we published a **Federal Register** notice (74 FR 57698) announcing that we would submit this ICR to OMB for approval and soliciting comments. The comment period closed on January 8, 2010. We did not receive any comments in response to that notice.

We again invite comments concerning this ICR on: (a) Whether the proposed collection of information is necessary for the agency to perform its duties, including whether the information is useful; (b) the accuracy of the agency's estimate of the burden of the proposed collection of information; (c) ways to enhance the quality, usefulness, and clarity of the information to be collected; and (d) ways to minimize the burden on the respondents, including the use of automated collection techniques or other forms of information technology.

Comments that you submit in response to this notice are a matter of public record. Before including your address, phone number, e-mail address, or other personal identifying information in your comment, you should be aware that your entire comment, including your personal identifying information, may be made publicly available at any time. While you can ask us in your comment to withhold your personal identifying information from public review, we cannot guarantee that we will be able to do so.

USGS Information Collection Clearance Officer: Phadrea Ponds 970–226–9445.

Dated: July 16, 2010.

John H. DeYoung, Jr.,

Director, National Minerals Information Center, U.S. Geological Survey.

[FR Doc. 2010–18016 Filed 7–22–10; 8:45 am]

BILLING CODE P

DEPARTMENT OF THE INTERIOR

Bureau of Land Management

[AA–6648–A, AA–6648–Q; LLAK965000–L14100000–KC0000–P]

Alaska Native Claims Selection

AGENCY: Bureau of Land Management, Interior.

ACTION: Notice of decision approving lands for conveyance.

SUMMARY: As required by 43 CFR 2650.7(d), notice is hereby given that the Bureau of Land Management (BLM) will issue an appealable decision approving the conveyance of surface estate for certain lands to Aleknagik Natives Limited, pursuant to the Alaska Native Claims Settlement Act. The subsurface estate in these lands will be conveyed to Bristol Bay Native Corporation when the surface estate is conveyed to Aleknagik Natives Limited. The lands are in the vicinity of Aleknagik, Alaska, and are located in:

Seward Meridian, Alaska

T. 10 S., R. 55 W.,
Sec. 26, 27, 34, and 35.
Containing approximately 460 acres.

Notice of the decision will also be published four times in the Bristol Bay Times.

DATES: Any party claiming a property interest in the lands affected by the decision may appeal the decision within the following time limits:

1. Unknown parties, parties unable to be located after reasonable efforts have been expended to locate, parties who fail or refuse to sign their return receipt, and parties who receive a copy of the decision by regular mail which is not certified, return receipt requested, shall have until August 23, 2010 to file an appeal.

2. Parties receiving service of the decision by certified mail shall have 30 days from the date of receipt to file an appeal.

Parties who do not file an appeal in accordance with the requirements of 43 CFR part 4, subpart E, shall be deemed to have waived their rights.

ADDRESSES: A copy of the decision may be obtained from: Bureau of Land Management, Alaska State Office, 222 West Seventh Avenue, #13, Anchorage, Alaska 99513–7504.

FOR FURTHER INFORMATION CONTACT: The BLM by phone at 907–271–5960, by e-mail at *ak.blm.conveyance@blm.gov,* or by telecommunication device (TTD) through the Federal Information Relay Service (FIRS) at 1–800–877–8339, 24 hours a day, 7 days a week.

Jason Robinson,

Land Law Examiner,

Land Transfer Adjudication II Branch.

[FR Doc. 2010–18046 Filed 7–22–10; 8:45 am]

BILLING CODE 4310–JA–P

DEPARTMENT OF THE INTERIOR

Bureau of Land Management

[F–14837–G2, F–14837–H2, F–14837–I2; LLAK964000–L14100000–KC0000–P]

Alaska Native Claims Selection

AGENCY: Bureau of Land Management, Interior.

ACTION: Notice of decision approving lands for conveyance.

SUMMARY: As required by 43 CFR 2650.7(d), notice is hereby given that the Bureau of Land Management (BLM) will issue an appealable decision approving the conveyance of surface estate for certain lands to Beaver Kwit'chin Corporation, pursuant to the Alaska Native Claims Settlement Act. The subsurface estate in these lands will be conveyed to Doyon, Limited when the surface estate is conveyed to Beaver Kwit'chin Corporation. The lands are in the vicinity of Beaver, Alaska, and are located in:

Fairbanks Meridian, Alaska

T. 16 N., R. 1 E.,
Secs. 1 to 20;
Sec. 24;
Secs. 29 to 32;
Sec. 36.

Containing approximately 13,957 acres.

T. 16 N., R. 3 E.,
Secs. 1 to 36, inclusive.

Containing approximately 20,307 acres.

T. 16 N., R. 1 W.,
Secs. 13 to 17, inclusive;
Secs. 20 to 26, inclusive.

Containing approximately 6,521 acres.
Aggregating approximately 40,784 acres.

Notice of the decision will also be published four times in the Fairbanks Daily News-Miner.

DATES: The time limits for filing an appeal are:

1. Any party claiming a property interest which is adversely affected by the decision shall have until August 23, 2010 to file an appeal.

2. Parties receiving service of the decision by certified mail shall have 30 days from the date of receipt to file an appeal.

Parties who do not file an appeal in accordance with the requirements of 43 CFR part 4, subpart E, shall be deemed to have waived their rights.

ADDRESSES: A copy of the decision may be obtained from: Bureau of Land Management, Alaska State Office, 222 West Seventh Avenue, #13, Anchorage, Alaska 99513–7504.

FOR FURTHER INFORMATION CONTACT: The BLM by phone at 907–271–5960, or by e-mail at *ak.blm.conveyance@ak.blm.gov.* Persons who use a telecommunication device (TTD) may call the Federal Information Relay Service (FIRS) at 1–800–877–8339, 24 hours a day, 7 days a week, to contact the BLM.

Jason Robinson,

Land Law Examiner, Land Transfer Adjudication II Branch.

[FR Doc. 2010–18044 Filed 7–22–10; 8:45 am]

BILLING CODE 4310–JA–P

DEPARTMENT OF THE INTERIOR

Bureau of Land Management

[LLMT–06000–01–L10200000–PG0000]

Notice of Public Meeting; Central Montana Resource Advisory Council

AGENCY: Bureau of Land Management, Interior.

ACTION: Notice of public meeting.

SUMMARY: In accordance with the Federal Land Policy and Management Act and the Federal Advisory Committee Act of 1972, the U.S. Department of the Interior, Bureau of Land Management (BLM) Central Montana Resource Advisory Council (RAC) will meet as indicated below.

DATES: The meeting will be held August 10 and 11, 2010.

The meetings will be in the Winifred Community Hall (Main Street) in Winifred, Montana.

The August 10 meeting will begin at 9 a.m. with a 30-minute public comment period and will adjourn at 5:30 p.m.

The August 11 meeting will consist of a field visit for council members on the Upper Missouri National Wild and Scenic River.

SUPPLEMENTARY INFORMATION: This 15-member council advises the Secretary of the Interior on a variety of management issues associated with public land management in Montana. During these meetings the council will participate in/discuss/act upon:

RAC comments and discussions;
District Managers' and Oil and Gas Field Office updates;
An update on the HiLine resource management planning effort;
Presentations on BLM weed management efforts;
An update concerning a sage grouse study project;
A presentation about the Undaunted Stewardship Program;
A field visit to an Undaunted Stewardship project site;
A general review and discussion among RAC members; and
Administrative details (next meeting date, location, travel vouchers, etc.).

All RAC meetings are open to the public. The public may present written comments to the RAC. Each formal RAC meeting will also have time allocated for hearing public comments. Depending on the number of persons wishing to comment and time available, the time for individual oral comments may be limited.

FOR FURTHER INFORMATION CONTACT: Gary L. "Stan" Benes, District Manager, Central Montana District Office, Lewistown, MT 59457, (406) 538–1900.

Dated: July 15, 2010.

Gary L. "Stan" Benes,

District Manager.

[FR Doc. 2010–18064 Filed 7–22–10; 8:45 am]

BILLING CODE 4310–DN–P

DEPARTMENT OF THE INTERIOR

National Park Service

Flight 93 National Memorial Advisory Commission

AGENCY: National Park Service, Interior.

ACTION: Notice of August 7, 2010, meeting.

SUMMARY: This notice sets forth the date of the August 7, 2010, meeting of the Flight 93 Advisory Commission.

DATES: The public meeting of the Advisory Commission will be held on Saturday, August 7, 2010, from 10 a.m. to 1 p.m. (Eastern). The Commission will meet jointly with the Flight 93 Memorial Task Force.

Location: The meeting will be held at the Somerset County Courthouse, Court Room #1, located at 111 E. Union Street, Somerset, PA 15501.

Agenda

The August 7, 2010, joint Commission and Task Force meeting will consist of:

1. Opening of Meeting and Pledge of Allegiance.
2. Review and Approval of Commission Minutes from May 1, 2010.
3. Reports from the Flight 93 Memorial Task Force and National Park Service.
4. Old Business.
5. New Business.
6. Public Comments.
7. Closing Remarks.

FOR FURTHER INFORMATION CONTACT: Joanne M. Hanley, Superintendent, Flight 93 National Memorial, 109 West Main Street, Somerset, PA 15501, 814.443.4557.

SUPPLEMENTARY INFORMATION: The meeting will be open to the public. Any member of the public may file with the Commission a written statement concerning agenda items. Address all statements to: Flight 93 Advisory Commission, 109 West Main Street, Somerset, PA 15501. Before including your address, phone number, e-mail address, or other personal identifying information in your comment, you should be aware that your entire comment—including your personal identifying information—may be made publicly available at any time. While you can ask us in your comment to withhold your personal identifying information from public review, we cannot guarantee that we will be able to do so.

Dated: June 24, 2010.

Joanne M. Hanley,

Superintendent, Flight 93 National Memorial.

[FR Doc. 2010–18011 Filed 7–22–10; 8:45 am]

BILLING CODE P

DEPARTMENT OF THE INTERIOR

Bureau of Land Management

[LLCOF0200–L12200000–DU0000]

Notice of Proposed Supplementary Rules for Public Lands in Colorado: Public Lands Administered by the Bureau of Land Management, Royal Gorge Field Office, Arkansas River Travel Management Area in Chaffee, Custer, and Fremont Counties, CO

AGENCY: Bureau of Land Management, Interior.

ACTION: Notice of proposed supplementary rules.

SUMMARY: The Bureau of Land Management (BLM) in Colorado is proposing supplementary rules for public lands included in the Arkansas River Travel Management Area in Chaffee, Custer, and Fremont Counties, Colorado. These rules would implement several decisions from the Arkansas River Travel Management Plan (TMP), approved May 21, 2008. The proposed supplementary rules address off-road vehicle use, mountain bike use, and recreational target shooting.

DATES: Please send comments to the following address by September 21, 2010. Comments received or postmarked after this date may not be considered in the development of the final supplementary rules.

ADDRESSES: Please mail comments to Leah Quesenberry, BLM Royal Gorge Field Office, 3028 East Main Street, Cañon City, Colorado 81212, or e-mail comments to *rgfo_comments@blm.gov* and include "Proposed Supplementary Rules" in the subject line.

FOR FURTHER INFORMATION CONTACT: Leah Quesenberry, Royal Gorge Field Office, (719) 269–8500, e-mail *leah_quesenberry@blm.gov.*

SUPPLEMENTARY INFORMATION:

I. Public Comment Procedures

You may mail or hand-deliver comments to Leah Quesenberry, BLM Royal Gorge Field Office, 3028 East Main Street, Cañon City, Colorado 81212, or e-mail comments to *rgfo_comments@blm.gov* and include "Proposed Supplementary Rules" in the subject line. Written comments on the proposed supplementary rules should be specific, be confined to issues pertinent to the proposed supplementary rules, and explain the reason for any recommended change. Where possible, comments should reference the specific section or paragraph of the rules that the comment is addressing. The BLM is not obligated to consider or include in the Administrative Record for the supplementary rules comments that the BLM receives after the close of the comment period (*see* **DATES**), unless they are postmarked or electronically dated before the deadline, or comments delivered to an address other than the address listed above (*see* **ADDRESSES**).

Comments, including names, street addresses, and other contact information of respondents, will be available for public review at the BLM Royal Gorge Field Office, 3028 East Main Street, Cañon City, Colorado 81212, during regular business hours (7:30 a.m. to 3:45 p.m., Monday through Friday, except Federal holidays). Before including your address, phone number, e-mail address, or other personal identifying information in your comment, you should be aware that your entire comment—including your personal identifying information—may be made publicly available at any time. While you can ask us in your comment to withhold your personal identifying information from public review, we cannot guarantee that we will be able to do so.

II. Background

A "Notice of Intent to Prepare the Arkansas River TMP and Amend the Royal Gorge Resource Management Plan" was published in the **Federal Register** on June 9, 2003 (68 FR 34417). The completion of the Arkansas River TMP Environmental Assessment (EA) began a 45-day public comment period on June 19, 2007. Following analysis of the public comments, a decision on the Arkansas River TMP was issued on May 21, 2008. These proposed supplementary rules would allow the BLM to increase law enforcement efforts focused on mitigating damage to natural resources and provide for public health and safety.

III. Discussion of Proposed Supplementary Rules

Under the authority of 43 U.S.C. 1733(a) and 43 CFR 8365.1–6, these proposed supplementary rules would implement certain decisions from the Arkansas River TMP that enhance public safety; protect natural and cultural resources; eliminate motorized and non-motorized impacts on sensitive species habitat; and reduce conflicts among public land users.

The Arkansas River Travel Management Area covers public lands located within Chaffee, Custer, and Fremont Counties, Colorado.

New Mexico Principal Meridian, Colorado

Tps. 49 thru 51 N., R. 8 E.
Tps. 48 thru 50 N., R. 9 E.
Tps. 47 thru 49 N., R. 10 E.
Tps. 47 thru 49 N., R. 11 E.
Tps. 47 thru 49 N., R. 12 E.

Sixth Principal Meridian, Colorado

Tps. 18 and 19 S., R. 70 W.
Tps. 18 thru 22 S., R. 71 W.
Tps. 17 thru 22 S., R. 72 W.
Tps. 17 thru 22 S., R. 73 W.

Containing 240,555 acres of public land, more or less.

IV. Procedural Matters

Executive Order 12866, Regulatory Planning and Review

These supplementary rules are not a significant regulatory action and are not subject to review by Office of Management and Budget under Executive Order 12866. These rules will not have an effect of $100 million or

more on the economy. These rules will not adversely affect in a material way the economy, productivity, competition, jobs, the environment, public health or safety, or state, local, or tribal governments or communities. These rules will not create a serious inconsistency or otherwise interfere with an action taken or planned by another agency. These rules do not materially alter the budgetary effects of entitlements, grants, user fees, or loan programs, or the rights or obligations of their recipients; nor do they raise novel legal or policy issues. These supplementary rules will not affect legal commercial activity, but merely impose limitations on certain recreational activities on certain public lands to protect natural resources and human health and safety.

Clarity of the Supplementary Rules

Executive Order 12866 requires each agency to write regulations that are simple and easy to understand. In addition to written comments requested on substantive issues pertinent to the proposed supplementary rules, we invite comments on how to make these supplementary rules easier to understand, including answers to questions such as the following:

(1) Are the requirements in the proposed supplementary rules clearly stated?

(2) Do the proposed supplementary rules contain technical language or jargon that interferes with their clarity?

(3) Does the format of the proposed supplementary rules (grouping and order of sections, use of headings, paragraphing, etc.) aid or reduce its clarity?

(4) Would the proposed supplementary rules be easier to understand if they were divided into more (but shorter) sections?

(5) Is the description of the proposed supplementary rules in the "Discussion of Proposed Supplementary Rules" section of this preamble helpful in understanding these proposed supplementary rules? How could this description be more helpful in making the proposed supplementary rules easier to understand?

Please send any comments you have on the clarity of the proposed supplementary rules to the address specified in the **ADDRESSES** section.

National Environmental Policy Act

The BLM prepared an EA (CO–200–2006–0086EA) in support of the Arkansas River TMP, including the decisions set forth in these supplementary rules and found that the plan decisions would not constitute a major Federal action significantly affecting the quality of the human environment under section 102(2)(C) of the National Environmental Policy Act, 42 U.S.C. 4332(2)(C). The BLM has placed the EA, Finding of No Significant Impact, and Decision Record on file in the BLM Administrative Record at the address specified in the **ADDRESSES** section.

Regulatory Flexibility Act

Congress enacted the Regulatory Flexibility Act of 1980 (RFA), as amended, 5 U.S.C. 601–612, to ensure that Government regulations do not unnecessarily or disproportionately burden small entities. The RFA requires a regulatory flexibility analysis if a rule would have a significant economic impact, either detrimental or beneficial, on a substantial number of small entities. These rules should have no effect on business entities of any size. These rules would merely impose reasonable restrictions on certain recreational activities on certain public lands to protect natural resources and the environment and human health and safety. Therefore, the BLM has determined under the RFA that these rules would not have a significant economic impact on a substantial number of small entities.

Small Business Regulatory Enforcement Fairness Act

These supplementary rules are not a "major rule" as defined at 5 U.S.C. 804(2). These rules would merely impose reasonable restrictions on certain recreational activities on certain public lands to protect natural resources and the environment and human health and safety. These rules would not:

(1) Have an annual effect on the economy of $100 million or more;

(2) Cause a major increase in costs or prices for consumers, individual industries, Federal, State, or local agencies, or geographic regions; or

(3) Have significant adverse effects on competition, employment, investment, productivity, innovation, or on the ability of United States-based enterprises to compete with foreign-based enterprises in domestic and export markets.

Unfunded Mandates Reform Act

These supplementary rules do not impose an unfunded mandate on State, local, or tribal governments, or the private sector of more than $100 million per year; nor do these supplementary rules have a significant or unique effect on State, local, or tribal governments or the private sector. These supplementary rules have no effect on State, local, or tribal governments and do not impose any requirements on any of these entities.

They would merely impose reasonable restrictions on certain recreational activities on certain public lands to protect natural resources and the environment and human health and safety. Therefore, the BLM is not required to prepare a statement containing the information required by the Unfunded Mandates Reform Act (2 U.S.C. 1531 *et seq.*).

Executive Order 12630, Governmental Actions and Interference With Constitutionally Protected Property Rights (Takings)

These supplementary rules do not represent a government action capable of interfering with constitutionally protected property rights. The supplementary rules do not address property rights in any form, and do not cause the impairment of one's property rights. Therefore, the BLM has determined that these rules would not cause a "taking" of private property or require further discussion of takings implications under this Executive Order.

Executive Order 13132, Federalism

The supplementary rules will not have a substantial direct effect on the states, on the relationship between the national government and the states, or on the distribution of power and responsibilities among the various levels of government. These supplementary rules do not conflict with any Colorado State law or regulation and government vehicles are expressly excluded from the effect of the vehicle restrictions. The shooting restrictions in these supplementary rules do not apply to hunting with a state hunting license. Therefore, in accordance with Executive Order 13132, the BLM has determined that these rules do not have sufficient Federalism implications to warrant preparation of a Federalism Assessment.

Executive Order 12988, Civil Justice Reform

Under Executive Order 12988, the BLM Colorado State Office has determined that these rules would not unduly burden the judicial system and that they meet the requirements of sections 3(a) and 3(b) (2) of the Order.

Executive Order 13175, Consultation and Coordination With Indian Tribal Governments

In accordance with Executive Order 13175, the BLM found that these supplementary rules do not include

policies that have tribal implications because tribal lands and resources would not be impacted by these supplementary rules. However, formal consultation with 16 tribes was completed for the Arkansas River TMP.

Information Quality Act

In developing these supplementary rules, we did not conduct or use a study, experiment or survey requiring peer review under the Information Quality Act (section 515 of Pub. L. 106–554).

Executive Order 13211, Actions Concerning Regulations That Significantly Affect Energy Supply, Distribution, or Use

These supplementary rules do not comprise a significant energy action. These rules will not have an adverse effect on energy supply, production, or consumption and have no connection with energy policy.

Executive Order 13352, Facilitation of Cooperative Conservation

In accordance with Executive Order 13352, the BLM has determined that the supplementary rules will not impede facilitating cooperative conservation; will take appropriate account of and consider the interests of persons with ownership or other legally recognized interests in land or other natural resources; properly accommodate local participation in the Federal decision-making process; and provide that the programs, projects, and activities are consistent with protecting public health and safety. These rules merely establish rules of conduct for recreational use of certain public lands.

Paperwork Reduction Act

These supplementary rules do not contain information collection requirements that the Office of Management and Budget must approve under the Paperwork Reduction Act of 1995, 44 U.S.C. 3501, *et seq.*

Author

The principal author of these proposed supplementary rules is Leah Quesenberry, Renewable Resources Staff Supervisor, BLM, Royal Gorge Field Office.

For the reasons stated in the Preamble, and under the authority of 43 U.S.C. 1733(a) and 43 CFR 8365.1–6, the BLM proposes to issue supplementary rules for the public lands within the Arkansas River TMP area, Colorado, to read as follows:

Supplementary Rules for the Arkansas River Travel Management Plan Area

1. You must not operate a motor vehicle more than 100 feet in any direction off a designated road in the Arkansas River Travel Management Plan (TMP) area.

2. You must not ride mountain bicycles other than on roads and trails designated open to mountain bicycles by a Bureau of Land Management (BLM) sign or map in the Arkansas River TMP area.

3. You must not engage in recreational target shooting on public lands in the Methodist Mountain area south of Salida (2,314 acres) and the Turkey Rock area near Howard (361 acres), which are identified as closed to recreational target shooting by a BLM sign or map.

4. You may not operate a motorized vehicle within the area known as Turkey Rock (52 acres) unless it is a motorcycle specifically designed for observed trials riding, including rear wheel drive and universal trial tires with a width that does not exceed a 4.00 inch cross-section.

Exceptions

These supplementary rules do not apply to emergency, law enforcement, and Federal or other government vehicles while being used for official or other emergency purposes, or to any other vehicle use that is expressly authorized or otherwise officially approved by the BLM. The prohibition of target shooting in Rule 3 has no effect on hunting by licensed hunters in legitimate pursuit of game during the proper season with appropriate firearms, as defined by the Colorado Division of Wildlife.

Penalties

On public lands under section 303(a) of the Federal Land Policy and Management Act of 1976 (43 U.S.C. 1733(a) and 43 CFR 8360.0–7), any person who violates any of these supplementary rules may be tried before a United States Magistrate and fined no more than $1,000 or imprisoned for no more than 12 months, or both. Such violations may also be subject to the enhanced fines provided for by 18 U.S.C. 3571.

Helen M. Hankins,

Colorado State Director.

[FR Doc. 2010–18051 Filed 7–22–10; 8:45 am]

BILLING CODE 4310–JB–P

DEPARTMENT OF THE INTERIOR

Bureau of Land Management

[CO–200–1430–FR; COC–71156]

Notice of Realty Action: Recreation and Public Purposes Act Classification, Lake County, CO

AGENCY: Bureau of Land Management, Interior.

ACTION: Notice of realty action.

SUMMARY: The Bureau of Land Management (BLM) proposes to classify approximately 26.99 acres of public land for lease and eventual conveyance under the authority of the Recreation and Public Purposes (R&PP) Act, as amended, to the 10th Mountain Division Hut Association, a not-for-profit organization. The 10th Mountain Division Hut Association intends to use the lands to site a small warehouse, administrative offices, and two units of employee housing.

DATES: Interested parties may submit written comments regarding the proposed lease/conveyance or classification to the address below on or before September 7, 2010.

ADDRESSES: Detailed information, including but not limited to, a proposed development plan and documentation relating to compliance with applicable environmental and cultural resources laws, is available for review at the BLM Royal Gorge Field Office, 3028 East Main Street, Canon City, Colorado 81212.

FOR FURTHER INFORMATION CONTACT: Jan Lownes at (719) 269–8546 or e-mail: *jlownes@co.blm.gov.*

SUPPLEMENTARY INFORMATION: The following public land parcel in Lake County, Colorado, has been examined and found suitable for classification for lease and subsequent conveyance to the 10th Mountain Division Hut Association under the provisions of the R&PP Act, as amended, and the Taylor Grazing Act, 43 U.S.C. 315(f) (classification).

Sixth Principal Meridian

T. 9 S., R. 80 W.,

Sec. 33, Proposed lot 14, (All Public lands located in N½NW¼).

The described area contains approximately 26.99 acres in Lake County.

The 10th Mountain Hut filed a petition-application under the provisions of the R&PP Act, as amended (43 U.S.C. 869 *et seq.*) for classification, lease and conveyance. The 10th Mountain Division Hut Association (10th Mountain Hut) has not applied for more than the 6,400-acre limitation for recreation uses in a year.

The 10th Mountain Hut has submitted a statement in compliance with the regulations implementing the R&PP Act, at 43 CFR 2741.4(b). The 10th Mountain Hut proposes to use the land as a base of operations to adequately maintain huts owned and operated by 10th Mountain Hut, and to continue to provide a quality public recreation experience. The 10th Mountain Hut operates a series of 14 backcountry huts in the Central Rocky Mountains for public use. Their goal is to promote understanding and appreciation of the natural mountain environment while developing individual self-reliance. The facilities would include a warehouse, small administrative office, and two units of employee housing.

The 10th Mountain Hut has not requested more land than is needed for their development and management plans.

The land is not needed for any Federal purposes and has been identified for disposal in the BLM Royal Gorge Resource Management Plan (May 13, 1996). Conveyance of the land for recreational or public purposes is consistent with current BLM land use planning, is in the public interest, and would complement the 10th Mountain Hut's outdoor recreation program.

All interested parties will receive a copy of this notice once it is published in the **Federal Register**. The notice will be published in a newspaper of local circulation for 3 consecutive weeks. The regulations do not require a public meeting.

Upon publication of this notice in the **Federal Register**, the parcel will be segregated from all other forms of appropriation under the public land laws, including the general mining laws, except for conveyance under the R&PP Act and leasing under the mineral leasing laws.

The R&PP lease and subsequent patent, if issued, will be subject to the following terms, conditions and reservations:

1. A reservation to the United States for ditches and canals constructed by the authority of the United States under the Act of August 30, 1890 (43 U.S.C. 945).

2. Provisions of the Recreation and Public Purposes Act and to all applicable regulations of the Secretary of the Interior.

3. All mineral deposits in the parcel shall be reserved to the United States together with the right to prospect for, mine and remove the minerals, according to any regulations as the Secretary may prescribe, along with all necessary access and exit rights.

4. All valid existing rights documented on the official public land records at the time of patent issuance.

5. Indemnification Term: The lessee/patentee, by accepting the lease/patent, covenants and agrees to indemnify, defend, and hold the United States harmless from any costs, damages, claims, causes of action, penalties, fines, liabilities, and judgments of any kind arising from the past, present, or future acts or omissions of the lessee/patentee, its employees, agents, contractor, or lessees, or any third party, arising out of, or in connection with, the lessee's/patentee's use, occupancy or operations on the leased/patented real property. This indemnification and hold harmless agreement includes, but is not limited to, acts and omissions of the lessee/patentee and its employees, agents, contractors or lessees, or any third party, arising out of or in connection with the use and/or occupancy of the leased/patented real property that has already resulted or does hereafter result in: (1) Violations of Federal, state and local laws and regulations that are now, or may in the future, become applicable to the real property; (2) Judgments, claims, or demands of any kind assessed against the United States; (3) Costs, expenses, or damages of any kind incurred by the United States; (4) Releases or threatened releases of solid or hazardous waste(s) and/or hazardous substance(s) as defined by Federal or state environmental laws, off, on, into, or under land, property, and other interests of the United States; (5) Activities by which solid or hazardous substances or wastes, as defined by Federal and state environmental laws are generated, released, stored, used, or otherwise disposed of on the leased/patented real property, and any cleanup response, remedial action, or other actions related in any manner to said solid or hazardous substance(s) or waste(s); or (6) natural resource damages as defined by Federal and state law. If and when the land is patented, this covenant shall be construed as running with the patented real property and may be enforced by the United States in a court of competent jurisdiction.

Pursuant to the requirements established by Section 120(h) of the Comprehensive Environmental Response, Compensation, and Liability Act (42 U.S.C. 9620(h)) (CERCLA), as amended by the Superfund Amendments and Reauthorization Act of 1988, (100 Stat. 1670), notice is hereby given that the above-described parcel has been examined and no evidence was found to indicate that any hazardous substances have been stored for 1 year or more, nor had any hazardous substances been disposed of or released on the subject property.

Classification Comments: Interested persons may submit comments involving the suitability of the land for development as a base of operations for a nonprofit organization providing recreational opportunities, to include: A warehouse, fenced yard, small administrative office, and two units of employee housing. Comments on the classification are restricted to whether the land is physically suited for the proposal, whether the use will maximize the future use or uses of the land, whether the use is consistent with local planning and zoning, or if the use is consistent with state and Federal programs.

Application Comments: Interested persons may submit comments, including notification of any encumbrances or other claim relating to the parcel, and regarding the specific use proposed in the application and plan of development, whether the BLM followed proper administrative procedures in reaching the decision, or any other factors not directly related to the suitability of the land for recreational use and development. Any adverse comments will be reviewed by the BLM Colorado State Director. In the absence of any adverse comments, this realty action will become effective on September 21, 2010. The land will not be offered for lease or conveyance until after the classification becomes effective.

Before including your address, phone number, e-mail address, or other personal identifying information in your comment, be advised that your entire comment—including your personal identifying information—may be made publicly available at any time. While you can ask us in your comment to withhold from public review your personal identifying information, we cannot guarantee that we will be able to do so.

Authority: 43 CFR 2741.5.

John Mehlhoff,

Associate State Director.

[FR Doc. 2010–18049 Filed 7–22–10; 8:45 am]

BILLING CODE 4310–JB–P

DEPARTMENT OF THE INTERIOR

Bureau of Land Management

[LLIDT03000–L14300000.FR0000; IDI–36299]

Notice of Realty Action: Recreation and Public Purposes Act Classification for Conveyance of Public Lands in Blaine County, ID

AGENCY: Bureau of Land Management.

ACTION: Notice of realty action.

SUMMARY: The Bureau of Land Management (BLM) has examined and found suitable for classification and conveyance under the provisions of the Recreation and Public Purposes Act (R&PP), as amended (43 U.S.C. 869 *et seq.*), approximately 242.72 acres of public land in Blaine County, Idaho. Blaine County, by and through the Blaine County Board of County Commissioners, has applied to acquire the land for expansion of the existing Ohio Gulch transfer station and also for recreational use.

DATES: Interested parties may submit written comments regarding the classification or conveyance of the public lands described in this notice by close of business on September 7, 2010.

ADDRESSES: Mail written comments concerning this Notice to Ruth A. Miller, Shoshone Field Manager, BLM, Shoshone Field Office, 400 West F Street, Shoshone, Idaho 83352.

FOR FURTHER INFORMATION CONTACT: Tara Hagen, Realty Specialist, at the above address or phone at (208) 732–7205.

SUPPLEMENTARY INFORMATION: Pursuant to regulations found at 43 CFR 2400.0–3(a) and in accordance with Section 7 of the Taylor Grazing Act (43 U.S.C. 315f), the following described public land in Blaine County, Idaho, has been examined and found suitable for classification and conveyance under the provisions of the R&PP Act, as amended (43 U.S.C. 869 *et seq.*). Classification under Section 7 of the Taylor Grazing Act is a prerequisite to the approval of all entries, selections, or locations under the R&PP Act. The area described contains 242.72 acres, more or less, in Blaine County. In accordance with the R&PP Act, Blaine County has filed an application for classification and conveyance of the following described public land for (1) expansion of the existing Ohio Gulch transfer station (60 acres), and (2) recreational use (182.72 acres):

Area 1—Transfer Station

Boise Meridian, Idaho

T. 3 N., R. 18 E.,
Sec. 15, W½E½NW¼, SE¼SW¼SW¼NW¼, S½SE¼SW¼NW¼.

The area described contains 60 acres.

Area 2—Recreation

Boise Meridian, Idaho

T. 3 N., R. 18 E.,
Sec. 10, lot 3, SE¼SW¼SE¼SW¼, SW¼SE¼SE¼SW¼, and E½SE¼SE¼SW¼;
Sec. 15, W½NE¼, E½E½NW¼, NW¼NW¼SW¼, and N½NW¼SW¼.

The area described contains 182.77 acres.

Both areas aggregate 242.72 acres, more or less.

Pursuant to the requirements established by section 120(h) of the Comprehensive Environmental Response, Compensation and Liability Act (42 U.S.C. 9620(h)) as amended by the Superfund Amendments and Reauthorization Act of 1988 (100 Stat. 1670), notice is hereby given that the above-described public land has been examined and no evidence was found to indicate that any hazardous substances have been stored for 1 year or more, nor had any hazardous substances been disposed of or released on the property.

The lands are not needed for Federal purposes and conveyance is in the public interest. The conveyance of this parcel of public land is consistent with the BLM Shoshone Field Office Sun Valley Management Framework Plan, approved by the BLM in 1981 and amended by the Amendments to Shoshone Field Office Land Use Plans for Land Tenure Adjustment and Areas of Critical Environmental Concern (Amendment) in 2003. According to the Amendment, the BLM prefers land disposal through R&PP Act patents to local or State governments because these entities are expected to provide long-term land management to meet the needs of the public. Blaine County meets this criterion, as its intent is to continue providing the existing recreational opportunities as well as to acquire public land to support infrastructure and extend community services.

The land will not be sold until at least 60 days after the date of publication of this notice in the **Federal Register**. Pursuant to the R&PP Act, permanent conveyances of land for recreation or historical monument purposes are made without charge to State and local governments. The special pricing schedule for land which will be government-controlled, used for government purposes, and serve the public (*i.e.* transfer stations) is $10 an acre, with a minimum price per conveyance of $50. The 60 acres to be used to expand the construction and demolition debris disposal area at the existing Ohio Gulch transfer station will be offered to Blaine County for $600.

Any patent issued to Blaine County will contain the following terms, conditions and reservations:

1. The patent is subject to the provisions of the R&PP Act and to all applicable regulations of the Secretary of the Interior;

2. A right-of-way is reserved for ditches and canals constructed by the authority of the United States, Act of August 30, 1890 (43 U.S.C. 945);

3. The patent is subject to valid existing rights. Subject to limitations prescribed by law and regulation, and prior to patent issuance, a holder of any right-of-way within the disposal area will be given the opportunity to amend the right-of-way for conversion to a new term, including perpetuity, if applicable;

4. The United States will maintain ownership of all minerals, together with the right to prospect for, mine, and remove such deposits from the same under applicable law and such regulations as the Secretary of the Interior may prescribe;

5. The patent is conditioned on the receipt of an appropriate indemnification clause protecting the United States from claims arising out of the patentee's use, occupancy, or operation of the premises; and

6. Any other terms and conditions deemed necessary or appropriate by the Authorized Officer.

With respect to the 60 acres to be used for the transfer station expansion, the following additional provisions will be required:

a. The patentee shall comply with all Federal and State laws applicable to the disposal, placement, or release of hazardous substances.

b. The patentee shall indemnify and hold harmless the United States against any legal liability or future costs that may arise out of any violations of such laws.

c. The land conveyed to the County shall revert to the United States unless substantially used in accordance with an approved plan and schedule of development on or before the day 5 years after the date of conveyance. However, no portion of the property shall revert to the United States under any circumstances if such portion has been used for solid waste disposal or for any other purpose that the authorized officer determines may result in the disposal, placement, or release of any hazardous substance.

d. If, at any time, the patentee transfers to another party ownership of any portion of the land not used for the

purpose specified in the application and the approved plan of development, the patentee shall pay the BLM the fair market value, as determined by the authorized officer, of the transferred portion as of the date of transfer, including the value of any improvements thereon.

With respect to the 182.72 acres that will be used for public recreation purposes, the following additional provisions will be required:

a. Title to the property shall revert to the United States upon a finding, after notice and opportunity for a hearing, that, without the approval of the authorized officer:

(1) The patentee or its approved successor is attempting to transfer title to or control over the lands to another;

(2) The lands have been devoted to a use other than that for which the lands were conveyed;

(3) The lands have not been used for the purpose for which they were conveyed for a 5-year period; or

(4) The patentee has failed to follow the approved development plan or management plan.

b. The Secretary of the Interior may take action to revest title in the United States if the patentee directly or indirectly permits his agents, employees, contractors, or subcontractors (including lessees, sublessees, and permittees) to prohibit or restrict the use of any part of the patented lands or any of the facilities thereon by any person because of such person's race, creed, color, sex or national origin.

On July 23, 2010, the above-described public land will be segregated from all other forms of appropriation under the public land laws, including the general mining laws, except for conveyance under the R&PP Act, leasing under the mineral leasing laws, and disposals under the mineral material disposal laws. The segregative effect will terminate upon issuance of a patent or publication in the **Federal Register** of a termination of the segregation.

Detailed information concerning the proposed conveyance, including the planning and environmental documents are available for review at the BLM Shoshone Field Office at the location identified in **ADDRESSES** above. Normal business hours are 7:45 a.m. to 4:30 p.m., Monday through Friday, except for Federal holidays.

Public Comments: Interested parties may submit comments involving the suitability of the land for (1) Expansion of the existing Ohio Gulch transfer station; and (2) Recreation. Comments on the classification should be limited to whether the land is physically suited for the proposal, whether the use will maximize the future use or uses of the land, whether the use is consistent with local planning and zoning, or whether the use is consistent with State and Federal programs.

Interested parties may also submit comments regarding other proposed decisions for the R&PP Act application and plan of development, whether the BLM followed proper administrative procedures in reaching the decision to convey the described public land under the R&PP Act, or any other factor not directly related to the suitability of the land for recreation and public purposes.

Only written comments submitted via the U.S. Postal Service or other delivery services or hand-delivered to the BLM Shoshone Field Manager (see **ADDRESSES** above) on or before September 7, 2010 will be considered properly filed. Electronic mail, facsimile, or telephone comments will not be considered properly filed.

Comments, including names and street addresses of respondents, will be available for public review at the BLM Shoshone Field Office during regular business hours, except holidays. Before including your address, phone number, e-mail address, or other personal identifying information in your comment, you should be aware that your entire comment—including your personal identifying information—may be made publicly available at any time. While you can ask us in your comment to withhold your personal identifying information from public review, we cannot guarantee that we will be able to do so.

Any adverse comments will be reviewed by the BLM Idaho State Director. In the absence of any adverse comments, the classification of the land described in this notice will become effective on September 21, 2010. The land will not be available for conveyance until after the classification becomes effective.

Authority: 43 CFR 2741.5.

Ruth A. Miller,

Shoshone Field Manager.

[FR Doc. 2010–18047 Filed 7–22–10; 8:45 am]

BILLING CODE 4310–GG–P

INTERNATIONAL TRADE COMMISSION

[Inv. No. 337–TA–564]

Enforcement Proceeding: In the Matter of: Certain Voltage Regulators, Components Thereof and Products Containing Same; Notice of Final Determination

AGENCY: U.S. International Trade Commission.

ACTION: Notice.

SUMMARY: The United States International Trade Commission hereby provides notice that it has made a final determination in the above-captioned proceeding.

FOR FURTHER INFORMATION CONTACT: Paul M. Bartkowski, Office of the General Counsel, U.S. International Trade Commission, 500 E Street, SW., Washington, DC 20436, telephone (202) 708–5432. Copies of all nonconfidential documents filed in connection with this investigation are or will be available for inspection during official business hours (8:45 a.m. to 5:15 p.m.) in the Office of the Secretary, U.S. International Trade Commission, 500 E Street, SW., Washington, DC 20436, telephone 202–205–2000. General information concerning the Commission may also be obtained by accessing its Internet server (*http://www.usitc.gov*). The public record for this investigation may be viewed on the Commission's electronic docket (EDIS) at *http://edis.usitc.gov/.* Hearing-impaired persons are advised that information on the matter can be obtained by contacting the Commission's TDD terminal on 202–205–1810.

SUPPLEMENTARY INFORMATION: The Commission instituted the investigation underlying this enforcement proceeding on March 22, 2006, based on a complaint filed by Linear Technology Corporation ("Linear") of Milpitas, California. 71 FR 14545. The complaint, as supplemented, alleged violations of section 337 of the Tariff Act of 1930 (19 U.S.C. 1337) in the importation into the United States, the sale for importation, and the sale within the United States after importation of certain voltage regulators, components thereof and products containing the same, by reason of infringement of certain claims of United States Patent No. 6,411,531 and of United States Patent No. 6,580,258 ("the '258 patent"). The complaint named Advanced Analogic Technologies, Inc. ("AATI") of Sunnyvale, California as the sole respondent. After Commission review of the administrative law judge's ("ALJ")

final ID, the Commission determined that there was a violation of section 337 by AATI with respect to certain asserted claims of the '258 patent and issued a limited exclusion order ("LEO") consistent with its findings of violation. Subsequently, based on an enforcement complaint filed by Linear, the Commission instituted an enforcement proceeding by notice in the **Federal Register** on October 10, 2008.

On March 18, 2010, the ALJ issued the subject ID, finding that, due to infringement of claims 2 and 34 of the '258 patent by the accused products, AATI violated the LEO. On May 17, 2010, the Commission determined not to review the ID and requested briefing from the parties regarding remedy, the public interest, and bonding.

Having reviewed the record of this investigation, including the recent submissions by the parties, for the reasons set forth in the Commission Opinion, the Commission has determined not to modify the existing limited exclusion order and not to issue a cease-and-desist order. The products at issue in the enforcement proceeding are covered by the existing limited exclusion order, and should be excluded thereunder.

The authority for the Commission's determination is contained in section 337 of the Tariff Act of 1930, as amended (19 U.S.C. 1337), and in part 210 of the Commission's Rules of Practice and Procedure (19 CFR part 210).

Issued: July 19, 2010.

By order of the Commission.

William R. Bishop,

Acting Secretary to the Commission.

[FR Doc. 2010–18031 Filed 7–22–10; 8:45 am]

BILLING CODE P

INTERNATIONAL TRADE COMMISSION

[Investigation No. 337–TA–706]

In the Matter of Certain Wireless Communications System Server Software, Wireless Handheld Devices and Battery Packs: Notice of Commission Determination Not To Review An Initial Determination Terminating the Investigation In Its Entirety On the Basis of A Settlement Agreement; Termination of the Investigation

AGENCY: U.S. International Trade Commission.

ACTION: Notice.

SUMMARY: Notice is hereby given that the U.S. International Trade Commission has determined not to review an initial determination ("ID") (Order No. 13) of the presiding administrative law judge ("ALJ") terminating the above-captioned investigation on the basis of a settlement agreement.

FOR FURTHER INFORMATION CONTACT: Jia Chen, Esq., Office of the General Counsel, U.S. International Trade Commission, 500 E Street, SW., Washington, DC 20436, telephone (202) 708–4737. Copies of non-confidential documents filed in connection with this investigation are or will be available for inspection during official business hours (8:45 a.m. to 5:15 p.m.) in the Office of the Secretary, U.S. International Trade Commission, 500 E Street, SW., Washington, DC 20436, telephone (202) 205–2000. General information concerning the Commission may also be obtained by accessing its Internet server at *http://www.usitc.gov.* The public record for this investigation may be viewed on the Commission's electronic docket (EDIS) at *http://edis.usitc.gov.* Hearing-impaired persons are advised that information on this matter can be obtained by contacting the Commission's TDD terminal on (202) 205–1810.

SUPPLEMENTARY INFORMATION: The Commission instituted this investigation on February 24, 2010, based on a complaint filed by Motorola, Inc. ("Motorola") of Schaumburg, Illinois. 75 FR 8401 (Feb. 24, 2010). The complainant named the following respondents: Research in Motion Limited and Research in Motion Corporation (collectively "RIM"). The complaint alleges violations of section 337 of the Tariff Act of 1930, 19 U.S.C. 1337, based upon the importation into the United States, the sale for importation, and the sale within the United States after importation of certain wireless communications system server software, wireless handheld devices and battery packs by reason of infringement of certain claims of U.S. Patent Nos. 5,319,712; 5,359,317; 5,569,550; 6,232,970; and 6,272,333.

On June 17, 2010, Motorola and RIM filed a joint motion before the ALJ to terminate the investigation on the basis of a settlement agreement. A copy of their settlement agreement is attached to the joint motion. On June 24, 2010, the Commission investigative attorney ("IA") filed a response supporting the parties' motion. On June 29, 2010, the ALJ issued the subject ID granting the joint motion to terminate. No petitions for review were filed.

The Commission has determined not to review the ID. The investigation is terminated.

The authority for the Commission's determination is contained in section 337 of the Tariff Act of 1930, as amended (19 U.S.C. 1337), and in section 210.42(h) of the Commission's Rules of Practice and Procedure (19 CFR 210.42(h)).

By order of the Commission.

Issued: July 20, 2010.

William R. Bishop,

Acting Secretary to the Commission.

[FR Doc. 2010–18048 Filed 7–22–10; 8:45 am]

BILLING CODE P

DEPARTMENT OF JUSTICE

Notice of Lodging of Consent Decree Under the Clean Water Act

Notice is hereby given that on July 20, 2010, a proposed Consent Decree in *United States* v. *Cardi Materials, LLC ("Cardi")* Civil Action No. 10–300 (ML), was lodged with the United States District Court for the District of Rhode Island.

In this action, the United States seeks, *inter alia,* injunctive relief in relation to discharges by Cardi from its concrete and asphalt manufacturing facility, in violation of, and at times in the absence of a National Pollutant Discharge Elimination System Permit issued under the Clean Water Act, 33 U.S.C. 1251, *et seq.,* and with respect to violations of the Oil Pollution Prevention regulations at 40 CFR part 112. The Consent Decree requires Cardi, among other things, to: (1) Eliminate process water discharge; (2) maintain compliance with applicable storm water discharge permits and its storm water prevention plan; (3) maintain compliance with a suitable spill prevention control and countermeasure plan; (4) designate a qualified environmental compliance officer; (5) conduct employee training; and (6) conducting quarterly storm water sampling. The Consent Decree also requires Cardi to pay a civil penalty of $55,000.00 and undertake a Supplemental Environmental Project.

The Department of Justice will receive for a period of thirty (30) days from the date of this publication comments relating to the Consent Decree. Comments should be addressed to the Assistant Attorney General, Environment and Natural Resources Division, and either e-mailed to *pubcomment-ees.enrd@usdoj.gov* or mailed to P.O. Box 7611, U.S. Department of Justice, Washington, DC 20044–7611, and should refer to *United*

States v. *Cardi Materials LLC,* D.J. Ref. 90–5–1–1–09413.

The Consent Decree may be examined at the Office of the United States Attorney, District of Rhode Island, 50 Kennedy Plaza, Providence, RI, and at U.S. EPA Region 1, 1 Congress Street, Boston, MA. During the public comment period, the Consent Decree, may also be examined on the following Department of Justice Web site, to *http://www.usdoj.gov/enrd/Consent_Decrees.html.* A copy of the Consent Decree may also be obtained by mail from the Consent Decree Library, P.O. Box 7611, U.S. Department of Justice, Washington, DC 20044–7611 or by faxing or e-mailing a request to Tonia Fleetwood (*tonia.fleetwood@usdoj.gov*), fax no. (202) 514–0097, phone confirmation number (202) 514–1547. In requesting a copy from the Consent Decree Library, please enclose a check in the amount of $15.25 (25 cents per page reproduction costs of Consent Decree and Appendices) payable to the U.S. Treasury or, if by e-mail or fax, forward a check in that amount to the Consent Decree Library at the stated address.

Maureen Katz,

Assistant Chief, Environmental Enforcement Section, Environment and Natural Resources Division.

[FR Doc. 2010–18073 Filed 7–22–10; 8:45 am]

BILLING CODE 4410–15–P

DEPARTMENT OF LABOR

Employment and Training Administration

Request for Certification of Compliance —Rural Industrialization Loan and Grant Program

AGENCY: Employment and Training Administration, Labor.

ACTION: Notice.

SUMMARY: The Employment and Training Administration is issuing this notice to announce the receipt of a "Certification of Non-Relocation and Market and Capacity Information Report" (Form 4279–2) for the following:

Applicant/Location: The Ballparks of Cooperstown, LLC/Richfield and Warren, New York.

Principal Product/Purpose: The loan, guarantee, or grant application is to allow a new business venture to acquire land, pay for design and entitlement work, and cover short-term operating expenses. The NAICS industry codes for this enterprise are: 713990 All Other Amusement and Recreational Industries; and, 722310 Food Service Contractors.

DATES: All interested parties may submit comments in writing no later than August 6, 2010. Copies of adverse comments received will be forwarded to the applicant noted above.

ADDRESSES: Address all comments concerning this notice to Anthony D. Dais, U.S. Department of Labor, Employment and Training Administration, 200 Constitution Avenue, NW., Room S–4231, Washington, DC 20210; or e-mail *Dais.Anthony@dol.gov;* or transmit via fax (202) 693–3015 (this is not a toll-free number).

FOR FURTHER INFORMATION CONTACT: Anthony D. Dais, at telephone number (202) 693–2784 (this is not a toll-free number).

SUPPLEMENTARY INFORMATION: Section 188 of the Consolidated Farm and Rural Development Act of 1972, as established under 29 CFR Part 75, authorizes the United States Department of Agriculture to make or guarantee loans or grants to finance industrial and business activities in rural areas. The Secretary of Labor must review the application for financial assistance for the purpose of certifying to the Secretary of Agriculture that the assistance is not calculated, or likely, to result in: (a) A transfer of any employment or business activity from one area to another by the loan applicant's business operation; or, (b) An increase in the production of goods, materials, services, or facilities in an area where there is not sufficient demand to employ the efficient capacity of existing competitive enterprises unless the financial assistance will not have an adverse impact on existing competitive enterprises in the area. The Employment and Training Administration within the Department of Labor is responsible for the review and certification process. Comments should address the two bases for certification and, if possible, provide data to assist in the analysis of these issues.

Signed: at Washington, DC, this 19th day of July 2010.

Jane Oates,

Assistant Secretary for Employment and Training.

[FR Doc. 2010–18045 Filed 7–22–10; 8:45 am]

BILLING CODE 4510–FN–P

NUCLEAR REGULATORY COMMISSION

[NRC–2009–0282]

Notice of Issuance of Regulatory Guide

AGENCY: Nuclear Regulatory Commission.

ACTION: Notice of Issuance and Availability of Regulatory Guide 1.141, Revision 1.

FOR FURTHER INFORMATION CONTACT: Robert G. Carpenter, U.S. Nuclear Regulatory Commission, Washington, DC 20555–0001, telephone (301) 251–7483 or e-mail to *Robert.Carpenter@nrc.gov.*

SUPPLEMENTARY INFORMATION:

I. Introduction

The U.S. Nuclear Regulatory Commission (NRC) is issuing a revision to an existing guide in the agency's "Regulatory Guide" series. This series was developed to describe and make available to the public information such as methods that are acceptable to the NRC staff for implementing specific parts of the agency's regulations, techniques that the staff uses in evaluating specific problems or postulated accidents, and data that the staff needs in its review of applications for permits and licenses.

Revision 1 of Regulatory Guide 1.141, "Containment Isolation Provisions for Fluid Systems," was issued with a temporary identification as Draft Regulatory Guide, DG–1213. RG 1.141 describes updated methods that the NRC staff considers acceptable for use in complying with the Commission's requirements for containment isolation of fluid systems. Title 10, of the Code of Federal Regulations, Part 50, "Domestic Licensing of Production and Utilization Facilities", Appendix A, "General Design Criteria for Nuclear Power Plants," General Design Criteria 54, 55, 56, and 57 establishes that piping systems that penetrate the primary reactor containment be provided with isolation capabilities that reflect the importance to safety of isolating these piping systems.

II. Further Information

In June 2009, DG–1213 was published with a public comment period of 60 days from the issuance of the guide. The public comment period closed on August 29, 2009. The staff received no public comments. The regulatory analysis may be found through the NRC's Agencywide Documents Access and Management System (ADAMS) under Accession No. ML101870472.

Electronic copies of Regulatory Guide 1.141, Revision 1 are available through the NRC's public Web site under "Regulatory Guides" at *http://www.nrc.gov/reading-rm/doc-collections/*.

In addition, regulatory guides are available for inspection at the NRC's Public Document Room (PDR) located at Room O–1F21, One White Flint North, 11555 Rockville Pike, Rockville, Maryland 20852–2738. The PDR's mailing address is USNRC PDR, Washington, DC 20555–0001. The PDR can also be reached by telephone at (301) 415–4737 or (800) 397–4209, by fax at (301) 415–3548, and by e-mail to *pdr.resource@nrc.gov*.

Regulatory guides are not copyrighted, and NRC approval is not required to reproduce them.

Dated at Rockville, Maryland, this 16th day of July 2010.

For the Nuclear Regulatory Commission.

Richard A. Jervey,

Acting Chief, Regulatory Guide Development Branch, Division of Engineering, Office of Nuclear Regulatory Research.

[FR Doc. 2010–18075 Filed 7–22–10; 8:45 am]

BILLING CODE 7590–01–P

NUCLEAR REGULATORY COMMISSION

[NRC–2010–0257]

Withdrawal of Regulatory Guide 5.17

AGENCY: Nuclear Regulatory Commission.

ACTION: Withdrawal of Regulatory Guide 5.17, "Truck Identification Markings".

FOR FURTHER INFORMATION CONTACT: Robert G. Carpenter, Regulatory Guide Development Branch, Division of Engineering, Office of Nuclear Regulatory Research, U.S. Nuclear Regulatory Commission, Washington, DC 20555–0001, telephone: 301–251–7483 or e-mail *Robert.Carpenter@nrc.gov.*

SUPPLEMENTARY INFORMATION:

I. Introduction

The U.S. Nuclear Regulatory Commission (NRC) is withdrawing Regulatory Guide 5.17, "Truck Identification Markings,"published in January 1974. Regulatory Guide 5.17 identifies methods acceptable to the NRC staff for complying with the former NRC regulation, 10 CFR 73.31(e) (1973), "Shipment By Road,"with regard to markings applied to a road vehicle to enhance its identification from the air.

Specifically, former § 73.31(e) required that vehicles used to transport quantities of special nuclear material by road be marked on top with identifying letters or numbers which will permit identification of the vehicles under daylight conditions from the air in clear weather at 1,000 feet above ground level. Regulatory Guide 5.17 is no longer needed because the guidance is outdated. Former § 73.31(e) has been deleted (44 FR 68184; November 28, 1979) and the information is now contained in the Department of Transportation (DOT) regulations 49 CFR parts 172 through 180. These DOT regulations specify the shape, color, material, markings, and display locations for all types of hazardous material placards, including radioactive materials. The regulation is prescriptive by nature and these DOT regulations are routinely updated; therefore, reproducing the requirements in a regulatory guide is unnecessarily redundant and could lead to frequently outdated guidance.

II. Further Information

The withdrawal of Regulatory Guide 5.17 does not alter any prior or existing licensing commitments based on its use. The guidance provided in this regulatory guide is no longer necessary. Regulatory guides may be withdrawn when their guidance is superseded by congressional action or otherwise no longer provides useful information.

Regulatory guides are available for inspection or downloading through the NRC's public Web site under "Regulatory Guides"in the NRC's Electronic Reading Room at *http://www.nrc.gov/reading-rm/doc-collections.* Regulatory guides are also available for inspection at the NRC's Public Document Room (PDR), Room O–1 F21, One White Flint North, 11555 Rockville Pike, Rockville, Maryland 20852–2738. The PDR's mailing address is US NRC PDR, Washington, DC 20555–0001. You can reach the staff by telephone at 301–415–4737 or 800–397–4209, by fax at 301–415–3548, and by e-mail to *pdr.resource@nrc.gov.*

Regulatory guides are not copyrighted, and NRC approval is not required to reproduce them.

Dated at Rockville, Maryland, this 15th day of July 2010.

For the Nuclear Regulatory Commission.

Andrea D. Valentin,

Chief, Regulatory Guide Development Branch, Division of Engineering, Office of Nuclear Regulatory Research.

[FR Doc. 2010–18077 Filed 7–22–10; 8:45 am]

BILLING CODE 7590–01–P

SECURITIES AND EXCHANGE COMMISSION

[Rule 17f–1(g); SEC File No. 270–30; OMB Control No. 3235–0290]

Proposed Collection; Comment Request

Upon Written Request, Copies Available From: Securities and Exchange Commission, Office of Investor Education and Advocacy, Washington, DC 20549–0213.

Extension:
Rule 17f–1(g), SEC File No. 270–30, OMB Control No. 3235–0290.

Notice is hereby given that pursuant to the Paperwork Reduction Act of 1995 (44 U.S.C. 3501 *et seq.*), the Securities and Exchange Commission ("Commission") is soliciting comments on the existing collection provided for in Rule 17f–1(g) (17 CFR 240.17f–1(g)), under the Securities Exchange Act of 1934 (15 U.S.C. 78a *et seq.*). The Commission plans to submit this existing collection of information to the Office of Management and Budget for extension and approval.

Paragraph (g) of Rule 17f–1 requires that all reporting institutions (*i.e.,* every national securities exchange, member thereof, registered securities association, broker, dealer, municipal securities dealer, registered transfer agent, registered clearing agency, participant therein, member of the Federal Reserve System and bank insured by the FDIC) maintain and preserve a number of documents related to their participation in the Lost and Stolen Securities Program ("Program") under Rule 17f–1. The following documents must be kept in an easily accessible place for three years, according to paragraph (g): (1) Copies or all reports of theft or loss (Form X–17F–1A) filed with the Commission's designee; (2) all agreements between reporting institutions regarding registration in the Program or other aspects of Rule 17f–1; and (3) all confirmations or other information received from the Commission or its designee as a result of inquiry.

Reporting institutions utilize these records and reports (a) to report missing, lost, stolen or counterfeit securities to the database, (b) to confirm inquiry of the database, and (c) to demonstrate compliance with Rule 17f–1. The Commission and the reporting institutions' examining authorities utilize these records to monitor the incidence of thefts and losses incurred by reporting institutions and to determine compliance with Rule 17f–1. If such records were not retained by

reporting institutions, compliance with Rule 17f–1 could not be monitored effectively.

The Commission estimates that there are 25,458 reporting institutions (respondents) and, on average, each respondent would need to retain 33 records annually, with each retention requiring approximately 1 minute (33 minutes or .55 hours). The total estimated annual burden is 14,001.9 hours (25,458 × .55 hours = 14,001.9). Assuming an average hourly cost for clerical work of $50.00, the average total yearly record retention cost for each respondent would be $27.50 ($50 × .55 hours). Based on these estimates, the total annual cost for the estimated 25,458 reporting institutions would be approximately $700,095 (25,458 × $27.50).

Written comments are invited on: (a) Whether the proposed collection of information is necessary for the proper performance of the functions of the Commission, including whether the information shall have practical utility; (b) the accuracy of the Commission's estimates of the burden of the proposed collection of information; (c) ways to enhance the quality, utility, and clarity of the information to be collected; and (d) ways to minimize the burden of the collection of information on respondents, including through the use of automated collection techniques or other forms of information technology. Consideration will be given to comments and suggestions submitted in writing within 60 days of this publication.

Please direct your written comments to: Charles Boucher, Director/Chief Information Officer, Securities and Exchange Commission, c/o Shirley Martinson, 6432 General Green Way, Alexandria, Virginia 22312 or send an e-mail to: *PRA_Mailbox@sec.gov.*

Dated: July 19, 2010.

Florence E. Harmon,

Deputy Secretary.

[FR Doc. 2010–18072 Filed 7–22–10; 8:45 am]

BILLING CODE 8010–01–P

SECURITIES AND EXCHANGE COMMISSION

[Rule 17a–1; SEC File No. 270–244; OMB Control No. 3235–0208]

Proposed Collection; Comment Request

Upon Written Request, Copies Available From: Securities and Exchange Commission, Office of Investor Education and Advocacy, Washington, DC 20549–0213.

Extension:

Rule 17a–1, SEC File No. 270–244, OMB Control No. 3235–0208.

Notice is hereby given that, pursuant to the Paperwork Reduction Act of 1995 (44 U.S.C. 3501 *et seq.*), the Securities and Exchange Commission ("Commission") is soliciting comments on the existing collection of information provided for in Rule 17a–1 (17 CFR 240.17a–1) under the Securities Exchange Act of 1934, as amended (the "Act") (15 U.S.C. 78a *et seq.*). The Commission plans to submit this existing collection of information to the Office of Management and Budget for extension and approval.

Rule 17a–1 requires that every national securities exchange, national securities association, registered clearing agency, and the Municipal Securities Rulemaking Board keep on file for a period of not less than five years, the first two years in an easily accessible place, at least one copy of all documents, including all correspondence, memoranda, papers, books, notices, accounts, and other such records made or received by it in the course of its business as such and in the conduct of its self-regulatory activity, and that such documents be available for examination by the Commission.

There are 22 entities required to comply with the rule: 14 national securities exchanges, 1 national securities association, 6 registered clearing agencies, and the Municipal Securities Rulemaking Board. The Commission staff estimates that the average number of hours necessary for compliance with the requirements of Rule 17a–1 is 50 hours per year. In addition, 4 national securities exchanges notice-registered pursuant to Section 6(g) of the Act (15 U.S.C. 78f(g)) are required to preserve records of determinations made under Rule 3a55–1 under the Act (17 CFR 240.3a55–1), which the Commission staff estimates will take 1 hour per exchange, for a total of 4 hours. Accordingly, the Commission staff estimates that the total number of hours necessary to comply with the requirements of Rule 17a–1 is 1,104 hours. The average cost per hour is $59. Therefore, the total cost of compliance for all respondents is $65,136.

Written comments are invited on (a) Whether the proposed collection of information is necessary for the proper performance of the functions of the Commission, including whether the information shall have practical utility; (b) the accuracy of the Commission's estimate of the burden of the proposed collection of information; (c) ways to enhance the quality, utility, and clarity of the information to be collected; and (d) ways to minimize the burden of the collection of information on respondents, including through the use of automated collection techniques or other forms of information technology. Consideration will be given to comments and suggestions submitted in writing within 60 days of this publication.

Please direct your written comments to: Charles Boucher, Director/Chief Information Officer, Securities and Exchange Commission, c/o Shirley Martinson, 6432 General Green Way, Alexandria, VA 22312 or send an e-mail to: *PRA_Mailbox@sec.gov.*

Dated: July 19, 2010.

Florence E. Harmon,

Deputy Secretary.

[FR Doc. 2010–18071 Filed 7–22–10; 8:45 am]

BILLING CODE 8010–01–P

SECURITIES AND EXCHANGE COMMISSION

Sunshine Act Meeting

Notice is hereby given, pursuant to the provisions of the Government in the Sunshine Act, Public Law 94–409, that the Securities and Exchange Commission will hold a closed meeting on Wednesday, July 21, 2010 at 12:30 p.m.

Commissioners, Counsel to the Commissioners, the Secretary to the Commission, and recording secretaries will attend the closed meeting. Certain staff members who have an interest in the matter also may be present.

The General Counsel of the Commission, or his designee, has certified that, in his opinion, one or more of the exemptions set forth in 5 U.S.C. 552b(c), (5), (7), 9(B) and (10) and 17 CFR 200.402(a), (5), (7), 9(ii) and (10), permit consideration of the scheduled matter at the closed meeting.

Commissioner Casey, as duty officer, voted to consider the item listed for the Closed Meeting in closed session, and determined that no earlier notice thereof was possible.

The subject matter of the closed meeting scheduled for Wednesday, July 21, 2010 will be:

Institution and settlement of injunctive actions.

At times, changes in Commission priorities require alterations in the scheduling of meeting items.

For further information and to ascertain what, if any, matters have been added, deleted or postponed, please contact:

The Office of the Secretary at (202) 551–5400.

Dated: July 21, 2010.

Elizabeth M. Murphy,

Secretary.

[FR Doc. 2010–18210 Filed 7–21–10; 4:15 pm]

BILLING CODE 8010–01–P

SECURITIES AND EXCHANGE COMMISSION

[Release No. 34–62528; File No. SR–BX–2010–048]

Self-Regulatory Organizations; NASDAQ OMX BX, Inc.; Notice of Filing and Immediate Effectiveness of Proposed Rule Change Extending the Pilot Period To Receive Inbound Routes of Orders From Nasdaq Execution Services

July 19, 2010

Pursuant to Section 19(b)(1) [1] of the Securities Exchange Act of 1934 ("Act") and Rule 19b–4 thereunder,[2] notice is hereby given that, on July 15, 2010, NASDAQ OMX BX, Inc. (the "Exchange" or "BX") filed with the Securities and Exchange Commission ("Commission") the proposed rule change as described in Items I and II, below, which Items have been prepared by BX. The Exchange has designated the proposed rule change as constituting a non-controversial rule change under Rule 19b–4(f)(6) under the Act,[3] which renders the proposal effective upon filing with the Commission. The Commission is publishing this notice to solicit comments on the proposed rule change from interested persons.

I. Self-Regulatory Organization's Statement of the Terms of the Substance of the Proposed Rule Change

BX submits this proposed rule change to extend the pilot period of BX's prior approval to receive inbound routes of equities orders from Nasdaq Execution Services, LLC ("NES") through January 15, 2011.

II. Self-Regulatory Organization's Statement of the Purpose of, and Statutory Basis for, the Proposed Rule Change

In its filing with the Commission, BX included statements concerning the purpose of and basis for the proposed rule change and discussed any comments it received on the proposed rule change. The text of these statements may be examined at the places specified in Item IV below. BX has prepared summaries, set forth in Sections A, B, and C below, of the most significant aspects of such statements.

A. Self-Regulatory Organization's Statement of the Purpose of, and Statutory Basis for, the Proposed Rule Change

1. Purpose

Currently, NES is the approved outbound routing facility of the NASDAQ Stock Market LLC ("NASDAQ") for cash equities, providing outbound routing from NASDAQ to other market centers.[4] BX also has been previously approved to receive inbound routes of equities orders by NES in its capacity as an order routing facility of NASDAQ on a pilot basis.[5] The Exchange hereby seeks to extend a previously approved pilot period for such inbound routing (with the attendant obligations and conditions) for an additional 6 months from the date of this filing through January 15, 2011.

2. Statutory Basis

The Exchange believes that the proposed rule change is consistent with the provisions of Section 6 of the Act,[6] in general, and with Section 6(b)(5) of the Act,[7] in particular, in that the proposal is designed to prevent fraudulent and manipulative acts and practices, to promote just and equitable principles of trade, to foster cooperation and coordination with persons engaged in regulating, clearing, settling, processing information with respect to, and facilitating transactions in securities, to remove impediments to and perfect the mechanism of a free and open market and a national market system, and, in general, to protect investors and the public interest. Specifically, the proposed rule change will allow the Exchange to continue receiving inbound routes of equities orders from NES acting in its capacity as a facility of Nasdaq, in a manner consistent with prior approvals and established protections. The Exchange believes that extending the previously approved pilot period for six months is of sufficient length to permit both the Exchange and the Commission to assess the impact of the Exchange's authority to receive direct inbound routes of equities orders via NES (including the attendant obligations and conditions).

B. Self-Regulatory Organization's Statement on Burden on Competition

BX does not believe that the proposed rule change will impose any burden on competition not necessary or appropriate in furtherance of the purposes of the Act.

C. Self-Regulatory Organization's Statement on Comments on the Proposed Rule Change Received From Members, Participants, or Others

No written comments were either solicited or received.

III. Date of Effectiveness of the Proposed Rule Change and Timing for Commission Action

Because the foregoing rule change does not: (1) Significantly affect the protection of investors or the public interest; (2) impose any significant burden on competition; and (3) become operative for 30 days after the date of this filing, or such shorter time as the Commission may designate, it has become effective pursuant to Section 19(b)(3)(A) of the Act [8] and Rule 19b–4(f)(6) thereunder.[9]

A proposed rule change filed under 19b–4(f)(6) normally may not become operative prior to 30 days after the date of filing.[10] However, Rule 19b–4(f)(6)(iii) [11] permits the Commission to designate a shorter time if such action is consistent with the protection of

[1] 15 U.S.C.78s(b)(1).

[2] 17 CFR 240.19b–4.

[3] 17 CFR 240.19b–4(f)(6).

[4] *See* Securities Exchange Act Release Nos. 50311 (September 3, 2004), 69 FR 54818 (September 10, 2004) (Order Granting Application for a Temporary Conditional Exemption Pursuant To Section 36(a) of the Exchange Act by the National Association of Securities Dealers, Inc. Relating to the Acquisition of an ECN by The Nasdaq Stock Market, Inc.) and 52902 (December 7, 2005), 70 FR 73810 (December 13, 2005) (SRNASD–2005–128) (Order Approving a Proposed Rule Change To Establish Rules Governing the Operation of the INET System). *See also* Securities Exchange Act Release Nos. 58752 (October 8, 2008), 73 FR 61181 (October 15, 2008) (SR–NASDAQ–2008–079); 58135 (July 10, 2008), 73 FR 40898 (July 16, 2008) (SR–NASDAQ–2008–061); 58069 (June 30, 2008), 73 FR 39360 (July 9, 2008) (SR–NASDAQ–2008–054); 56708 (October 26, 2007), 72 FR 61925 (November 1, 2007) (SR–NASDAQ–2007–078); 56867 (November 29, 2007), 72 FR 69263 (December 7, 2007) (SR–NASDAQ–2007–065); 55335 (February 23, 2007), 72 FR 9369 (March 1, 2007) (SR–NASDAQ–2007–005); 54613 (October 17, 2006), 71 FR 62325 (October 24, 2006) (SR–NASDAQ 2006–043); 54271 (August 3, 2006), 71 FR 45876 (August 10, 2006) (SR–NASDAQ–2006–027); and 54155 (July 14, 2006), 71 FR 41291 (July 20, 2006) (SR–NASDAQ–2006–001).

[5] *See* Securities Exchange Act Release Nos. 59154 (December 23, 2008), 73 FR 80468 (December 31, 2008); 61271 (December 31, 2009), 75 FR 1102 (January 8, 2010); 61782 (March 25, 2010), 75 FR 16534 (April 1, 2010).

[6] 15 U.S.C. 78f.

[7] 15 U.S.C. 78f(b)(5).

[8] 15 U.S.C. 78s(b)(3)(A).

[9] 17 CFR 240.19b–4(f)(6).

[10] 17 CFR 240.19b–4(f)(6)(iii). In addition, Rule 19b–4(f)(6)(iii) requires that a self-regulatory organization submit to the Commission written notice of its intent to file the proposed rule change, along with a brief description and text of the proposed rule change, at least five business days prior to the date of filing of the proposed rule change, or such shorter time as designated by the Commission. The Exchange has satisfied this requirement.

[11] *Id.*

investors and the public interest. BX has requested that the Commission waive the 30-day operative delay. BX notes that the proposal will allow the Exchange to continue receiving inbound routes of equities orders from NES, in a manner consistent with prior approvals and established protections, while also permitting the Exchange and the Commission to assess the impact of the pilot.[12] The Commission believes that waiving the 30-day operative delay is consistent with the protection of investors and the public interest because such waiver would allow the pilot period to be extended without undue delay through January 15, 2011. For this reason, the Commission designates the proposed rule change to be operative upon filing with the Commission.[13]

At any time within 60 days of the filing of such proposed rule change the Commission may summarily abrogate such rule change if it appears to the Commission that such action is necessary or appropriate in the public interest, for the protection of investors or otherwise in furtherance of the purposes of the Act.

IV. Solicitation of Comments

Interested persons are invited to submit written data, views, and arguments concerning the foregoing, including whether the proposed rule change is consistent with the Act. Comments may be submitted by any of the following methods:

Electronic Comments

- Use the Commission's Internet comment form (*http://www.sec.gov/rules/sro.shtml*); or
- Send an e-mail to *rule-comments@sec.gov.* Please include File Number SR–BX–2010–048 on the subject line.

Paper Comments

- Send paper comments in triplicate to Elizabeth M. Murphy, Secretary, Securities and Exchange Commission, 100 F Street, NE., Washington, DC 20549–1090.

All submissions should refer to File Number SR–BX–2010–048. This file number should be included on the subject line if e-mail is used. To help the Commission process and review your comments more efficiently, please use only one method. The Commission will post all comments on the Commission's Internet Web site (*http://www.sec.gov/rules/sro.shtml*). Copies of the submission, all subsequent amendments, all written statements with respect to the proposed rule change that are filed with the Commission, and all written communications relating to the proposed rule change between the Commission and any person, other than those that may be withheld from the public in accordance with the provisions of 5 U.S.C. 552, will be available for Web site viewing and printing in the Commission's Public Reference Room on official business days between the hours of 10 a.m. and 3 p.m. Copies of such filing also will be available for inspection and copying at the principal office of the Exchange. All comments received will be posted without change; the Commission does not edit personal identifying information from submissions. You should submit only information that you wish to make available publicly. All submissions should refer to File Number SR–BX–2010–048 and should be submitted on or before August 13, 2010.

For the Commission, by the Division of Trading and Markets, pursuant to delegated authority.[14]

Florence E. Harmon,

Deputy Secretary.

[FR Doc. 2010–18070 Filed 7–22–10; 8:45 am]

BILLING CODE 8010–01–P

[12] *See supra* Section II.A.2.

[13] For the purposes only of waiving the 30-day operative delay, the Commission has considered the proposed rule's impact on efficiency, competition, and capital formation. *See* 15 U.S.C. 78c(f).

[14] 17 CFR 200.30–3(a)(12).

SECURITIES AND EXCHANGE COMMISSION

[Release No. 34–62523; File No. SR–ISE–2010–73]

Self-Regulatory Organizations; International Securities Exchange, LLC; Notice of Filing of Proposed Rule Change Relating to Modified Rules for Qualified Contingent Cross Orders

July 16, 2010.

Pursuant to Section 19(b)(1) of the Securities Exchange Act of 1934 ("Act"),[1] and Rule 19b–4 thereunder,[2] notice is hereby given that on July 14, 2010, the International Securities Exchange, LLC ("Exchange" or "ISE") filed with the Securities and Exchange Commission ("Commission") the proposed rule change as described in Items I, II, and III below, which items have been prepared by the self-regulatory organization. The Commission is publishing this notice to solicit comments on the proposed rule change from interested persons.

I. Self-Regulatory Organization's Statement of the Terms of Substance of the Proposed Rule Change

The Exchange is proposing modified Qualified Contingent Cross Orders.[3] The text of the proposed rule change is as follows, with deletions in [brackets] and additions in *italics:*

Rule 715. Types of Orders

(a) through (i) no change.

(j) Qualified Contingent Cross Order. A Qualified Contingent Cross Order is comprised of an order to buy or sell at least 1000 contracts that is identified as being part of a qualified contingent trade, as that term is defined in Supplementary Material .01 below, coupled with a contra-side order to buy or sell an equal number of contracts.

(k) through (l) no change.

Supplementary Material to Rule 715

.01 A "qualified continent trade" is a transaction consisting of two or more component orders, executed as agent or principal, where:

(a) At least one component is an NMS Stock, as defined in Rule 600 of Regulation NMS under the Exchange Act;

(b) all components are effected with a product or price contingency that either has been agreed to by all the respective counterparties or arranged for by a broker-dealer as principal or agent;

(c) the execution of one component is contingent upon the execution of all other components at or near the same time;

(d) the specific relationship between the component orders (e.g., the spread between the prices of the component orders) is determined by the time the contingent order is placed;

(e) the component orders bear a derivative relationship to one another, represent different classes of shares of the same issuer, or involve the securities of participants in mergers or with

[1] 15 U.S.C. 78s(b)(1).

[2] 17 CFR 240.19b–4.

[3] The Exchange first proposed to adopt Qualified Contingent Cross Orders in SR–ISE–2009–35. *Infra* note 6. This proposal was approved by the Division of Trading and Markets ("Division") pursuant to delegated authority, *infra* note 7, but this approval was stayed by a petition seeking fully Commission review. *Infra* note 8. The Exchange is now submitting this new proposed rule change that modifies the initial proposal, along with a letter requesting that the Commission vacate the Division's approval of SR–ISE–2009–35 simultaneously with approval of this modified proposal. Letter from Michael J. Simon, Secretary and General Counsel, ISE, dated July 14, 2010. The rule text presented in this proposed rule change shows proposed changes to ISE's rules as if the Commission vacated the Division's approval of SR–ISE–2009–35.

intentions to merge that have been announced or cancelled; and

(f) the transaction is fully hedged (without regard to any prior existing position) as a result of other components of the contingent trade.

* * * * *

Rule 721. [Customer Cross] *Crossing* Orders

(a) Customer Cross Orders are automatically executed upon entry provided that the execution is at or between the best bid and offer on the Exchange and (i) is not at the same price as a Public Customer Order on the Exchange's limit order book and (ii) will not trade through the NBBO.

[(a)] *(1)* Customer Cross Orders will be automatically canceled if they cannot be executed.

[(b)] *(2)* Customer Cross Orders may only be entered in the regular trading increments applicable to the options class under Rule 710.

[(c)] *(3)* Supplemental Material .01 to Rule 717 applies to the entry and execution of Customer Cross Orders.

(b) Qualified Contingent Cross Orders are automatically executed upon entry provided that the execution (i) is not at the same price as a Priority Customer Order on the Exchange's limit order book and (ii) is at or between the NBBO.

(1) Qualified Contingent Cross Orders will be automatically canceled if they cannot be executed.

(2) Qualified Contingent Cross Orders may only be entered in the regular trading increments applicable to the options class under Rule 710.

* * * * *

II. Self-Regulatory Organization's Statement of the Purpose of, and Statutory Basis for, the Proposed Rule Change

In its filing with the Commission, the self-regulatory organization included statements concerning the purpose of, and basis for, the proposed rule change and discussed any comments it received on the proposed rule change. The text of these statements may be examined at the places specified in Item IV below. The self-regulatory organization has prepared summaries, set forth in sections A, B and C below, of the most significant aspects of such statements.

A. Self-Regulatory Organization's Statement of the Purpose of, and Statutory Basis for, the Proposed Rule Change

Purpose—The Exchange proposes to adopt modified rules related to Qualified Contingent Cross Orders ("QCC"). The Exchange first proposed the adoption of the QCC in conjunction with the effectiveness of the Order Protection and Locked/Crossed Market Plan ("Distributive Linkage Plan") [4] and the Exchange's rules to implement the distributive linkage ("Distributive Linkage Rules").[5] After a full notice and comment period,[6] the Commission's Division of Trading and Markets ("Division") approved the proposal on behalf of the Commission by delegated authority.[7] However, this approval was automatically stayed by a petition submitted by the Chicago Board Options Exchange, Incorporated ("CBOE") requesting review of the filing by the full Commission.[8]

The Exchange has submitted extensive support for the approval of the QCC by the Division and the Commission,[9] and believes that it has fully addressed all of the issues raised by the commenters and provided the basis needed for the Commission to affirm the Division's approval of QCC. Nevertheless, the Commission has not taken action on the petition, and as a result of the stay, the Exchange has been at an extreme competitive disadvantage since the adoption of the Distributive Linkage Rules nearly one year ago. While the Exchange continues to believe QCC as originally approved by the Division is consistent with the Exchange Act, the Exchange believes this modified proposal addresses the two primary concerns raised by commenters. Specifically, this modified QCC proposal does not permit a QCC to be executed at the same price as a priority customer order on the Exchange and increases the required minimum size from 500 to 1000 contracts.[10]

Background

The Distributive Linkage Plan replaced the Plan for the Purpose of Creating and Operating an Intermarket Option Linkage ("Old Linkage Plan"), and the Exchange's Linkage Rules replaced the existing ISE rules implementing the Old Plan (the "Old Linkage Rules"). The Old Linkage Plan and the Old Linkage Rules provided a limited Trade-Through exemption for "Block Trades," defined to be trades of 500 or more contracts with a premium value of at least $150,000.[11] However, as with Regulation NMS, the Distributive Linkage Plan did not provide a Block Trade exemption. At the time that it adopted the Distributive Linkage Rules, the Exchange recognized that the loss of the Block Trade exemption would adversely affect the ability of ISE members to effect large trades that are tied to stock.[12] Thus, the Exchange proposed the QCC as a limited substitute for the Block Trade exemption, to be implemented contemporaneously with the Linkage Rules.[13]

[4] Securities Exchange Act Release No. 60405 (July 30, 2009), 74 FR 39362 (August 6, 2009).

[5] Securities Exchange Act Release No. 60559 (August 21, 2009), 74 FR 44425 (August 28, 2009) (Approval Order for SR–ISE–2009–27). *See* email from Michael Simon, Secretary and General Counsel, ISE, dated July 15, 2010, to Jennifer Colihan, Special Counsel, and Arisa Tinaves, Special Counsel, Division of Trading and Markets, Commission.

[6] Securities Exchange Act Release No. 60147 (June 19, 2009), 74 FR 30651 (June 26, 2009) (Notice for ISE–2009–35).

[7] Securities Exchange Act Release No. 60584 (August 28, 2009), 74 FR 45663 (September 3, 2009) (Approval Order for ISE–2009–35).

[8] Letter from Joanne Moffic-Silver, General Counsel and Corporate Secretary, CBOE, dated September 14, 2009.

[9] The ISE submitted a letter that addressed comments received by the Commission prior to the approval of the proposal. Letter from Michael J. Simon, Secretary and General Counsel, ISE, dated August 20, 2009. The ISE also submitted two briefs in support of a motion to lift the automatic stay that was imposed by the petition for review. Brief in Support of International Securities Exchange, LLC's Motion to Lift the Commission Rule 431(e) Automatic Stay of Delegated Action Triggered by Chicago Board Options Exchange, Incorporated's Notice of Intention to petition for Review, September 11, 2009; and Reply Brief in Support of International Securities Exchange, LLC's Motion to Lift the Commission Rule 431(e) Automatic Stay of Delegated Action Triggered by Chicago Board Options Exchange, Incorporated's Notice of Intention to petition for Review, September 22, 2009. Since denial of the Exchange's motion to lift the automatic stay, the Exchange has submitted additional support for QCC. Letters from Michael J. Simon, Secretary and General Counsel, ISE, dated December 3, 2009, December 16, 2009, March 1, 2010 and April 7, 2010. We incorporate by reference these submissions into this file number SR–ISE–2010–73.

[10] Under ISE Rule 100(37A), a priority customer is a person or entity that (i) is not a broker or dealer in securities, and (ii) does not place more than 390 orders in listed options per day on average during a calendar month for its own beneficial account(s). Pursuant to ISE Rule 713, priority customer orders are executed before other trading interest at the same price. *See* email from Michael Simon, Secretary and General Counsel, ISE, dated July 15, 2010, to Jennifer Colihan, Special Counsel, and Arisa Tinaves, Special Counsel, Division of Trading and Markets, Commission.

[11] Old Plan Sections 2(3) and 8(c)(i)(C); Old ISE Rule 1902(d)(2). *See* email from Michael Simon, Secretary and General Counsel, ISE, dated July 15, 2010, to Jennifer Colihan, Special Counsel, and Arisa Tinaves, Special Counsel, Division of Trading and Markets, Commission.

[12] Both the Old Plan and the Distributive Linkage Plan have a Trade-Through exemption for "Complex Trades," including options trades tied to stock. *See* Old Plan section 7(c)(iii)(G),and Plan section 5(b)(viii). However, and while not free from doubt, the common application of that exemption has been to apply it only to trades announced to exchange members as a single trade at a net price. As so interpreted, that exemption would cover only trades executed in the ISE's "Complex Order Mechanism." *See* ISE Rule 722.

[13] The Exchange asserted that the Qualified Contingent Cross Order was necessary to facilitate the execution of large stock/options combination orders. While broker-dealers could execute these orders in various ways, such as on the ISE's

Discussion

While Regulation NMS does not provide a Block Trade exemption from Trade-Through liability, the Commission, by order, has provided Trade-Through relief for "Qualified Contingent Trades" ("QCTs").[14] The QCT Release provides an exemption from Trade-Through liability in the equity market for multi-component, fully-hedged trades where one order is contingent on the execution of one or more additional orders. Building on this concept, we propose that when an ISE member effects a QCT trade in a Regulation NMS Stock that the member be permitted to cross the options leg of the trade on the ISE immediately upon entry if the order is for at least 1000 contracts, is part of a QCT,[15]is executed at a price at least equal to the national best bid or offer ("NBBO"), and there are no priority customer orders on the Exchange's book at the same price.

The QCC addresses the dislocation resulting from elimination of the Block Trade exemption by permitting members to provide their customers a net price for the entire trade, and then allowing the members to execute the options leg of the trade on the ISE at a price at least equal to the NBBO while using the QCT exemption to effect the trade in the equities leg at a price necessary to achieve the net price. Under the proposal, ISE will not permit the options component of a stock-option order to trade through the national best bid and offer ("NBBO").[16] Because the equity component of a stock-option order can be executed at any price under the QCT exemption from Regulation NMS, the pricing of the options component can be flexible. Indeed, whether the options component is executed at or between the ISE BBO is not material because, in most cases, the stock trade can be executed at a price that achieves the desired net price.[17] However, there are times when the quotation spread for the option on the ISE would not permit an execution of the options component between the ISE BBO, particularly in options that trade in increments greater than $0.01. In those cases, ISE proposes to permit an execution of the options component at a price that matches the ISE BBO.[18] Moreover, under the modified proposal, ISE will not permit the execution of a QCC at the same price as a priority customer order. In such a case, the QCC will be rejected.[19]

The ISE's proposal addresses the mechanics of executing the stock and options components of a net-price transaction in disparate markets with different execution rules, different trading increments and different intermarket trade-through provisions. On balance, we believe that providing members with the certainty that they could execute the options legs of the large complex orders for their customers, coupled with the flexibility members would have with respect to the price at which the equity legs are executed, would provide customers with the flexibility needed to achieve their investment objectives. Moreover, the modifications to the proposal to prevent the execution of a QCC if there is a priority customer on the book and to increase the minimum size of a QCC remove the appearance that such orders are trading-ahead of priority customer orders or that the QCC could be used to disadvantage retail customers, the two most significant issues raised by commenters on the initial proposal.[20]

Basis—The basis under the Act for this proposed rule change is the requirement under Section 6(b)(5) that an exchange have rules that are designed to prevent fraudulent and manipulative acts and practices, to promote just and equitable principles of trade, to remove impediments to and perfect the mechanism for a free and open market and a national market system, and, in general, to protect investors and the public interest. In particular, the proposed changes to QCC will prevent executions from occurring when there is a priority customer order on the book at the same price and will assure that only large-size orders (i.e., of at least 1000 contracts) are eligible. The modified rules will facilitate the ability of ISE members to execute large options orders that are tied to stock in an efficient manner, while also protecting the national market system against trade-throughs.

B. Self-Regulatory Organization's Statement on Burden on Competition

This proposed rule change does not impose any burden on competition. Rather, approval of QCC as modified by the proposed rule change, will address a significant existing burden on competition. In particular, it will permit fair competition between floor-based and electronic options exchanges for large-size stock-option orders.[21]

C. Self-Regulatory Organization's Statement on Comments on the Proposed Rule Change Received From Members, Participants or Others

The Exchange has not solicited, and does not intend to solicit, comments on this proposed rule change. The Exchange has not received any

complex order book, they often seek the flexibility to execute the various legs of such orders in different markets, and may seek to execute the options leg alone on the ISE. Under the Distributive Linkage Plan, and without a Block Trade exemption, the Exchange knew it would be extremely difficult for ISE members to effect the execution of the options leg on the ISE. This has proved to be true since the implementation of Distributive Linkage.

[14] Securities Exchange Act Release No. 57620 (April 4, 2008) (the "QCT Release"). That release superseded a release initially granting the Qualified Contingent Trade exemption. Securities Exchange Act Release No. 54389 (August 31, 2006).

[15] We propose to define a QCC trade substantively identical to the Commission's definition in the QCT release. A QCC trade must meet the following conditions: (i) At least one component must be an NMS Stock; (ii) all the components must be effected with a product price contingency that either has been agreed to by all the respective counterparties or arranged for by a broker-dealer as principal or agent; (iii) the execution of one component must be contingent upon the execution of all other components at or near the same time; (iv) the specific relationship between the component orders (*e.g.,* the spread between the prices of the component orders) must be determined by the time the contingent order is placed; (v) the component orders must bear a derivative relationship to one another, represent different classes of shares of the same issuer, or involve the securities of participants in mergers or with intentions to merge that have been announced or cancelled; and (iv) the transaction must be fully hedged (without regard to any prior existing position) as a result of other components of the contingent trade. Consistent with the QCT Release members must demonstrate that the transaction is fully hedged using reasonable risk-valuation methodologies. *See* QCT Release, *supra* note 14, at footnote 9.

[16] While the QCC does not provide exposure for price improvement for the options leg of a stock-option order, the options leg must be executed at the NBBO or better. The Commission has previously approved crossing transactions with no opportunity for price improvement. *See, e.g.,* ISE Rule 721(a); and CBOE Rule 6.74A, Interpretations and Policies .08.

[17] For example, assume two parties negotiate a stock-option order to buy 100,000 shares and sell 1,000 calls with a net price of 24.38. Further assume that the NBBO for the option is $0.82 by $0.86, and that the NBBO for the stock is $25.20 by $25.21. The broker sends an order to the ISE to execute the options component at $0.85 and sends the equity component to an equities marketplace at $25.33. Note that in this example there is a range of prices at which the price of the components could be executed between the NBBO for the option, *e.g.,* the options component could be executed at $0.83, $0.84 or $0.85, and the equity component could be executed respectively at $25.31, $25.32, or $25.33.

[18] Continuing with the example from note 17 above, assume that the NBBO and ISE BBO for the option is $0.85 by $0.86. According to the CBOE's letter, the contingent trade should not be permitted because the spread in the option is at a minimum increment.

[19] The Commission has previously approved the rejection of crossing transactions when there is a priority customer order on the book at the same price. *See, e.g.,* ISE Rule 721(a); and CBOE Rule 6.74A, Interpretations and Policies .08.

[20] *See infra* note 22.

[21] ISE has submitted numerous letters detailing how the loss of the Block Exemption without the alternative QCC has made it virtually impossible for our all-electronic exchange to compete with the floor-based trading models for these large-size stock-option orders. *Supra* note 9.

unsolicited written comments from members or other interested parties.[22]

III. Date of Effectiveness of the Proposed Rule Change and Timing for Commission Action

Within 35 days of the date of publication of this notice in the **Federal Register** or within such longer period (i) as the Commission may designate up to 90 days of such date if it finds such longer period to be appropriate and publishes its reasons for so finding or (ii) as to which the self-regulatory organization consents, the Commission will:

(a) By order approve such proposed rule change; or

(b) Institute proceedings to determine whether the proposed rule change should be disapproved.

IV. Solicitation of Comments

Interested persons are invited to submit written data, views, and arguments concerning the foregoing, including whether the proposed rule change is consistent with the Act. Comments may be submitted by any of the following methods:

Electronic Comments

- Use the Commission's Internet comment form *http://www.sec.gov/rules/sro.shtml);* or
- Send an E-mail to *rule-comments@sec.gov*. Please include File No. SR–ISE–2010–73 on the subject line.

Paper Comments

- Send paper comments in triplicate to Elizabeth M. Murphy, Secretary, Securities and Exchange Commission, 100 F Street, NE., Washington, DC 20549–1090.

All submissions should refer to File Number SR–ISE–2010–73. This file number should be included on the subject line if e-mail is used. To help the Commission process and review your comments more efficiently, please use only one method. The Commission will post all comments on the Commission's Internet Web site (*http://www.sec.gov/rules/sro.shtml).* Copies of the submission, all subsequent amendments, all written statements with respect to the proposed rule change that are filed with the Commission, and all written communications relating to the proposed rule change between the Commission and any person, other than those that may be withheld from the public in accordance with the provisions of 5 U.S.C. 552, will be available for website viewing and printing in the Commission's Public Reference Room on official business days between the hours of 10 a.m. and 3 p.m. Copies of such filing also will be available for inspection and copying at the principal office of the ISE. All comments received will be posted without change; the Commission does not edit personal identifying information from submissions. You should submit only information that you wish to make available publicly. All submissions should refer to File Number SR–ISE–2010–73 and should be submitted by August 9, 2010.

For the Commission, by the Division of Trading and Markets, pursuant to delegated authority.[23]

Florence E. Harmon,

Deputy Secretary.

[FR Doc. 2010–18069 Filed 7–22–10; 8:45 am]

BILLING CODE 8010–01–P

[22] The Commission received a number of comments with respect to SR–ISE–2009–35, *supra* note 6, which can be found at *http://www.sec.gov/comments/sr-ise-2009-35/ise200935.shtml#order*. The Commission also received comments with respect to the petition for full Commission review of SR–ISE–2009–35, *supra* note 6, which can be found at *http://www.sec.gov/rules/other/2009/sr-ise-2009-35/ise200935_statements.shtml*. ISE's responses to these comments, *supra* note 7, are included at these locations.

[23] 17 CFR 200.30–3(a)(12).

SECURITIES AND EXCHANGE COMMISSION

[Release No. 34–62517; File No. SR–EDGX–2010–07]

Self-Regulatory Organizations; EDGX Exchange, Inc.; Notice of Filing and Immediate Effectiveness of Proposed Rule Change To Amend EDGX Rule 11.14

July 16, 2010.

Pursuant to Section 19(b)(1) of the Securities Exchange Act of 1934 (the "Act"),[1] and Rule 19b–4 thereunder,[2] notice is hereby given that on July 13, 2010, the EDGX Exchange, Inc. (the "Exchange" or "self-regulatory organization" or the "EDGX") filed with the Securities and Exchange Commission ("Commission") the proposed rule change as described in Items I and II below, which items have been prepared by the self-regulatory organization. The Exchange has designated the proposed rule change as constituting a "non-controversial" rule change under paragraph (f)(6) of Rule 19b–4 under the Act,[3] which renders the proposal effective upon receipt of this filing by the Commission. The Commission is publishing this notice to solicit comments on the proposed rule change from interested persons.

I. Self-Regulatory Organization's Statement of the Terms of Substance of the Proposed Rule Change

The Exchange proposes to amend EDGX Rule 11.14 regarding Trading Halts Due to Extraordinary Market Volatility to make a technical amendment to the rule text. The text of the proposed rule change is available on the Exchange's Internet website at *http://www.directedge.com*, at the principal office of the Exchange, the Commission's Web site at *http://www.sec.gov,* and at the Commission's Public Reference Room.

II. Self-Regulatory Organization's Statement of the Purpose of, and Statutory Basis for, the Proposed Rule Change

In its filing with the Commission, the self-regulatory organization included statements concerning the purpose of, and basis for, the proposed rule change and discussed any comments it received on the proposed rule change. The text of these statements may be examined at the places specified in Item IV below. The self-regulatory organization has prepared summaries, set forth in sections A, B and C below, of the most significant aspects of such statements.

A. Self-Regulatory Organization's Statement of the Purpose of, and Statutory Basis for, the Proposed Rule Change

1. Purpose

The Exchange recently amended EDGX Rule 11.14 (Trading Halts Due to Extraordinary Market Volatility) to allow the Exchange to pause trading in an individual stock when the primary listing market for such stock issues a trading pause in any Circuit Breaker Securities, as defined in Interpretation and Policy .05 to Rule 11.14. The primary listing markets for U.S. stocks amended their rules so that they may, from time to time, issue a trading pause for an individual security if the price of such security moves 10% or more from a sale in a preceding five-minute period. Amendments to Rule 11.14 were approved by the Commission on June 10, 2010.[4] The Exchange subsequently filed to amend Rule 11.14 to add additional Circuit Breaker Securities, including those in the Russell 1000® Index ("Russell 1000") and specified

[1] 15 U.S.C. 78s(b)(1).

[2] 17 CFR 240.19b–4.

[3] 17 CFR 240.19b–4(f)(6).

[4] *See* Securities Exchange Act Release No. 62252 (June 10, 2010) (SR–EDGX–2010–01).

Exchange Traded Products ("ETP") to the pilot rule.[5]

The Exchange now proposes to make a technical amendment to EDGX Rule 11.14 to clarify that on the occurrence of any trading halt under Rule 11.14, only outstanding Post Only orders (as defined in Rule 11.5(c)(5)) in the system will be cancelled. Currently, Rule 11.14 states that all outstanding orders in the system will be cancelled. This amendment is necessary to comport the rule with how the Exchange's systems operate. In addition, the Exchange believes that a narrower cancellation policy will facilitate the formation of additional liquidity for the halted security, thus increasing price stability upon the reopening following the halt.

2. Statutory Basis

The statutory basis for the proposed rule change is Section 6(b)(5) of the Act,[6] which requires the rules of an exchange to promote just and equitable principles of trade, to remove impediments to and perfect the mechanism of a free and open market and a national market system and, in general, to protect investors and the public interest. The proposed rule change also is designed to support the principles of Section 11A(a)(1)[7] of the Act in that it seeks to assure fair competition among brokers and dealers and among exchange markets. The Exchange believes that the proposed rule meets these requirements in that it seeks to promote transparency for how order flow will be handled during a trading pause.

B. Self-Regulatory Organization's Statement on Burden on Competition

The proposed rule change does not impose any burden on competition that is not necessary or appropriate in furtherance of the purposes of the Act.

C. Self-Regulatory Organization's Statement on Comments on the Proposed Rule Change Received From Members, Participants, or Others

The Exchange has not solicited, and does not intend to solicit, comments on this proposed rule change. The Exchange has not received any unsolicited written comments from members or other interested parties.

III. Date of Effectiveness of the Proposed Rule Change and Timing for Commission Action

Because the foregoing proposed rule change does not:

(i) Significantly affect the protection of investors or the public interest;

(ii) Impose any significant burden on competition; and

(iii) Become operative for 30 days from the date on which it was filed, or such shorter time as the Commission may designate, if consistent with the protection of investors and the public interest, it has become effective pursuant to Section 19(b)(3)(A) of the Act[8] and Rule 19b–4(f)(6) thereunder.[9]

A proposed rule change filed under Rule 19b–4(f)(6)[10] normally does not become operative prior to 30 days after the date of the filing. However, pursuant to Rule 19b–4(f)(6)(iii),[11] the Commission may designate a shorter time if such action is consistent with the protection of investors and the public interest. The Exchange has asked the Commission to waive the 30-day operative delay so that the proposal may become operative upon filing. The Exchange believes that this rule filing should become effective upon filing to ensure transparency in the U.S. equities markets for how order flow will be handled during a trading pause under Rule 11.14. Because the filing clarifies how order flow will be handled during a trading pause, the Commission believes it is consistent with the protection of investors and the public interest to waive the 30-day operative delay and hereby grants such waiver.[12] Accordingly, the Commission designates the proposed rule change operative upon filing with the Commission.

At any time within 60 days of the filing of the proposed rule change, the Commission may summarily abrogate such rule change if it appears to the Commission that such action is necessary or appropriate in the public interest, for the protection of investors, or otherwise in furtherance of the purposes of the Act.

IV. Solicitation of Comments

Interested persons are invited to submit written data, views, and arguments concerning the foregoing, including whether the proposed rule change is consistent with the Act. Comments may be submitted by any of the following methods:

Electronic Comments

- Use the Commission's Internet comment form (*http://www.sec.gov/rules/sro.shtml*); or
- Send an e-mail to *rule-comments@sec.gov*. Please include File Number SR–EDGX–2010–07 on the subject line.

Paper Comments

- Send paper comments in triplicate to Elizabeth M. Murphy, Secretary, Securities and Exchange Commission, 100 F Street, NE., Washington, DC 20549–1090.

All submissions should refer to File Number SR–EDGX–2010–07. This file number should be included on the subject line if e-mail is used. To help the Commission process and review your comments more efficiently, please use only one method. The Commission will post all comments on the Commission's Internet Web site (*http://www.sec.gov/rules/sro.shtml*). Copies of the submission, all subsequent amendments, all written statements with respect to the proposed rule change that are filed with the Commission, and all written communications relating to the proposed rule change between the Commission and any person, other than those that may be withheld from the public in accordance with the provisions of 5 U.S.C. 552, will be available for Web site viewing and printing in the Commission's Public Reference Room on official business days between the hours of 10 a.m. and 3 p.m. Copies of such filing also will be available for inspection and copying at the principal office of the Exchange. All comments received will be posted without change; the Commission does not edit personal identifying information from submissions. You should submit only information that you wish to make available publicly. All submissions should refer to File Number SR–EDGX–2010–07 and should be submitted on or before August 13, 2010.

For the Commission, by the Division of Trading and Markets, pursuant to delegated authority.[13]

Florence E. Harmon,

Deputy Secretary.

[FR Doc. 2010–18068 Filed 7–22–10; 8:45 am]

BILLING CODE 8010–01–P

[5] *See* Securities Exchange Act Release No. 62418 (June 30, 2010) (SR–EDGX–2010–05).

[6] 15 U.S.C. 78f(b)(5).

[7] 15 U.S.C. 78k 1(a)(1).

[8] 15 U.S.C. 78s(b)(3)(A).

[9] 17 CFR 240.19b–4(f)(6). In addition, Rule 19b–4(f)(6)(iii) requires the self-regulatory organization to submit to the Commission written notice of its intent to file the proposed rule change, along with a brief description and text of the proposed rule change, at least five business days prior to the date of filing of the proposed rule change, or such shorter time as designated by the Commission. The Exchange has satisfied this requirement.

[10] 17 CFR 240.19b–4(f)(6).

[11] 17 CFR 240.19b–4(f)(6)(iii).

[12] For purposes only of waiving the 30-day operative delay of this proposal, the Commission has considered the proposed rule's impact on efficiency, competition, and capital formation. *See* 15 U.S.C. 78c(f).

[13] 17 CFR 200.30–3(a)(12).

SECURITIES AND EXCHANGE COMMISSION

[Release No. 34–62516; File No. SR–EDGA–2010–07]

Self-Regulatory Organizations; EDGA Exchange, Inc.; Notice of Filing and Immediate Effectiveness of Proposed Rule Change to Amend EDGA Rule 11.14

July 16, 2010.

Pursuant to Section 19(b)(1) of the Securities Exchange Act of 1934 (the "Act"),[1] and Rule 19b–4 thereunder,[2] notice is hereby given that on July 13, 2010, the EDGA Exchange, Inc. (the "Exchange" or "self-regulatory organization" or the "EDGA") filed with the Securities and Exchange Commission ("Commission") the proposed rule change as described in Items I and II below, which items have been prepared by the self-regulatory organization. The Exchange has designated the proposed rule change as constituting a "non-controversial" rule change under paragraph (f)(6) of Rule 19b–4 under the Act,[3] which renders the proposal effective upon receipt of this filing by the Commission. The Commission is publishing this notice to solicit comments on the proposed rule change from interested persons.

I. Self-Regulatory Organization's Statement of the Terms of Substance of the Proposed Rule Change

The Exchange proposes to amend EDGA Rule 11.14 regarding Trading Halts Due to Extraordinary Market Volatility to make a technical amendment to the rule text. The text of the proposed rule change is available on the Exchange's Internet Web site at *http://www.directedge.com*, at the principal office of the Exchange, the Commission's Web site at *http://www.sec.gov*, and at the Commission's Public Reference Room.

II. Self-Regulatory Organization's Statement of the Purpose of, and Statutory Basis for, the Proposed Rule Change

In its filing with the Commission, the self-regulatory organization included statements concerning the purpose of, and basis for, the proposed rule change and discussed any comments it received on the proposed rule change. The text of these statements may be examined at the places specified in Item IV below. The self-regulatory organization has prepared summaries, set forth in sections A, B and C below, of the most significant aspects of such statements.

A. Self-Regulatory Organization's Statement of the Purpose of, and Statutory Basis for, the Proposed Rule Change

1. Purpose

The Exchange recently amended EDGA Rule 11.14 (Trading Halts Due to Extraordinary Market Volatility) to allow the Exchange to pause trading in an individual stock when the primary listing market for such stock issues a trading pause in any Circuit Breaker Securities, as defined in Interpretation and Policy .05 to Rule 11.14. The primary listing markets for U.S. stocks amended their rules so that they may, from time to time, issue a trading pause for an individual security if the price of such security moves 10% or more from a sale in a preceding five-minute period. Amendments to Rule 11.14 were approved by the Commission on June 10, 2010.[4] The Exchange subsequently filed to amend Rule 11.14 to add additional Circuit Breaker Securities, including those in the Russell 1000® Index ("Russell 1000") and specified Exchange Traded Products ("ETP") to the pilot rule.[5]

The Exchange now proposes to make a technical amendment to EDGA Rule 11.14 to clarify that on the occurrence of any trading halt under Rule 11.14, only outstanding Post Only orders (as defined in Rule 11.5(c)(5)) in the system will be cancelled. Currently, Rule 11.14 states that all outstanding orders in the system will be cancelled. This amendment is necessary to comport the rule with how the Exchange's systems operate. In addition, the Exchange believes that a narrower cancellation policy will facilitate the formation of additional liquidity for the halted security, thus increasing price stability upon the reopening following the halt.

2. Statutory Basis

The statutory basis for the proposed rule change is Section 6(b)(5) of the Act,[6] which requires the rules of an exchange to promote just and equitable principles of trade, to remove impediments to and perfect the mechanism of a free and open market and a national market system and, in general, to protect investors and the public interest. The proposed rule change also is designed to support the principles of Section 11A(a)(1)[7] of the Act in that it seeks to assure fair competition among brokers and dealers and among exchange markets. The Exchange believes that the proposed rule meets these requirements in that it seeks to promote transparency for how order flow will be handled during a trading pause.

B. Self-Regulatory Organization's Statement on Burden on Competition

The proposed rule change does not impose any burden on competition that is not necessary or appropriate in furtherance of the purposes of the Act.

C. Self-Regulatory Organization's Statement on Comments on the Proposed Rule Change Received From Members, Participants, or Others

The Exchange has not solicited, and does not intend to solicit, comments on this proposed rule change. The Exchange has not received any unsolicited written comments from members or other interested parties.

III. Date of Effectiveness of the Proposed Rule Change and Timing for Commission Action

Because the foregoing proposed rule change does not:

(i) Significantly affect the protection of investors or the public interest;

(ii) Impose any significant burden on competition; and

(iii) Become operative for 30 days from the date on which it was filed, or such shorter time as the Commission may designate, if consistent with the protection of investors and the public interest, it has become effective pursuant to Section 19(b)(3)(A) of the Act[8] and Rule 19b–4(f)(6) thereunder.[9]

A proposed rule change filed under Rule 19b–4(f)(6)[10] normally does not become operative prior to 30 days after the date of the filing. However, pursuant to Rule 19b–4(f)(6)(iii),[11] the Commission may designate a shorter time if such action is consistent with the protection of investors and the public interest. The Exchange has asked the Commission to waive the 30-day operative delay so that the proposal may become operative upon filing. The

[1] 15 U.S.C. 78s(b)(1).

[2] 17 CFR 240.19b–4.

[3] 17 CFR 240.19b–4(f)(6).

[4] *See* Securities Exchange Act Release No. 62252 (June 10, 2010) (SR–EDGA–2010–01).

[5] *See* Securities Exchange Act Release No. 62417 (June 30, 2010) (SR–EDGA–2010–05).

[6] 15 U.S.C. 78f(b)(5).

[7] 15 U.S.C. 78k–1(a)(1).

[8] 15 U.S.C. 78s(b)(3)(A).

[9] 17 CFR 240.19b–4(f)(6). In addition, Rule 19b–4(f)(6)(iii) requires the self-regulatory organization to submit to the Commission written notice of its intent to file the proposed rule change, along with a brief description and text of the proposed rule change, at least five business days prior to the date of filing of the proposed rule change, or such shorter time as designated by the Commission. The Exchange has satisfied this requirement.

[10] 17 CFR 240.19b–4(f)(6).

[11] 17 CFR 240.19b–4(f)(6)(iii).

Exchange believes that this rule filing should become effective upon filing to ensure transparency in the U.S. equities markets for how order flow will be handled during a trading pause under Rule 11.14. Because the filing clarifies how order flow will be handled during a trading pause, the Commission believes it is consistent with the protection of investors and the public interest to waive the 30-day operative delay and hereby grants such waiver.[12] Accordingly, the Commission designates the proposed rule change operative upon filing with the Commission.

At any time within 60 days of the filing of the proposed rule change, the Commission may summarily abrogate such rule change if it appears to the Commission that such action is necessary or appropriate in the public interest, for the protection of investors, or otherwise in furtherance of the purposes of the Act.

IV. Solicitation of Comments

Interested persons are invited to submit written data, views, and arguments concerning the foregoing, including whether the proposed rule change is consistent with the Act. Comments may be submitted by any of the following methods:

Electronic Comments

- Use the Commission's Internet comment form (*http://www.sec.gov/rules/sro.shtml*); or
- Send an e-mail to *rule-comments@sec.gov*. Please include File Number SR–EDGA–2010–07 on the subject line.

Paper Comments

- Send paper comments in triplicate to Elizabeth M. Murphy, Secretary, Securities and Exchange Commission, 100 F Street, NE., Washington, DC 20549–1090.

All submissions should refer to File Number SR–EDGA–2010–07. This file number should be included on the subject line if e-mail is used. To help the Commission process and review your comments more efficiently, please use only one method. The Commission will post all comments on the Commission's Internet Web site (*http://www.sec.gov/rules/sro.shtml*). Copies of the submission, all subsequent amendments, all written statements with respect to the proposed rule change that are filed with the Commission, and all written communications relating to the proposed rule change between the Commission and any person, other than those that may be withheld from the public in accordance with the provisions of 5 U.S.C. 552, will be available for Web site viewing and printing in the Commission's Public Reference Room on official business days between the hours of 10 a.m. and 3 p.m. Copies of such filing also will be available for inspection and copying at the principal office of the Exchange. All comments received will be posted without change; the Commission does not edit personal identifying information from submissions. You should submit only information that you wish to make available publicly. All submissions should refer to File Number SR–EDGA–2010–07 and should be submitted on or before August 13, 2010.

For the Commission, by the Division of Trading and Markets, pursuant to delegated authority.[13]

Florence E. Harmon,

Deputy Secretary.

[FR Doc. 2010–18067 Filed 7–22–10; 8:45 am]

BILLING CODE 8010–01–P

[12] For purposes only of waiving the 30-day operative delay of this proposal, the Commission has considered the proposed rule's impact on efficiency, competition, and capital formation. *See* 15 U.S.C. 78c(f).

[13] 17 CFR 200.30–3(a)(12).

SECURITIES AND EXCHANGE COMMISSION

[Release No. 34–62524; File No. SR–BATS–2010–008]

Self-Regulatory Organizations; BATS Exchange, Inc.; Order Approving Proposed Rule Change, as Modified by Amendment No. 1 Thereto, To Amend BATS Rules 2.5 and 17.2 To Establish a Registration Requirement for Principals

July 16, 2010.

I. Introduction

On April 9, 2010, BATS Exchange, Inc. ("BATS" or "Exchange") filed with the Securities and Exchange Commission ("Commission"), pursuant to Section 19(b)(1) of the Securities Exchange Act of 1934 ("Act") [1] and Rule 19b–4 thereunder,[2] a proposed rule change to amend its registration requirements in Rules 2.5 and 17.2. The proposed rule change was published for comment in the **Federal Register** on April 29, 2010.[3] The Commission received one comment letter on the proposal.[4] The Exchange responded on June 29, 2010.[5] On June 30, 2010, the Exchange submitted Amendment No. 1 to the proposed rule change.[6] This order approves the proposed rule change as modified by Amendment No. 1.

II. Description of the Proposal

BATS proposes to amend BATS Rule 2.5, entitled "Restrictions," to require each Exchange member to register with the Exchange: (i) At least two principals to supervise Authorized Traders of the member (subject to certain exceptions), one of whom must be the member's chief compliance officer, and (ii) at least one financial and operations principal.[7]

BATS Rule 2.5

BATS Rule 2.5 states that the General Securities Representative exam ("Series 7") is required for registration with the Exchange as an Authorized Trader. The term "Authorized Trader" is defined as "a person who may submit orders (or who supervises a routing engine that may automatically submit orders) to the Exchange's trading facilities on behalf of his or her member or sponsored participant." Accordingly, all traders that participate in the routing of orders to the Exchange, including proprietary traders, are required to be registered with the Exchange and Series 7 qualified. The term Authorized Trader includes a trader that submits orders, or supervises a routing engine that automatically submits orders, to the Exchange's equities platform, options platform, or both.

With this rule change, BATS proposes to require each member to register with the Exchange at least two principals qualified as General Securities Principals [8] ("Series 24") (subject to certain exceptions) to supervise the member's Authorized Traders and one principal qualified as a Limited Principal—Financial and Operations ("Series 27") to supervise the financial and operational activities of the member ("FINOP"). In addition, the proposal would require each chief compliance officer designated on Schedule A of

[1] 15 U.S.C. 78s(b)(1).

[2] 17 CFR 240.19b–4.

[3] *See* Securities Exchange Act Release No. 61960 (April 22, 2010), 75 FR 22668.

[4] *See* letter from Joan C. Conley, Senior Vice President and Corporate Secretary, Nasdaq OMX, to Elizabeth M. Murphy, Secretary, Commission, dated May 20, 2010 ("Nasdaq Comment Letter").

[5] *See* letter from Eric J. Swanson, Senior Vice President and General Counsel, BATS Exchange, Inc., to Elizabeth M. Murphy, Secretary, Commission, dated June 29, 2010 ("BATS Response Letter").

[6] Amendment No. 1 is a technical amendment and thus not subject to notice and comment.

[7] The Exchange also proposes a technical amendment to BATS Rule 17.2(g)(4) to eliminate language that will become unnecessary due to the changes to BATS Rule 2.5.

[8] In order to register as a principal, one must first be registered as a representative.

Form BD to register with the Exchange as a Series 24 qualified principal.[9]

BATS proposes certain exceptions to the requirements that a member register two Series 24 qualified principals and one Series 27 qualified principal. First, the Exchange proposes that any member with 25 or fewer Authorized Traders that meets the definition of a "proprietary trading firm," have at least one Series 24 registered principal. Second, under the proposed rule, the Exchange may waive the requirement to register two Series 24 qualified principals if the member can conclusively indicate that a waiver is warranted under the circumstances. With respect to the FINOP requirement, the Exchange may waive the requirement to register a Series 27 qualified FINOP if such registration is not required by the member's designated examining authority.[10]

BATS Rule 17.2

Any member that conducts business on the Exchange as an Options Member is required by BATS Rules 17.1(b) and 17.2(g) to register an Options Principal with the Exchange who is responsible for that Member's options related activities on the Exchange. The Options Principal must qualify by passing the Registered Options Principal exam ("Series 4"). Accordingly, the proposed rule makes clear that paragraph (d) does not apply to a member that solely conducts business on the Exchange as an Options Member, and thus, that such a member is not also required to register Series 24 qualified principals with the Exchange.

In addition to adopting the principal registration requirements described above, the Exchange proposes modifications to Interpretation and Policy .02, which currently requires Authorized Traders to complete continuing education requirements similar to those required by other national securities exchanges. Due to the addition of the principal registration requirements described above and the recent addition of an options principal requirement, the Exchange proposes to clarify that all Authorized Traders, principals, financial/operations principals and options principals are subject to continuing education requirements in order to maintain registration with the Exchange.[11]

Deadline for Compliance

The Exchange has proposed a compliance date of September 30, 2010.

III. Comment Letter and BATS's Response

The Commission received one comment letter on the proposed rule change.[12] The commenter believed that BATS's requirement to register Authorized Traders is narrower than FINRA Rule 1031 which addresses registration of representatives. The commenter expressed concern that BATS's registration requirements for Authorized Traders excepted other associated persons that FINRA requires to be registered, and that only those persons supervising Authorized Traders would be required to register as a principal. The commenter also questioned BATS's requirement to register at least one FINOP, citing FINRA Rule 1022(b) which requires any person with a FINOP's responsibilities to register, including the chief financial officer.

In the BATS Response Letter,[13] BATS explained that its registration rules, in particular, were tailored to ensure the qualification and competence of individuals responsible for sending orders to BATS and their supervisors. However, BATS stated that its rules, overall, apply to its members and their associated persons, not just Authorized Traders and those supervising them. In addition, BATS explained that, under its proposed rule, a FINOP is responsible for ensuring that a member firm complies with applicable financial and operational requirements, including those relating to the submission of financial reports and the maintenance of books and records. BATS stated that it is not requiring the chief financial officer to assume this responsibility as this person may not be the best person suited to be a FINOP, and is instead allowing the member firm to decide who needs to be registered as a FINOP.

The Commission believes it is reasonable for BATS to limit the application of its registration, examination, and continuing education requirements to those associated persons who conduct a securities business through BATS or who supervise such activity. BATS has represented that the scope of these requirements encompasses all associated persons entering orders at BATS, which the Commission believes provides appropriate breadth of coverage.

IV. Discussion and Commission Findings

The Commission finds that the proposed rule change is consistent with the requirements of the Act and the rules and regulations thereunder applicable to a national securities exchange.[14] Specifically, the Commission finds that the proposal is consistent with Section 6(b)(5) of the Act,[15] which requires, among other things, that the rules of a national securities exchange be designed to prevent fraudulent and manipulative acts and practices, to promote just and equitable principles of trade, to remove impediments to, and perfect the mechanism of, a free and open market and a national market system and, in general, to protect investors and the public interest. The Commission believes that the proposed rule change is also consistent with Section 6(c)(3)(B) of the Act,[16] which authorizes exchanges to prescribe standards of training, experience and competence for persons associated with exchange members, and gives exchanges the authority to bar a natural person from becoming a member or a person associated with a member, if the person does not meet the standards of training, experience and competence prescribed in the rules of the exchange. The Commission believes that the changes proposed by BATS to its rules will enhance the ability of member firms to comply with the Exchange's rules as well as with the Federal Securities laws.

Specifically, broker-dealers are required to supervise the activities of their associated persons.[17] The associated persons of broker-dealers must register with the exchanges. Broker-dealers and exchanges have responsibilities under the Act with respect to statutorily disqualified

[9] In Amendment No. 1, the Exchange amended this portion of its rule to more closely mirror the rules of other SROs that require the chief compliance officers of their members to be registered. *See, e.g.,* NASDAQ Rule 1022(a); NASDAQ BX Rule 1022(a); FINRA Rule 1022(a); NYSE Arca Equities Rule 6.18(d). The amendment also deleted a definition of "customer" for purposes of proposed paragraph (g) that would have permitted a firm to have broker-dealer customers and still qualify as a "proprietary trading firm" for the purpose of the rule.

[10] BATS indicated that it did not want to independently require a member to have a FINOP. All members of BATS must be members of another SRO. *See* BATS Rule 2.5(4). The Commission understands that the vast majority of BATS members are also members of FINRA. All members of FINRA that are subject to Rule 15c3–1 under the Act must have a FINOP.

[11] The Exchange thus proposes to delete language from BATS Rule 17.2(g)(4) that states that an options principal is subject to continuing education requirements.

[12] *See supra* note 4.

[13] *See supra* note 5.

[14] In approving this proposed rule change, the Commission has considered the proposed rule's impact on efficiency, competition, and capital formation. *See* 15 U.S.C. 78c(f).

[15] 15 U.S.C. 78f(b)(5).

[16] 15 U.S.C. 78f(c)(3)(B).

[17] *See* Section 15(b)(4)(E) of the Act.

persons who seek to associate with a member firm.[18]

In order to meet its obligations under Section 6 of the Act [19] to enforce compliance by member firms and their associated persons with the Act, the rules thereunder, and the exchange's own rules, an exchange must have baseline registration and examination or qualification requirements for all persons conducting business on an exchange, as well as for those supervising such activity. In addition, most SROs have continuing education requirements for registered persons which help ensure that associated persons are up to date on changes to rules and regulations that govern their activities. Furthermore, an exchange must know if an associated person of a member firm is subject to a statutory disqualification.[20] This information is elicited by the Uniform Application for Securities Industry Registration or Transfer ("Form U4"), which is used by most exchanges and FINRA to register associated persons.

The Commission believes that the requirement that firms have a minimum of two principals responsible for oversight of Authorized Traders and activity on BATS who must be registered and pass the Series 24 exam should help BATS strengthen the regulation of its member firms. Requiring a minimum of two persons, both of whom meet specified proficiency standards, should help ensure that member firms have adequate supervision, and that those overseeing member firms are prepared for the responsibility. The nature of the firm, however, may dictate that more than two principals are needed to provide appropriate supervision. In addition, the Commission believes that requiring chief compliance officers and any employee operating in the capacity of a FINOP to register with the Exchange as principals and take either the Series 24 or Series 27, respectively, is appropriate based on the heightened level of accountability inherent in the duty of overseeing compliance by an Exchange member, and in the oversight and preparation of financial reports and the oversight of those employed in the financial and operational capacities at each firm.

The Commission believes BATS's proposed exceptions from the above requirements are appropriate. The Commission notes that a member seeking a waiver from BATS's FINOP requirement must prove that it has satisfied the financial and operational requirements of its designated examining authority applicable to registration.[21] Additionally, any member seeking an exception from BATS's requirement that each firm have two principals must provide evidence that conclusively indicates to the Exchange that only one principal is necessary. The Commission expects this authority to be used sparingly as principals are charged with oversight of the operations of member firms, and provide the first line of defense in ensuring that member firms are complying with the rules of the exchange as well as the federal securities laws.

Additionally, the Commission believes that the proposed rule change is consistent with the principles of Section 11A(a)(1) [22] of the Act in that it seeks to assure fair competition among brokers and dealers and among exchange markets. The Commission believes that the proposed rule will promote uniformity of regulation across markets, thus reducing opportunities for regulatory arbitrage. BATS' proposed rule change helps ensure that all persons conducting a securities business through BATS are appropriately supervised, as the Commission expects of all SROs. In addition, the exceptions to the general rules in BATS's proposed rule change are substantively the same as exceptions provided to similar rules at other SROs.

Finally, the Commission believes that the compliance date proposed by the Exchange of September 30, 2010 will provide the Exchange's members adequate time to pass any qualification examinations necessary to become compliant with the proposed rules.

VI. Conclusion

It is therefore ordered, pursuant to Section 19(b)(2) of the Act,[23] that the proposed rule change (SR–BATS–2010–008), as modified by Amendment No. 1, be, and hereby is, approved.

For the Commission, by the Division of Trading and Markets, pursuant to delegated authority.[24]

Florence E. Harmon,

Deputy Secretary.

[FR Doc. 2010–18037 Filed 7–22–10; 8:45 am]

BILLING CODE 8010–01–P

[18] *See* Section 6(c)(2) of the Act and Rule 19h–1 under the Act.

[19] Section 6 requires exchanges to have the ability to enforce compliance by their members and associated persons with the federal securities laws and with their own rules. 15 U.S.C. 78f.

[20] In addition, the Commission believes that it is important to ensure that information, such as whether an associated person is subject to a statutory disqualification, is available to exchanges and other regulators, including the Commission and the state securities regulators, through FINRA's Central Registration Depository System ("WebCRD") as well as members of the public through BrokerCheck, which derives information from WebCRD.

[21] *See* footnote 10 *infra.*

[22] 15 U.S.C. 78k–1(a)(1).

[23] 15 U.S.C. 78s(b)(2).

[24] 17 CFR 200.30–3(a)(12).

SECURITIES AND EXCHANGE COMMISSION

[Release No. 34–62518; File No. SR–Phlx-2010–90]

Self-Regulatory Organizations; NASDAQ OMX PHLX, Inc.; Notice of Filing and Immediate Effectiveness of Proposed Rule Change Relating to Complex Orders

July 16, 2010.

Pursuant to Section 19(b)(1) of the Securities Exchange Act of 1934 ("Act") [1] and Rule 19b–4 thereunder,[2] notice is hereby given that on June 28, 2010, NASDAQ OMX PHLX, Inc. ("Phlx" or "Exchange") filed with the Securities and Exchange Commission ("Commission") the proposed rule change as described in Items I, II, and III below, which Items have been prepared by the Exchange. The Commission is publishing this notice to solicit comments on the proposed rule change from interested persons.

I. Self-Regulatory Organization's Statement of the Terms of Substance of the Proposed Rule Change

The Exchange proposes [sic] amend its Section II equity options fees to: (i) Pay a $0.05 per contract side rebate to members for certain Customer complex orders [3]; and (ii) assess a $0.05 fee to Firms on the contra-side of a Customer complex order that have reached the maximum on the Firm Related Equity Option Cap.

While changes to the Exchange's Fee Schedule pursuant to this proposal are effective upon filing, the Exchange has designated this proposal to be effective

[1] 15 U.S.C. 78s(b)(1).

[2] 17 CFR 240.19b–4.

[3] A complex order is a spread, straddle, combination, ratio or collar order, all of which consist of more than one component, priced like a single order at a net debit or credit based on the prices of the individual components. *See* Exchange Rule 1080.08 Commentary .08(a)(i). In 2008, the Exchange automated the handling of complex orders on its electronic trading platform for options, PHLX XL. *See* Securities Exchange Act Release No. 58361 (August 14, 2008), 73 FR 49529 (August 21, 2008) (SR–Phlx-2008–50). Since that time, the Exchange has enhanced its options trading platform, now known as Phlx XL II. *See* Securities Exchange Act Release No. 59995 (May 28, 2009), 74 FR 26750 (June 3, 2009) (SR–Phlx-2009–32).

for trades settling on or after July 1, 2010.

The text of the proposed rule change is available on Phlx's Web site at *http://www.nasdaqtrader.com,* on the Commission's Web site at *http://www.sec.gov,* at Phlx, and at the Commission's Public Reference Room.

II. Self-Regulatory Organization's Statement of the Purpose of, and Statutory Basis for, the Proposed Rule Change

In its filing with the Commission, the Exchange included statements concerning the purpose of, and basis for, the proposed rule change and discussed any comments it received on the proposed rule change. The text of these statements may be examined at the places specified in Item IV below. The Exchange has prepared summaries, set forth in Sections A, B, and C below, of the most significant aspects of such statements.

A. Self-Regulatory Organization's Statement of the Purpose of, and Statutory Basis for, the Proposed Rule Change

1. Purpose

The purpose of the proposed rule change is to attract additional complex order business, specifically by amending the equity options fees to pay a $0.05 rebate per contract to members for Customer complex orders in equity options that are electronically [4] executed against a non-Customer contra-side [5] complex order or a non-Customer contra-side individual order or quote. Currently, members are assessed the equity options fees in Section II of the Fee Schedule for executing Customer complex orders that are electronically executed against non-Customer contra-side complex orders.[6] Now, instead of assessing a fee of $0.00 per contract, the Exchange is proposing to pay a $0.05 rebate. Similarly, the Exchange also proposes to pay a $0.05 rebate to members for Customer complex orders where the complex order is executed against or "legged" against individual non-Customer contra-side orders or quotes.

The Exchange would continue to assess other market participants the current equity options fees. The payment for order flow fees will continue to apply to complex order transactions. The Exchange believes that paying rebates for executing such Customer complex orders as described herein will increase the volume of complex orders that are executed on Phlx XL II.

The Exchange also proposes to assess a $0.05 per contract fee to Firms that: (i) Are on the contra-side of a Customer complex order; and (ii) have reached the maximum of the Firm Related Equity Option Cap. Currently, the Exchange has in place a Firm Related Equity Option Cap of $75,000. Firms are subject to this Firm Related Equity Option Cap per member organization for equity option transactions, in the aggregate, for one billing month.[7] The Exchange believes that assessing such a fee to Firms for transacting Customer complex orders, once that Firm has reached the maximum of the Firm Related Equity Option Cap, will help defray the cost of paying the $0.05 per contract rebate to Customers. For example, when a Firm exceeds the $75,000 Firm Related Equity Option Cap, a $0.05 per contract fee will be added to the Firm Related Equity Option Cap, over those trades that were counted in reaching the $75,000, when a Firm is contra to a Customer Complex Order. The Exchange proposes to amend the current language in the Fee Schedule, relating to equity option fees, concerning the Firm Related Equity Option Cap, to reflect the proposal and also amend the language to provide more clarity to the $75,000 cap.

While changes to the Exchange's Fee Schedule pursuant to this proposal are effective upon filing, the Exchange has designated this proposal to be effective for trades settling on or after July 1, 2010.

2. Statutory Basis

The Exchange believes that its proposal to amend its Fee Schedule is consistent with Section 6(b) of the Act [8] in general, and furthers the objectives of Section 6(b)(4) of the Act [9] in particular, in that it is an equitable allocation of reasonable fees and other charges among Exchange members.

The Exchange believes that paying a rebate to members for electronically-delivered complex orders is equitable because it is similar to rebates currently being paid by the International Stock Exchange LLC ("ISE") for select symbols.[10] By offering the $0.05 per contract rebate, the Exchange hopes to encourage more customer complex orders to be executed via Phlx XL. The $0.05 per contract rebate is reasonable because it is similar to rebates paid by other exchanges for customer orders.[11]

B. Self-Regulatory Organization's Statement on Burden on Competition

The Exchange does not believe that the proposed rule change will impose any burden on competition not necessary or appropriate in furtherance of the purposes of the Act.

C. Self-Regulatory Organization's Statement on Comments on the Proposed Rule Change Received From Members, Participants or Others

No written comments were either solicited or received.

III. Date of Effectiveness of the Proposed Rule Change and Timing for Commission Action

The foregoing rule change has become effective pursuant to Section 19(b)(3) of the Act [12] and Rule 19b–4(f)(2) [13] thereunder. At any time within 60 days of the filing of such proposed rule change, the Commission may summarily abrogate such rule change if it appears to the Commission that such action is necessary or appropriate in the public interest, for the protection of investors, or otherwise in furtherance of the purposes of the Act.

IV. Solicitation of Comments

Interested persons are invited to submit written data, views and arguments concerning the foregoing, including whether the proposed rule change is consistent with the Act. Comments may be submitted by any of the following methods:

[4] Complex Orders executed on the floor of the Exchange and not electronically executed are not subject to the $0.05 per contract rebate described in this proposal.

[5] This would be a complex order that is contra to an order from a specialist, Registered Options Trader (as defined in Exchange Rule 1014(b)(i) and (ii)), Streaming Quote Trader (as defined in Exchange Rule 1014(b)(ii)(A)), Remote Streaming Quote Specialist (as defined in Exchange Rule 1014(b)((ii)(B)), Professional (as defined in Exchange Rule 1000(b)(14)), Broker-Dealer or Firm. A complex order strategy means any Complex Order involving any option series which is priced at a net debit or credit (based on the relative prices of each component). The Exchange will calculate both a bid price and an offer price for each Complex Order Strategy based on the current PBBO (as defined below) [sic] for each component of the Complex Order and the bid/ask differential for each component. *See* Exchange Rule 1080, Commentary .08(a)(ii).

[6] The proposed rebate and fee do not apply to any of the symbols listed in Section 1, titled "Rebates for Adding and Fees for Removing Liquidity in Select Symbols."

[7] The exception to this is for orders of joint back-office participants. The equity options transaction charges are waived for firms executing facilitation orders pursuant to Exchange Rule 1064 when such members are trading in their own proprietary account.

[8] 15 U.S.C. 78f(b).

[9] 15 U.S.C. 78f(b)(4).

[10] *See* ISE's Schedule of Fees.

[11] *See* Securities Exchange Release Act. 59478 (February 27, 2009), 74 FR 9857 (March 6, 2009) (SR–NYSEALTR–2009–19).

[12] 15 U.S.C. 78s(b)(3).

[13] 17 CFR 240.19b–4(f)(2).

Electronic Comments

- Use the Commission's Internet comment form (*http://www.sec.gov/rules/sro.shtml*); or
- Send an e-mail to *rule-comments@sec.gov.* Please include File Number SR–Phlx–2010–90 on the subject line.

Paper Comments

- Send paper comments in triplicate to Elizabeth M. Murphy, Secretary, Securities and Exchange Commission, 100 F Street NE., Washington, DC 20549–1090.

All submissions should refer to File Number SR–Phlx-2010–90. This file number should be included on the subject line if e-mail is used. To help the Commission process and review your comments more efficiently, please use only one method. The Commission will post all comments on the Commission's Internet Web site (*http://www.sec.gov/rules/sro/shtml*). Copies of the submission, all subsequent amendments, all written statements with respect to the proposed rule change that are filed with the Commission, and all written communications relating to the proposed rule change between the Commission and any person, other than those that may be withheld from the public in accordance with the provisions of 5 U.S.C. 552, will be available for Web site viewing and printing in the Commission's Public Reference Room, 100 F Street, NE., Washington, DC 20549, on official business days between the hours of 10 a.m. and 3 p.m. Copies of such filing will also be available for inspection and copying at the principal office of the Exchange. All comments received will be posted without change; the Commission does not edit personal identifying information from submissions. You should submit only information that you wish to make available publicly. All submissions should refer to File No. SR–Phlx–2010–90 and should be submitted on or before August 13, 2010.

For the Commission, by the Division of Trading and Markets, pursuant to delegated authority.[14]

Florence E. Harmon,

Deputy Secretary.

[FR Doc. 2010–18036 Filed 7–22–10; 8:45 am]

BILLING CODE 8011–01–P

[14] 17 CFR 200.30–3(a)(12).

SECURITIES AND EXCHANGE COMMISSION

[Release No. 34–62513; File No. SR–ISE–2010–75]

Self-Regulatory Organizations; International Securities Exchange, LLC; Notice of Filing and Immediate Effectiveness of Proposed Rule Change Relating to the Extension of the Price Improvement Mechanism Pilot Program

July 16, 2010.

Pursuant to Section 19(b)(1) of the Securities Exchange Act of 1934 (the "Act"),[1] and Rule 19b–4 thereunder,[2] notice is hereby given that on July 14, 2010, the International Securities Exchange, LLC (the "Exchange" or "ISE") filed with the Securities and Exchange Commission ("Commission") the proposed rule change as described in Items I and II below, which Items have been prepared by the ISE. The ISE has designated the proposed rule change as a "non-controversial" rule change pursuant to Section 19(b)(3)(A) of the Act[3] and Rule 19b–4(f)(6) thereunder,[4] which renders the proposed rule change effective upon filing with the Commission. The Commission is publishing this notice to solicit comments on the proposed rule change from interested persons.

I. Self-Regulatory Organization's Statement of the Terms of Substance of the Proposed Rule Change

The Exchange is proposing to extend two pilot programs related to its Price Improvement Mechanism ("PIM"). The text of the proposed rule amendment is as follows, with proposed deletions in [brackets], and proposed additions in italics:

Rule 723. Price Improvement Mechanism for Crossing Transactions

* * * * *

Supplementary Material to Rule 723

.01–.02 No Change.

.03 Initially, and for at least a Pilot Period expiring on *July 18, 2011* [July 17, 2010], there will be no minimum size requirements for orders to be eligible for the Price Improvement Mechanism. During the Pilot Period, the Exchange will submit certain data, periodically as required by the Commission, to provide supporting evidence that, among other things, there is meaningful competition for all size orders within the Price Improvement Mechanism, that there is significant price improvement for all orders executed through the Price Improvement Mechanism, and that there is an active and liquid market functioning on the Exchange outside of the Price Improvement Mechanism. Any data which is submitted to the Commission will be provided on a confidential basis.

.04 No Change.

.05 Paragraphs (c)(5), (d)(5) and (d)(6) will be effective for a Pilot Period expiring on *July 18, 2011* [July 17, 2010]. During the Pilot Period, the Exchange will submit certain data relating to the frequency with which the exposure period is terminated by unrelated orders. Any data which is submitted to the Commission will be provided on a confidential basis.

.06–.07 No Change.

* * * * *

II. Self-Regulatory Organization's Statement of Purpose of, and Statutory Basis for, the Proposed Rule Change

In its filing with the Commission, the self-regulatory organization included statements concerning the purpose of, and basis for, the proposed rule change and discussed any comments it received on the proposed rule change. The text of these statements may be examined at the places specified in Item IV below. The self-regulatory organization has prepared summaries, set forth in Sections A, B, and C below, of the most significant aspects of such statements.

A. Self-Regulatory Organization's Statement of the Purpose of, and Statutory Basis for, the Proposed Rule Change

1. Purpose

The Exchange currently has two pilot programs related to its PIM.[5] The current pilot period provided in paragraphs .03 and .05 of the Supplementary Material to Rule 723 is set to expire on July 17, 2010.[6]

[1] 15 U.S.C. 78s(b)(1).

[2] 17 CFR 240.19b–4.

[3] 15 U.S.C. 78s(b)(3)(A).

[4] 17 CFR 240.19b–4(f)(6).

[5] *See* Securities Exchange Act Release Nos. 50819 (December 8, 2004), 69 FR 75093 (December 15, 2004) (Approving the PIM pilot (the "Approval Order")); 52027 (July 13, 2005), 70 FR 41804 (July 20, 2005) Notice of Filing and Immediate Effectiveness of Proposed Rule Change Relating to a One-Year Pilot Extension for the Price Improvement Mechanism); 54146 (July 14, 2006), 71 FR 41490 (July 21, 2006) (Notice of Filing and Immediate Effectiveness of Proposed Rule Change Relating to a One-Year Pilot Extension Until July 18, 2007 for the Price Improvement Mechanism); 56106 (July 19, 2007), 72 FR 40914 (July 25, 2007) (Notice of Filing and Immediate Effectiveness of Proposed Rule Change Relating to a One-Week Extension for the Price Improvement Mechanism Pilot Program); and[sic] 56156 (July 27, 2007), 72 FR 43305 (August 3, 2007) (Notice of Filing and Immediate Effectiveness of Proposed Rule Change Relating to an Extension for the Price Improvement Mechanism Pilot Program); and 58197 (July 18, 2008), 73 FR 43810 (July 28, 2008) (Notice of Filing and Immediate Effectiveness of Proposed Rule Change Relating to the Extension of the Price Improvement Mechanism Pilot Program).

[6] *See* Securities Exchange Act Release No. 60333 (July 17, 2009), 74 FR 36792 (July 24, 2009) (Notice

Continued

Paragraph .03 provides that there is no minimum size requirement for orders to be eligible for the Price Improvement Mechanism. Paragraph .05 concerns the termination of the exposure period by unrelated orders. In accordance with the Approval Order, the Exchange has continually submitted certain data in support of extending the current pilot programs. The Exchange proposes to extend these pilot programs in their present form, through July 18, 2011, to give the Exchange and the Commission additional time to evaluate the effects of these pilot programs before requesting permanent approval of the rules. To aid the Commission in its evaluation of the PIM Functionality, ISE will also continue to provide additional PIM-related data as requested by the Commission.

2. Statutory Basis

The basis under the Securities Exchange Act of 1934 (the "Exchange Act") for this proposed rule change is found in Section 6(b)(5), in that the proposed rule change is designed to promote just and equitable principles of trade, remove impediments to and perfect the mechanisms of a free and open market and a national market system and, in general, to protect investors and the public interest. Since the Price Improvement Mechanism has been operating for a relatively short period of time, the Exchange believes it is appropriate to extend the pilot periods to provide the Exchange and Commission more data upon which to evaluate the rules.

B. Self-Regulatory Organization's Statement on Burden on Competition

The proposed rule change does not impose any burden on competition that is not necessary or appropriate in furtherance of the purposes of the Act.

C. Self-Regulatory Organization's Statement on Comments on the Proposed Rule Change Received From Members, Participants or Others

The Exchange has not solicited, and does not intend to solicit, comments on this proposed rule change. The Exchange has not received any written comments from members or other interested parties.

III. Date of Effectiveness of the Proposed Rule Change and Timing for Commission Action

Because the foregoing proposed rule change, as amended: (1) Does not significantly affect the protection of investors or the public interest; (2) does not impose any significant burden on competition; and (3) by its terms does not become operative for 30 days after the date of this filing, or such shorter time as the Commission may designate if consistent with the protection of investors and the public interest, the proposed rule change has become effective pursuant to Section 19(b)(3)(A) [7] of the Act and Rule 19b–4(f)(6) thereunder.[8]

A proposed rule change filed under Rule 19b–4(f)(6) [9] normally may not become operative prior to 30 days after the date of filing. However, Rule 19b–4(f)(6)(iii) [10] permits the Commission to designate a shorter time if such action is consistent with the protection of investors and the public interest. The ISE requests that the Commission waive the 30-day operative delay, as specified in Rule 19b–4(f)(6)(iii),[11] which would make the rule change operative upon filing. The Commission believes that waiving the 30-day operative delay is consistent with the protection of investors and the public interest because such waiver will allow the pilot period to continue without interruption.[12] Accordingly, the Commission designates the proposed rule change operative upon filing with the Commission.

At any time within 60 days of the filing of such proposed rule change, the Commission may summarily abrogate such rule change if it appears to the Commission that such action is necessary or appropriate in the public interest, for the protection of investors, or otherwise in furtherance of the purposes of the Act.

IV. Solicitation of Comments

Interested persons are invited to submit written data, views, and arguments concerning the foregoing, including whether the proposed rule change is consistent with the Act. Comments may be submitted by any of the following methods:

Electronic Comments

- Use the Commission's Internet comment form (*http://www.sec.gov/rules/sro.shtml);* or
- Send an e-mail to *rule-comments@sec.gov*. Please include File Number SR–ISE–2010–75 on the subject line.

Paper Comments

- Send paper comments in triplicate to Elizabeth M. Murphy, Secretary, Securities and Exchange Commission, 100 F Street, NE., Washington, DC 20549–1090.

All submissions should refer to File Number SR–ISE–2010–75. This file number should be included on the subject line if e-mail is used. To help the Commission process and review your comments more efficiently, please use only one method. The Commission will post all comments on the Commission's Internet Web site (*http://www.sec.gov/rules/sro.shtml).* Copies of the submission, all subsequent amendments, all written statements with respect to the proposed rule change that are filed with the Commission, and all written communications relating to the proposed rule change between the Commission and any person, other than those that may be withheld from the public in accordance with the provisions of 5 U.S.C. 552, will be available for Web site viewing and printing in the Commission's Public Reference Room, 100 F Street, NE., Washington, DC 20549, on official business days between the hours of 10 a.m. and 3 p.m. Copies of the filing also will be available for inspection and copying at the principal office of the Exchange. All comments received will be posted without change; the Commission does not edit personal identifying information from submissions. You should submit only information that you wish to make available publicly. All submissions should refer to File Number SR–ISE–2010–75 and should be submitted on or before August 13, 2010.

For the Commission, by the Division of Trading and Markets, pursuant to delegated authority.[13]

Florence E. Harmon,

Deputy Secretary.

[FR Doc. 2010–18035 Filed 7–22–10; 8:45 am]

BILLING CODE 8010–01–P

of Filing and Immediate Effectiveness of Proposed Rule Change Relating to the Extension of the Price Improvement Mechanism Pilot Program).

[7] 15 U.S.C. 78s(b)(3)(A).

[8] 17 CFR 240.19b–4(f)(6). In addition, Rule 19b–4(f)(6)(iii) requires a self-regulatory organization to provide the Commission with written notice of its intent to file the proposed rule change, along with a brief description and text of the proposed rule change, at least five business days prior to the date of filing of the proposed rule change, or such shorter time as designated by the Commission. The Exchange has met this requirement.

[9] *Id.*

[10] 17 CFR 240.19b–4(f)(6)(iii).

[11] *Id.*

[12] For purposes only of waiving the operative delay for this proposal, the Commission has considered the proposed rule's impact on efficiency, competition, and capital formation. *See* 15 U.S.C. 78c(f).

[13] 17 CFR 200.30–3(a)(12).

SECURITIES AND EXCHANGE COMMISSION

[Release No. 34–62512; File No. SR–BX–2010–046]

Self-Regulatory Organizations; NASDAQ OMX BX, Inc.; Notice of Filing and Immediate Effectiveness of Proposed Rule Change To Extend a Pilot Program That Allows for No Minimum Size Order Requirement for the Price Improvement Period Process Until July 18, 2011

July 16, 2010.

Pursuant to Section 19(b)(1) of the Securities Exchange Act of 1934 ("Act"),[1] and Rule 19b–4 thereunder,[2] notice is hereby given that on July 9, 2010 NASDAQ OMX BX, Inc. ("Exchange") filed with the Securities and Exchange Commission ("Commission") the proposed rule change as described in Items I and II below, which Items have been prepared by the self-regulatory organization. The Exchange filed the proposed rule change pursuant to Section 19(b)(3)(A) of the Act,[3] and Rule 19b–4(f)(6) thereunder,[4] which renders the proposal effective upon filing with the Commission. The Commission is publishing this notice to solicit comments on the proposed rule from interested persons.

I. Self-Regulatory Organization's Statement of the Terms of Substance of the Proposed Rule Change

(a) The Exchange proposes to amend the Supplementary Material to Chapter V, Section 18 (The Price Improvement Period "PIP") of the Rules of the Boston Options Exchange Group, LLC ("BOX") to extend a pilot program that permits BOX to have no minimum size requirement for orders entered into the PIP and under certain circumstances permits the premature termination of the PIP process ("PIP Pilot Program"). The text of the proposed rule change is available from the principal office of the Exchange, at the Commission's Public Reference Room and also on the Exchange's Internet Web site at *http://nasdaqomxbx.cchwallstreet.com/NASDAQOMXBX/Filings/.*

II. Self-Regulatory Organization's Statement of the Purpose of, and Statutory Basis for, the Proposed Rule Change

In its filing with the Commission, the self-regulatory organization included statements concerning the purpose of, and basis for, the proposed rule change and discussed any comments it received on the proposed rule change. The text of these statements may be examined at the places specified in Item IV below. The self-regulatory organization has prepared summaries, set forth in Sections A, B, and C below, of the most significant aspects of such statements.

A. Self-Regulatory Organization's Statement of the Purpose of, and Statutory Basis for, the Proposed Rule Change

1. Purpose

The purpose of the proposed rule change is to extend the PIP Pilot Program under the BOX Rules for twelve (12) additional months. The PIP Pilot Program allows BOX to have no minimum size requirement for orders entered into the PIP process and under certain circumstances permits the premature termination of the PIP process.[5] The proposed rule change retains the text of Supplementary Material .01 to Section 18 of Chapter V of the BOX Rules and seeks to extend the operation of the PIP Pilot Program until July 18, 2011.

The Exchange notes that the PIP Pilot Program provides small customer orders with benefits not available under the rules of some other exchanges. One of the important factors of the PIP Pilot Program is that it guarantees Participants the right to trade with their customer orders that are less than 50 contracts. In particular, any order entered into the PIP is guaranteed an execution at the end of the auction at a price at least equal to the national best bid or offer.

In further support of this proposed rule change, and as required by the Original PIP Pilot Program Approval Order, the Exchange represents that BOX has been submitting to the Exchange and to the Commission a PIP Pilot Program Report, offering detailed data from, and analysis of, the PIP Pilot Program. Although BOX is submitting the reports, the Exchange notes that it is also responsible for the timeliness and the accuracy of the information.

To aid the Commission in its evaluation of the PIP Pilot Program, BOX has represented to the Exchange that BOX will provide the following additional information each month: (1) The number of orders of 50 contracts or greater entered into the PIP auction; (2) The percentage of all orders of 50 contracts or greater sent to BOX that are entered into BOX's PIP auction; (3) The spread in the option, at the time an order of 50 contracts or greater is submitted to the PIP auction; (4) Of PIP trades for orders of fewer than 50 contracts, the percentage done at the National Best Bid or Offer ("NBBO") plus $.01, plus $.02, plus $.03, etc.; (5) Of PIP trades for orders of 50 contracts or greater, the percentage done at the NBBO plus $.01, plus $.02, plus $.03, etc.; (6) The number of orders submitted by Order Flow Providers ("OFPs") when the spread was $.05, $.10, $.15, etc. For each spread, BOX will specify the percentage of contracts in orders of fewer than 50 contracts submitted to BOX's PIP that were traded by: (a) The OFP that submitted the order to the PIP; (b) BOX Market Makers assigned to the class; (c) other BOX Participants; (d) Public Customer Orders (including Customer PIP Orders ("CPOs")); and (e) unrelated orders (orders in standard increments entered during the PIP). For each spread, BOX will also specify the percentage of contracts in orders of 50 contracts or greater submitted to BOX's PIP that were traded by: (a) The OFP that submitted the order to the PIP; (b) BOX Market Makers assigned to the class; (c) other BOX Participants; (d) Public Customer Orders (including CPOs); and (e) unrelated orders (orders in standard increments entered during PIP); (7) For the first Wednesday of each month: (a) The total number of PIP auctions on that date; (b) the number of PIP auctions where the order submitted to the PIP was fewer than 50 contracts; (c) the number of PIP auctions where the order submitted to the PIP was 50 contracts or greater; (d) the number of PIP auctions (for orders of fewer than 50 contracts) with 0 participants (excluding the initiating participant), 1 participant (excluding the initiating participant), 2 participants (excluding the initiating participant), 3 participants (excluding the initiating participant), 4 participants (excluding the initiating participant), *etc.,* and (e) the number of PIP auctions (for orders of 50 contracts or greater) with 0 participants (excluding the initiating participant), 1 participant (excluding the initiating participant), 2

[1] 15 U.S.C. 78s(b)(1).

[2] 17 CFR 240.19b–4.

[3] 15 U.S.C. 78s(b)(3)(A).

[4] 17 CFR 240.19b–4(f)(6).

[5] The Pilot Program is currently set to expire on July 17, 2010. *See* Securities Exchange Act Release No. 60337 (July 17, 2009), 74 FR 36805 (July 24, 2009) (SR–BX–2009–38). *See also* Securities and Exchange Act Release Nos. 58942 (November 13, 2008), 73 FR 70394 (November 20, 2008) (SR–BSE–2008–49); 58195 (July 18, 2008), 73 FR 43801 (July 28, 2008) (SR–BSE–2008–39); 55999 (July 2, 2007), 72 FR 37549 (July 10, 2007) (SR–BSE–2007–27); 54066 (June 29, 2006), 71 FR 38434 (July 6, 2006) (SR–BSE–2006–24); 52149 (July 28, 2005), 70 FR 44704 (August 3, 2005) (SR–BSE–2005–22); 49068 (January 13, 2004), 69 FR 2775 (January 20, 2004) (SR–BSE–2002–15) ("Original PIP Pilot Program Approval Order"); and 51821 (June 10, 2005), 70 FR 35143 (June 16, 2005) (SR–BSE–2004–51) (Order approving, among other things, under certain circumstances the premature termination of a PIP process).

participants (excluding the initiating participant), 3 participants (excluding the initiating participant), 4 participants (excluding the initiating participant), *etc.;* and (8) For the third Wednesday of each month: (a) the total number of PIP auctions on that date; (b) the number of PIP auctions where the order submitted to the PIP was fewer than 50 contracts; (c) the number of PIP auctions where the order submitted to the PIP was 50 contracts or greater; (d) the number of PIP auctions (for orders of fewer than 50 contracts) with 0 participants (excluding the initiating participant), 1 participant (excluding the initiating participant), 2 participants (excluding the initiating participant), 3 participants (excluding the initiating participant), 4 participants (excluding the initiating participant), *etc.,* and (e) the number of PIP auctions (for orders of 50 contracts or greater) with 0 participants (excluding the initiating participant), 1 participant (excluding the initiating participant), 2 participants (excluding the initiating participant), 3 participants (excluding the initiating participant), 4 participants (excluding the initiating participant), *etc.*

2. Basis

The Exchange believes that the proposal is consistent with the requirements of Section 6(b) of the Act,[6] in general, and Section 6(b)(5) of the Act,[7] in particular, in that it is designed to foster cooperation and coordination with persons engaged in regulating, clearing, settling, processing information with respect to, and facilitating transactions in securities, to remove impediments to and perfect the mechanism for a free and open market and a national market system and, in general, to protect investors and the public interest. The Exchange believes that the data demonstrates that there is sufficient investor interest and demand to extend the PIP Pilot Program for an additional twelve (12) months. The Exchange represents that the Pilot Program is designed to provide investors with real and significant price improvement regardless of the size of the order.

B. Self-Regulatory Organization's Statement on Burden on Competition

The Exchange does not believe that the proposed rule change will impose any burden on competition not necessary or appropriate in furtherance of the purposes of the Act.

[6] 15 U.S.C. 78f(b).

[7] 15 U.S.C. 78f(b)(5).

C. Self-Regulatory Organization's Statement on Comments on the Proposed Rule Change Received From Members, Participants, or Others

The Exchange has neither solicited nor received comments on the proposed rule change.

III. Date of Effectiveness of the Proposed Rule Change and Timing for Commission Action

The Exchange has filed the proposed rule change pursuant to Section 19(b)(3)(A)(iii) of the Act[8] and Rule 19b–4(f)(6) thereunder.[9] Because the proposed rule change does not: (i) Significantly affect the protection of investors or the public interest; (ii) impose any significant burden on competition; and (iii) by its terms, become operative prior to 30 days from the date on which it was filed, or such shorter time as the Commission may designate, if consistent with the protection of investors and the public interest, the proposed rule change has become effective upon filing with the Commission pursuant to Section 19(b)(3)(A) of the Act[10] and Rule 19b–4(f)(6)(iii) thereunder.[11]

The Exchange has requested that the Commission waive the 30-day operative delay period. The Commission believes that waiver of the 30-day operative delay period is consistent with the protection of investors and the public interest because such waiver will allow the PIP Pilot program to continue without interruption. Accordingly, the Commission designates the proposed rule change operative upon filing with the Commission.[12]

At any time within 60 days of the filing of the proposed rule change, the Commission may summarily abrogate such rule change if it appears to the Commission that such action is necessary or appropriate in the public interest, for the protection of investors, or otherwise in furtherance of the purposes of the Act.

[8] 15 U.S.C. 78s(b)(3)(A)(iii).

[9] 17 CFR 240.19b–4(f)(6).

[10] 15 U.S.C. 78s(b)(3)(A).

[11] 17 CFR 240.19b–4(f)(6)(iii). In addition, Rule 19b–4(f)(6)(iii) requires the Exchange to give the Commission written notice of the Exchange's intent to file the proposed rule change, along with a brief description and text of the proposed rule change, at least five business days prior to the date of filing of the proposed rule change, or such shorter time as designated by the Commission. The Exchange has met this requirement.

[12] For purposes only of waiving the operative delay for this proposal, the Commission has considered the proposed rule's impact on efficiency, competition, and capital formation. *See* 15 U.S.C. 78c(f).

IV. Solicitation of Comments

Interested persons are invited to submit written data, views, and arguments concerning the foregoing, including whether the proposed rule change is consistent with the Act. Comments may be submitted by any of the following methods:

Electronic Comments

- Use the Commission's Internet comment form (*http://www.sec.gov/rules/sro.shtml*); or
- Send an e-mail to *rule-comments@sec.gov.* Please include File Number SR–BX–2010–046 on the subject line.

Paper Comments

- Send paper comments in triplicate to Elizabeth M. Murphy, Secretary, Securities and Exchange Commission, 100 F Street, NE., Washington, DC 20549–1090.

All submissions should refer to File Number SR–BX–2010–046. This file number should be included on the subject line if e-mail is used. To help the Commission process and review your comments more efficiently, please use only one method. The Commission will post all comments on the Commission's Internet Web site (*http://www.sec.gov/rules/sro.shtml*). Copies of the submission, all subsequent amendments, all written statements with respect to the proposed rule change that are filed with the Commission, and all written communications relating to the proposed rule change between the Commission and any person, other than those that may be withheld from the public in accordance with the provisions of 5 U.S.C. 552, will be available for Web site viewing and printing in the Commission's Public Reference Room, 100 F Street, NE., Washington, DC 20549, on official business days between the hours of 10 a.m. and 3 p.m. Copies of such filing also will be available for inspection and copying at the principal office of the Exchange. All comments received will be posted without change; the Commission does not edit personal identifying information from submissions. You should submit only information that you wish to make available publicly. All submissions should refer to File Number SR–BX–2010–046 and should be submitted on or before August 13, 2010.

For the Commission, by the Division of Trading and Markets, pursuant to delegated authority.[13]

Florence E. Harmon,

Deputy Secretary.

[FR Doc. 2010–18034 Filed 7–22–10; 8:45 am]

BILLING CODE 8010–01–P

DEPARTMENT OF STATE

[Public Notice 7090]

Culturally Significant Objects Imported for Exhibition Determinations: "Man, Myth, and Sensual Pleasures: Jan Gossart's Renaissance"

SUMMARY: Notice is hereby given of the following determinations: Pursuant to the authority vested in me by the Act of October 19, 1965 (79 Stat. 985; 22 U.S.C. 2459), Executive Order 12047 of March 27, 1978, the Foreign Affairs Reform and Restructuring Act of 1998 (112 Stat. 2681, *et seq.;* 22 U.S.C. 6501 note, *et seq.*), Delegation of Authority No. 234 of October 1, 1999, and Delegation of Authority No. 236–3 of August 28, 2000, I hereby determine that the objects to be included in the exhibition "Man, Myth, and Sensual Pleasures: Jan Gossart's Renaissance," imported from abroad for temporary exhibition within the United States, are of cultural significance. The objects are imported pursuant to loan agreements with the foreign owners or custodians. I also determine that the exhibition or display of the exhibit objects at the Metropolitan Museum of Art, New York, NY, from on or about October 5, 2010, until on or about January 17, 2011, and at possible additional exhibitions or venues yet to be determined, is in the national interest. Public Notice of these Determinations is ordered to be published in the **Federal Register**.

FOR FURTHER INFORMATION CONTACT: For further information, including a list of the exhibit objects, contact Carol B. Epstein, Attorney-Adviser, Office of the Legal Adviser, U.S. Department of State (telephone: 202/632–6473). The address is U.S. Department of State, SA–5, L/PD, Fifth Floor, Washington, DC 20522–0505.

Dated: July 15, 2010.

Ann Stock,

Assistant Secretary, Bureau of Educational and Cultural Affairs, Department of State.

[FR Doc. 2010–18117 Filed 7–22–10; 8:45 am]

BILLING CODE 4710–05–P

[13] 17 CFR 200.30–3(a)(12).

DEPARTMENT OF STATE

[Public Notice 7091]

Culturally Significant Objects Imported for Exhibition Determinations: "The Holocaust—Uniforms, Canisters, and Shoes"

SUMMARY: Notice is hereby given of the following determinations: Pursuant to the authority vested in me by the Act of October 19, 1965 (79 Stat. 985; 22 U.S.C. 2459), Executive Order 12047 of March 27, 1978, the Foreign Affairs Reform and Restructuring Act of 1998 (112 Stat. 2681, *et seq.;* 22 U.S.C. 6501 note, *et seq.*), Delegation of Authority No. 234 of October 1, 1999, and Delegation of Authority No. 236–3 of August 28, 2000, I hereby determine that the objects to be included in the exhibition "The Holocaust—Uniforms, Canisters, and Shoes," imported from abroad for temporary exhibition within the United States, are of cultural significance. The objects are imported pursuant to a loan agreement with the foreign owner or custodian. I also determine that the exhibition or display of the exhibit objects as part of the permanent exhibit at the U.S. Holocaust Memorial Museum, Washington, DC, from on or about September 2010 until on or about September 2015, and at possible additional exhibitions or venues yet to be determined, is in the national interest. Public Notice of these Determinations is ordered to be published in the **Federal Register**.

FOR FURTHER INFORMATION CONTACT: For further information, including a list of the exhibit objects, contact Carol B. Epstein, Attorney-Adviser, Office of the Legal Adviser, U.S. Department of State (telephone: 202/632–6473). The address is U.S. Department of State, SA–5, L/PD, Fifth Floor, Washington, DC 20522–0505.

Dated: July 15, 2010.

Ann Stock,

Assistant Secretary, Bureau of Educational and Cultural Affairs, Department of State.

[FR Doc. 2010–18115 Filed 7–22–10; 8:45 am]

BILLING CODE 4710–05–P

DEPARTMENT OF STATE

[Public Notice 7094]

Finding of No Significant Impact: San Diego-Tijuana Airport Cross Border Facility

SUMMARY: The Department of State announces a finding of no significant impact on the environment for the San Diego-Tijuana Airport Cross Border Facility international pedestrian bridge project sponsored by Otay-Tijuana Venture, L.L.C. An environmental impact statement will not be prepared.

FOR FURTHER INFORMATION CONTACT: Stewart Tuttle, U.S.-Mexico Border Affairs Coordinator, via e-mail at *WHA–BorderAffairs@state.gov;* by phone at 202–647–6356; or by mail at Office of Mexican Affairs—Room 3909, Department of State, 2201 C St. NW., Washington, DC 20520. Information about Presidential permits is available on the Internet at *http://www.state.gov/p/wha/rt/permit/.*

SUPPLEMENTARY INFORMATION: The following is the text of the Finding of No Significant Impact:

Introduction

Under Executive Order 11423, as amended, the Secretary of State is authorized to issue Presidential permits for the construction, connection, operation, and maintenance of facilities, including international bridges, at the borders of the United States if she finds them to be in the national interest. In 2009, Otay-Tijuana Venture, LLC (sponsor) applied for a Presidential permit to construct, operate, and maintain the Cross Border Facility (CBF) project, an international pedestrian bridge across the United States-Mexico border linking a passenger facility in the Otay Mesa section of San Diego, California, with a commercial passenger airport terminal in Tijuana, Baja California, Mexico. The Department has determined that construction of the proposed bridge requires a Presidential permit under Executive Order 11423, as amended, because the proposed bridge would pierce the United States-Mexico border.

The sponsor submitted in support of its application a draft environmental assessment (EA) that Helix Environmental Planning, Inc. prepared under the guidance and supervision of the U.S. Department of State (Department), consistent with the National Environment Policy Act (NEPA). The Department circulated the application and draft EA to the relevant federal, state, and local agencies for their review and received comments from some of those agencies. The sponsor responded to all the comments that agencies submitted by expanding and revising the draft EA. The Department also provided public notice of the draft EA in the **Federal Register**, 74 FR 68906 (December 29, 2009), and invited public comment for 45 days. In response to that public notice, the Department received only one anonymous, non-substantive comment.

The discussion below and the Department's finding of no significant impact (FONSI) are based upon the draft and final EA that Helix prepared, as supplemented by correspondence containing federal, state, and local agencies' comments and the sponsor's responses to those comments.

Need and Purpose

The San Diego/Tijuana region is the largest urban area along the U.S.—Mexico border, with a combined population of over four million people that is anticipated to grow to over five million by the year 2020. The U.S. and Mexican communities are closely linked and many people cross the border as part of their daily routine. Growth in cross-border trade and travel, combined with increased U.S. security requirements, has resulted in infrastructure-related challenges. As nearly constant congestion at the border indicates, existing infrastructure was not designed to handle current traffic volumes. The existing border crossings have become a bottleneck in the system of interchange between the two countries, restricting the movement of people and goods.

Tijuana Airport is one of four airports serving interior Mexico from the southern California region. Many travelers between Mexico and southern California prefer the Tijuana Airport to the alternatives because it offers more frequent and direct flights to a wider range of destinations in Mexico as well as less expensive tickets. To reach the Tijuana Airport from the United States, passengers must cross the international border in a bus or private vehicle or on foot then taking a taxi, shuttle or bus to reach the airport.

The San Diego-Tijuana CBF would provide U.S. originating or destined airline passengers using the Tijuana Airport the ability to access the airport without having to cross the U.S.—Mexico border via the congested San Ysidro, Otay Mesa, and future Otay Mesa East ports of entry (POE). This would provide airline passengers a quicker, more secure, and more reliable border crossing, freeing up capacity at the POEs, thus reducing the regional and national economic losses associated with border congestion.

The sponsor's proposed international pedestrian bridge would:

- Provide a more convenient, cost-effective, reliable, and secure crossing of the U.S.—Mexico border to access flights originating from and destined for the Tijuana Airport;
- Facilitate cross-border movement of ticketed air travelers using Tijuana Airport to minimize economic losses to the San Diego-Tijuana region caused by long and unpredictable border waits and congestion; and
- Develop facilities that would maintain and not compromise the security and integrity of the existing border.

Proposed Action

The sponsor proposes to build the CBF (including an above-grade pedestrian bridge), on- and off-site site roadway improvements, and parking areas. The CBF would consist of the phased construction of an approximately 75,000 square foot building on the southwestern nine acres of the site, along with a parking lot/garage on an adjacent 10.2-acre portion of the site. At build-out, the CBF would be designed to serve up to approximately 17,225 average daily passengers (or 1,200 peak-hour airline passengers travelling north from Mexico into the United States). The CBF would accommodate U.S. Customs and Border Protection facilities, retail facilities, administrative and security offices, and mechanical and electrical space.

The elevated, enclosed, secure, pedestrian bridge between the CBF and the entrance to the Tijuana Airport would be approximately 525 feet long and 33 feet wide. It would be divided into two corridors that would prevent contact between northbound and southbound pedestrians. Gates at the border would allow closure of the bridge during emergencies. The U.S. portion of the bridge would be 250 feet long and supported by pylons on both sides of the border. The base of the bridge would be a minimum of 19 feet above finished grade and provide for a minimum seven-foot clearance above the existing border fence. This height would accommodate required fire access and enable Border Patrol vehicles and future trucks along the truck route planned along the south boundary of the site to pass underneath the bridge structure.

A 5.4-acre area east of the proposed CBF would initially be used for surface parking on an interim basis. This parcel is identified as a potential site for cross-border cargo operations. The timing, design, and operational details of a cargo facility have not been determined at this time, and, if implemented, would require an amended Presidential Permit and additional NEPA review. The project would be constructed in phases over time and as demand increases.

The No Action Alternative

Under the No Action Alternative, the CBF and related facilities would not be constructed. Air travelers would continue to use the San Ysidro, Otay Mesa, and the future Otay Mesa East POEs to reach Tijuana Airport from the United States. Air travelers and other border crossers would experience increasing travel delays at the POEs as population, economic growth, and security inspections expand. Worsening traffic congestion along the border would lead to increased air pollutant emissions due to vehicles idling in queues at the POEs. The CBF project site would continue to be zoned for industrial development. This alternative would not meet the purpose and need of the proposed project (as identified above) as it would not provide a more convenient and reliable timeframe for crossing the border to access flights, would not facilitate cross-border movement of the 17,225 ticketed air travelers that would use the CBF daily to access the airport and would lead to increased congestion.

Affected Environment

The project is proposed on a privately-owned, 24.6-acre graded, level site located immediately adjacent to the U.S.-Mexico border in San Diego County, California. The property is under the local jurisdiction of the City of San Diego and situated in the community of Otay Mesa, approximately three miles east of the San Ysidro POE and two miles west of the Otay Mesa POE. The Tijuana Airport passenger terminal lies in Mexico, approximately 500 feet south of the project site. In 2007–08, the project site was subdivided and graded for industrial park use under prior approvals from the City of San Diego. Approximately two acres of public right-of-way were dedicated on site, including travel lanes, sidewalks, curbs and gutters, street-side landscaping and cul-de-sacs. Other site improvements installed as part of the previous project consist of utility lines, including storm drain, electrical connections, water and sewer lines, and various interim erosion-control measures, such as sedimentation/detention basins and hydroseed.

Land immediately surrounding the site is designated for industrial use and certain parcels contain industrial buildings and operations. Immediately to the west are developed industrial parcels, some of which contain industrial buildings. On land north of the project site is a drainage easement (including a detention structure) and improvements that receive on-site stormwater runoff and direct it toward the south. Vacant acres directly north of the project site are currently designated for industrial development. This

adjacent area was graded and improved in conjunction with the proposed project site under prior local approvals by the City of San Diego. South of and adjacent to the property is a 150-foot wide strip of land reserved for U.S. Border Patrol operations, as well as an area designated for a planned truck route that would lead from the south terminus of Britania Boulevard east toward the existing Otay Mesa POE. The U.S./Mexico border lies to the south of this 150-foot strip of land.

Environmental Consequences

No major adverse environmental effects are expected from the Proposed Action alternative if proper mitigation measures are implemented. The project could affect biological resources, unknown cultural resources, economic growth, air quality/global climate change, noise, traffic and other environmental factors. However, the project must comply with federal law, including any conditions of approval, which could consequently further minimize and/or mitigate any potential adverse effects. The conditions of approval (mitigation measures) are described below.

Findings

1. The EA was prepared consistent with all NEPA procedural requirements, including a 45-day public notice period and coordination with federal, tribal, state, and local governments.

2. The environmental commitments (mitigation measures) are likely to offset any negative impacts identified by the EA.

3. No disputes or controversies have arisen regarding the accuracy or presentation of environmental effects, as documented in the EA, supplemented by comments from relevant agencies and the public.

4. Construction, operation, and maintenance of the CBF and associated pedestrian bridge are not likely to result in cumulative significant impacts.

5. The California State Historic Preservation Officer reviewed the archeologist's cultural resources survey for the project site, concurred that the Area of Potential Effect was properly determined and defined, and, on June 21, 2010, made a Finding of No Historic Properties Affected.

6. Implementation of this action will have no adverse impact on any Indian Trust Assets.

7. Adherence to the environmental commitments described below, as well as the Environmental Assessment and related correspondence, ensures that implementation of the proposed action will not adversely affect biological resources.

8. Implementation of the project will not adversely affect any threatened or endangered species.

9. Construction or operation of the proposed international pedestrian crossing is not likely to result in any disproportionately high or adverse human health or environmental impact on minority populations, low-income populations, or Native American Indian tribes.

10. Implementation of this action will not violate federal, state, or local law.

Mitigation Measures

As described in the Environmental Assessment and subsequent correspondence, the sponsor agrees to take the following actions to ensure that potentially significant impacts do not become significant.

1. *Air quality/Global Climate Change:* Several measures will be implemented as part of the construction activities and project design to minimize emissions of greenhouse gases. As such, no additional avoidance, minimization, or mitigation measures would be required.

Construction:

- Minimizing equipment and truck idling
- Recycling construction waste and construction debris

Operations:

- Installing basic building insulation to conserve energy
- Locating glazing primarily on the east and north elevations
- Planting trees to shade the structure on the west and south sides
- Utilizing Energy Star appliances and light fixtures/sensors
- Implementing a recycling program for solid waste/trash
- Installing water-efficient landscaping and irrigation timers
- Installing bike racks/parking
- Providing bus, van, and taxi drop-off opportunities

2. *Noise:* Measures will be implemented to ensure that construction activities would comply with the City of San Diego Noise Ordinance. Regarding operational traffic noise once the facility is operating, Federal Highway Administration guidance sets forth the criteria for determining when an abatement measure is reasonable and feasible. Feasibility of noise abatement is basically an engineering concern. A minimum 5 dBA reduction in the future noise level must be achieved for an abatement measure to be considered feasible. Other considerations include topography, access requirements, other noise sources and safety considerations. The reasonableness determination is basically a cost-benefit analysis. Factors used in determining whether a proposed noise abatement measure is reasonable include: residents' acceptance, the absolute noise level, construction noise versus existing noise, environmental impacts of abatement, public and local agencies input, newly constructed development versus development pre-dating 1978, and the cost per benefited residence. The above factors will be considered in developing potential noise abatement measures for the residential property along Siempre Viva Road that would be affected by traffic noise due to the Proposed Action.

3. *Water Quality:* Implementation of the Proposed Action would require conformance with applicable regulatory requirements, including National Pollutant Discharge and Elimination System (NPDES), Clean Water Act, and associated City standards for compliance. No additional avoidance, minimization, or mitigation measures would be required.

4. *Public services and utilities:* The applicant shall prepare and implement a waste management plan that includes the following elements for grading, construction, and occupancy phases of the project as applicable:

- Tons of waste anticipated to be generated
- Material type of waste to be generated
- Source separation techniques for waste generated
- How materials will be reused on site
- Name and location of recycling, reuse or landfill facilities where waste will be taken if not reused on site
- A "buy recycled" program
- How the project will aim to reduce the generation of construction/demolition debris
- A plan of how waste reduction/recycling goals will be communicated to subcontractors
- A timeline for each of the phases of the project

The plan shall strive for a goal of 50 percent waste reduction and shall include specific performance measures to be assessed upon the completion of the project to measure success in achieving waste minimization goals.

5. *Cultural resources:* Avoidance, minimization, and mitigation measures related to unknown archaeological resources for the Proposed Action would involve preparing and implementing an Archaeological Resources Monitoring Plan. The Monitoring Plan would likely include the following types of measures in accordance with standard construction

practices in southern California, with detailed requirements to be determined during the plan preparation and approval process:

- A Qualified Archaeologist shall contract with a Native American monitor to be involved with the grading monitoring program;
- The Qualified Archaeologist and Native American monitor shall attend the pre-grading meeting with the contractors to explain and coordinate the requirements of the monitoring program;
- During the original cutting of previously undisturbed deposits, the archaeological monitor(s) and Native American monitor(s) shall be onsite full time to perform full-time monitoring. Inspections will vary based on the rate of excavation, the materials excavated, and the presence and abundance of artifacts and features. The frequency and location of inspections will be determined by the Qualified Archaeologist in consultation with the Native American monitor.
- Monitoring of cutting of previously disturbed deposits will be determined by the Principal Investigator.
- In the event that previously unidentified potentially significant cultural resources are discovered, the archaeological monitor(s) shall have the authority to divert or temporarily halt ground disturbance operations in the area of discovery to allow evaluation of potentially significant cultural resources. For significant cultural resources, a Research Design and Data Recovery Program to mitigate impacts shall be prepared by the Principal Investigator and then carried out using professional archaeological methods. Before construction activities are allowed to resume in the affected area, the artifacts shall be recovered and features recorded using professional archaeological methods. The Principal Investigator shall determine the amount of material to be recovered for an adequate artifact sample for analysis.
- If any human bones are discovered, the Principal Investigator shall contact the County Coroner. In the event that the remains are determined to be of Native America origin, the Most Likely Descendant (MLD), as identified by the Native American Heritage Commission, shall be contacted by the Principal Investigator in order to determine proper treatment and disposition of the remains.
- In the event that previously unidentified cultural resources are discovered, all cultural material collected during the grading monitoring program shall be processed and curated at a San Diego facility that meets federal standards per 36 CFR part 79 and, therefore, would be professionally curated and made available to other archaeologists/researchers for further study. The collections and associated records shall be transferred, including title, to an appropriate curation facility within San Diego County, to be accompanied by payment of the fees necessary for permanent curation. Evidence shall be in the form of a letter from the curation facility identifying that archaeological materials have been received and that all fees have been paid.

6. *Traffic:* Because the Proposed Action is part of the City of San Diego's Otay Mesa Community Plan, the project sponsor would be responsible for participating in the Facilities Benefit Assessment (FBA) and Public Facilities Financing Plan (PFFP) to fund the cost of the community-wide road and intersection improvements. All intersections and roadways planned in the Otay Mesa Community Plan area are forecast to operate at acceptable level of service in the future. The City is in the process of updating the Community Plan.

Determination

Consistent with NEPA (42 U.S.C. 4321 *et seq.*), the regulations of the Council on Environmental Quality (40 CFR 1500–1508), and the Department's implementing regulations (22 CFR Part 161, and in particular 22 CFR 161.7(c)), I find that issuance of a Presidential permit authorizing the construction, connection, operation, and maintenance of the Cross Border Facility, including an international pedestrian bridge, would not have a significant impact on the quality of the human environment. No Environmental Impact Statement will be prepared. A complete analysis of environmental impacts is contained within the EA, as supplemented by subsequent correspondence.

Recommended

Elizabeth Orlando, NEPA Coordinator, Office of Environmental Policy, Bureau of Oceans, Environment, and Science.

Approved

Alex Lee, Director, Office of Mexican Affairs, Bureau of Western Hemisphere Affairs.

End text.

Dated: July 19, 2010.

Stewart Tuttle,

U.S.-Mexico Border Affairs Coordinator, Department of State.

[FR Doc. 2010–18118 Filed 7–22–10; 8:45 am]

BILLING CODE 4710–29–P

DEPARTMENT OF STATE

[Public Notice 7093]

Bureau of Political-Military Affairs; Lifting of Policy of Denial Regarding Activities of Presidential Airways, Inc. and its Subsidiaries/Affiliates Regulated Under the International Traffic in Arms Regulations (ITAR) (22 CFR Parts 120–130)

ACTION: Notice.

SUMMARY: Notice is hereby given that the Department of State is lifting the policy of denial regarding Presidential Airways, Inc. and its subsidiaries/affiliates imposed on December 18, 2008 (73 FR 77099) pursuant to section 38 of the Arms Export Control Act (AECA) (22 U.S.C. 2778) and section 126.7 of the International Traffic in Arms Regulations (ITAR).

DATES: *Effective Date:* July 7, 2010.

FOR FURTHER INFORMATION CONTACT: Lisa V. Studtmann, Director, Office of Defense Trade Controls Compliance, Bureau of Political-Military Affairs, Department of State (202) 663–2980.

SUPPLEMENTARY INFORMATION: Section 126.7 of the ITAR provides that any application for an export license or other approval under the ITAR may be disapproved, and any license or other approval or exemption granted may be revoked, suspended, or amended without prior notice whenever, among other things, the Department of State believes that 22 U.S.C. 2778, any regulation contained in the ITAR, or the terms of any U.S. Government export authorization (including the terms of a manufacturing license or technical assistance agreement, or export authorization granted pursuant to the Export Administration Act, as amended) has been violated by any party to the export or other person having a significant interest in the transaction; or whenever the Department of State deems such action to be in furtherance of world peace, the national security or the foreign policy of the United States, or is otherwise advisable.

On December 2, 2008, the Department of State placed EP Investments, LLC, now Xe Services LLC (a/k/a Blackwater) (hereafter referred to as Xe), including its subsidiaries or associated companies, under a policy of denial to ensure that Xe is both capable of and willing to comply with the AECA and ITAR.

On April 7, 2010, AAR International, Inc. (AAR) acquired some of Xe's former subsidiaries, including Presidential Airways, Inc.; Aviation Worldwide Services, LLC; Air Quest, Inc.; STI Aviation, Inc.; and EP Aviation, LLC

(together referred to as "Presidential"). The Department of State has determined that AAR has taken appropriate steps to resolve Presidential's alleged violations. AAR has improved ITAR compliance procedures within Presidential and has entered into a civil settlement with the Department to resolve outstanding alleged violations, institute external compliance oversight, and continue and improve compliance measures involving Presidential.

Therefore, the Department rescinds its denial policy against Presidential, effective July 15, 2010.

Dated: July 15, 2010.

Andrew J. Shapiro,

Assistant Secretary, Bureau of Political-Military Affairs, Department of State.

[FR Doc. 2010–18109 Filed 7–22–10; 8:45 am]

BILLING CODE 4710–25–P

DEPARTMENT OF TRANSPORTATION

Federal Highway Administration

[Docket No. FHWA–2010–0090]

Agency Information Collection Activities: Notice of Request for Extension of Currently Approved Information Collection

AGENCY: Federal Highway Administration (FHWA), DOT.

ACTION: Notice of request for extension of currently approved information collection.

SUMMARY: The FHWA invites public comments about our intention to request the Office of Management and Budget's (OMB) approval for renewal of an existing information collection that is summarized below under **SUPPLEMENTARY INFORMATION**. We are required to publish this notice in the **Federal Register** by the Paperwork Reduction Act of 1995.

DATES: Please submit comments by September 21, 2010.

ADDRESSES: You may submit comments identified by DOT Docket ID Number 2010–0090 by any of the following methods:

Web Site: For access to the docket to read background documents or comments received go to the Federal eRulemaking Portal: Go to *http://www.regulations.gov.* Follow the online instructions for submitting comments.

Fax: 1–202–493–2251.

Mail: Docket Management Facility, U.S. Department of Transportation, West Building Ground Floor, Room W12–140, 1200 New Jersey Avenue, SE., Washington, DC 20590.

Hand Delivery or Courier: U.S. Department of Transportation, West Building Ground Floor, Room W12–140, 1200 New Jersey Avenue, SE., Washington, DC 20590, between 9 a.m. and 5 p.m. ET, Monday through Friday, except Federal holidays.

FOR FURTHER INFORMATION CONTACT: Aquilla Carter, (202) 493–2906, Office of the Chief Financial Officer, Federal Highway Administration, Department of Transportation, 1200 New Jersey Avenue, SE., Washington, DC 20590, Monday through Friday, except Federal holidays.

SUPPLEMENTARY INFORMATION:

Title: Voucher for Federal-aid Reimbursements.

OMB Control Number: 2125–0507.

Background: The Federal-aid Highway Program provides for the reimbursement to States for expenditure of State funds for eligible Federal-aid highway projects. The Voucher for Work Performed under Provisions of the Federal Aid and Federal Highway Acts as amended is utilized by the States to provide project financial data regarding the expenditure of State funds and to request progress payments from the FHWA. Title 23 U.S.C. 121(b) requires the submission of vouchers. The specific information required on the voucher is contained in 23 U.S.C. 121 and 117. Two types of submissions are required by recipients. One is a progress voucher where the recipient enters the amounts claimed for each FHWA appropriation, and the other is a final voucher where project costs are classified by work type. An electronic version of the Voucher for Work Performed under Provisions of the Federal Aid Highway Acts, as amended, Form PR–20, is used by all recipients to request progress and final payments.

Respondents: 50 State Transportation Departments, the District of Columbia, Puerto Rico, Guam, American Samoa, and the Virgin Islands.

Frequency: Annually.

Estimated Average Burden per Response: The respondents electronically submit an estimated total of 12,900 vouchers each year. Each voucher requires an estimated average of 30 minutes to complete.

Estimated Total Annual Burden Hours: 6,450 hours.

Public Comments Invited: You are asked to comment on any aspect of this information collection, including: (1) Whether the proposed collection of information is necessary for the U.S. DOT's performance, including whether the information will have practical utility; (2) the accuracy of the U.S. DOT's estimate of the burden of the proposed information collection; (3) ways to enhance the quality, usefulness, and clarity of the collected information; and (4) ways that the burden could be minimized, including the use of electronic technology, without reducing the quality of the collected information. The agency will summarize and/or include your comments in the request for OMB's clearance of this information collection.

Authority: The Paperwork Reduction Act of 1995; 44 U.S.C. Chapter 35, as amended; and 49 CFR 1.48.

Issued on: July 20, 2010.

Judith Kane,

Acting Chief, Management Programs and Analysis Division.

[FR Doc. 2010–18111 Filed 7–22–10; 8:45 am]

BILLING CODE 4910–22–P

DEPARTMENT OF TRANSPORTATION

Federal Highway Administration

[Docket No. FHWA–2010–0094]

Agency Information Collection Activities: Notice of Request for Extension of Currently Approved Information Collection

AGENCY: Federal Highway Administration (FHWA), DOT.

ACTION: Notice of request for extension of currently approved information collection.

SUMMARY: The FHWA invites public comments about our intention to request the Office of Management and Budget's (OMB) approval for renewal of an existing information collection that is summarized below under **SUPPLEMENTARY INFORMATION**. We are required to publish this notice in the **Federal Register** by the Paperwork Reduction Act of 1995.

DATES: Please submit comments by September 21, 2010.

ADDRESSES: You may submit comments identified by DOT Docket ID Number 2010–0094 by any of the following methods:

Web Site: For access to the docket to read background documents or comments received go to the Federal eRulemaking Portal: Go to *http://www.regulations.gov.* Follow the online instructions for submitting comments.

Fax: 1–202–493–2251.

Mail: Docket Management Facility, U.S. Department of Transportation, West Building Ground Floor, Room W12–140, 1200 New Jersey Avenue, SE., Washington, DC 20590.

Hand Delivery or Courier: U.S. Department of Transportation, West

Building Ground Floor, Room W12–140, 1200 New Jersey Avenue, SE., Washington, DC 20590, between 9 a.m. and 5 p.m. ET, Monday through Friday, except Federal holidays.

FOR FURTHER INFORMATION CONTACT: John Nicholas, (202) 366–2317, Office of Freight Management and Operations, Federal Highway Administration, Department of Transportation, 1200 New Jersey Avenue, SE., Washington, DC 20590, Monday through Friday, except Federal holidays.

SUPPLEMENTARY INFORMATION:

Title: Certification of Enforcement of Vehicle Size and Weight Laws.

OMB Control Number: 2125–00034.

Background: Title 23, U.S.C. 141, requires each State, the District of Columbia and Puerto Rico to file an annual certification that they are enforcing their size and weight laws on Federal-aid highways and that their Interstate System weight limits are consistent with Federal requirements to be eligible to receive an apportionment of Federal highway trust funds. Section 141 also authorizes the Secretary to require States to file such information as is necessary to verify that their certifications are accurate. To determine whether States are adequately enforcing their size and weight limits, each must submit an updated plan for enforcing their size and weight limits to the FHWA at the beginning of each fiscal year. At the end of the fiscal year, they must submit their certifications and sufficient information to verify that their enforcement goals established in the plan have been met. Failure of a State to file a certification, adequately enforce its size and weight laws and enforce weight laws on the Interstate System that are consistent with Federal requirements, could result in a specified reduction of its Federal highway fund apportionment for the next fiscal year. In addition, section 123 of the Surface Transportation Assistance Act of 1978 (Pub. L. 95–599, 92 Stat.2689, 2701) requires each jurisdiction to inventory (1) its penalties for violation of its size and weight laws, and (2) the term and cost of its oversize and overweight permits.

Respondents: The State Departments of Transportation (or equivalent) in the 50 states, the District of Columbia, and the Commonwealth of Puerto Rico.

Frequency: Twice annually.

Estimated Average Burden per Response: Each response will take approximately 40 hours.

Estimated Total Annual Burden Hours: 4,160 hours.

Public Comments Invited: You are asked to comment on any aspect of this information collection, including: (1) Whether the proposed collection of information is necessary for the U.S. DOT's performance, including whether the information will have practical utility; (2) the accuracy of the U.S. DOT's estimate of the burden of the proposed information collection; (3) ways to enhance the quality, usefulness, and clarity of the collected information; and (4) ways that the burden could be minimized, including the use of electronic technology, without reducing the quality of the collected information. The agency will summarize and/or include your comments in the request for OMB's clearance of this information collection.

Authority: The Paperwork Reduction Act of 1995; 44 U.S.C. Chapter 35, as amended; and 49 CFR 1.48.

Issued on: July 20, 2010.

Judith Kane,

Acting Chief, Management Programs and Analysis Division.

[FR Doc. 2010–18113 Filed 7–22–10; 8:45 am]

BILLING CODE 4910–22–P

DEPARTMENT OF TRANSPORTATION

Pipeline and Hazardous Materials Safety Administration Office of Hazardous Materials Safety

Notice of Application for Special Permits

AGENCY: Pipeline and Hazardous Materials Safety Administration (PHMSA), DOT.

ACTION: List of Applications for Special Permits.

SUMMARY: In accordance with the procedures governing the application for, and the processing of, special permits from the Department of Transportation's Hazardous Material Regulations (49 CFR part 107, subpart B), notice is hereby given that the Office of Hazardous Materials Safety has received the application described herein. Each mode of transportation for which a particular special permit is requested is indicated by a number in the "Nature of Application" portion of the table below as follows: 1—Motor vehicle, 2—Rail freight, 3—Cargo vessel, 4—Cargo aircraft only, 5—Passenger-carrying aircraft.

DATES: Comments must be received on or before August 23, 2010.

Address Comments to: Record Center, Pipeline and Hazardous Materials Safety Administration, U.S. Department of Transportation, Washington, DC 20590.

Comments should refer to the application number and be submitted in triplicate. If confirmation of receipt of comments is desired, include a self-addressed stamped postcard showing the special permit number.

FOR FURTHER INFORMATION CONTACT: Copies of the applications are available for inspection in the Records Center, East Building, PHH–30, 1200 New Jersey Avenue Southeast, Washington DC or at *http://regulations.gov.*

This notice of receipt of applications for special permit is published in accordance with Part 107 of the Federal hazardous materials transportation law (49 U.S.C. 5117(b); 49 CFR 1.53(b)).

Issued in Washington, DC, on July 16, 2010.

Ryan Paquet,

Acting Director, Office of Hazardous Materials Special Permits and Approvals.

Application No.	Docket No.	Applicant	Regulation(s) affected	Nature of special permits thereof
NEW SPECIAL PERMITS				
15059–N	.....	Raytheon Missile Systems Company, Tucson, AZ.	49 CFR 173.301, 173.302 and 173.306.	To authorize the transportation in commerce of helium in non-DOT specification packaging (cryoengines and assemblies of Maverick Missiles, Guidance Control Sections and Training Guidance Missiles containing cryoengines). (modes 1, 4, 5)

Application No.	Docket No.	Applicant	Regulation(s) affected	Nature of special permits thereof
15062–N		Ryan Air Inc.	49 CFR 173.302(f)(3) and (f)(4) and 173.304(f)(3) and (f)(4).	To authorize the transportation in commerce of cylinders containing oxidizing gases without outer packaging capable of passing the Flame Penetration and Resistance Test and the Thermal Resistance Test, when no other practical means of transportation exist. (modes 4,5)
15069–N		Arkema, Inc., Philadelphia, PA.	49 CFR 173.225(e)	To authorize the transportation in commerce of Organic peroxide Type F, Liquid in UN31HA1 intermediate bulk containers by motor vehicle. (mode 1)
15070–N		Carleton Technologies, Inc., Westminster, MD.	49 CFR 173.302a, 173.304a and 180.205.	To authorize the manufacture marking, sale and use of carbon and glass fiber reinforced, brass lined composite pressure vessels. (modes 1, 2, 3, 4, 5)
15071–N		Orbital Sciences Corporation, Dulles, VA.	49 CFR 173.62(c)	To authorize the transportation in commerce of a Cartridge, power device installed as part of a launch vehicle subassembly in alternative packaging by motor vehicle and cargo vessel. (modes 1, 3)
15073–N		Utility Aviation, Inc	49 CFR 172.101 Column (9B), 172.204(c)(3), 173.27(b)(2), 173.30(a)(1), 175.200, 172.300 and 172.400.	To authorize the transportation in commerce of certain hazardous materials by cargo aircraft including by external load in remote areas of the US without being subject to hazard communication requirements and quantity limitations where no other means of transportation is available. (mode 4)
15075–N		Lynden Air Cargo, Anchorage, AK.	49 CFR 173.302(f)(3) and (f)(4) and 173.304(f)(3) and (f)(4).	To authorize the transportation in commerce of cylinders containing oxidizing gases without outer packaging capable of passing the Flame Penetration and Resistance Test and the Thermal Resistance Test, when no other practical means of transportation exist. (mode 4)
15076–N		Arctic Transportation Services, Anchorage AK.	49 CFR 173.302(f)(3) and (f)(4) and 173.304(f)(3) and (f)(4).	To authorize the transportation in commerce of cylinders containing oxidizing gases without outer packaging capable of passing the Flame Penetration and Resistance Test and the Thermal Resistance Test, when no other practical means of transportation exist. (mode 4)
15077–N		Frontier Flying Service, Inc., Fairbanks, AK.	49 CFR 173.302(f)(3) and (f)(4) and 173.304(f)(3) and (f)(4).	To authorize the transportation in commerce of cylinders containing oxidizing gases without outer packaging capable of passing the Flame Penetration and Resistance Test and the Thermal Resistance Test, when no other practical means of transportation exist. (mode 4)
15078–N		Spernak Airways, Anchorage, AK.	49 CFR 173.302(f)(3) and (f)(4) and 173.304(f)(3) and (f)(4).	To authorize the transportation in commerce of cylinders containing oxidizing gases without outer packaging capable of passing the Flame Penetration and Resistance Test and the Thermal Resistance Test, when no other practical means of transportation exist. (mode 4)
15079–N		Northern Air Cargo, Anchorage, AK.	49 CFR 173.302(f)(3) and (f)(4) and 173.304(f)(3) and f)(4).	To authorize the transportation in commerce of cylinders containing oxidizing gases without outer packagings capable of passing the Flame Penetration and Resistance Test and the Thermal Resistance Test, when no other practical means of transportation exist. (mode 4)
15080–N		Alaska Airlines, Seattle, WA.	49 CFR 173.302(f)(3) and (f)(4) and 173.304(f)(3) and (f)(4).	to authorize the transportation in commerce of cylinders containing oxidizing gases without rigid outer packagings without outer packaging capable of passing the Flame Penetration and Resistance Test and the Thermal Resistance Test, when no other practical means of transportation exist. (mode 4)

[FR Doc. 2010–17792 Filed 7–22–10; 8:45 am]

BILLING CODE 4909–60–M

DEPARTMENT OF TRANSPORTATION

Pipeline and Hazardous Materials Safety Administration

[PHMSA–2010–0196; Notice No. 10–4]

Revisions of the Emergency Response Guidebook

AGENCY: Pipeline and Hazardous Materials Safety Administration, DOT.

ACTION: Notice; request for comments.

SUMMARY: This notice advises interested persons that the Pipeline and Hazardous Materials Safety Administration (PHMSA) is soliciting comments on the development of the 2012 Emergency Response Guidebook (ERG2012), particularly from those who have experience using the 2008 Emergency Response Guidebook (ERG). The ERG is for use by emergency services personnel to provide guidance for initial response to hazardous materials incidents. The ERG2012 will supersede the ERG2008. The development of the ERG2012 is a joint effort involving the transportation agencies of the United States, Canada, and Mexico.

DATES: Comments must be received by September 21, 2010.

ADDRESSES: You may submit comments identified by the docket number PHMSA–2010–0196 (Notice No. 10–4) by any of the following methods:

- *Federal e-Rulemaking Portal:* Go to *http://www.regulations.gov.* Follow the online instructions for submitting comments.
- *FAX:* (1–202)–493–2251.
- *Mail:* Docket Operations, U.S. Department of Transportation, West Building, Ground Floor, Room W12–140, Routing Symbol M–30, 1200 New Jersey Avenue, SE., Washington, DC 20590–0001.
- *Hand Delivery:* To Docket Operations; Room W12–140 on the ground floor of the West Building, 1200 New Jersey Avenue, SE., Washington, DC 20590–0001, between 9 a.m. and 5 p.m., Monday through Friday, except Federal holidays.

Instructions: All submissions must include the agency name and docket number PHMSA–2010–0196 (Notice No. 10–4) for this notice. Note that all comments received will be posted without change to *http://www.regulations.gov,* including any personal information provided.

Docket: For access to the docket to read background documents and comments received, go to *http://www.regulations.gov* at any time or Room W12–140, Ground Level, Washington, DC, between 9 a.m. and 5 p.m., Monday through Friday, except Federal holidays.

FOR FURTHER INFORMATION CONTACT: Suzette Paes, Office of Hazardous Materials Initiatives and Training (PHH–50), Pipeline and Hazardous Materials Safety Administration (PHMSA), 1200 New Jersey Avenue, SE., Washington, DC 20590–0001. Telephone number: (202) 366–4900, e-mail: *suzette.paes@dot.gov.*

SUPPLEMENTARY INFORMATION:

A. Background and Purpose

The Federal hazardous materials transportation law, 49 U.S.C. 5101 *et seq.*, authorizes the Secretary of Transportation (Secretary) to issue and enforce regulations deemed necessary to ensure the safe transport of hazardous materials in commerce. In addition, the law directs the Secretary to provide law enforcement and fire-fighting personnel with technical information and advice for responding to emergencies involving the transportation of hazardous materials.

PHMSA developed the Emergency Response Guidebook (ERG) for use by emergency services personnel to provide guidance for initial response to hazardous materials incidents. Since 1980, it has been the goal of PHMSA that all public emergency response vehicles (fire-fighting, police, and rescue squads) will carry a copy of the ERG. To date and without charge, PHMSA has distributed more than 11 million copies of the ERG to emergency service agencies. Since 1996, the Pipeline and Hazardous Materials Safety Administration (PHMSA), Transport Canada, and the Secretary of Communication and Transport of Mexico have developed the ERG as a joint effort. The ERG2012 will supersede the ERG2008 and will be published in English, French, and Spanish.

Publication of the ERG2012 will increase public safety by providing consistent emergency response procedures for hazardous materials incidents in North America. To continually improve the ERG, PHMSA is publishing this notice to actively solicit comments from interested parties on their experiences using the ERG2008 and on ways the ERG could be modified or improved.

B. Emergency Response Guidebook Questions:

To assist in the gathering of information, PHMSA solicits comments on ERG user concerns, experiences using the ERG2008, and on the following questions. We are also interested in any other comments stakeholders and users wish to provide.

1. In what way(s) does the ERG achieve its purpose to aid first responders in quickly identifying the specific or generic hazards of the materials(s) involved in the incident, and protecting themselves and the general public during the initial response phase of the incident?

2. How can the ERG be made more user-friendly for emergency responders? Please provide examples.

3. In what way(s) can the pictures, pictograms, and symbols shown in the ERG be used more effectively and efficiently?

4. What format(s) of the ERG are being used (hardcopy, electronic, on-line, etc.) and why?

5. How often is the ERG used in a hazmat emergency?

6. Is the most useful information emphasized effectively in the ERG2008 for its intended purpose?

7. How could the ERG be enhanced to better assist with go/no-go decision making while staying focused on its stated purpose? Please provide examples.

8. Have users experienced inconsistent guidance between utilizing the ERG and other sources of technical information? How could these inconsistencies be reconciled?

9. Are there ways the White Pages could be improved or enhanced? For example:

- How could or should sections of the ERG be combined or merged? Please explain and provide examples.
- What additional identification charts should be added, if any? What other subject matter should be addressed?
- Is the information provided in the Table of Placards, Rail Identification Chart and Road Trailer Identification Chart appropriate and correct? How could this information be made more useful and clear? Should other information be included or removed? If so, what information?
- Could current charts, and the information provided by those charts, be formatted in a more effective manner? How could they be improved to be more easily read and used?
- How could the Protective Clothing section be improved or enhanced? What additional information could be included or removed?
- In what way(s) could the information provided on chemical, biological, and radiological differences be improved upon or enhanced? What

information could be included or removed?

• Are the terms listed in the Glossary appropriate and current? What additional terms should be added? What terms should be removed or changed?

• Are the sections of the White Pages in the appropriate sequence? If not, how should the information be organized?

10. Have any identification numbers or material names been incorrectly assigned or cross-referenced to each other in the Yellow or Blue Pages of the ERG2008?

11. In the Yellow or Blue Pages of the ERG2008, has any identification number and/or material name been assigned to an incorrect Guide number? If so, please note the identification number, material name, and the Guide number, and provide the correct information and reason for this change.

12. Are the recommendations and responses provided in each of the Orange Guide Pages appropriate to the material it's assigned to? If not, please explain and recommend a correction.

13. How could Table 1—"Initial Isolation and Protective Action Distances" and Table 2—"Water Reactive Materials Which Produce Toxic Gases," or the Introduction and Description of each Table be modified or improved?

14. When calling any of the Emergency Response Telephone Numbers listed in the ERG2008, have there been any experiences with a busy telephone line, disconnection, or no response?

15. In terms of the usefulness of the ERG2008, has the type and quality of information been appropriate for the response needs? Please explain.

16. Are there emergency response providers not shown in the ERG2008 that have been used and found to be reliable that should be listed in the Emergency Response Telephone Numbers section? If so, who and why?

In addition to the specific questions asked in this Notice, PHMSA is also interested in any supporting data and analyses that will enhance the value of the comments submitted.

Issued in Washington, DC, on July 20, 2010 under the authority delegated in 49 CFR part 106.

R. Ryan Posten,

Senior Director for Hazardous Materials Safety.

[FR Doc. 2010–18134 Filed 7–22–10; 8:45 am]

BILLING CODE 4910–60–P

DEPARTMENT OF THE TREASURY

Office of Foreign Assets Control

Designation of ANWAR AL–AULAQI Pursuant to Executive Order 13224 and the Global Terrorism Sanctions Regulations, 31 CFR Part 594

AGENCY: Office of Foreign Assets Control, Treasury.

ACTION: Notice.

SUMMARY: The Treasury Department's Office of Foreign Assets Control ("OFAC") is publishing the name of one newly designated individual whose property and interests in property are blocked pursuant to Executive Order 13224 of September 23, 2001, "Blocking Property and Prohibiting Transactions With Persons Who Commit, Threaten To Commit, or Support Terrorism," and the Global Terrorism Sanctions Regulations, 31 CFR part 594.

DATES: The designation by the Director of OFAC of the one individual identified in this notice was publicly announced on July 12, 2010.

FOR FURTHER INFORMATION CONTACT: Assistant Director, Compliance Outreach & Implementation, Office of Foreign Assets Control, Department of the Treasury, Washington, DC 20220, tel.: 202/622–2490.

SUPPLEMENTARY INFORMATION:

Electronic and Facsimile Availability

This document and additional information concerning OFAC are available from OFAC's Web site (*http://www.treas.gov/ofac*). Certain general information pertaining to OFAC's sanctions programs also is available via facsimile through a 24-hour fax-on-demand service, tel.: 202/622–0077.

Background

On September 23, 2001, the President issued Executive Order 13224 (the "Order") pursuant to authorities including the International Emergency Economic Powers Act, 50 U.S.C. 1701–1706, and the United Nations Participation Act of 1945, 22 U.S.C. 287c. In the Order, the President declared a national emergency to address grave acts of terrorism and threats of terrorism committed by foreign terrorists, including the September 11, 2001, terrorist attacks in New York and Pennsylvania and at the Pentagon. The Order imposes economic sanctions on persons who have committed, pose a significant risk of committing, or support acts of terrorism. The President identified in the Annex to the Order, as amended by Executive Order 13268 of July 2, 2002, 13 individuals and 16 entities as subject to the economic sanctions. The Order was further amended by Executive Order 13284 of January 23, 2003, to reflect the creation of the Department of Homeland Security.

Section 1 of the Order blocks, with certain exceptions, all property and interests in property that are in or hereafter come within the United States or the possession or control of United States persons, of: (1) Foreign persons listed in the Annex to the Order; (2) foreign persons determined by the Secretary of State, in consultation with the Secretary of the Treasury, the Secretary of the Department of Homeland Security and the Attorney General, to have committed, or to pose a significant risk of committing, acts of terrorism that threaten the security of U.S. nationals or the national security, foreign policy, or economy of the United States; (3) persons determined by the Secretary of the Treasury, in consultation with the Departments of State, Homeland Security and Justice, to be owned or controlled by, or to act for or on behalf of those persons listed in the Annex to the Order or those persons determined to be subject to subsection 1(b), 1(c), or 1(d)(i) of the Order; and (4) except as provided in section 5 of the Order and after such consultation, if any, with foreign authorities as the Secretary of State, in consultation with the Secretary of the Treasury, the Secretary of the Department of Homeland Security and the Attorney General, deems appropriate in the exercise of his discretion, persons determined by the Secretary of the Treasury, in consultation with the Departments of State, Homeland Security and Justice, to assist in, sponsor, or provide financial, material, or technological support for, or financial or other services to or in support of, such acts of terrorism or those persons listed in the Annex to the Order or determined to be subject to the Order or to be otherwise associated with those persons listed in the Annex to the Order or those persons determined to be subject to subsection 1(b), 1(c), or 1(d)(i) of the Order.

The Global Terrorism Sanctions Regulations, 31 CFR part 594, implement the Order and delegate to the Director of OFAC the Secretary of the Treasury's authorities pursuant thereto. 31 CFR 594.802. On July 12, 2010 the Director of OFAC, in consultation with the Departments of State, Homeland Security, Justice and other relevant agencies, designated ANWAR AL–AULAQI as an individual whose property and interests in property are

blocked pursuant to the Order and the GTSR for, *inter alia,* acting for or on behalf of al-Qa'ida in the Arabian Peninsula (AQAP) pursuant to subsection 1(c) of the Order and for providing financial, material or technological support for, or other services to or in support of, acts of terrorism pursuant to subsection 1(d)(i) of the Order.

ANWAR AL–AULAQI, a dual U.S.-Yemeni citizen, is a leader of al-Qa'ida in the Arabian Peninsula (AQAP), a Yemen-based terrorist group that has claimed responsibility for numerous terrorist acts against Saudi, Korean, Yemeni, and U.S. targets since its inception in January 2009. ANWAR AL–AULAQI has pledged an oath of loyalty to AQAP emir, Nasir al-Wahishi, and is playing a key role in setting the strategic direction for AQAP. ANWAR AL–AULAQI has also recruited individuals to join AQAP, facilitated training at camps in Yemen in support of acts of terrorism, and helped focus AQAP's attention on planning attacks on U.S. interests.

Since late 2009, ANWAR AL–AULAQI has taken on an increasingly operational role in the group, including preparing Umar Farouk Abdulmutallab, who attempted to detonate an explosive device aboard a Northwest Airlines flight from Amsterdam to Detroit on Christmas Day 2009, for his operation. In November 2009, while in Yemen, Abdulmutallab swore allegiance to the emir of AQAP and shortly thereafter received instructions from ANWAR AL–AULAQI to detonate an explosive device aboard a U.S. airplane over U.S. airspace. After receiving this direction from ANWAR AL–AULAQI, Abdulmutallab obtained the explosive device he used in the attempted Christmas Day attack.

ANWAR AL–AULAQI was imprisoned in Yemen in 2006 on charges of kidnapping for ransom and being involved in an al-Qa'ida plot to kidnap a U.S. official, but was released from jail in December 2007 and subsequently went into hiding in Yemen.

As a result of this designation, all property and interests in property of ANWAR AL–AULAQI that are or hereafter come within the United States or within the possession or control of U.S. persons, including their overseas branches, are blocked. Blocked property may not be transferred, sold or otherwise dealt in without authorization. Any transaction or dealing by a U.S. person, or within the United States, in any property or interests in property of ANWAR AL–AULAQI is prohibited unless authorized, as is any transaction or dealing that evades or avoids this prohibition. It is also unlawful for any person to conspire to violate, or cause a violation of, this prohibition.

Certain transactions that are otherwise prohibited by the Order and the GTSR are authorized by pursuant to general licenses set forth in subpart E of the GTSR. In other cases, OFAC has discretion to issue licenses authorizing specific transactions that are otherwise prohibited by the Order and the GTSR. All requests for specific licenses should be made in writing to the Assistant Director for Licensing, U.S. Department of the Treasury, Office of Foreign Assets Control, 1500 Pennsylvania Avenue, NW., Washington, DC 20220. Licensing procedures are set forth in sections 501.801–802 of the Reporting, Procedures and Penalties Regulations ("RPPR"), 31 CFR Part 501. The RPPR also provide procedures for submitting requests for unblocking funds and reconsideration of a designation. 31 CFR 501.806–807.

The designated individual is as follows:

1. AL–AULAQI, Anwar (a.k.a. AL–AWLAKI, Anwar; a.k.a. AL–AWLAQI, Anwar; a.k.a. AULAQI, Anwar Nasser; a.k.a. AULAQI, Anwar Nasser Abdulla; a.k.a. AULAQI, Anwar Nasswer); DOB 21 Apr 1971; alt. DOB 22 Apr 1971; POB Las Cruces, New Mexico; citizen United States; alt. citizen Yemen (individual) [SDGT]

Dated: July 16, 2010.

Adam J. Szubin,

Director, Office of Foreign Assets Control.

[FR Doc. 2010–18102 Filed 7–22–10; 8:45 am]

BILLING CODE 4810–AL–P

Federal Register

Friday,
July 23, 2010

Part II

Department of Health and Human Services

Centers for Medicare & Medicaid Services

42 CFR Parts 409, 418, 424, et al.

Medicare Program; Home Health Prospective Payment System Rate Update for Calendar Year 2011; Changes in Certification Requirements for Home Health Agencies and Hospices; Proposed Rule

DEPARTMENT OF HEALTH AND HUMAN SERVICES

Centers for Medicare & Medicaid Services

42 CFR Parts 409, 418, 424, 484, and 489

[CMS–1510–P]

RIN 0938–AP88

Medicare Program; Home Health Prospective Payment System Rate Update for Calendar Year 2011; Changes in Certification Requirements for Home Health Agencies and Hospices

AGENCY: Centers for Medicare & Medicaid Services (CMS), HHS.

ACTION: Proposed rule.

SUMMARY: This proposed rule would set forth an update to the Home Health Prospective Payment System (HH PPS) rates, including: The national standardized 60-day episode rates, the national per-visit rates, the non-routine medical supply (NRS) conversion factors, and the low utilization payment amount (LUPA) add-on payment amounts, under the Medicare prospective payment system for HHAs effective January 1, 2011. This rule also proposes to update the wage index used under the HH PPS and, in accordance with The Affordable Care Act of 2010 (The Affordable Care Act), Public Law 111–148, to update the HH PPS outlier policy. In addition, this rule proposes changes to the home health agency (HHA) capitalization requirements. This rule further proposes to add clarifying language to the "skilled services" section. Finally, this rule incorporates new legislative requirements regarding face-to-face encounters with providers related to home health and hospice care.

DATES: To be assured consideration, comments must be received at one of the addresses provided below, no later than 5 p.m. on September 14, 2010.

ADDRESSES: In commenting, please refer to file code CMS–1510–P. Because of staff and resource limitations, we cannot accept comments by facsimile (FAX) transmission.

You may submit comments in one of four ways (please choose only one of the ways listed):

1. *Electronically.* You may submit electronic comments on this regulation to *http://www.regulations.gov.* Follow the instructions under the "More Search Options" tab.

2. *By regular mail.* You may mail written comments to the following address ONLY: Centers for Medicare & Medicaid Services, Department of Health and Human Services, Attention: CMS–1510–P, P.O. Box 1850, Baltimore, MD 21244–1850.

Please allow sufficient time for mailed comments to be received before the close of the comment period.

3. *By express or overnight mail.* You may send written comments to the following address ONLY: Centers for Medicare & Medicaid Services, Department of Health and Human Services, Attention: CMS–1510–P, Mail Stop C4–26–05, 7500 Security Boulevard, Baltimore, MD 21244–1850.

4. *By hand or courier.* If you prefer, you may deliver (by hand or courier) your written comments before the close of the comment period to either of the following addresses:

a. For delivery in Washington, DC—Centers for Medicare & Medicaid Services, Department of Health and Human Services, Room 445–G, Hubert H. Humphrey Building, 200 Independence Avenue, SW., Washington, DC 20201.

(Because access to the interior of the Hubert H. Humphrey Building is not readily available to persons without Federal government identification, commenters are encouraged to leave their comments in the CMS drop slots located in the main lobby of the building. A stamp-in clock is available for persons wishing to retain a proof of filing by stamping in and retaining an extra copy of the comments being filed.)

b. For delivery in Baltimore, MD—Centers for Medicare & Medicaid Services, Department of Health and Human Services, 7500 Security Boulevard, Baltimore, MD 21244–1850.

If you intend to deliver your comments to the Baltimore address, please call (410) 786–7195 in advance to schedule your arrival with one of our staff members.

Comments mailed to the addresses indicated as appropriate for hand or courier delivery may be delayed and received after the comment period.

Submission of comments on paperwork requirements. You may submit comments on this document's paperwork requirements by following the instructions at the end of the "Collection of Information Requirements" section in this document.

For information on viewing public comments, *see* the beginning of the **SUPPLEMENTARY INFORMATION** section.

FOR FURTHER INFORMATION CONTACT:
Randy Throndset, (410) 786–0131 (overall HH PPS).
James Bossenmeyer, (410) 786–9317 (for information related to payment safeguards).
Doug Brown, (410) 786–0028 (for quality issues).
Kathleen Walch, (410) 786–7970 (for skilled services requirements and clinical issues).

SUPPLEMENTARY INFORMATION:

Inspection of Public Comments: All comments received before the close of the comment period are available for viewing by the public, including any personally identifiable or confidential business information that is included in a comment. We post all comments received before the close of the comment period on the following Web site as soon as possible after they have been received: *http://www.regulations.gov.* Follow the search instructions on that Web site to view public comments.

Comments received timely will also be available for public inspection as they are received, generally beginning approximately 3 weeks after publication of a document, at the headquarters of the Centers for Medicare & Medicaid Services, 7500 Security Boulevard, Baltimore, Maryland 21244, Monday through Friday of each week from 8:30 a.m. to 4 p.m. EST. To schedule an appointment to view public comments, phone 1–800–743–3951.

Table of Contents

I. Background
A. Statutory Background
B. System for Payment of Home Health Services
C. Updates to the HH PPS
II. Provisions of the Proposed Regulation
A. Case-Mix Measurement
B. Hypertension Diagnosis Coding Under the HH–PPS
C. Therapy Coverage Requirements
D. Collecting Additional Claims Data for Future HH PPS Enhancements and Soliciting Comments on HH PPS Improvements
E. Outlier Policy
1. Background
2. Regulatory Update
3. Statutory Update
4. Outlier Cap
5. Loss Sharing Ratio and Fixed Dollar Ratio
6. Solicitation of Comments Regarding Imputed Costs
F. Proposed CY 2011 Payment Update
1. Home Health Market Basket Update
2. Home Health Care Quality Improvement
a. OASIS
b. Home Health Care CAHPS Survey (HH CAHPS)
3. Home Health Wage Index
4. Proposed CY 2011 Payment Update
a. National Standardized 60-Day Episode Rate
b. Proposed Updated CY 2011 National Standardized 60-Day Episode Payment Rate
c. Proposed National Per-Visit Rates Used To Pay LUPA's and Compute Imputed Costs Used in Outlier Calculations

d. Proposed LUPA Add-On Payment Amount Update
e. Non-Routine Medical Supply Commission Factor Update
5. Rural Add-On
G. Enrollment Provisions for HHAs
1. HHA Capitalization
2. Change of Ownership
3. Change in Majority Ownership Within 36 Months of Initial Enrollment or Change in Ownership
H. Home Health Face-to-Face Encounter
I. Solicitation of Comments: Future Plans To Group HH PPS Claims Centrally During Claims Processing
J. Proposed New Requirements Affecting Hospice Certifications and Recertification
III. Collection of Information Requirements
IV. Regulatory Impact Analysis

I. Background

A. Statutory Background

The Balanced Budget Act of 1997 (BBA) (Pub. L. 105–33) enacted on August 5, 1997, significantly changed the way Medicare pays for Medicare home health services. Section 4603 of the BBA mandated the development of the home health prospective payment system (HH PPS). Until the implementation of a HH PPS on October 1, 2000, home health agencies (HHAs) received payment under a retrospective reimbursement system.

Section 4603(a) of the BBA mandated the development of a HH PPS for all Medicare-covered home health services provided under a plan of care (POC) that were paid on a reasonable cost basis by adding section 1895 of the Social Security Act (the Act), entitled "Prospective Payment for Home Health Services". Section 1895(b)(1) of the Act requires the Secretary to establish a HH PPS for all costs of home health services paid under Medicare.

Section 1895(b)(3)(A) of the Act requires that: (1) The computation of a standard prospective payment amount include all costs for home health services covered and paid for on a reasonable cost basis and that such amounts be initially based on the most recent audited cost report data available to the Secretary, and (2) the standardized prospective payment amount be adjusted to account for the effects of case-mix and wage level differences among HHAs.

Section 1895(b)(3)(B) of the Act addresses the annual update to the standard prospective payment amounts by the home health applicable percentage increase. Section 1895(b)(4) of the Act governs the payment computation. Sections 1895(b)(4)(A)(i) and (b)(4)(A)(ii) of the Act require the standard prospective payment amount to be adjusted for case-mix and geographic differences in wage levels. Section 1895(b)(4)(B) of the Act requires the establishment of an appropriate case-mix change adjustment factor that adjusts for significant variation in costs among different units of services.

Similarly, section 1895(b)(4)(C) of the Act requires the establishment of wage adjustment factors that reflect the relative level of wages, and wage-related costs applicable to home health services furnished in a geographic area compared to the applicable national average level. Pursuant to 1895(b)(4)(C), the wage-adjustment factors used by the Secretary may be the factors used under section 1886(d)(3)(E) of the Act.

Section 1895(b)(5) of the Act, as amended by Section 3131 of the Affordable Care Act signed by the President on March 23, 2010 (Pub. L. 111–148), gives the Secretary the option to make additions or adjustments to the payment amount otherwise paid in the case of outliers because of unusual variations in the type or amount of medically necessary care. Section 3131(b) revised Section 1895(b)(5) so that total outlier payments in a given fiscal year (FY) or year may not exceed 2.5 percent of total payments projected or estimated.

In accordance with the statute, as amended by the BBA, we published a final rule (65 FR 41128) in the **Federal Register** on July 3, 2000, to implement the 1997 HH PPS legislation. The July 2000 final rule established requirements for the new HH PPS for home health services as required by section 4603 of the BBA, as subsequently amended by section 5101 of the Omnibus Consolidated and Emergency Supplemental Appropriations Act (OCESAA) for Fiscal Year 1999 (Pub. L. 105–277), enacted on October 21, 1998; and by sections 302, 305, and 306 of the Medicare, Medicaid, and SCHIP Balanced Budget Refinement Act (BBRA) of 1999 (Pub. L. 106–113), enacted on November 29, 1999. The requirements include the implementation of a HH PPS for home health services, consolidated billing requirements, and a number of other related changes. The HH PPS described in that rule replaced the retrospective reasonable cost-based system that was used by Medicare for the payment of home health services under Part A and Part B. For a complete and full description of the HH PPS as required by the BBA, *see* the July 2000 HH PPS final rule (65 FR 41128 through 41214).

On February 8, 2006, the Deficit Reduction Act of 2005 (Pub. L. 109–171) (DRA) was enacted. Section 5201 of the DRA added new Section 1895(b)(3)(B)(v) to the Act, which requires HHAs to submit data for purposes of measuring health care quality, and links the quality data submission to payment. This requirement is applicable for CY 2007 and each subsequent year. If an HHA does not submit quality data, the home health market basket percentage increase is reduced 2 percentage points. In accordance with the statute, we published a final rule (71 FR 65884, 65935) in the **Federal Register** on November 9, 2006, to implement the pay-for-reporting requirement of the DRA, which was codified at 42 CFR 484.225(h) and (i).

The Affordable Care Act made additional changes to the HH PPS. One of the changes in section 3131 of the Affordable Care Act is the amendment to section 421(a) of the Medicare Prescription Drug, Improvement, and Modernization Act (MMA) of 2003 (Pub. L. 108–173) as amended by section 5201(b) of the Deficit Reduction Act of 2005 (Pub. L. 109–171). The amended section 421(a) of the MMA requires, for home health services furnished in a rural area (as defined in section 1886(d)(2)(D) of the Act) with respect to episodes and visits ending on or after April 1, 2010 and before January 1, 2016, that the Secretary increase by 3 percent the payment amount otherwise made under section 1895 of the Act.

B. System for Payment of Home Health Services

Generally, Medicare makes payment under the HH PPS on the basis of a national standardized 60-day episode payment rate that is adjusted for the applicable case-mix and wage index. The national standardized 60-day episode rate includes the six home health disciplines (skilled nursing, home health aide, physical therapy, speech-language pathology, occupational therapy, and medical social services). Payment for non-routine medical supplies (NRS) is no longer part of the national standardized 60-day episode rate and is computed by multiplying the relative weight for a particular NRS severity level by the NRS conversion factor (*See* section III.C.4.e). Payment for durable medical equipment covered under the home health benefit is made outside the HH PPS payment. To adjust for case-mix, the HH PPS uses a 153-category case-mix classification to assign patients to a home health resource group (HHRG). Clinical needs, functional status, and service utilization are computed from responses to selected data elements in the OASIS assessment instrument.

For episodes with four or fewer visits, Medicare pays on the basis of a national

per-visit rate by discipline; an episode consisting of four or fewer visits within a 60-day period receives what is referred to as a low utilization payment adjustment (LUPA). Medicare also adjusts the national standardized 60-day episode payment rate for certain intervening events that are subject to a partial episode payment adjustment (PEP adjustment). For certain cases that exceed a specific cost threshold, an outlier adjustment may also be available.

C. Updates to the HH PPS

As required by section 1895(b)(3)(B) of the Act, we have historically updated the HH PPS rates annually in the **Federal Register**.

Our August 29, 2007 final rule with comment period set forth an update to the 60-day national episode rates and the national per-visit rates under the Medicare prospective payment system for HHAs for CY 2008. For analysis performed on CY 2005 home health claims data indicated a 12.78 percent increase in the observed case-mix since 2000. The case-mix represented the variations in conditions of the patient population served by the HHAs. Then a more detailed analysis was performed on the 12.78 percent increase in case-mix to see if any portion of that increase was associated with a real change in the actual clinical condition of home health patients. CMS examined data on demographics, family severity, and non-home health Part A Medicare expenditure data to predict the average case-mix weight for 2005. As a result of that analysis, CMS recognized that an 11.75 percent increase in case-mix was due to changes in coding practices and documentation rather than to treatment of more resource-intensive patients.

To account for the changes in case-mix that were not related to an underlying change in patient health status, CMS implemented a reduction over 4 years in the national standardized 60-day episode payment rates and the NRS conversion factor. That reduction was to be taken at 2.75 percent per year for three years beginning in CY 2008 and at 2.71 percent for the fourth year in CY 2011. CMS indicated that it would continue to monitor for any further increase in case-mix that was not related to a change in patient status, and would adjust the percentage reductions and/or implement further case-mix change adjustments in the future.

Most recently, we published a final rule in the **Federal Register** on November 10, 2009 (74 FR 58077) that set forth the update to the 60-day national episode rates and the national per-visit rates under the Medicare prospective payment system for home health services for CY 2010.

II. Provisions of the Proposed Regulation

A. Case-Mix Measurement

Since the HH PPS CY 2008 proposed rule, we have stated in HH PPS rulemaking that we would continue to monitor case-mix changes in the HH PPS and to update our analysis to measure change in case-mix, both nominal and real. We have continued to monitor case-mix changes, and our latest analysis continues to support the payment adjustments which we implemented in the CY 2008 HH PPS. As discussed in the CY 2010 rule, the analysis then indicated a 15.03 percent increase in the overall observed case-mix since 2000. We next determined what portion of that increase was associated with a real change in the actual clinical condition of home health patients.

As was done for the CY 2008 final rule, we used data from the pre-PPS period to estimate a regression-based, predictive model of individual case-mix weights based on measures of patients' demographic characteristics, clinical status, inpatient history, and Medicare costs in the time period leading up to their home health episodes. The regression coefficients from this model were applied to later episodes, allowing estimation of how much of the change in observed case-mix is attributable to changes in patient characteristics over time. We classify the sources of case-mix change into two major types: predicted and unpredicted. Predicted (or real) change is based on the relationship between patient characteristics and case-mix (that is coefficients from the regression model) and changes in the characteristics of patients over time (that is the change in mean values of the model covariates). Unpredicted (or nominal) change is the portion of case-mix change that cannot be explained by changes in patient characteristics. Nominal case-mix change is assumed to reflect differences over time in agency coding practices.

Our best estimate in the CY 2010 rule was that approximately 9.77 percent of the 15.03 percent increase in the overall observed case-mix between the IPS baseline and 2007 was real, that is, due to actual changes in patient characteristics. Our estimate was that a 13.56 percent nominal increase ($15.03 - (15.03 \times 0.0977)$) in case-mix was due to changes in coding procedures and documentation rather than to treatment of more resource-intensive patients.

We have since updated that analysis to include an additional year of data (CY 2008) for this CY 2011 proposed rule. This analysis was based on regression coefficients from CY 2008 episodes that reflect the relationship between model covariates and case-mix using the HHRG153 system. We used these regression coefficients combined with changes in patient characteristics to measure the amount of predicted case mix change for 2007 through 2008.

Our analyses indicate a 19.40 percent increase in the overall observed case-mix since 2000. Our estimate is that approximately 10.07 percent of the total increase in the overall observed case-mix between the IPS baseline and 2008 is real, that is, associated with actual changes in patient characteristics. Specifics regarding this analysis are described later in this section.

The estimate of real case-mix change is a small proportion of the total change in case mix since the IPS baseline. With each successive sample, beginning with 2005 data (in the CY 2008 final rule), the predicted average national case-mix weight has changed very little because the variables (such as preadmission location, non-home health Part A Medicare expenditures, and inpatient stay classification, as mentioned above) in the model used to predict case-mix are not changing much. At the same time, the actual average case-mix has continued to grow steadily. Thus, the gap between the predicted case-mix value, which is based on information external to the OASIS, and the actual case-mix value, has increased with each successive year of data. Consequently, as a result of this analysis, we recognize that a 17.45 percent nominal increase ($19.40 - (19.40 \times 0.1007)$) in case-mix is due to changes in coding practices and documentation rather than to treatment of more resource-intensive patients. This 17.45 percent increase in case mix reflects a much larger increase in nominal case-mix from the IPS baseline to 2008 than had been previously been occurring under the HH PPS. Specifically, from 2000 to 2007, we observed about a 1 percent per year increase in total average case-mix. However, that annual change increased to slightly more than 4 percent between 2007 and 2008.

We wanted to determine how this growth in case-mix weight from 2007 to 2008 was affected by the changes implemented with the 2008 refinements. We identified these average case-mix values by estimating the average case mix weight on the 2007 claims of a random 20 percent sample of HH beneficiaries. We used two groupers—the 80-group 2007 grouper

(average = 1.2606) and the 153-group 2008 grouper (average = 1.2552). The difference in averages was −0.0054, indicating that the changeover to the new 2008 grouper algorithm itself slightly reduced the average case mix weight.

Next, to assess behavioral changes which may have been incentivized by the 2008 refinements, we estimated the average case mix weights on both 2007 claims data and 2008 claims data for a random 20 percent sample of HH beneficiaries, using the 2008 grouper. (Only non-LUPA episodes are included in this analysis, as LUPA episodes are not paid using case mix weights.) We compared the resulting averages. The total change using the 2008 grouper was 0.0533: the 2007 average was 1.2552 and the 2008 average was 1.3085. It is important to note that this comparison of the 2007 and 2008 claims data uses the same grouper (the 153-group system, which includes co-morbid conditions), and that this estimate of national average case-mix on the 2007 sample differs very little (that is −.0054) from the estimate we derived from using the actual grouper in effect in 2007.

We decomposed the change in average case-mix weight, 0.0533, into an effect of the 2007–2008 shift in the distribution of the number of therapy visits per episode, and an effect of the 2007–2008 change in the average case-mix weight at each count of therapy visits in the distribution. The latter is assumed to result mostly from the incentives to report co-morbid conditions, stemming from the introduction of the 153 group system.

The former is assumed to result mostly from a behavioral response on the part of agencies to the new system of therapy thresholds introduced in 2008. Prior to 2008, case mix weights were generally highest for episodes that met the single, 10-visit therapy threshold. Under the system in place since 2008, multiple thresholds above and below 10 therapy visits were created. By creating multiple thresholds and severity steps between thresholds, we intended to move incentives away from payment-driven therapy treatment plans to clinically driven ones. However, creating a new set of high therapy thresholds above 13 therapy visits, to adequately compensate agencies for treating the relatively few patients needing such large amounts of therapy, also may have had unintended consequences. One such consequence may have been that agencies responded by padding treatment plans to reach the new, higher thresholds. Episodes which would require such high numbers of therapy visits generally would have very high case mix weights (mostly weights of 2 or higher).

The decomposition method first holds the average case mix weight constant (at the 2007 values) at each level of therapy visits, and measures the effect of the shift to the new distribution of therapy visits. The method then holds the distribution of therapy visits constant (at the 2007 distribution) and measures the effect of the change in average case mix weight at each level of therapy visits. The results were that .0205, or 38 percent (.0205/.0533=.38), of the total change in average case-mix weights from 2007 to 2008 was due to the shift in distribution of therapy visits per episode.

Figure 1 illustrates the 2007 through 2008 change in the proportion of episodes delivering each individual number of therapy visits. Several changes are notable. First, the percentage of episodes increased at the new, higher therapy visit thresholds (14–19 and 20+). The share of episodes at 20 visits or more increased from 4.4 percent in 2007 to 5.3 percent in 2008, a substantial increase of about 20 percent. The large shift towards therapy visit levels of 14 and higher was unexpected.

Second, the percentage of episodes at the single therapy threshold (10 visits) that existed before 2008 decreased, as did the percentage of episodes between 11 and 13 therapy visits. In 2007, as a proportion of all episodes with at least one therapy visit, episodes with 10 to 13 therapy visits were 32 percent; by 2008, only 21 percent of all therapy episodes were in this range. (Note: Figure 1 displays percents of total non-LUPA episodes, not just episodes with at least one therapy visit.) Third, the proportion of episodes at the new threshold below 10 visits, which is 6 visits, increased, as did the proportion of episodes with 7, 8, or 9 visits. The system of therapy steps we defined for the 2008 refinements included a step for 7–9 visits (*see* Table 4 of The August 29, 2007 final rule [72 FR 49762]). Finally, the proportion of total episodes receiving any therapy visits increased slightly, from 54 percent to 55 percent. The average number of therapy visits per episode increased from 5.63 to 5.83 (data not shown).

BILLING CODE 4120–01–P

Figure 1: Percent of Non-LUPA Episodes According to Number of Therapy Visits: 2007 vs. 2008

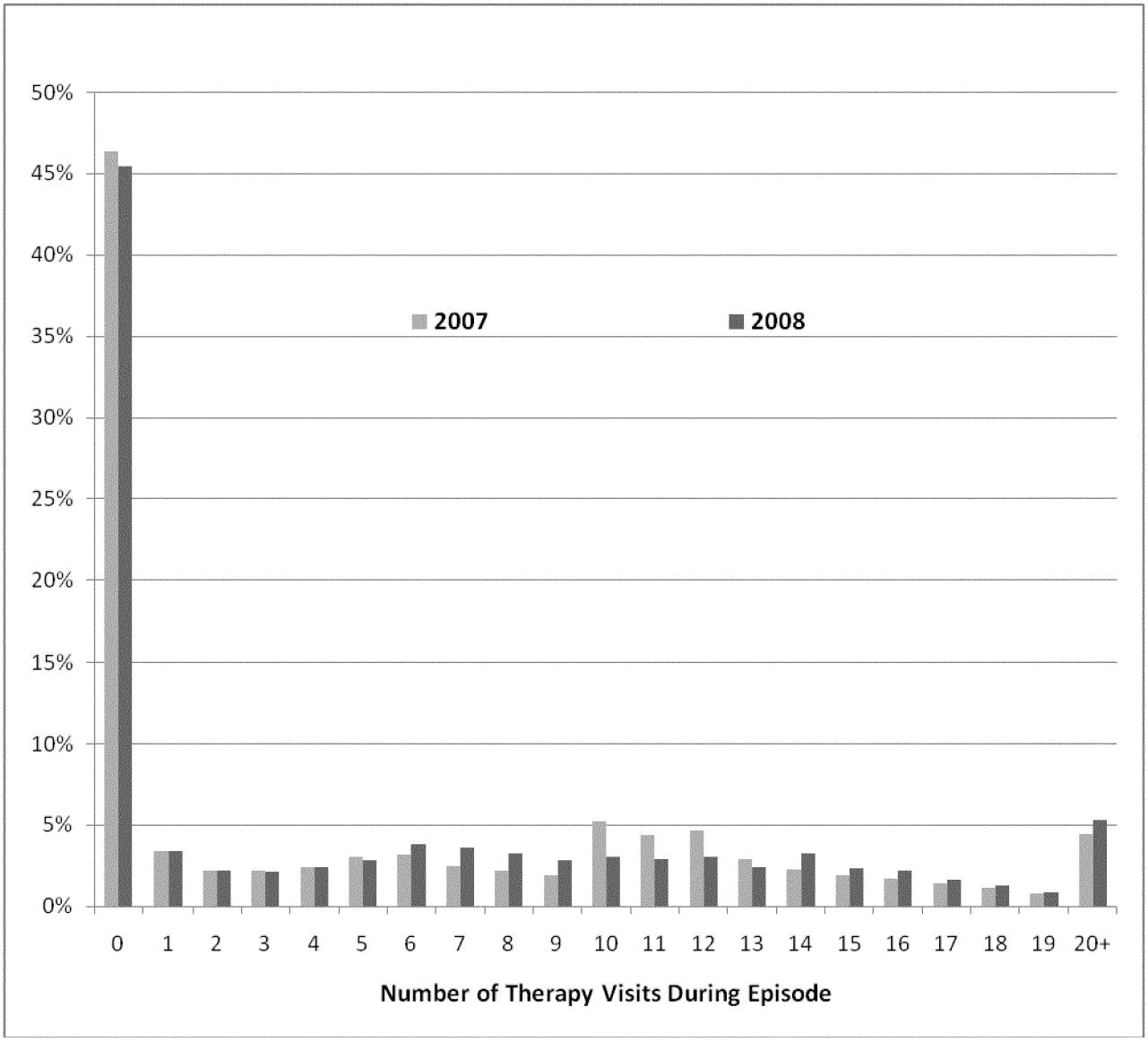

Note: Based on a 20 percent beneficiary sample. Episodes with no therapy visits serve patients who have needs for intermittent skilled nursing care but not for rehabilitation services.

BILLING CODE 4120–01–C

The remaining .0328, or 62 percent of the total change (.0328/.0533=.62) in overall average case-mix weight from 2007 to 2008 was due to an increase in the average case-mix weight at each level of therapy visits per episode. Table 1 shows the increases.

Table 1 Average Case Mix Weight According to Number of Therapy Visits, 2007 and 2008

Number of therapy visits per episode	2007 average	2008 average	Change	Percent change
0	0.8673	0.9022	0.0348	4.01%
1	0.8608	0.8847	0.0239	2.77%
2	0.8582	0.8817	0.0235	2.74%
3	0.8471	0.8739	0.0268	3.16%
4	0.8353	0.8645	0.0292	3.50%
5	0.8036	0.8378	0.0342	4.26%
6	1.0773	1.1205	0.0432	4.01%
7	1.2885	1.3338	0.0453	3.52%
8	1.2955	1.3350	0.0395	3.05%
9	1.3009	1.3345	0.0336	2.58%
10	1.5348	1.5575	0.0227	1.48%
11	1.7105	1.7400	0.0295	1.73%
12	1.7175	1.7435	0.0260	1.51%
13	1.7147	1.7461	0.0314	1.83%
14	2.0788	2.1197	0.0409	1.97%
15	2.0777	2.1112	0.0335	1.61%
16	2.2247	2.2586	0.0339	1.52%
17	2.2235	2.2494	0.0259	1.16%
18	2.3672	2.3946	0.0274	1.16%
19	2.3732	2.3940	0.0208	0.88%
20+	3.1177	3.1425	0.0248	0.80%

Note: Based on a 20% beneficiary sample. The HHRG grouping system effective January 1, 2008, was used to classify non-LUPA episodes of both annual samples into the 153-group case mix system for calculating average case mix weight.

The averages increased for all levels of therapy visits per episode, with the change ranging from 0.02 to 0.05. The percentage changes appear to decline with more therapy visits, because the level of the average case mix value increases with each number of therapy visits; however, there was no rising trend in the absolute change as the number of therapy visits increased.

Looking directly into the reporting of comorbidities, we examined the proportion of episodes that had nonblank diagnoses reported in M0240 (Diagnoses and Severity Index). Our concern was that agencies were reporting more comorbidities, since the refined system allocates case mix points for secondary diagnoses, whereas the system prior to the refinements did not. Longstanding OASIS manual language instructs providers to encode diagnosis on the OASIS only when the condition is unresolved and only when the condition has an impact on the home health care. The data comparing the percentages are shown in Table 2.

The results were a substantial increase in the percentage of episodes with a reported diagnosis code in M0240: A 10.4 percentage point increase from 2007–2008 in M0240d; a 16.4 percentage point increase in M0240e; and a 19.9 percentage point increase in M0240f. Table 2 also indicates that these changes represented a significantly larger increase in completion rates in these diagnosis fields compared to annual increases of about 3.0 percentage points in 2005–2006, and about 7.0 percentage points in 2006–2007. We note that we published the proposed refinements in the May 2007 **Federal Register** (72 FR 25356). Release of the proposal around mid-year could have been a factor in the higher growth of these episodes during the period 2006 through 2007, relative to 2005 through 2006.

We believe it is unlikely that the actual disease burden of home health patients, as indicated by reported comorbidities, changed so dramatically in a single year; instead, we believe the incentives to report more comorbidities under the refined case mix system are the reason for the large increases in reported comorbidities.

Table 2: Percentage of Episodes in Each Year Which have Non-Blank Entries For the Diagnosis Variable Listed

Year	M0240b	M0240c	M0240d	M0240e	M0240f
	%	%	%	%	%
2005	97.0%	87.4%	71.2%	52.2%	33.8%
2006	97.8%	89.8%	74.7%	55.6%	36.6%
2007	98.6%	93.0%	80.4%	62.8%	43.4%
2008	99.5%	97.2%	90.8%	79.2%	63.1%

Note: Based on a 20% beneficiary sample, including LUPA and non-LUPA episodes.

An illustrative instance of diagnosis coding change under the HH PPS refinements is hypertension. Our analysis of 8 years of claims shows that reporting of this diagnosis grew exceedingly quickly in 2008. Table 3 shows the proportion of HH PPS claims reporting essential hypertension, according to ICD–9–CM hypertension code, for 2001 to 2008. The data indicate a sudden jump of approximately 12 percentage points in reporting of unspecified hypertension when the refined HH PPS added hypertension as a case mix code in 2008. Annual changes in use of this code were small up until 2005 (in the range of 0.1 to 2.4 percentage points), after which there were two years of 6-percentage point increases, followed by the 12-percentage point increase coincident with the 2008 refinements. Malignant hypertension is unusual; it has been falling as a percentage of episodes. Reporting of benign hypertension, which is somewhat more common than malignant hypertension, has been slowly rising since 2001.

Table 3: Percent of episodes reporting hypertension
ICD9 diagnosis codes: 2001-2008

	ICD-9 401.0 malignant	ICD-9 401.1 benign	ICD-9 401.9 unspecified
2001	0.7	0.9	24.8
2002	0.8	1.1	26.0
2003	0.8	1.3	26.1
2004	0.6	2.0	25.3
2005	0.6	2.9	27.7
2006	0.5	3.4	33.9
2007	0.5	3.4	39.9
2008	0.5	3.8	52.1

Note: Based on a 10% beneficiary sample, including LUPA and non-LUPA episodes and excluding outlier episodes.

At the same time, there are indications that the services utilization associated with the most commonly reported hypertension diagnosis code, hypertension, unspecified, no longer is responsible for added resource requirements in home care. Originally, hypertension was selected for inclusion in the refined HH PPS system because data suggested it elevated utilization. Table 4a illustrates the trends; it shows the average number of visits per episode, according to type of hypertension diagnosis code. (We exclude outlier cases because of the effect that growing numbers of outlier episodes may have had beginning around 2005 and 2006; extremely large numbers of visits in the distribution can distort the average.)

Generally episodes reporting malignant or benign hypertension exhibit a decline in number of visits per episode during the middle of the 8-year

period. The averages then rise slightly. The averages for episodes reporting unspecified hypertension declined until 2005, and then stabilized.

Comparing these data with averages for episodes not reporting hypertension, we see that hypertension is generally associated with more visits, especially if the hypertension was reported as malignant or benign. However, in 2007, the unspecified hypertension episodes had an average number of visits equivalent to that of the non-HBP episodes. By 2008, the average number of visits for episodes not reporting hypertension rose slightly, while the average for unspecified hypertension did not. As a result, by 2008, the average number of visits for claims reporting unspecified hypertension is slightly lower than the average for claims not reporting hypertension. Further, the benign hypertension episodes, with a slightly increased share of the sample between 2007 and 2008, exhibited a small reduction in the average number of visits.

Table 4a: Annual mean number of visits, for hypertension-coded episodes: 2001-2008

	ICD-9 401.0 malignant	ICD-9 401.1 Benign	ICD-9 401.9 Unspecified	No hypertension
2001	18.2	18.1	17.6	16.8
2002	17.4	18.0	17.6	16.7
2003	17.5	17.3	17.2	16.4
2004	17.2	16.8	16.7	16.4
2005	16.7	15.9	16.0	15.9
2006	16.1	15.9	16.0	15.9
2007	16.5	16.3	16.0	16.0
2008	16.8	16.1	16.0	16.1

Note: Based on a 10% beneficiary sample, including LUPA and non-LUPA episodes and excluding outlier episodes.

This pattern illustrates an expected effect of nominal coding change. We observe a 12-percentage point increase in use of unspecified hypertension, but no longer do these hypertension patients use more resources than others. These results appear possibly consistent with a phenomenon in which agencies increased their reporting of hypertension in situations where it did not meet the home health diagnosis reporting criteria. More generally, the results are suggestive of changed coding practice in which less-severe episodes are being reported with hypertension in 2008 than used to be the case.

These analyses of the change in the therapy visit distribution, change in average case mix weights at each level of therapy visits, increased use of secondary diagnosis fields, and the change in reporting of hypertension all suggest that the refinements which were implemented in 2008 affected case-mix weights, with greater therapy visits and reporting of co-morbidities each as contributing factors. However, as described below, the analyses do not indicate a significant increase in real case-mix. Experience with previous analyses reported in our past regulations shows that relatively small proportions of the total case mix change since the IPS baseline can be considered real case mix change.

Our estimate that 10.07 percent of the total percentage change in the national average case mix weight since the IPS baseline is due to real change in case mix, is consistent with past results. Most of the case mix change has been due to improved coding, coding practice changes, and other behavioral responses to the prospective payment system, such as more use of high therapy treatment plans. We are therefore proposing to exercise authority to compensate for nominal case mix change by making reductions to the PPS rates, as we have done since 2008.

For this year's analysis, we used the same approach, a model designed to measure real change in case mix, which we developed for the CY 2008 HH PPS final rule (72 FR 49841) and continue to use for HH PPS rulemaking. For this year's analyses, we utilized a fuller version of the 3M APR–DRG grouper that allowed us to expand the number of APR–DRG-related groups in the model. As previously, we included indicators for each APR–DRG group's different severity level if at least 25 episodes had the APR–DRG/severity combination in the IPS period file. This expanded APR–DRG model was used to re-estimate the IPS period model of case-mix weight.

We also rebased the expanded APR–DRG model on CY2008 data, using case-mix weights produced by the refined (153-group) HH PPS grouper. One slight difference in the rebased model is that because we are using 2008 data, the "living arrangement" variables are missing on follow-up OASIS assessments. Consequently, we were not able to use this variable in the re-based model.

We used the results of that rebasing to predict real case mix for 2007. The national average case mix weight in 2008 was 1.3085. The rebased model of real case mix predicts a quantity change in real case mix of −0.0025 when working backwards from 2008 (1.3085) to 2007 (1.3060). The predicted level of real case mix in 2007, which we derived from the IPS-based model is 1.1152. To compute a predicted real case mix level for 2008, we increased the predicted level of real case mix in 2007, 1.1152, by the percentage growth (1.3085/1.3060) in real case mix that we estimated from the rebased model. The result is a predicted level of real case

mix in 2008 of 1.1173 ((1.3085/1.3060) × 1.1152 = 1.1173).

To compute the predicted quantity change in real case mix from the IPS baseline to 2008, we subtracted from the IPS baseline average case mix weight from the predicted level the real case mix in IPS, for a quantity change of 0.0214 (1.1173 − 1.0959 = 0.0214). The total difference in case mix from baseline to 2008 is 0.2126 (1.3085 − 1.0959 = 0.2126). Therefore, the quantity change from baseline to 2008 in real case mix represents a 10.07 percent increase (0.0214/0.2126 = 0.1007 or 10.07 percent).

The percent change in overall case mix from the IPS baseline to 2008 is 19.40 percent ((1.3085/1.0959) − 1 = 0.1940 or 19.40 percent). To estimate the percent growth in case mix due to nominal change (that is, change in case mix not due to actual changes in patient acuity), we reduced the overall 19.40 percent change in case mix by the 10.07 percent increase due to real case mix change, which yielded a residual of 17.45 percent ((1 − 0.1007) * 0.1940 = 0.1745).

As we fully described earlier in this proposed rule, our August 29, 2007, final rule for CY 2008 finalized a reduction over 4 years in the national standardized 60-day episode payments rates to account for an 11.75 percent increase in case-mix which was not related to treatment of more resource intense patients. The 11.75 percent increase was based on an analysis of data through 2005. We finalized a 2.75 percent reduction each year for 2008, 2009 and 2010, and 2.71 percent reduction for CY 2011 to account for this growth in case-mix. We have stated in HH PPS rulemaking, since the CY 2008 HH PPS proposed rule, that we might find it necessary to adjust the annual offsets (case-mix reduction percentages) as new data became available. Because our current analysis reveals that nominal case-mix has continued to grow, we are faced with having to account for the additional increase in nominal case-mix beyond that which was identified for CY 2008 rulemaking. If we were to account for the remainder of the 17.45 percent residual increase in nominal case-mix over CY 2011 and CY 2012, we estimate that the percentage reduction to the national standardized 60-day episode rates and the NRS conversion factor for nominal case-mix change for each of the two calendar years (2011 and 2012) of the case-mix change adjustment would be 3.79 percent per year. If we were to fully account for the remaining residual increase in nominal case-mix in CY 2011, we estimate that the percentage reduction to the national standardized 60-day episode rates and the NRS conversion factor would be 7.43 percent. Because the Affordable Care Act contains other provisions which have an effect on HH PPS payments, we are not proposing to account for the entire residual increase in nominal case-mix in CY 2011, instead we propose to account for the identified increase over CY 2011 and CY 2012. We propose to impose a 3.79 percent reduction per year to the national standardized 60-day episode rates and the NRS conversion factor for CY 2011 and CY 2012. Should we identify further increases in nominal case-mix as more current data become available, it is our intent to account fully for those increases when they are identified, rather than continuing to phase-in the reductions over more than 1 year. We will continue to monitor any future changes in case-mix as more current data become available and make updates as appropriate.

B. Hypertension Diagnosis Coding Under the HH PPS

As part of this rule, we are proposing to remove ICD–9–CM code 401.9, Unspecified Essential Hypertension, and ICD–9–CM code 401.1, Benign Hypertension, from the HH PPS case mix model's hypertension group, originally reflected in Table 2B of the August 29, 2007, CY 2008 HH PPS final rule (72 FR 49762) (subsequent updates to Table 2B have been provided in HH PPS grouper software releases). In this section we explain the basis for this proposal.

As part of our refinements to the HH PPS, beginning in CY 2008, unspecified hypertension and benign hypertension were included as diagnoses in our HH PPS case mix system. Recent analysis of home health diagnosis coding shows a significant change in the frequency of assigning certain hypertension diagnoses during CY 2008. Specifically, our analysis of HH PPS claims from 2001 to 2008 shows a sudden increase in the reporting of unspecified hypertension and benign hypertension on home health claims in CY 2008 (*see* Table 3: Percent of episodes reporting hypertension ICD–9–CM diagnosis codes: 2001–2008, of this proposed rule).

Classification of blood pressure (BP) was revised in 2003 by the National Heart, Lung and Blood Institute (NHLBI) in their "Seventh Report of the Joint National Committee on Prevention, Detection, Evaluation, and Treatment of High Blood Pressure" (the JNC 7 report) and published in the May 21, 2003, Journal of the American Medical Association. These revisions provided specific clinical guidelines for prevention, detection, and treatment of high blood pressure. The guidelines, approved by the Coordinating Committee of the NHLBI's National High Blood Pressure Education Program (NHBPEP), also streamlined the steps by which doctors diagnose and treat patients. A key aspect of the guidelines includes the introduction of a "pre-hypertension" level for individuals with a systolic blood pressure of 120–139 mm Hg or a diastolic blood pressure of 80–89 mm Hg. This recognition represented a change from traditional medical views on the implications of blood pressures slightly above 120/80. Traditionally, such low levels were not considered a significant clinical finding. No diagnosis was reportable. There was no medical treatment ordered; nor was a change of lifestyle recommended.

Based upon our review of the revised clinical guidelines, and our review of the ICD–9–CM classification of essential hypertension, if the patient is considered "pre-hypertensive," some may conclude that a diagnosis of benign hypertension may be assigned. If an individual is designated as pre-hypertensive, the guidelines stipulate that this individual will generally require health promoting lifestyle modifications to prevent cardiovascular disease. Additional treatments may or may not be appropriate.

The impact of the new guidelines for hypertension is the reclassification of certain patients to a hypertension diagnosis, whereas prior to the guidelines, no hypertension diagnosis was indicated. Furthermore, under the guidelines, some of the patients deemed hypertensive may not need skilled services. Moreover, as we described above, we see a substantial increase in the reporting of unspecified hypertension, along with some evidence that home health patients with either unspecified or benign hypertension no longer require extra resources. Given the new guidelines for hypertension and their impact on coding, along with coding behavior changes in 2008, we believe including unspecified and benign hypertension in the HH PPS case mix model reduces the model's accuracy. As such we do not believe that we should be including these diagnoses in our case-mix system.

We also believe that the developments in clinical guidelines of recent years may have led to ambiguity in the definition of hypertension in the ICD–9–CM classification system. The "ICD–9–CM Official Guidelines for Coding and Reporting", and the alphabetic and tabular indexes of the ICD–9–CM published after May 2003 (effective date

of the "NHLBI Guidelines for Hypertension"), fail to include the NHLBI Blood Pressure (BP) guidelines and classification terminology. The NHLBI specific BP mmHg measurements and BP terms are not included in the ICD–9–CM classification system.

In the August 29, 2007, CY 2008 HH PPS final rule, we removed diagnosis codes proposed in the NPRM if the code was assigned to a minor condition or mild symptom that may be found in the elderly population; codes that are non-specific or ambiguous; and codes that lack consensus for clear diagnostic criteria within the medical community. Due to their unclear relationship with NHLIB guidelines, the unspecified and benign hypertension codes fail to meet the criteria we laid out in 2007.

In summary, continued inclusion of the unspecified and benign hypertension codes in the HH PPS case mix system threatens to move the HH PPS case-mix model away from a foundation of reliable and meaningful diagnosis codes that are appropriate for home care. Therefore, we are proposing to remove ICD–9–CM code 401.9, Unspecified Essential Hypertension, and ICD–9–CM code 401.1, Benign Essential Hypertension, from the HH PPS case mix model's hypertension group, in order to correlate with the goals of our HH PPS case-mix system.

C. Therapy Coverage Requirements

With the inception of the HH PPS, as set forth in the July 3, 2000 final rule (65 FR 41128), patients were grouped according to their therapy utilization status in order to ensure that patients who required therapy would maintain access to appropriate services. In the final rule, we described that we had performed research regarding how to use assessment information to predict how much therapy a patient would need over the course of a 60-day period. The research found that the assessment data could not predict the amount of required therapy with sufficient accuracy for use in the payment system. Knowing that under a PPS there is significant risk that providers might skimp on high-cost services such as therapy, we decided to establish a therapy threshold to ensure that therapy would not be under-provided. We used clinical judgment to determine what amount of therapy would need to be provided to ensure a meaningful amount of rehabilitation services to patients who could clearly benefit from it. We determined that this amount would be at least 8 hours of therapy services during the 60-day episode. Since the average therapy visit was 48 minutes long, it would take 10 visits to provide at least 8 hours worth of therapy. Therefore, we established a corresponding 10-visit therapy threshold to identify "high" therapy cases, and paid home health agencies significantly more for patients receiving high therapy.

In the years following the adoption of the HH PPS, we have continued to analyze the effectiveness of the 10-visit therapy threshold in ensuring that rehabilitation services were being provided to patients who could clearly benefit from them. Our analyses suggested that therapy was not being under-provided, but rather suggested that in many cases therapy was being over-provided. As described in the May 4, 2007 HH PPS proposed rule (72 FR 25356), our analysis of the evidence suggested that the single 10-visit threshold offered too strong a financial incentive to provide 10 therapy visits when a lower amount of therapy was more clinically appropriate. In other words, the data suggested that financial incentives to provide 10 therapy visits overpowered clinical considerations in therapy prescriptions. During this time we conducted further research to model therapy need, but it was again unsuccessful. We explained in our proposed rule in May 2007 that a return to per-visit payment for therapy visits did not meet our objectives for having a prospective payment system. Therefore, in the CY 2008 final rule, we established a system of three thresholds with graduated steps in between which met our objectives of retaining prospectivity in the payment system, reducing the strong incentive resulting from a single threshold, restoring clinical considerations in therapy provision, and paying more accurately for therapy utilization below the original 10-visit threshold. Those three thresholds are at 6 therapy visits, 14 therapy visits, and 20 therapy visits. As a disincentive for agencies to deliver more than the appropriate, clinically determined number of therapy visits, payment for additional therapy visits between the three thresholds increases gradually, incorporating a declining rather than a constant payment amount per added therapy visit. In our May 4, 2007 HH PPS proposed rule, at 72 FR 25363, we provided further details explaining the selection of these thresholds.

Analysis of CY 2008 data continues to suggest that some HHAs may be providing unnecessary therapy. The 2008 data show a 30 percent increase in episodes with between 6–9 therapy visits, which suggests that the 2008 changes may have been successful in improving clinical considerations in the volume of therapy provided. In their March 2010 report MedPAC states that 2008 data also reveal a 26 percent increase of episodes with 14 or more therapy visits (MedPAC, *Report to Congress: Medicare Payment Policy,* Section B, Chapter 3, March 2010, p. 203). The increase in episodes with 14 or more therapy visits is especially evident in areas of the country where home health fraud is suspected, such as Miami-Dade, Florida.

While this suggests that the therapy payment policies are vulnerable to fraud and abuse, the swift, across-the-board therapy utilization changes suggest another, more fundamental concern. MedPAC wrote that the magnitude of therapy utilization changes and their correlations with the payment threshold changes suggest that payment incentives continue to influence treatment patterns [MedPAC, 2010, p. 206]. The Commissioners believed that payment policy is such a significant factor in treatment patterns because the criteria for receipt of the home health benefit are ill-defined. They suggested that improved guidelines that more specifically identify patients who are most appropriate for HH care would facilitate more appropriate and uniform use of the benefit [MedPAC, 2010, p. 203]. To address the concerns of MedPAC, we are proposing to clarify our policies regarding coverage of therapy services at 409.44(c) in order to assist HHAs, and to curb misuse of the benefit.

We believe these clarifications also could slow the case-mix growth which is unrelated to real changes in patient acuity (nominal case-mix). As we described above in Section A ("Case Mix Measurement"), between 2007 and 2008 we observed a case-mix increase of more than 4 percent. An analysis of this growth revealed that approximately 38 percent of the total case mix change between 2007 and 2008 was due to the shift in distribution of therapy visits. By describing more clearly the therapy coverage criteria in the home health setting, thereby enabling providers to better understand when providing therapy to home health patients is appropriate, we believe that beginning in calendar year 2011, a slower rate of nominal case-mix growth may be achieved.

Proposed Clarifications to 42 CFR 409.44(c)(1)

Regulations at § 409.44(c)(1) mandate that for physical therapy, speech language pathology, or occupational therapy to be covered under the home health benefit, therapy services must

relate directly and specifically to a treatment regimen, be established by the physician (after any needed consultation with a qualified therapist), that is designed to treat the beneficiary's illness or injury. A qualified therapist is one who meets the personnel requirements in the CoPs at 42 CFR 484.4. To ensure that therapy services relate directly and specifically to a treatment regimen designed to treat the beneficiary's illness or injury, we are proposing to clarify our coverage requirements. Specifically, we are proposing to revise § 409.44(c)(1) so that, with respect to physical therapy, occupational therapy, and speech language pathology, we may clarify that:

- The patient's plan of care would include a course of therapy and therapy goals which would be consistent with the patient's functional assessment, both of which are included in the patient's clinical record. The patient's clinical record would document the necessity for the course of therapy described in the plan of care. Specifically, the clinical record would document how the course of therapy for the beneficiary's illness or injury is in accordance with accepted standards of clinical practice.
- Therapy treatment goals would be described in the plan of care, and they would be measurable. Specifically, therapy treatment goals would be such that progress toward those goals could be objectively measured. The goals would also pertain directly to the patient's illness or injury and the patient's resultant functional impairments.
- The patient's clinical record would demonstrate that the method used to assess a patient's function included the objective measurement of function in accordance with accepted standards of clinical practice. As such, successive functional assessments would enable comparison of successive measurements, thus enabling objective measurement of therapy progress.

One example of objective measures is functional assessment individual item and summary findings (and comparisons to prior assessment results/clinical findings) from OASIS functional items or other commercially available therapy outcomes instruments. Similarly, another example would be functional assessment findings (and comparisons to prior assessment results/clinical findings) from tests and measurements validated in the professional literature, or used as part of accepted standards of clinical practice that are appropriate for the condition/function being measured.

Proposed Clarifications to 42 CFR 409.44(c)(2)(i)

Current regulations at § 409.44(c)(2)(i) mandate that for physical therapy, speech language pathology, or occupational therapy services to be covered in the home health setting, the services must be considered under accepted practices to be a specific, safe, and effective treatment for the beneficiary's condition.

To clarify what we mean by "accepted practice" and "effective treatment", we are proposing to clarify home health therapy coverage criteria at § 409.44(c)(2)(i). These clarifications describe our expectations that HHAs would regularly reassess a therapy patient's physical function, and would objectively measure a patient's progress toward therapy goals to determine whether therapy services continued to be effective, or whether therapy ceased to be covered. These clarifications also describe clinical record documentation expectations associated with documenting effective therapy progress.

We are proposing to revise § 409.44(c)(2)(i) as follows:

Functional Reassessment Expectations

In order to ensure that a patient receiving home health therapy services appropriately remained eligible for the benefit in accordance with accepted practice, and that the services continued to be effective, the patient's function would be periodically reassessed by a qualified therapist. As we described above, for therapy to be covered in the home health setting, the method used to assess a patient's function would include objective measurement of function in accordance with accepted standards of clinical practice. As such, progress toward therapy goals would be objectively measurable by comparing measurements obtained at successive functional assessment time points. The objective measurements obtained from the periodic reassessment of function would reflect progress (or lack of progress) toward therapy goals, or achievement of therapy goals and the measurements would be documented in the clinical record.

While a qualified therapist could include, as part of the functional assessment or reassessment, objective measurements or observations made by a PTA or OTA within their scope of practice, the qualified therapist would have to actively and personally participate in the functional assessment, and measure the patient's progress.

- For those patients requiring 13 or 19 therapy visits, the patient would be functionally re-assessed by a qualified therapist, minimally, on the 13th and the 19th therapy visit (thus requiring reassessment prior to the HH PPS therapy thresholds of 14 and 20 therapy visits), and at least every 30 days.
- No subsequent therapy visits would be covered until the qualified therapist has completed the reassessment, objectively measured progress (or lack of progress) toward goals, determine if goals have been achieved or require updating, and documented the therapy progress in the clinical record. If the objective measurements of the reassessment do not reveal progress toward goals, the qualified therapist, together with the physician, would determined whether the therapy is still effective or should be discontinued. If therapy is continued, the clinical record would be documented, as described below, with a clinically supportable statement of why there is an expectation that anticipated improvement is attainable in a reasonable and generally predictable period of time.

These reassessments would ensure that the patient was receiving effective care while also ensuring that, except for covered maintenance therapy as described later in this section, patients were not remaining on the benefit and continuing to receive therapy services after the therapy goals were met, or after improvement could no longer be expected.

Documenting "Effective" Therapy Progress

Assistant's Participation in Documenting "Effective" Therapy Progress

We are proposing that physical therapist assistants or occupational therapy assistants could objectively document progress between the functional reassessments by a qualified therapist and/or physician. Clinical notes written by assistants are not complete functional assessments of progress.

Only a qualified therapist would be able to document a patient's progress towards goals as measured during a functional reassessment, regardless of whether the assistant wrote other clinical notes. However, notes written by assistants are part of the clinical record and need not be copied into the reassessment documentation. Clinical notes written by assistants would supplement the functional reassessment documentation of qualified therapist and would include:

- The date that the clinical note was written; the assistant's signature and job title, or for dictated documentation, the identification of the assistant who

composed the clinical note, and the date on which it was dictated;

• Objective measurements (preferred) or description of changes in status relative to each goal currently being addressed in treatment, if they occurred. Note that assistants would not make clinical judgments about why progress was or was not made, but could report the progress objectively.

Descriptions would make identifiable reference to the goals in the current plan of care.

Qualified Therapist's Responsibility in "Effective" Progress Documentation

In addition to the proposed requirements above for clinical documentation by assistants, we are also proposing in § 409.44(c)(2)(i) that the patient's progress documentation by a qualified therapist would also include:

• Documentation of objective measurement obtained during the functional assessment and extent of progress (or lack thereof) toward each therapy goal.

• Plans for continuing or discontinuing treatment, with reference to evaluation results, and/or treatment plan revisions.

• Changes to goals or an updated plan of care that is sent to the physician for signature or for discharge.

• Documentation of objective evidence or a clinically supportable statement of expectation that: (1) The patient's condition has the potential to improve or is improving in response to therapy; or (2) maximum improvement is yet to be attained, and there is an expectation that the anticipated improvement is attainable in a reasonable and generally predictable period of time. Objective evidence would consist of standardized patient assessments, outcome measurement tools, or measurable assessments of functional outcome. Use of objective measures at the beginning of treatment, and during and/or after treatment would be required to quantify progress and support justifications for continued treatment.

Proposed Clarifications to 42 CFR 409.44(c)(2)(iii)

Regulations at § 409.44(c)(2)(iii) presently mandate that for therapy services to be covered in the home health setting, there must be an expectation that the beneficiary's condition will improve materially in a reasonable (and generally predictable) period of time based on the physician's assessment of the beneficiary's restoration potential and unique medical condition, or the services must be necessary to establish a safe and effective maintenance program required in connection with a specific disease, or the skills of a therapist must be necessary to establish a safe and effective maintenance program in connection with a specific disease or the skills of a therapist must be necessary to perform a safe and effective maintenance program. We would clarify these requirements:

• The first sentence currently states, "There must be an expectation that the beneficiary's condition will improve materially in a reasonable (and generally predictable) period of time based on the physician's assessment of the beneficiary's restoration potential and unique medical condition."

We propose clarifying the regulatory text to clarify that "material" improvement requires that the clinical record demonstrate that the patient is making functional improvements that are ongoing and of practical value, when measured against his or her condition at the start of treatment.

We are proposing to clarify that the concept of rehabilitative therapy includes recovery or improvement in function and, when possible, restoration to a previous level of health and well-being.

Covered therapy services under the home health benefit shall be rehabilitative therapy services unless they meet the criteria for maintenance therapy requiring the skills of a therapist as described below.

We are proposing to clarify the regulatory text so that if an individual's expected rehabilitation potential would be insignificant in relation to the extent and duration of therapy services required to achieve such potential, therapy would not be considered reasonable and necessary, and therefore would not be covered as rehabilitative therapy services.

We are also proposing to clarify the regulatory text to describe that therapy is covered as rehabilitative therapy when the skills of a therapist are necessary to safely and effectively furnish or supervise a recognized therapy service whose goal is improvement of an impairment or functional limitation.

We are proposing to clarify in regulatory text that therapy would not be covered to effect improvement or restoration of function where a patient suffered a transient and easily reversible loss or reduction of function (*e.g.,* temporary weakness which may follow a brief period of bed rest following surgery) which could reasonably be expected to improve spontaneously as the patient gradually resumes normal activities. Therapy furnished in such situations would not be considered reasonable and necessary for the treatment of the individual's illness or injury, and the services would not be covered.

If at any point in the treatment of an illness, it was determined that the treatment was not rehabilitative and did not legitimately require the services of a qualified therapist for management of a maintenance program as described below, the services would no longer be considered reasonable and necessary and therapy would cease to be covered.

• As currently stated, § 409.44(c)(2)(iii) also covers occupational therapy, physical therapy, or speech language pathology if the services are "necessary to establish a safe and effective maintenance program required in connection with a specific disease."

We are proposing to clarify the existing regulatory text by adding that the specialized skill, knowledge and judgment of a therapist would be required in developing a maintenance program, and services would be covered to design or establish the plan, to ensure patient safety, to train the patient, family members and/or unskilled personnel in carrying out the maintenance plan, and to make periodic reevaluations of the plan.

When indicated, during the last visit(s) for rehabilitative treatment, the clinician may develop a maintenance program for the patient. The goals of a maintenance program would be, for example, to maintain functional status or to prevent decline in function.

We are also proposing to clarify that if a maintenance program was initiated after the rehabilitative therapy program had been completed (rather than by a clinician at the last rehabilitative therapy session), development of a maintenance program would not be considered reasonable and necessary for the treatment of the patient's condition, with one exception. We propose that when a patient qualifies for Medicare's home health benefit based on an intermittent skilled nursing need, a qualified therapist may develop a maintenance program to maintain functional status or to prevent decline in function, at any point in the episode.

The services of a qualified therapist would not be necessary to carry out a maintenance program, and would not be covered under ordinary circumstances. The patient could perform such a program independently or with the assistance of unskilled personnel or family members.

We also are proposing to clarify circumstances under which CMS would cover therapy services for carrying out

a maintenance program. If the clinical condition of the patient were such that the services required to maintain function involved the use of complex and sophisticated therapy procedures to be delivered by the therapist himself/herself (and not an assistant) in order to provide both a safe and effective maintenance program and to ensure patient safety, those reasonable and necessary services would be covered, even if the skills of a therapist were not ordinarily needed to carry out the activities performed as part of the maintenance program.

Clarifications to § 409.44(c)(2)(iv)

In order to clarify § 409.44(c)(2)(iv), which mandates that for therapy to be covered in the home health setting, the amount, frequency, and duration of the services must be reasonable, we propose to revise § 409.44(c)(2)(iv) to require that:

- The amount, frequency and duration of therapy services must be reasonable and necessary, as determined by a qualified therapist and/or physician, using accepted standards of clinical practice.
- The plan of care or the functional assessment would include any variable factors that influence the patient's condition or affect the patient's response to treatment, especially those factors that influence the clinician's decision to provide more services than are typical for the patient's condition.
- The clinical record documentation would have to include objective measurements that demonstrated that the patient was making progress toward goals. If progress could not be measured, and continued improvement cannot be expected, therapy services would cease to be covered, with two exceptions. First, therapy could still be considered reasonable and necessary (and thus covered) if therapy progress regressed or plateaued, if the reason(s) for lack of progress were documented, and the justification supporting the expectation that progress would be regained and maintained with continued therapy was also documented. Second, therapy could be considered reasonable and necessary (and thus covered) under specific circumstances when maintenance therapy is established or provided, as explained previously in this section.

D. Collecting Additional Claims Data for Future HH PPS Enhancements and Soliciting Comments on HH PPS Improvements

The 2009 MedPAC report recommended that CMS improve the HH PPS to mitigate vulnerabilities such as payment incentives to provide unnecessary services. We believe that we need more specific resource use data to fully address these vulnerabilities. Therefore, we are planning to require HHAs to report additional data on the HH claim beginning in CY 2011. Data collection requirements are handled via a separate administrative process, and are not part of this rulemaking.

In their March 2010 report, MedPAC suggested that the HH PPS case-mix weights needed adjustment. Our current therapy weights are calibrated assuming that 79 percent of the time, HH therapy is provided by therapists. We believe that the current mix of therapy services may have changed. To ensure we accurately update the case-mix weights, we believe there is a need to collect additional data on the HH claim to differentiate between the therapy visits provided by therapy assistants versus therapists.

We typically consider skilled nursing services to involve direct skilled nursing care to a patient, and therapy services to be restorative therapy. However, in limited situations, regulations deem a set of nursing services which are not direct care skilled nursing as skilled services and also deem a set of therapy services which are not restorative therapy as skilled therapy. Therefore, we are planning to require HHAs to report additional data on the HH claim to differentiate between these deemed skilled services and direct care skilled nursing or restorative therapy. We believe that these data will help us better understand services provided, enabling us to more accurately address overutilization vulnerabilities.

Currently, we use the following G-codes to define therapy services in the home health setting:

- *G0151* Services of physical therapist in home health setting, each 15 minutes.
- *G0152* Services of an occupational therapist in home health setting, each 15 minutes.
- *G0153* Services of a speech-language pathologist in home health setting, each 15 minutes.

We are planning to revise the current definitions for existing G-codes for physical therapists (G0151), occupational therapists (G0152), and speech-language pathologists (G0153), to include in the descriptions that they are intended for the reporting of services provided by a qualified physical or occupational therapist or speech-language pathologist. A qualified therapist is one who meets the personnel requirements in the CoPs at 42 CFR 484.4. Additionally, we are planning to require the reporting of two additional G-codes to report the delivery of therapy services by assistants. The following are draft descriptions for those revised and new G-codes, for the reporting of restorative therapy visits by qualified therapists and qualified assistants. Since these new G-codes do not yet exist, we have entitled all the new G-codes as G-CodeX, with the 'X' being a number to indicate which new code.

- *G0151* Services performed by a qualified physical therapist in the home health setting, each 15 minutes.
- *G0152* Services performed by a qualified occupational therapist in the home health setting, each 15 minutes.
- *G0153* Services performed by a qualified speech-language pathologist in the home health setting, each 15 minutes.
- *G-Code1* Services performed by a qualified physical therapist assistant in the home health setting, each 15 minutes.
- *G-Code2* Services performed by a qualified occupational therapist assistant in the home health setting, each 15 minutes.

We are also planning to require new G-codes for the reporting of the establishment or delivery of therapy maintenance programs by qualified therapists. The following are draft descriptions for those new G-codes, for the reporting of the establishment or delivery of therapy maintenance programs by therapists:

- *G-Code3* Services performed by a qualified physical therapist, in the home health setting, in the establishment or delivery of a safe and effective therapy maintenance program, each 15 minutes.
- *G-Code4* Services performed by a qualified occupational therapist, in the home health setting, in the establishment or delivery of a safe and effective therapy maintenance program, each 15 minutes.
- *G-Code5* Services performed by a qualified speech-language pathologist, in the home health setting, in the establishment or deliver of a safe and effective therapy maintenance program, each 15 minutes.

Currently we use the following G-code for the reporting of skilled nursing services in the home:

- *G0154* Skilled services of a nurse in the home health setting, each 15 minutes.

We are planning to revise the current definition for the existing G-code for skilled nursing services (G0154), and require HHAs to use G0154 only for the reporting of direct skilled nursing care to the patient by a licensed nurse. Additionally, we are planning to require two new G-codes: One for the reporting

of the skilled services of a licensed nurse in the management and evaluation of the care plan or the observation and assessment of a patient's conditions when only the specialized skills of a licensed nurse can determine the patient's status until the treatment regimen is essentially stabilized; and another for the reporting of the training or education of a patient, a patient's family, or caregiver:

- *G0154* Skilled services of a licensed nurse in the home health setting, each 15 minutes.
- *G-Code6* Skilled services by a licensed nurse, in the delivery of management & evaluation of the plan of care, or the observation and assessment of the patient's condition while a patient's treatment regime is stabilized, in the home health setting, each 15 minutes.
- *G-Code7* Skilled services of a licensed nurse, in the training and/or education of a patient or family member, in the home health setting, each 15 minutes.

In addition to our plans for collecting additional claims data for future HH PPS enhancements, we are considering other possible changes to the HH PPS. As such, we are also soliciting comments on options to restructure the HH PPS to mitigate the overutilization and up-coding risks that current data suggest. Specifically, we are soliciting comments on possible policy options such as using the new claims data to better account for therapy resource use and limiting the use of co-morbid conditions in payment algorithms.

E. Outlier Policy

1. Background

Section 1895(b)(5) of the Act allows for the provision of an addition or adjustment to the regular 60-day case-mix and wage-adjusted episode payment amounts in the case of episodes that incur unusually high costs due to patient home health care needs. Prior to the enactment of The Affordable Care Act, this section stipulated that total outlier payments could not exceed 5 percent of total projected or estimated HH payments in a given year. Under the HH PPS, outlier payments are made for episodes for which the estimated costs exceed a threshold amount. The wage adjusted fixed dollar loss (FDL) amount represents the amount of loss that an agency must absorb before an episode becomes eligible for outlier payments. As outlined in our FY 2000 HH PPS final rule (65 FR 41188–41190), we provided for outlier payments projected to not exceed 5 percent of total payments and we adjusted the payment rates accordingly.

2. Regulatory Update

In our November 10, 2009 HH PPS final rule for CY 2010 (74 FR 58080–58087), we explained that our analysis revealed excessive growth in outlier payments in a few discrete areas of the country. Despite program integrity efforts associated with excessive outlier payments in targeted areas of the country, we discovered that outlier expenditures exceeded the 5 percent statutory limit. Consequently, we assessed the appropriateness of taking action to curb outlier abuse.

In order to mitigate possible billing vulnerabilities associated with excessive outlier payments, and to adhere to our statutory limit on outlier payments, we adopted an outlier policy that included a 10 percent agency level cap on outlier payments in concert with a reduced FDL ratio of 0.67. This resulted in a projected target outlier pool of approximately 2.5 percent (the previous outlier pool was 5 percent of total HH expenditures). For CY 2010, we first returned 5 percent back into the national standardized 60-day episode rates, the national per-visit rates, the LUPA add-on payment amount, and the NRS conversion factor. Then we reduced the CY 2010 rates by 2.5 percent to account for the new outlier pool of 2.5 percent. This outlier policy was adopted for CY 2010 only.

3. Statutory Update

Section 3131(b)(1) of the The Affordable Care Act amended Section 1895(b)(3)(C), "Adjustment for outliers"; that subparagraph now reads, "The Secretary shall reduce the standard prospective payment amount (or amounts) under this paragraph applicable to home health services furnished during a period by such proportion as will result in an aggregate reduction in payments for the period equal to 5 percent of the total payments estimated to be made based on the prospective payment system under this subsection for the period." In addition, Section 3131(b)(2) of The Affordable Care Act amends Section 1895(b)(5) of the Act by taking the existing language, re-designating it as 1895(b)(5)(A) of the Act, and revising it such that it states that the Secretary, "may provide for an addition or adjustment to the payment amount otherwise made in the case of outliers because of unusual variations in the type or amount of medically necessary care. The total amount of the additional payments or payment adjustments made under this paragraph with respect to a fiscal year or year may not exceed 2.5 percent of the total payments projected or estimated to be made based on the prospective payment system under this subsection in that year." As such, we are required to implement a HH PPS outlier policy whereby we reduce the standard episode payment by 5 percent, and target up to 2.5 percent of total projected estimated HH PPS payments to be paid as outlier payments. We would first return the 2.5 percent that we took out of the national standardized 60-day episode rates, the national per-visit rates, the LUPA add-on payment amount, and the NRS conversion factor for CY 2010 that paid for the CY 2010 outlier pool of 2.5 percent. We will then reduce those rates by 5 percent as required by Section 1895(b)(3)(C) of the Act as amended by Section 3131(b)(1) of The Affordable Care Act. For CY 2011 and subsequent calendar years, the total amount of the additional payments or payment adjustments made may not exceed 2.5 percent of the total payments projected or estimated to be made based on the prospective payment system in that year as required by Section 1895(b)(5)(A) of the Act as amended by Section 3131(b)(2)(B) of The Affordable Care Act.

4. Outlier Cap

As stated earlier, for CY 2010 only, we capped home health outlier payments at a maximum of 10 percent per agency (74 FR 58080–58087). Section 3131(b)(2)(C) of The Affordable Care Act adds a paragraph, (B) "Program Specific Outlier Cap", to Section 1895(b)(5) of the Act. The new paragraph states, "The estimated total amount of additional payments or payment adjustments made * * * with respect to a home health agency for a year (beginning with 2011) may not exceed an amount equal to 10 percent of the estimated total amount of payments made under this section * * * with respect to the home health agency for the year." Therefore, the 10 percent per agency outlier cap would continue in CY 2011 and subsequent calendar years as required by section 1895(b)(5)(B) of the Act as amended by section 3131(b)(2)(C) of The Affordable Care Act. Section 3131(b) requires that we (1) Reduce the standard payment rates by 5 percent, (2) pay no more than 2.5 percent of total estimated payments for outliers, and (3) apply a 10% agency aggregate outlier cap.

5. Loss-Sharing Ratio and Fixed Dollar Loss Ratio

The July 2000 final rule (65 FR 41189) described a methodology for determining outlier payments. Under this system, outlier payments are made

for episodes whose estimated cost exceeds a threshold amount. The episode's estimated cost is the sum of the national wage-adjusted per-visit rate amounts for all visits delivered during the episode. The outlier threshold is defined as the national standardized 60-day episode payment rate for that case-mix group plus a fixed dollar loss (FDL) amount. Both components of the outlier threshold are wage-adjusted. The wage adjusted FDL amount represents the amount of loss that an agency must experience before an episode becomes eligible for outlier payments. The wage adjusted FDL amount is computed by multiplying the national standardized 60-day episode payment amount by the FDL ratio, and wage-adjusting that amount. That wage-adjusted FDL amount is added to the HH PPS payment amount to arrive at the wage adjusted outlier threshold amount.

The outlier payment is defined to be a proportion of the wage-adjusted estimated costs beyond the wage-adjusted outlier threshold amount. The proportion of additional costs paid as outlier payments is referred to as the loss-sharing ratio. The FDL ratio and the loss-sharing ratio were selected so that the estimated total outlier payments would not exceed the 5 percent level. We chose a value of 0.80 for the loss-sharing ratio, which is relatively high, but preserves incentives for agencies to attempt to provide care efficiently for outlier cases. With a loss-sharing ratio of 0.80, Medicare pays 80 percent of the additional costs above the wage-adjusted outlier threshold amount. A loss-sharing ratio of 0.80 is also consistent with the loss-sharing ratios used in other Medicare PPS outlier policies, such as inpatient hospital, inpatient rehabilitation, long-term hospital, and inpatient psychiatric payment systems. As discussed in the October 1999 proposed rule (64 FR 58169) and the July 2000 final rule (65 FR 41189), the percentage constraint on total outlier payments creates a tradeoff between the values selected for the FDL amount and the loss-sharing ratio. For a given level of outlier payments, a higher FDL amount reduces the number of cases that receive outlier payments, but makes it possible to select a higher loss-sharing ratio and therefore increase outlier payments per episode. Alternatively, a lower FDL amount means that more episodes qualify for outlier payments but outlier payments per episode must be lower.

Therefore, setting these two parameters involves policy choices about the number of outlier cases and their rate of payment. In the CY 2010 HH PPS final rule (74 FR 58086), we implemented a FDL ratio of 0.67.

For this proposed rule, we have updated our analysis from the CY 2010 HH PPS final rule and we estimate that maintaining a FDL ratio of 0.67, in conjunction with a 10 percent cap on outlier payments at the agency level, would pay no more than the 2.5 percent target of outlier payments as a percentage of total HH PPS payments as required by Section 1895(b)(5)(A) of the Act, as amended by section 3131(b)(2)(B) of The Affordable Care Act.

6. Solicitation of Comments Regarding Imputed Costs

The Affordable Care Act requires CMS to conduct a study which includes analysis of ways outlier payments might be revised to reflect costs of treating Medicare beneficiaries. CMS will produce a Report to Congress containing this study's recommendations no later than March 1, 2014.

To consider outlier policy improvements in the nearer term we are soliciting comments regarding alternate policy options and the methodologies to better account for high cost patients. In particular, we would like the industry's input on alternatives to how we impute costs in the calculation of the outlier payments.

We have discussed and are exploring the possible use of visit intensity data in the imputing of costs as part of the outlier payment calculation and would be interested in the industry's views on such an alternative. In addition, we would like to receive feedback concerning the use of diagnoses codes (for example, diabetes) as a factor to be used to calculate the imputed costs associated with outlier payments. We believe that to modifying the fixed dollar loss ratio or the loss sharing ratio, at this point in time, would not improve the current policy, but we solicit industry comments on this as well.

F. Proposed CY 2011 Rate Update

1. Home Health Market Basket Update

Section 1895(b)(3)(B) of the Act requires for CY 2011 that the standard prospective payment amounts be increased by a factor equal to the applicable home health market basket update for those HHAs that submit quality data as required by the Secretary. Section 3401(e) of The Affordable Care Act amended section 1895(b)(3)(B) of the Act by adding a new clause (vi) which states, "After determining the home health market basket percentage increase * * * the Secretary shall reduce such percentage * * * for each of 2011, 2012, and 2013, by 1 percentage point. The application of this clause may result in the home health market basket percentage increase under clause (iii) being less than 0.0 for a year, and may result in payment rates under the system under this subsection for a year being less than such payment rates for the preceding year."

The proposed HH PPS market basket update for CY 2011 is 2.4 percent. This is based on Global Insight Inc.'s first quarter 2010 forecast, utilizing historical data through the fourth quarter of 2009. A detailed description of how we derive the HHA market basket is available in the CY 2008 Home Health PPS proposed rule (72 FR 25356, 25435). Due to the new requirement at section 1895(b)(3)(B)(vi) of the Act, the proposed CY 2011 market basket update of 2.4 percent must be reduced by 1 percentage point to 1.4 percent. In effect, the proposed CY 2011 market basket update becomes 1.4 percent. The law does not permit us to exercise any discretion with respect to the application of this reduction.

2. Home Health Care Quality Improvement

a. OASIS

Section 1895(b)(3)(B)(v)(II) of the Act requires that "each home health agency shall submit to the Secretary such data that the Secretary determines are appropriate for the measurement of health care quality. Such data shall be submitted in a form and manner, and at a time, specified by the Secretary for purposes of this clause." In addition, section 1895(b)(3)(B)(v)(I) of the Act dictates that "for 2007 and each subsequent year, in the case of a home health agency that does not submit data to the Secretary in accordance with sub clause (II) with respect to such a year, the home health market basket percentage increase applicable under such clause for such year shall be reduced by 2 percentage points." This requirement has been codified in regulations at § 484.225(i).

Accordingly, for CY 2011, we propose to continue to use a HHA's submission of OASIS data to meet the requirement that the HHA submit data appropriate for the measurement of health care quality. We are proposing for CY 2011 to consider OASIS assessments submitted by HHAs to CMS in compliance with HHA Conditions of Participation for episodes beginning on or after July 1, 2009 and before July 1, 2010 as fulfilling the quality reporting requirement for CY 2011. This time period would allow 12 full months of

data collection and would provide us the time necessary to analyze and make any necessary payment adjustments to the payment rates in CY 2011. We propose to reconcile the OASIS submissions with claims data in order to verify full compliance with the quality reporting requirements in CY 2011 and each year thereafter on an annual cycle July 1 through June 30 as described above.

As set forth in the CY 2008 final rule, agencies do not need to submit quality data for those patients who are excluded from the OASIS submission requirements under the Home Health Conditions of Participation (CoP) (42 CFR 484.200 through 484.265) as well as those excluded, as described at 70 FR 76202:

- Those patients receiving only non-skilled services,
- Neither Medicare nor Medicaid is paying for home health care (patients receiving care under a Medicare or Medicaid Managed Care Plan are not excluded from the OASIS reporting requirement),
- Those patients receiving pre- or post-partum services, or
- Those patients under the age of 18 years.

As set forth in the CY 2008 final rule at 72 FR 49863, agencies that become Medicare certified on or after May 31 of the preceding year (2009 for payments in 2011) are excluded from any payment penalty for quality reporting purposes for the following CY. Therefore, HHAs that are certified on or after May 1, 2010 are excluded from the quality reporting requirement for CY 2011 payments. These exclusions only affect quality reporting requirements and do not affect the HHA's reporting responsibilities under the CoP. HHAs that meet the quality data reporting requirements would be eligible for the full home health market basket percentage increase. HHAs that do not meet the reporting requirements would be subject to a 2 percent reduction to the home health market basket increase in conjunction with applicable provisions of The Affordable Care Act, as discussed in the section "Proposed CY 2011 Payment Update" of this rule.

Section 1895(b)(3)(B)(v)(III) of the Act further requires that "[t]he Secretary shall establish procedures for making data submitted under sub clause (II) available to the public. Such procedures shall ensure that a home health agency has the opportunity to review the data that is to be made public with respect to the agency prior to such data being made public." We propose to continue to use the subset of OASIS data that is utilized for quality measure development and publicly reported on Home Health Compare as the appropriate measure of home health quality.

To meet the requirement for making such data public, we propose to continue using the *Home Health Compare* Web site, which lists HHAs geographically. Currently, the Home Health Compare Web site lists 12 quality measures from the OASIS data set as described below. The Home Health Compare Web site, which will be redesigned by October 2010, is located at the following address: *http://www.medicare.gov/HHCompare/Home.asp.* Each HHA currently has pre-publication access, through the CMS contractor, to its own quality data that the contractor updates periodically. We propose to continue this process, to enable each agency to view its quality measures before public posting of data on *Home Health Compare.*

The following twelve outcome measures are currently publicly reported:

- Improvement in ambulation/locomotion,
- Improvement in bathing,
- Improvement in transferring,
- Improvement in management of oral medications,
- Improvement in pain interfering with activity,
- Acute care hospitalization,
- Emergent care,
- Discharge to community,
- Improvement in dyspnea,
- Improvement in urinary incontinence,
- Improvement in status of surgical wounds, and
- Emergent care for wound infections, deteriorating wound status.

We propose to continue to use specified measures derived from the OASIS data for purposes of measuring home health care quality. This would also ensure that providers would not have an additional burden of reporting quality of care measures through a separate mechanism, and that the costs associated with the development and testing of a new reporting mechanism would be avoided.

CMS proposes to change the set of OASIS outcome measures that will be publicly reported beginning in July 2011. One new outcome measure will be added:

- Increase in number of pressure ulcers.

This outcome measure is the percentage of patient episodes in which there was an increase in the number of unhealed pressure ulcers. This measure is viewed as important because pressure ulcers are key indicators of the effectiveness of care and are among the most common causes of harm to patients. Though consensus endorsement is not a requirement for public reporting of home health quality measures, this measure is endorsed by the National Quality Forum.

As previously stated, although NQF endorsement is not required for public reporting, CMS proposes to discontinue public reporting of certain outcome measures which were previously reported on Home Health Compare and are no longer endorsed by NQF. Those measures are—

- Discharge to community,
- Improvement in Urinary Incontinence, and
- Emergent Care for Wound Infections, Deteriorating Wound Status.

CMS welcomes comments regarding the public reporting of these measures. Additionally, the change to OASIS–C results in modifications to two of the outcome measures as shown below:

- *Improvement in bed transferring:* This measure replaces the previously reported measure improvement in transferring. It provides a more focused measurement of the ability to turn and position oneself in bed and transfer to and from the bed.
- *Emergency Department Use Without Hospitalization:* This measure replaces the previously reported measure: Emergent care. It excludes emergency department visits that result in a hospital admission because those visits are already captured in the acute care hospitalization measure.

To summarize, we propose that the following outcome measures, which comprise measurement of home health care quality, would be publicly reported beginning in July 2011:

- Improvement in ambulation/locomotion,
- Improvement in bathing,
- Improvement in bed transferring,
- Improvement in management of oral medications,
- Improvement in pain interfering with activity,
- Acute care hospitalization,
- Emergency Department Use without Hospitalization,
- Improvement in dyspnea,
- Improvement in status of surgical wounds,
- Increase in number of pressure ulcers.

We implemented use of the OASIS–C (Form Number CMS–R–245 (OMB# 0938–0760)) on January 1, 2010. This revision to OASIS was tested and has been distributed for public comment and other technical expert recommendations over the past few years. The OASIS–C can be found using

the following link: *http://www.cms.hhs.gov/HomeHealthQualityInits/12_HHQIOASISDataSet.asp#TopOfPage.*

As a result of changes to the OASIS data set, process of care measures will be available as additional measures of home health quality. CMS published information about new process measures in the **Federal Register** as a proposed rule on August 13, 2009 (74 FR 40960) and as a final rule with comment period on November 10, 2009 (74 FR 58096). We proposed and made final the decision to update *Home Health Compare* in October 2010 to reflect the addition of the following 13 new *process* measures:

- Timely initiation of care,
- Influenza immunization received for current flu season,
- Pneumococcal polysaccharide vaccine ever received,
- Heart failure symptoms addressed during short-term episodes,
- Diabetic foot care and patient education implemented during short-term episodes of care,
- Pain assessment conducted,
- Pain interventions implemented during short-term episodes,
- Depression assessment conducted,
- Drug education on all medications provided to patient/caregiver during short-term episodes.
- Falls risk assessment for patients 65 and older,
- Pressure ulcer prevention plans implemented,
- Pressure ulcer risk assessment conducted, and
- Pressure ulcer prevention included in the plan of care.

The implementation of OASIS–C impacts the schedule of quality measure reporting for CY 2010 and CY 2011. While sufficient OASIS–C data are collected and risk models are developed, the outcome reports (found on Home Health Compare and the contractor outcome reports used for HHA's performance improvement activities) will remain static with OASIS–B1 data. The last available OASIS B–1 reports will remain in the system and on the HHC site until they are replaced with OASIS–C reports. Sufficient numbers of patient episodes are needed in order to report measures based on new OASIS–C data. This is important because measures based on patient sample sizes taken over short periods of time can be inaccurate and misleading due to issues like seasonal variation and under-representation of long-stay home health patients. Once sufficient OASIS–C data have been collected and submitted to the national repository, CMS will begin producing new reports based on OASIS–C.

December 2009 was the last month for which OBQI/M data was calculated for OASIS B1 data and OASIS B1 OBQI/M reports will continue to be available after March 2010. OASIS–C process measures will be available to preview in September 2010 and will be publicly reported in October 2010. OASIS–C outcome measures will be available to preview in May 2011 and will be publicly reported in July 2011.

b. Home Health Care CAHPS Survey (HHCAHPS)

In the Home Health Prospective Payment System (HH PPS) Rate Update for Calendar Year 2010 Final Rule, published on November 10, 2009, we expanded the home health quality measures reporting requirements for Medicare-certified agencies to include the CAHPS® Home Health Care (HHCAHPS) Survey for the CY 2012 annual payment update. CMS is maintaining its existing policy as promulgated in the HH PPS Rate Update for Calendar Year 2010, and is moving forward with its plans for HHCAHPS linkage to the pay-for-reporting requirement affecting the HH PPS rate update for CY 2012.

As part of the U.S. Department of Health and Human Services' (DHHS) Transparency Initiative, CMS has implemented a process to measure and publicly report patient experiences with home health care using a survey developed by the Agency for Healthcare Research and Quality's (AHRQ's) Consumer Assessment of Healthcare Providers and Systems (CAHPS®) program. The HHCAHPS survey is part of a family of CAHPS® surveys that asks patients to report on and rate their experiences with health care. The HHCAHPS survey presents home health patients with a set of standardized questions about their home health care providers and about the quality of their home health care. Prior to this survey, there was no national standard for collecting information about patient experiences that would enable valid comparisons across all home health agencies (HHAs).

Background and Description of the HHCAHPS

AHRQ, in collaboration with its CAHPS grantees, developed the CAHPS® Home Health Care Survey with the assistance of many entities (for example, government agencies, professional stakeholders, consumer groups and other key individuals and organizations involved in home health care). The HHCAHPS survey was designed to measure and assess the experiences of those persons receiving home health care with the following three goals in mind:

- To produce comparable data on patients' perspectives of care that allow objective and meaningful comparisons between HHAs on domains that are important to consumers;
- To create incentives for agencies to improve their quality of care through public reporting of survey results; and
- To hold health care providers accountable by informing the public about the providers' quality of care.

The development process for the survey began in 2006 and included a public call for measures, review of the existing literature, consumer input, stakeholder input, public response to **Federal Register** notices, and a field test conducted by AHRQ. AHRQ conducted this field test to validate the length and content of the CAHPS® Home Health Care Survey. We submitted the survey to the National Quality Forum (NQF) for consideration and endorsement via their consensus process. NQF endorsement represents the consensus opinion of many healthcare providers, consumer groups, professional organizations, health care purchasers, Federal agencies and research and quality organizations. The survey received NQF endorsement on March 31, 2009. The HHCAHPS survey received clearance from OMB on July 18, 2009, and the OMB number is 0938–1066.

The HHCAHPS survey includes 34 questions covering topics such as specific types of care provided by home health providers, communication with providers, interactions with the HHA, and global ratings of the agency. For public reporting purposes, we will utilize composite measures and global ratings of care. Each composite measure consists of four or more questions regarding one of the following related topics:

1. Patient care;
2. Communications between providers and patients;
3. Specific care issues (medications, home safety and pain).

There are also two global ratings; the first rating asks the patient to assess the care given by the HHA's care providers; and the second asks the patient about his/her willingness to recommend the HHA to family and friends.

The survey is currently available in five languages. At the time of the Final Rule for CY 2010, we only provided HHCAHPS in English and Spanish translations. In the proposed rule for CY 2010, we proposed that CMS will provide additional translations of the

survey over time in response to suggestions for any additional language translations. We now offer HHCAHPS in English, Spanish, Chinese, Russian and Vietnamese languages. We will continue to consider additional translations of the HHCAHPS in response to the needs of the home health patient population.

The following types of home health care patients are eligible to participate in the HHCAHPS survey:

- Current or discharged Medicare and/or Medicaid patients who had at least one skilled home health visit at any time during the sample month;
- Patients who were at least 18 years of age at any time during the sample period, and are believed to be alive;
- Patients who received at least two skilled care visits from HHA personnel during a 2 month look-back period. (Note that the 2 month look-back period is defined as the 2 month period prior to and including the last day in the sample month);
- Patients who have not been selected for the monthly sample during any month in the current quarter or during the 5 months immediately prior to the sample month;
- Patients who are not currently receiving hospice care;
- Patients who do not have "maternity" as the primary reason for receiving home health care; and
- Patients who have not requested "no publicity status."

We are maintaining for the CY 2012 annual payment update the existing requirements for Medicare-certified agencies to contract with an approved HHCAHPS survey vendor. Beginning in summer 2009, interested vendors applied to become approved HHCAHPS vendors. The application process is delineated online at *https://www.homehealthcahps.org*. Vendors are required to attend introductory and all update trainings conducted by CMS and the HHCAHPS Survey Coordination Team, as well as to pass a post-training certification test. We now have 42 approved HHCAHPS survey vendors. In this proposed rule, we propose to codify the requirements for HHCAHPS survey vendors for the CY 2013 annual payment update.

HHAs started to participate in HHCAHPS on a voluntary basis beginning in October 2009. CMS defines "voluntary participation" as meaning that HHCAHPS participation is not attached to the quality reporting requirement for the annual payment update. These agencies selected a vendor from the list of HHCAHPS approved survey vendors. This listing is on the Web site *https://www.homehealthcahps.org*.

Public Display of the Home Health Care CAHPS Survey Data

The Home Health Care CAHPS data will be incorporated into the Home Health Compare Web site to complement the clinical measures. The HHCAHPS data displays will be very similar to those of the Hospital CAHPS (HCAHPS) data displays and presentations on Hospital Compare, where the patients' perspectives of care data from HCAHPS are displayed along with the hospital clinical measures of quality. CMS believes that the HHCAHPS will enhance the information included in Home Health Compare by providing Medicare beneficiaries a greater ability to compare the quality of home health agencies. CMS anticipates that HHCAHPS data will first be reported sometime in spring/summer 2011. The first reporting of HHCAHPS data will include data that were collected in the voluntary period of HHCAHPS data collection and reporting, prior to the period when the HHCAHPS data count toward the 2012 APU.

Participation Requirements for CY 2012: The Consumer Assessment of Healthcare Providers and Systems (CAHPS®) Home Health Care Survey

In the HH PPS Final Rule for CY 2010, we stated that HHCAHPS would not be required for the annual payment update for CY 2011. However, we stated that data collection should take place beginning in CY 2010 in order to meet the HHCAHPS reporting requirement for the CY 2012 annual payment update as stated in the HH PPS Final Rule for CY 2010 (58078, 58099, 58100, 58103, and 58104). Medicare-certified agencies were asked to participate in a dry run for at least one month in third quarter of 2010, and begin continuous monthly data collection in October 2010 in accordance with the Protocols and Guidelines Manual located on the HHCAHPS Web site *https://www.homehealthcahps.org*.

The dry run data should be submitted to the Home Health CAHPS® Data Center by 11:59 p.m. EST on January 21, 2011. The dry run data will not be publicly reported on the CMS Home Health Compare Web site. The purpose of the dry run is to provide an opportunity for vendors and HHAs to acquire first-hand experience with data collection, including sampling and data submission to the Home Health CAHPS® Data Center. We previously stated that all Medicare-certified HHAs should continuously collect HHCAHPS survey data for every month in every quarter beginning with the fourth quarter (October, November, and December) of 2010, and submit these data for the fourth quarter of 2010 to the Home Health CAHPS® Data Center by 11:59 p.m. EST on April 21, 2011. These data submission deadlines are firm (that is, no late submissions will be accepted).

The period of data collection for the CY 2012 annual payment update includes the dry run data in the third quarter 2010, the fourth quarter 2010 (October, November and December 2010), and the first quarter 2011 (January, February and March 2011). The data from the three months of the first quarter 2011 should be submitted to the Home Health CAHPS® Data Center by 11:59 p.m. EST on July 21, 2011. These periods (a dry run in third quarter 2010, and six months of data from October 2010 through March 2011) have been deliberately chosen to comprise the HHCAHPS reporting requirements for the CY 2012 APU because they coincide with the OASIS–C reporting requirements that are due by June 30, 2011 for the CY 2012 APU. In the previous rule, we stated that the HHCAHPS survey data would be submitted and analyzed quarterly, and that the sample selection and data collection would occur on a monthly basis. HHAs would target 300 HHCAHPS survey completes annually. Smaller agencies that are unable to reach 300 survey completes by sampling would survey all HHCAHPS eligible patients.

We stated that survey vendors initiate the survey for each monthly sample within 3 weeks after the end of the sample month. We wrote that all data collection for each monthly sample would have to be completed within 6 weeks (42 calendar days) after data collection began. Three survey administration modes could be used: Mail only, telephone only, and mail with telephone follow-up (the "mixed mode"). We also conveyed that for mail-only and mixed-mode surveys, data collection for a monthly sample would have to end 6 weeks after the first questionnaire was mailed. We stated that for telephone-only surveys, data collection would have to end 6 weeks following the first telephone attempt. These criteria would remain the same for HHCAHPS to meet the CY 2012 annual payment update requirements.

As stated in the Home Health Prospective Payment System Rate Update for Calendar Year 2010; final rule (74 FR 58078), we would exempt Medicare-certified HHAs certified on or after April 1, 2011 from the HHCAHPS reporting requirement for CY 2012 as data submission and analysis will not be

possible for an agency this late in the CY 2012 reporting period.

We would also exempt Medicare-certified agencies from the HHCAHPS reporting requirements if they have fewer than 60 HHCAHPS eligible unique patients from April 1, 2009 through March 31, 2010. In the CY 2010 Final Rule, we stated that by June 16, 2010, HHAs would need to provide CMS with patient counts for the period of April 1, 2009 through March 31, 2010. We have posted a form that the HHAs need to use to submit their patient counts via the Web site *https://www.homehealthcahps.org.* This proposed requirement pertains only to Medicare-certified HHAs with fewer than 60 HHCAHPS eligible, unduplicated or unique patients for that time period. The aforementioned agencies would be exempt from conducting the HHCAHPS survey for the annual payment update in CY 2012. We propose to codify that if an HHA has less than 60 eligible unique HHCAHPS patients annually, then they must submit to CMS their total patient count in order to be exempt from the HHCAHPS reporting requirement.

For CY 2012, we maintain our policy that all HHAs, unless covered by specific exclusions, meet the quality reporting requirements or be subject to a 2 percentage point reduction in the home health market basket percentage increase in accordance with section 1895(b)(3)(B)(v)(I) of the Act.

A reconsiderations and appeals process is being developed for HHAs that fail to meet the HHCAHPS reporting requirements. We proposed that these procedures will be detailed in the CY 2012 home health payment rule, the period for which HHCAHPS would be linked to the home health market basket percentage increase. We propose that in September through October 2011, we would compile a list of HHAs that were not compliant with OASIS–C and/or HHCAHPS for the 2012 APU reporting requirements. These HHAs would receive explicit instructions about how to prepare a request for reconsideration of the CMS decision, and these HHAs would have 30 days to file their requests for reconsiderations to CMS. By December 31, 2011, we would provide our final determination for the quality reporting requirements for calendar year 2012 payment. HHAs have a right to appeal to the Prospective Reimbursement Review Board (PRRB) if they are not satisfied with the CMS determination.

Oversight Activities for the Consumer Assessment of Healthcare Providers and Systems (CAHPS®) Home Health Care Survey

We stated that vendors and HHAs would be required to participate in HHCAHPS oversight activities to ensure compliance with HHCAHPS protocols, guidelines and survey requirements. The purpose of the oversight activities is to ensure that HHAs and approved survey vendors follow the Protocols and Guidelines Manual. It was stated that all approved survey vendors develop a Quality Assurance Plan (QAP) for survey administration in accordance with the Protocols and Guidelines Manual. The QAP should include the following:

- An organizational chart;
- A work plan for survey implementation;
- A description of survey procedures and quality controls;
- Quality assurance oversight of on-site work and of all subcontractors' work; and
- Confidentiality/Privacy and Security procedures in accordance with the Health Insurance Portability and Accountability Act (HIPAA).

As part of the oversight activities the HHCAHPS Survey Coordination Team would conduct on-site visits and/or conference calls. The HHCAHPS Survey Coordination Team would review the survey vendor's survey systems, and would assess administration protocols based on the Protocols and Guidelines Manual posted on *https://www.homehealthcahps.org*. We stated that all materials relevant to survey administration would be subject to review. The systems and program review would include, but not be limited to: (a) Survey management and data systems; (b) printing and mailing materials and facilities; (c) data receipt, entry and storage facilities; and (d) written documentation of survey processes. Organizations would be given a defined time period in which to correct any problems and provide follow-up documentation of corrections for review. Survey vendors would be subject to follow-up site visits as needed.

HHCAHPS Requirements for CY 2013

For the CY 2013 annual payment update, we propose to begin to require that four quarters of data be submitted for HHCAHPS. This would include second quarter 2011 through first quarter 2012. We propose that HHAs be required to submit data for the second quarter 2011 by 11:59 p.m. on October 21, 2011 to the Home Health CAHPS Data Center. We also propose that HHAs submit data for the third quarter 2011 by 11:59 p.m. EST January 21, 2012 to the Home Health CAHPS Data Center. We additionally propose that HHAs be required to submit data for the fourth quarter 2011 by 11:59 p.m. EST April 21, 2012 to the Home Health CAHPS Data Center. Finally, we propose that HHAs be required to submit data for the first quarter 2012 by 11:59 p.m. EST July 21, 2012 to the Home Health CAHPS Data Center.

We propose to exempt Medicare-certified HHAs certified on or after April 1, 2012 from the HHCAHPS reporting requirement for CY 2013, as data submission and analysis would not be possible for an agency this late in the CY 2013 reporting period. For the CY 2013 annual payment update, we propose that new Medicare-certified HHAs that open during the year begin HHCAHPS data collection the quarter following receipt of the CMS Certification Number (CCN).

We propose that all HHAs that have fewer than 60 HHCAHPS-eligible unduplicated or unique patients in the period of April 1, 2010 through March 31, 2011 be exempt from the HHCAHPS data collection requirements for the CY 2013 annual payment update. Agencies with fewer than 60 HHCAHPS-eligible, unduplicated or unique patients would be required to submit their counts on the form posted on *https://www.homehealthcahps.org,* the Web site of Home Health Care CAHPS by June 16, 2011. This would be a firm deadline as are all of the quarterly data submission deadlines.

We are proposing to codify the HHCAHPS survey vendor requirements in the CY 2013 rule. In our regulation, we would revise § 484.250(c)(2) to codify that all applying survey vendors would have to have been in business for a minimum of three years and have conducted surveys of individuals for at least two years immediately preceding the application to CMS to become a survey vendor for HHCAHPS. For purposes of the HHCAHPS, a "survey of individuals" would be defined as the collection of data from individuals selected by statistical sampling methods and the data collected are used for statistical purposes. An applicant organization must:

- Have conducted surveys of individuals responding about their own experiences, not of individuals responding on behalf of a business or organizations (establishment or institution surveys);
- Be able to demonstrate that a statistical sampling process (that is, simple random sampling [SRS],

proportionate stratified random sampling [PSRS], or disproportionate stratified random sampling [DSRS]) was used in the conduct of previously or currently conducted survey(s);

• Be able to demonstrate that it, as an organization, has conducted surveys where a sample of individuals was selected for at least two years. If staff within the applicant organization has relevant experience obtained while in the employment of a different organization, that experience may not be counted toward the 2 year minimum of survey experience; and

• Currently possess all required facilities and systems to implement the HHCAHPS Survey.

We are also proposing that the following examples of data collection activities would not satisfy the requirement of valid survey experience for vendors as defined for the HHCAHPS Survey, and these would not be considered as part of the experience that HHCAHPS will require:

• Polling questions administered to trainees or participants of training sessions or educational courses, seminars, or workshops;

• Focus groups, cognitive interviews, or any other qualitative data collection activities;

• Surveys of fewer than 600 individuals;

• Surveys conducted that did not involve using statistical sampling methods;

• Internet or Web-based surveys; and

• Interactive Voice Recognition Surveys.

We are proposing to codify the criteria about which organizations are ineligible to become HHCAHPS approved survey vendors. CMS is proposing that any organization that owns, operates, or provides staffing for a HHA not be permitted to administer its own Home Health Care CAHPS (HHCAHPS) Survey or administer the survey on behalf of any other HHA. CMS began the HHCAHPS with the belief, based on input from many stakeholders and the public, that an independent third party (such as a survey vendor) will be best able to solicit unbiased responses to the HHCAHPS Survey. Since home health patients receive care in their homes, this survey population is particularly vulnerable and dependent upon their HHA caregivers. Therefore, in § 484.250(c)(2) we are proposing that HHAs be required to contract only with an independent, approved HHCAHPS vendor to administer the HHCAHPS survey on their behalf.

Specifically, we are proposing that the following types of organizations would not be eligible to administer the HHCAHPS Survey as an approved HHCAHPS vendor:

• Organizations or divisions within organizations that own or operate a HHA or provide home health services, even if the division is run as a separate entity to the HHA;

• Organizations that provide telehealth, monitoring of home health patients, or teleprompting services for HHAs; and

• Organizations that provide staffing to HHAs for providing care to home health patients, whether personal care aides or skilled services staff.

For Further Information on the HHCAHPS Survey

We encourage HHAs interested in learning about the survey to view the HHCAHPS survey web site, at *https://www.homehealthcahps.org*. Agencies can also call toll-free (1–866–354–0985), or send an e-mail to the HHCAHPS Survey Coordination Team at *HHCAHPS@rti.org* for more information.

3. Home Health Wage Index

Sections 1895(b)(4)(A)(ii) and (b)(4)(C) of the Act require the Secretary to establish area wage adjustment factors that reflect the relative level of wages and wage-related costs applicable to the furnishing of home health services and to provide appropriate adjustments to the episode payment amounts under the HH PPS to account for area wage differences. We apply the appropriate wage index value to the labor portion of the HH PPS rates based on the site of service for the beneficiary (defined by section 1861(m) of the Act as the beneficiary's place of residence). Generally, we determine each HHA's labor market area based on definitions of Metropolitan Statistical Areas (MSAs) issued by the Office of Management and Budget (OMB). We have consistently used the pre-floor, pre-reclassified hospital wage index data to adjust the labor portion of the HH PPS rates. We believe the use of the pre-floor, pre-reclassified hospital wage index data results in the appropriate adjustment to the labor portion of the costs as required by statute.

In the November 9, 2005 final rule for CY 2006 (70 FR 68132), we adopted revised labor market area definitions based on Core-Based Statistical Areas (CBSAs). At the time, we noted that these were the same labor market area definitions (based on OMB's new CBSA designations) implemented under the Hospital Inpatient Prospective Payment System (IPPS). In adopting the CBSA designations, we identified some geographic areas where there are no hospitals and, thus, no hospital wage data on which to base the calculation of the home health wage index. We continue to use the methodology discussed in the November 9, 2006 final rule for CY 2007 (71 FR 65884) to address the geographic areas that lack hospital wage data on which to base the calculation of their home health wage index. For rural areas that do not have IPPS hospitals, we use the average wage index from all contiguous CBSAs as a reasonable proxy. This methodology is used to calculate the wage index for rural Massachusetts. However, we could not apply this methodology to rural Puerto Rico due to the distinct economic circumstances that exist there, but instead continue using the most recent wage index previously available for that area (from CY 2005). For urban areas without IPPS hospitals, we use the average wage index of all urban areas within the State as a reasonable proxy for the wage index for that CBSA. The only urban areas without IPPS hospital wage data are Anderson, South Carolina (CBSA 11340) and Hinesville-Fort Stewart, Georgia (CBSA 25980).

On December 1, 2009, OMB issued Bulletin No. 10–02 located at Web address *http://www.whitehouse.gov/omb/assets/bulletins/b10-02.pdf*. This bulletin highlights three geographic areas whose principal city has changed therefore causing the CBSA names to change and requiring new CBSA numbers. Bradenton-Sarasota-Venice, FL (CBSA 14600) is replaced by North Port-Bradenton-Sarasota, FL (CBSA 35840). Fort Walton Beach-Crestview-Destin, FL (CBSA 23020) is replaced by Crestview-Fort Walton Beach-Destin, FL (CBSA 18880). Weirton-Steubenville, WV-OH Metropolitan Statistical Area (CBSA 48260) is replaced by Steubenville-Weirton, OH-WV (CBSA 44600). The CBSAs and their associated wage index values are shown in Addendum B. The wage index values for rural areas are shown in Addendum A.

4. Proposed CY 2011 Payment Update

a. National Standardized 60-Day Episode Rate

The Medicare HH PPS has been in effect since October 1, 2000. As set forth in the final rule published July 3, 2000 in the **Federal Register** (65 FR 41128), the unit of payment under the Medicare HH PPS is a national standardized 60-day episode rate. As set forth in § 484.220, we adjust the national standardized 60-day episode rate by a case-mix relative weight and a wage index value based on the site of service for the beneficiary.

In the CY 2008 HH PPS final rule with comment period, we refined the case-mix methodology and also rebased and revised the home health market basket. The labor-related share of the case-mix adjusted 60-day episode rate is 77.082 percent and the non-labor-related share is 22.918 percent. The proposed CY 2011 HH PPS rates use the same case-mix methodology and application of the wage index adjustment to the labor portion of the HH PPS rates as set forth in the CY 2008 HH PPS final rule with comment period. We multiply the national 60-day episode rate by the patient's applicable case-mix weight. We divide the case-mix adjusted amount into a labor and non-labor portion. We multiply the labor portion by the applicable wage index based on the site of service of the beneficiary. We add the wage-adjusted portion to the non-labor portion, yielding the case-mix and wage adjusted 60-day episode rate, subject to any additional applicable adjustments.

In accordance with section 1895(b)(3)(B) of the Act, we update the HH PPS rates annually in a separate **Federal Register** document. The HH PPS regulations at 42 CFR 484.225 set forth the specific annual percentage update methodology. In accordance with § 484.225(i), in the case of a HHA that does not submit home health quality data, as specified by the Secretary, the unadjusted national prospective 60-day episode rate is equal to the rate for the previous calendar year increased by the applicable home health market basket index amount minus two percentage points. Any reduction of the percentage change will apply only to the calendar year involved and will not be taken into account in computing the prospective payment amount for a subsequent calendar year.

For CY 2011, we are proposing to base the wage index adjustment to the labor portion of the HH PPS rates on the most recent pre-floor and pre-reclassified hospital wage index. As discussed in the July 3, 2000 HH PPS final rule, for episodes with four or fewer visits, Medicare pays the national per-visit amount by discipline, referred to as a LUPA. We propose to update the national per-visit rates by discipline annually by the applicable home health market basket percentage. We propose to adjust the national per-visit rate by the appropriate wage index based on the site of service for the beneficiary, as set forth in § 484.230. We propose to adjust the labor portion of the updated national per-visit rates used to calculate LUPAs by the most recent pre-floor and pre-reclassified hospital wage index. We are also proposing to update the LUPA add-on payment amount and the NRS conversion factor by the proposed applicable home health market basket update of 1.4 percent for CY 2011.

Medicare pays the 60-day case-mix and wage-adjusted episode payment on a split percentage payment approach. The split percentage payment approach includes an initial percentage payment and a final percentage payment as set forth in § 484.205(b)(1) and § 484.205(b)(2). We may base the initial percentage payment on the submission of a request for anticipated payment (RAP) and the final percentage payment on the submission of the claim for the episode, as discussed in § 409.43. The claim for the episode that the HHA submits for the final percentage payment determines the total payment amount for the episode and whether we make an applicable adjustment to the 60-day case-mix and wage-adjusted episode payment. The end date of the 60-day episode as reported on the claim determines which calendar year rates Medicare would use to pay the claim.

We may also adjust the 60-day case-mix and wage-adjusted episode payment based on the information submitted on the claim to reflect the following:

- A low utilization payment provided on a per-visit basis as set forth in § 484.205(c) and § 484.230.
- A partial episode payment adjustment as set forth in § 484.205(d) and § 484.235.
- An outlier payment as set forth in § 484.205(e) and § 484.240.

b. Proposed Updated CY 2011 National Standardized 60-Day Episode Payment Rate

In calculating the annual update for the CY 2011 national standardized 60-day episode payment rates, we first look at the CY 2010 rates as a starting point. The CY 2010 national standardized 60-day episode payment rate is $2,312.94.

As previously discussed in section II.D. ("Outlier Policy") of this proposed rule, in our proposed policy of targeting outlier payments to be approximately 2.5 percent of total HH PPS payments in CY 2011, we are proposing to return 2.5 percent back into the HH PPS rates, to include the national standardized 60-day episode payment rate. Therefore, to calculate the proposed CY 2011 national standardized 60-day episode payment rate, we first increase the CY 2010 national standardized 60-day episode payment rate ($2,312.94) to adjust for the 2.5 percent set aside in CY 2010 for outlier payments. We then reduce that adjusted payment amount by 5 percent, for outlier payments as a percentage of total HH PPS payment as mandated by Section 3131 of The Affordable Care Act. Next, we update the payment amount by the current proposed CY 2011 home health market basket update of 1.4 percent.

As previously discussed in Section II.A. ("Case-Mix Measurement Analysis") of this proposed rule, our updated analysis of the change in case-mix that is not due to an underlying change in patient health status reveals additional increase in nominal change in case-mix. Therefore, we propose to reduce rates by 3.79 percent in CY 2011, resulting in a proposed updated CY 2011 national standardized 60-day episode payment rate of $2,198.58. The proposed updated CY 2011 national standardized 60-day episode payment rate for an HHA that submits the required quality data is shown in Table 4. The proposed updated CY 2011 national standardized 60-day episode payment rate for an HHA that does not submit the required quality data (home health market basket update of 1.4 percent is reduced by 2 percentage points) is shown in Table 5.

BILLING CODE 4120–01–P

Table 4					
Proposed National 60-Day Episode Payment Amount Updated by the Proposed Home Health Market Basket Update for CY 2011, Before Case-Mix Adjustment and Wage Adjustment Based on the Site of Service for the Beneficiary					
CY 2010 National Standardized 60-Day Episode Payment Rate	Adjusted to return the outlier funds that paid for the 2.5 % target for outlier payments in CY 2010	Reduced by 5% due to the outlier adjustment mandated by The Affordable Care Act	Multiply by the proposed home health market basket update of 1.4%	Reduce by 3.79% for nominal change in case-mix	Proposed CY 2011 National Standardized 60-Day Episode Payment Rate.
$2,312.94	÷ 0.975	X 0.95	X 1.014	X 0.9621	$2,198.58

Table 5					
For HHAs that Do Not Submit the Quality Data -- Proposed National 60-Day Episode Payment Amount Updated by the Proposed Home Health Market Basket Update for CY 2011, Before Case-Mix Adjustment and Wage Adjustment Based on the Site of Service for the Beneficiary					
CY 2010 National Standardized 60-Day Episode Payment Rate	Adjusted to return the outlier funds that paid for the 2.5 % target for outlier payments in CY 2010	Reduced by 5% due to the outlier adjustment mandated by the The Affordable Care Act	Multiply by the proposed home health market basket update of 1.4% minus 2% (-0.6%)	Reduce by 3.79% for nominal change in case-mix	Proposed CY 2011 National Standardized 60-Day Episode Payment Rate.
$2,312.94	÷ 0.975	X 0.95	X 0.994	X 0.9621	$2,155.21

BILLING CODE 4120–01–C

c. Proposed National Per-Visit Rates Used To Pay LUPAs and Compute Imputed Costs Used in Outlier Calculations

In calculating the proposed CY 2011 national per-visit rates used to calculate payments for LUPA episodes and to compute the imputed costs in outlier calculations, we start with the CY 2010 national per-visit rates. We first adjust the CY 2010 national per-visit rates to adjust for the 2.5 percent set aside during CY 2011 for outlier payments. We then reduce those national per-visit rates by 5 percent as mandated by section 1895(b)(3)(C) of the Act, as amended by Section 3131 of The Affordable Care Act. Next we update the national per-visit rates by the current proposed CY 2011 home health market basket update of 1.4 percent. National per-visit rates are not subject to the 3.79 percent reduction related to the nominal increase in case-mix. The proposed CY 2011 national per-visit rates per discipline are shown in Table 6. The six home health disciplines are Home Health Aide (HH aide), Medical Social Services (MSS), Occupational Therapy (OT), Physical Therapy (PT), Skilled Nursing (SN), and Speech Language Pathology Therapy (SLP).

BILLING CODE 4120–01–P

Table 6

Proposed National Per-Visit Amounts for LUPAs (Not including the LUPA Add-On Amount for a Beneficiary's Only Episode or the Initial Episode in a Sequence of Adjacent Episodes) and Outlier Calculations Updated by the Proposed CY 2011 Home Health Market Basket Update, Before Wage Index Adjustment

				For HHAs that DO submit the required quality data		For HHAs that DO NOT submit the required quality data	
Home Health Discipline Type	**CY 2010 Per-Visit Amounts Per 60-Day Episode**	**Adjusted to return the outlier funds that paid for the 2.5% target for outlier payments in CY 2010**	**Reduced by 5% due to the outlier adjustment mandated by The Affordable Care Act**	**Multiply by the proposed home health market basket update of 1.4%**	**CY 2011 per-visit payment amount f For HHAs that DO submit the required quality data**	**Multiply by the proposed home health market basket update of 1.4% minus 2 percent (-0.6%)**	**CY 2011 per-visit payment amount for HHAs that DO NOT submit the required quality data**
Home Health Aide	$51.18	÷ 0.975	X 0.95	X 1.014	$50.57	X 0.994	$49.57
Medical Social Services	$181.16	÷ 0.975	X 0.95	X 1.014	$178.99	X 0.994	$175.46
Occupational Therapy	$124.40	÷ 0.975	X 0.95	X 1.014	$122.91	X 0.994	$120.48
Physical Therapy	$123.57	÷ 0.975	X 0.95	X 1.014	$122.09	X 0.994	$119.68
Skilled Nursing	$113.01	÷ 0.975	X 0.95	X 1.014	$111.65	X 0.994	$109.45
Speech-Language Pathology	$134.27	÷ 0.975	X 0.95	X 1.014	$132.66	X 0.994	$130.04

BILLING CODE 4120–01–C

d. Proposed LUPA Add-On Payment Amount Update

Beginning in CY 2008, LUPA episodes that occur as the only episode or initial episode in a sequence of adjacent episodes are adjusted by adding an additional amount to the LUPA payment before adjusting for area wage differences. As previously discussed, we are returning 2.5 percent back into the LUPA add-on payment. We then reduce the LUPA add-on payment by 5 percent outlier adjustment as mandated by Section 1895(b)(3)(C) of the Act as amended by Section 3131 of The Affordable Care Act. Next we update the LUPA payment amount by the current proposed CY 2011 home health market basket update percentage of 1.4 percent. The LUPA add-on payment amount is not subject to the 3.79 percent reduction related to the nominal increase in case-mix. For CY 2011, we propose that the add-on to the LUPA payment to HHAs that submit the required quality data would be updated by the proposed home health market basket update of 1.4 percent. The proposed CY 2011 LUPA add-on payment amount is shown in Table 7 below. We propose that the add-on to the LUPA payment to HHAs that do not submit the required quality data would be updated by the home health market basket update (1.4 percent) minus two percentage points.

Table 7

Proposed CY 2011 LUPA Add-On Amounts

			For HHAs that DO submit the required quality data		**For HHAs that DO NOT submit the required quality data**	
CY 2010 LUPA Add-On Amount Adjusted to return the outlier funds, that paid for the original 5 % target for outliers	Adjusted to return the outlier funds that paid for the 2.5% target for outlier payments in CY 2010	Reduced by 5% due to the outlier adjustment mandated by the The Affordable Care Act	Multiply by the proposed home health market basket update of 1.4%	Proposed CY 2011 LUPA Add-On Amount for HHAs that DO submit required quality data	Multiply by the proposed home health market basket update of 1.4% minus 2 percent (-0.6%)	Proposed CY 2011 LUPA Add-On Amount for HHAs that DO NOT submit required quality data
$94.72	÷ 0.975	X 0.95	X 1.014	$93.58	X 0.994	$91.74

e. Non-Routine Medical Supply Conversion Factor Update

Payments for non-routine medical supplies (NRS) are computed by multiplying the relative weight for a particular severity level by the NRS conversion factor. We first adjust the CY 2010 NRS conversion factor ($53.34) for the 2.5 percent set aside for outlier payments in CY 2010. We then reduce that amount by the 5 percent outlier adjustment as mandated by Section 1895(b)(3)(C), as amended by Section 3131 of The Affordable Care Act. Next we update by the proposed market basket update of 1.4 percent. Finally, we then reduce that adjusted payment amount by 3.79 percent to account for the increase in nominal case-mix. The final updated CY 2011 NRS conversion factor for CY 2011 in Table 8a below. For CY 2011, the proposed NRS conversion factor is $50.70.

Table 8a -- Proposed CY 2011 NRS Conversion Factor for HHAs that DO Submit the Required Quality Data

CY 2010 NRS Conversion Factor	Adjusted to return the outlier funds that paid for the 2.5% target for outlier payments in CY 2010	Reduced by 5% due to the outlier adjustment mandated by The Affordable Care Act	Multiply by the proposed home health market basket update of 1.4%	Reduce by 3.79% for nominal change in case-mix	Proposed CY 2011 NRS Conversion Factor for HHAs that Do submit the Required Quality Data
$53.34	÷ 0.975	X 0.95	X 1.014	X 0.9621	$50.70

Using the proposed NRS conversion factor ($50.70) for CY 2011, the payment amounts for the various severity levels are shown in Table 8b.

Table 8b			
Relative Weights for the 6-Severity NRS System			
Severity Level	Points (Scoring)	Relative Weight	Proposed NRS Payment Amount
1	0	0.2698	$13.68
2	1 to 14	0.9742	$49.39
3	15 to 27	2.6712	$135.43
4	28 to 48	3.9686	$201.21
5	49 to 98	6.1198	$310.27
6	99+	10.5254	$533.64

For HHAs that do not submit the required quality data, we again begin with the CY 2010 NRS conversion factor. We first adjust the CY 2010 NRS conversion factor ($53.34) for the 2.5 percent set aside for outlier payments in CY 2010. We then reduce that amount by the 5 percent outlier adjustment as mandated by Section 1895(b)(3)(C) of the Act, as amended by Section 3131 of The Affordable Care Act. Next we update the conversion factor by the proposed CY 2011 home health market basket update percentage of 1.4 percent minus 2 percentage points. Finally, we reduce that adjusted payment amount by 3.79 percent to account for the increase in nominal case-mix. The proposed CY 2011 NRS conversion factor for HHAs that do not submit quality data is shown in Table 9a below.

Table 9a -- Proposed CY 2011 NRS Conversion Factor for HHAs that DO NOT Submit the Required Quality Data					
CY2010 NRS Conversion Factor	Adjusted to return the outlier funds that paid for the 2.5% target for outlier payments in CY 2010	Reduced by 5% due to the outlier adjustment mandated by The Affordable Care Act	Multiply by the proposed home health market basket update of 1.4% minus 2% (-0.6%)	Reduce by 3.79% for nominal change in case-mix	Proposed CY 2011 NRS Conversion Factor for HHAs that Do Not submit the Required Quality Data
$53.34	÷ 0.975	X 0.95	X 0.994	X 0.9621	$49.70

The payment amounts for the various severity levels based on the updated conversion factor for HHAs that do not submit quality data are calculated in Table 9b below.

Table 9b-- Relative Weights for the 6-Severity NRS System for HHAs that DO NOT Submit Quality Data			
Severity Level	Points (Scoring)	Relative Weight	Proposed NRS Payment Amount
1	0	0.2698	$13.41
2	1 to 14	0.9742	$48.42
3	15 to 27	2.6712	$132.76
4	28 to 48	3.9686	$197.24
5	49 to 98	6.1198	$304.15
6	99+	10.5254	$523.11

5. Rural Add-On

Section 3131(c) of The Affordable Care Act amended section 421(a) of the Medicare Prescription Drug, Improvement, and Modernization Act (MMA) of 2003 (Pub. L. 108–173) as amended by section 5201(b) of the Deficit Reduction Act of 2005 (Pub. L. 109–171). The amended section 421(a) of the MMA provides an increase of 3 percent of the payment amount otherwise made under section 1895 of the Act for home health services furnished in a rural area (as defined in section 1886(d)(2)(D) of the Act), with respect to episodes and visits ending on or after April 1, 2010 and before January 1, 2016. The statute waives budget neutrality related to this provision as it specifically states that the Secretary shall not reduce the standard prospective payment amount (or amounts) under section 1895 of the Act applicable to home health services furnished during a period to offset the increase in payments resulting in the application of this section of the statute. The 3 percent rural add-on is applied to the national standardized 60-day episode rate, national per-visit rates, LUPA add-on payment, and NRS conversion factor when home health services are provided in rural (non-CBSA) areas. We implemented this provision for CY 2010, for episodes and visits ending on or after April 1, 2010 and ending before January 1, 2011 through Program Memorandum "Temporary 3 Percent Rural Add-On for the Home Health Prospective payment System (HH PPS)" (Transmittal #674/ Change Request #6955, issued April 23, 2010). Refer to Tables 10 thru 13b below for these payment rates.

Table 10 – CY 2011 Payment Amounts for 60-Day Episodes for Services Provided in a Rural Area Before Case-Mix and Wage Index Adjustment

For HHAs that Do Submit Quality Data			For HHAs that Do Not Submit Quality Data		
Proposed CY 2011 National Standardized 60-Day Episode Payment Rate	**Multiply by the 3 Percent Rural Add-On**	**Total Proposed CY 2011 National Standardized 60-Day Episode Payment Rate**	**Proposed CY 2011 National Standardized 60-Day Episode Payment Rate**	**Multiply by the 3 Percent Rural Add-On**	**Total Proposed CY 2011 National Standardized 60-Day Episode Payment Rate**
$2,198.58	X 1.03	$2,264.54	$2,155.210	X 1.03	$2,219.87

Table 11 -- Proposed Per-Visit Amounts for Services Provided in a Rural Area, Before Wage Index Adjustment						
	For HHAs that DO submit quality data			For HHAs that DO NOT submit quality data		
Home Health Discipline Type	**Proposed CY 2011 per-visit rate For HHAs that DO submit quality data**	**Multiply by the 3 Percent Rural Add-On**	**Proposed Total CY 2011 per-visit rate for Rural Areas**	**Proposed CY 2011 per-visit rate For HHAs that DO NOT submit quality data**	**Multiply by the 3 Percent Rural Add-On**	**Proposed Total CY 2011 per-visit rate for Rural Areas**
Home Health Aide	$50.57	X 1.03	$52.09	$49.57	X 1.03	$51.06
Medical Social Services	$178.99	X 1.03	$184.36	$175.46	X 1.03	$180.72
Occupational Therapy	$122.91	X 1.03	$126.60	$120.48	X 1.03	$124.09
Physical Therapy	$122.097	X 1.03	$125.75	$119.68	X 1.03	$123.27
Skilled Nursing	$111.65	X 1.03	$115.00	$109.45	X 1.03	$112.73
Speech-Language Pathology	$132.66	X 1.03	$136.64	$130.04	X 1.03	$133.94

Table 12 -- Total Proposed CY 2011 LUPA Add-On Amounts for Services Provided in Rural Areas					
For HHAs that DO submit quality data			For HHAs that DO NOT submit quality data		
Proposed CY 2011 LUPA Add-On Amount For HHAs that DO submit quality data	**Multiply by the 3 Percent Rural Add-On**	**Total Proposed CY 2011 LUPA Add-On Amount for Rural Areas**	**Proposed CY 2011 LUPA Add-On Amount For HHAs that DO NOT submit quality data**	**Multiply by the 3 Percent Rural Add-On**	**Total Proposed CY 2011 LUPA Add-On Amount for Rural Areas**
$93.58	X 1.03	$96.39	$91.74	X 1.03	$94.49

Table 13a -- Total Proposed CY 2011 Conversion Factor for Services Provided in Rural Areas					
For HHAs that DO submit quality data			For HHAs that DO NOT submit quality data		
Proposed CY 2011 Conversion Factor For HHAs that DO submit quality data	**Multiply by the 3 Percent Rural Add-On**	**Total Proposed CY 2011 Conversion Factor for Rural Areas**	**Proposed CY 2011 Conversion Factor For HHAs that DO NOT submit quality data**	**Multiply by the 3 Percent Rural Add-On**	**Total Proposed CY 2011 Conversion Factor for Rural Areas**
$50.70	X 1.03	$52.22	$49.70	X 1.03	$51.19

Table 13b – Relative Weights for the 6-Severity NRS System for Services Provided in Rural Areas

		For HHAs that DO submit quality data			For HHAs that DO NOT submit quality data		
Severity Level	Points (Scoring)	Proposed NRS Payment Amount For HHAs that DO submit quality data	Multiply by the 3 Percent Rural Add-On	Total Proposed NRS Payment Amount for Rural Areas	Proposed NRS Payment Amount For HHAs that DO NOT submit quality data	Multiply by the 3 Percent Rural Add-On	Total Proposed NRS Payment Amount for Rural Areas
1	0	$13.68	X 1.03	$14.09	$13.41	X 1.03	$13.81
2	1 to 14	$49.39	X 1.03	$50.87	$48.42	X 1.03	$49.87
3	15 to 27	$135.43	X 1.03	$139.49	$132.76	X 1.03	$136.74
4	28 to 48	$201.21	X 1.03	$207.25	$197.24	X 1.03	$203.16
5	49 to 98	$310.27	X 1.03	$319.58	$304.15	X 1.03	$313.27
6	99+	$533.64	X 1.03	$549.65	$523.11	X 1.03	$538.80

G. Enrollment Provisions for HHAs

1. HHA Capitalization

On January 5, 1998, we published a final rule in the **Federal Register** (63 FR 291) requiring newly-enrolling HHAs to submit proof that they have available sufficient funds—or "initial reserve operating funds" (IROF)—to operate the HHA for the three-month period after its provider agreement becomes effective (exclusive of actual or projected accounts receivable from Medicare and other health insurers). This rule, which added a new section 42 CFR 489.28, was prompted by our concerns about underfunded HHAs entering the Medicare program. We elaborated on this point in the preamble to the final rule (63 FR 291, at 295 (Jan. 5, 1998)):

New HHAs generally are small businesses and have the same need for adequate capitalization as have other small businesses which are just starting. As with other small businesses, a lack of funds in reserve to operate the business until a stream of revenues can be established can seriously threaten the viability of the business. In addition, for new HHAs, which are in business to render patient care services, any condition threatening the viability of the new business can adversely affect the quality of care to their patients and, in turn, the health and safety of those patients. That is, if lack of funds forces an HHA to close its business, to reduce staff, or to skimp on patient care services because it lacks sufficient capital to pay for the services, the overall well-being of the HHA's patients could be compromised. In fact, there could be the risk of serious ill effects as a result of patients not receiving adequate services.

The level of services provided to an HHA's patients is of serious concern to us for the following reason. The process by which an HHA participates in the Medicare program is one that involves a survey by us or an accrediting organization. This survey is essentially a snapshot of the agency's activities. For a new agency that is undercapitalized, it may be unable to sustain the level of services it is able to provide at the time of the survey over the period of time necessary for it to begin receiving a steady stream of revenue from Medicare. The period in question could last as long as two or even three months. Since a survey has already been conducted, the new HHA's services are not routinely inspected during this period and so there is increased danger that lack of operating funds could result in inadequate care that is not discovered.

The preamble also cited a 1997 OIG report entitled: "Home Health: Problem Providers and their Impact on Medicare" (OEI–09–96–00110), in which the OIG expressed similar worries about undercapitalized HHAs. The OIG stated:

If it were not for Medicare accounts receivable, problem agencies would have almost nothing to report as assets. Agencies tend to lease their office space, equipment, and vehicles. They are not required by Medicare to own anything, and they are almost always undercapitalized. On average, cash on hand and fixed assets amount to only one-fourth of total assets for HHAs, while Medicare accounts receivable frequently equal 100 percent of total assets. These agencies are almost totally dependent on Medicare to pay their salaries and other operating expenses. For a home health agency, there are virtually no startup or capitalization requirements. In many instances, the problem agencies lease everything without collateral. They do not even have enough cash on hand to meet their first payroll.

Medicare contractors have been carrying out the provisions of 42 CFR 489.28 since their enactment in 1998. Traditionally, the contractor has determined the provider's compliance with 489.28 prior to making its recommendation for approval to the State Agency and the CMS Regional Office (RO), which can occur several months or more before the actual provider agreement is signed by a prospective home health agency. We have worked to ensure that our contractors are consistently applying its capitalization regulations found in 42 CFR 489.28(a) which states,

An HHA entering the Medicare program on or after January 1,1998, including a new HHA as a result of a change of ownership, if the change of ownership results in a new provider number being issued, must have available sufficient funds, which we term "initial reserve operating funds," to operate the HHA for the three month period after its Medicare provider agreement becomes effective, exclusive of actual or projected accounts receivable from Medicare or other health care insurers.

Verifying the capitalization amount at various points in the enrollment process

can help CMS ensure that a prospective home health agency will have sufficient funds to operate prior to receiving approval from CMS that it is approved to participate in the Medicare program and has been conferred Medicare billing privileges. In addition, confirming capitalization more than one time during the process would address our concern that a provider that may have redirected these funds—which had originally been secured exclusively to meet the capitalization requirements—for a purpose other than to operate the business. Indeed, situations have arisen in which the HHA no longer has sufficient capitalization at the time it signs its Medicare provider agreement. This circumstance completely defeats the policy behind § 489.28 which is to ensure that an HHA is adequately capitalized when it becomes a Medicare provider. Accordingly, we believe that a prospective HHA must meet and maintain adequate capitalization during the entire period between when it first submits its enrollment application to the Medicare contractor and when the contractor conveys Medicare billing privileges to the HHA. This will ensure that the home health agency has sufficient operating funds at the time of application submission, during the period in which a State Agency or deemed accrediting organization is ensuring that the HHA meets the Conditions of Participation, prior to the issuance of a provider agreement and the conveyance of Medicare billing privileges.

To that end, we propose to require a prospective HHA to meet the capitalization requirements from the time of application submission through three months past the conveyance of Medicare billing privileges by the Medicare contractor. Further, CMS and/or its Medicare contractor must be able to verify an applicant's capitalization data at any time prior to the point at which the Medicare contractor conveys billing privileges to the HHA as well as three months thereafter. Accordingly, we are proposing that a prospective HHA be required to submit verification of compliance with § 489.28: (1) At the time of application submission, (2) during the period in which a State Agency or CMS-approved accreditation organization is making a determination as to whether the provider is in compliance with the Conditions of Participation; and (3) within the three months immediately following the issuance of a Medicare billing privileges. And while we believe that a prospective HHA should submit verification of compliance with § 489.28 within 30 days of a Medicare contractor's request, we believe that the Medicare contractor should have the ability to request and verify that an HHA continues to meet the capitalization requirements. This final step is especially important, because it would allow CMS to verify that the HHA actually had—rather than simply projecting to have had—adequate funds during the three-month period following issuance of Medicare billing privileges.

We believe that a Medicare contractor should verify that the prospective HHA is in compliance with all enrollment requirements when an enrollment application is submitted, during the period in which it is undergoing a State survey or accreditation review to determine compliance with the HHA Conditions of Participation, and before and after the issuance of Medicare billing privileges and within three months thereafter. Moreover, if a prospective HHA is determined to be out of compliance with Medicare enrollment requirements, including not meeting capitalization requirements at any time prior to the issuance of Medicare billing privileges, we believe that the Medicare contractor may deny such privileges using the specific denial reason for failing to meet this requirement which can be found in 42 CFR 424.530(a)(8) and afford the HHA with applicable Medicare appeal rights pursuant to part 498. Finally, we believe if an enrolled HHA is determined to be out of compliance with the capitalization requirements within three months after we have conveyed Medicare billing privileges, then that the Medicare contractor can revoke Medicare billing privileges using the specific revocation reason for failing to meet this requirement which can be found in § 424.535(a)(11) and afford the HHA with applicable Medicare appeal rights.

Accordingly, we are proposing to revise § 489.28(a) to include additional capitalization verification by us or its Medicare contractor during the enrollment process. Specifically, we are proposing to revise § 489.28(a) to read as set out in the regulatory text of this proposed rule.

Since it is not possible for the Medicare program to assess whether a prospective HHA is receiving reimbursement for other health care insurers, we are proposing to remove, "or other health care insurers." from § 489.28(a). In addition, we do not believe that it is necessary to require HHAs to project the number of visits within the initial three month operating period because there are incentives for prospective HHAs to under report the number of visits in order to reduce the capitalization amount. Accordingly, rather than accepting the number of site visits furnished by a prospective HHA as the basis for capitalization amount, we believe that it would be more appropriate to compare a prospective HHA with similarly situated HHAs that are already enrolled in the Medicare program. Sections § 1815(a), 1833(e), and 1861(v)(1)(A) of the Act require that providers of services participating in the Medicare program submit annual information to achieve settlement of costs for health care services rendered to Medicare beneficiaries. Also, 42 CFR 413.20 requires cost reports from providers on an annual basis. In accordance with these provisions, all home health agencies (HHAs) must complete Form HCFA–1728–94, which provides data used by the fiscal intermediaries in determining program reimbursement.

We believe that this change will deter or limit the number of undercapitalized individuals and organizations from seeking to enroll in the Medicare program. In addition, we believe that this change will help to ensure that prospective HHAs establish and maintain the amount of capital to furnish quality services to eligible beneficiaries without reimbursement from the Medicare program during the first three months of operations.

In § 489.28(c), we propose to add a new paragraph (1) to emphasize that the Medicare contractor, in selecting comparative HHAs for the purpose of calculating the enrolling HHA's required level of capitalization, shall only select HHAs that have submitted cost reports to Medicare. By reviewing the cost report, a Medicare contractor can audit costs and reimbursements. Medicare contractors have been selecting comparable HHAs using this methodology for purposes of the current requirement, but we believe that the current language in paragraph (c) should be clarified.

In 489.28(g), we propose to amend this provision to establish that CMS will only convey Medicare billing privileges to an HHA that satisfies its initial reserve operating funds requirement.

In 42 CFR 424.510, we propose to add meeting the initial reserve operating funds requirement found in § 489.28(a) as an enrollment requirement for prospective home health providers.

In 42 CFR 424.530(a)(8), we propose to deny Medicare billing privileges to a prospective HHA if they cannot furnish supporting documentation within 30 days of a contractor request that verifies that the HHA meets the initial reserve operating funds requirement found in

42 CFR 489.28(a). In addition, we propose to deny Medicare billing privileges to a prospective home health provider that fails to meet the initial reserve operating funds requirement found in 489.28(a).

Similarly, at 42 CFR 424.535(a)(8), we propose to revoke Medicare billing privileges and the corresponding provider agreement if the enrolled HHA is not able to furnish supporting documentation within 30 days of a contractor request that verifies that the HHA meets the initial reserve operating funds requirement found in 42 CFR 489.28(a).

2. Change of Ownership

In last year's home health prospective payment system final rule titled, "Medicare Program: Home Health Prospective Payment System Rate Update for Calendar Year 2010," we finalized several home health program integrity provisions. Specifically, we finalized a provision in 42 CFR 424.550(b)(1) stating that if an owner of an HHA sells (including asset sales or stock transfers), transfers or relinquishes ownership of the HHA within 36 months after the effective date of the HHA's enrollment in Medicare, the provider agreement and Medicare billing privileges do not convey to the new owner. The prospective provider/owner of the HHA must instead: (i) Enroll in the Medicare program as a new HHA under the provisions of § 424.510, and (ii) Obtain a State survey or an accreditation from an approved accreditation organization.

We received several comments supporting the establishment of the 36-month provision and did not receive any specific recommendations that we establish exceptions to the implementation of this provision.

However, since the implementation of 42 CFR 424.550(b)(1) in January 2010, we have received a number of comments regarding the impact of this provision on bona fide ownership transactions. Accordingly, we are proposing exemptions to the 36-month provision for certain legitimate transactions related to HHAs. In particular, we are proposing to revise 42 CFR 424.550(b) by adding subparagraph (2) as exemptions to 42 CFR 424.550(b)(1):

- A publicly-traded company is acquiring another HHA and both entities have submitted cost reports to Medicare for the previous five (5) years.
- An HHA parent company is undergoing an internal corporate restructuring, such as a merger or consolidation, and the HHA has submitted a cost report to Medicare for the previous five (5) years.
- The owners of an existing HHA decide to change the existing business structure (*e.g.,* partnership to a limited liability corporation or sole proprietorship to subchapter S corporation), the individual owners remain the same, and there is no change in majority ownership (*i.e.,* 50 percent or more ownership in the HHA.)
- The death of an owner who owns 49 percent or less (where several individuals and/or organizations are co-owners of an HHA and one of the owners dies) interest in an HHA.

It is important to note that while we are proposing the aforementioned exceptions, we remain concerned that a significant number of HHAs have—and will continue to attempt to—participate in a practice often referred to as a "certificate mill." Under this scenario, which we addressed in the 2010 HH PPS rule, entrepreneurs apply for Medicare certification, undergo a survey, and, become enrolled in Medicare, but then immediately sell the agency without having seen a single Medicare beneficiary or hired a single employee. These brokers, in other words, enroll in Medicare exclusively to sell the HHA, rather than to provide services to beneficiaries. This practice allows a purchaser of an HHA from the broker to enter the Medicare program without having to undergo a State survey, which, in turn, often leads to that owner selling the business very soon thereafter to someone else. The "flipping" mechanism is used to circumvent the State survey process. It is for this reason, that we maintain that 42 CFR 424.550(b)(1) is necessary to eliminate the "certificate mill" process.

3.

3. Change in Majority Ownership Within 36 Months of Initial Enrollment or Change in Ownership

Section 1124 of the Social Security Act requires that: (1) All persons and organizations with a 5 percent or greater ownership interest in the provider, and (2) all partners in a partnership (if, of course, the provider is established as a partnership), be reported to us. Accordingly, we believe that HHAs and other provider organizations must report a change of ownership of 5 percent of more of the equity in the company.

However, we recognize that in many cases a small change in ownership (*e.g.,* 5 percent) does not result in fundamental change of ownership by the majority owner or owner(s) and should not necessarily require a new enrollment and State survey or meet the deemed-accreditation status. However, we are concerned that prospective HHA owners can circumvent the spirit and intent of § 424.550(b)(1) by incrementally increasing their level of ownership to the point where they could effectively assume 51 percent or more ownership of an HHA without having to enroll as a new provider or undergo a State survey or obtain deemed accreditation status by a CMS-approved accreditation organization. For instance, an owner, with a 30 percent ownership interest could purchase an additional 20 percent, plus one (1) share stake in the company by submitting four separate changes of information to the Medicare contractor. The end result is that the HHA would then be owned by an individual or organization for whom—because of his or her ability to avoid having to undergo a State survey or obtain accreditation due to his or her incremental purchases—we cannot determine their commitment to furnishing quality services to Medicare beneficiaries.

Accordingly, in § 424.550(a)(1) we are proposing that any change in majority control and/or ownership during the first 36 months of when the HHA is initially conveyed Medicare billing privileges or the last change of ownership (including asset sale, stock transfer, merger or consolidation) would trigger the provisions of § 424.550(b)(1). We believe that this approach would allow individuals or organizations to purchase or sell an ownership interest in an HHA as long as it did not change majority ownership or control within the first 36 months of ownership.

Consequently, we are proposing a definition of "Change in Majority Ownership" to mean an individual or organization acquires more than 50 percent interest in an HHA during the 36 following the initial enrollment into the Medicare program or a change of ownership (including asset sale, stock transfer, merger, or consolidation). This includes an individual or organization that acquires majority ownership in an HHA through the cumulative effect of asset sales, stock transfers, consolidations, and/or mergers during a 36-month period.

H. Home Health Face-to-Face Encounter

Sections 1814(a)(2)(C) and 1835(a)(2)(A) of the Act require a plan of care for furnishing home health services be established and periodically reviewed by a physician in order for Medicare payments for those services to be made. The physician is responsible for certifying that the individual is confined to his or her home and needs skilled nursing care on an intermittent basis or physical or speech therapy. The

plan for furnishing such services has to be established, and updated when appropriate, by the beneficiary's physician.

In recent years MedPAC has reported that the Medicare eligibility criteria for the home health benefit are broad and open to different interpretations by clinicians. *See Report to the Congress: Medicare Payment Policy (March 2004).* The 2010 MedPAC report continues to cite the complexity of Medicare's requirements for home health eligibility, and recommends that physicians may benefit from the information gained by an in-person examination. MedPAC further states that "establishing clear expectations for the purpose of these examinations would be critical to ensuring their effectiveness" [MedPAC report dated March 2010, p. 216].

On March 23, 2010, the Patient Protection and Affordable Care Act (The Affordable Care Act) of 2010 (Pub. L. 111–148) was enacted. Section 6407(a) (amended by section 10605) of The Affordable Care Act amends the requirements for physician certification of home health services contained in Sections 1814(a)(2)(C) and 1835(a)(2)(A) by requiring that, prior to making such certification, the physician must document that the physician himself or herself or specified non-physician practitioner has had a face-to-face encounter (including through the use of telehealth, subject to the requirements in section 1834(m) of the Act), with the patient incident to the services involved.

The Affordable Care Act describes non-physician practitioners who may perform this face-to-face patient encounter as a nurse practitioner or clinical nurse specialist (as those terms are defined in section 1861(aa)(5) of the Act), who is working in collaboration with the physician in accordance with State law, or a certified nurse-midwife (as defined in section 1861(gg) of the Act, as authorized by State law), or a physician assistant (as defined in section 1861(aa)(5) of the Act), in accordance with State law and under the supervision of the physician. The Affordable Care Act provision does not amend the statutory requirement that a physician must certify a patient's eligibility for Medicare's home health benefit. Rather the provision allows for specific non-physician practitioners to perform the face-to-face encounter with the patient in lieu of the certifying physician, and inform the physician making the initial certification for eligibility for the Medicare home health benefit. The certifying physician must document the face-to-face encounter regardless of whether the physician himself or herself or one of the permitted non-physician practitioners perform the face-to-face encounter. The Affordable Care Act gives the Secretary the discretion to set a reasonable timeframe for this encounter.

We believe that the face-to-face encounter statutory provision was enacted to strengthen physician accountability in certifying that home health patients meet home health eligibility requirements. We also believe that in order to achieve this goal, the encounter must occur close enough to the home health start of care to ensure that the clinical conditions exhibited by the patient during the encounter are related to the primary reason for the patient's need for home health care. As such, we believe that encounters would need to occur closer to the start of home health care than the six month period prior to certification recommended, but not required by The Affordable Care Act for Part B services. Therefore we propose revising § 424.22(a)(1)(v) such that for initial certifications, prior to a physician signing that certification and thus certifying a patient's eligibility for the Medicare home health benefit, the physician responsible for certifying the patient for home health services must document that a face-to-face patient encounter (including through the use of telehealth if appropriate) has occurred no more than 30 days prior to the home health start-of-care date by himself or herself, or by an authorized non-physician practitioner (as specified in sections 1814(a)(2)(C) and 1835(a)(2)(A) of the Act) working in collaboration with or under the supervision of the certifying physician as described above.

We believe that in many cases, a face-to-face encounter with a patient within the 30 days prior to the home health episode start of care will provide the certifying physician a current clinical presentation of the patient's condition such that the physician can accurately certify home health eligibility, and in conjunction with the home health agency, can establish an effective care plan. We also believe that a face-to-face encounter which occurs within 30 days prior to the home health start of care would be generally relevant to the reason for the patient's need for home health services, and therefore such a face-to-face would be sufficient to meet the goals of this statutory requirement. However, if a face-to-face encounter occurs within 30 days of the start of the home health episode, but the clinical condition of the patient changes significantly between the time of the face-to-face encounter and the home health episode of care such that the primary reason the patient requires home health care is unrelated to the patient's condition at the time of the face-to-face encounter, this encounter would not satisfy the requirement. Rather, in this case, we propose revising § 424.22(a)(1)(v)(B) such that the certifying physician, or authorized non-physician practitioner, must have another face-to-face encounter (which may include the use of telehealth, subject to the requirements in section 1834(m) of the Act and subject to the list of Medicare telehealth services established in the most recent year's physician fee schedule regulations) with the patient within two weeks after the start of the home health episode. The certifying physician must document the face-to-face encounter, along with the clinical findings of that encounter as part of the signed and dated certification. This documentation must be clearly titled, dated, and signed by the certifying physician. Because the patient's clinical condition significantly changed, we believe that a more contemporaneous visit is needed to ensure the certifying physician can accurately certify the patient's eligibility for services, and effectively plan the patient's care.

Similarly, we propose to revise § 424.22(a)(1)(v)(B) to reflect that if a home health patient has not seen the certifying physician or one of the specified non-physician practitioners as described above, in the 30 days prior to the home health episode start of care, the certifying physician or non-physician practitioner, would be required to have a face-to-face encounter (including the use of telehealth, subject to the requirements in section 1834(m) of the Act and subject to the list of Medicare telehealth services established in the most recent year's physician fee schedule regulations) with the patient within two weeks after the start of the home health episode to comply with the requirements for payment under the Medicare Program.

We also propose to revise § 424.22(a)(1)(v) so that the certifying physician's documentation of the face-to-face encounter would clearly state that either the certifying physician himself or herself, or the applicable non-physician practitioner has had a face-to-face encounter with the patient and would include the date of that encounter. The documentation would also describe how the clinical findings of that encounter supported the patient's eligibility for the Medicare home health benefit. Specifically, the physician would document how the clinical findings of the encounter supported findings that the patient was homebound and in need of intermittent

skilled nursing and/or therapy services, as defined in § 409.42(a) and § 409.42(c) respectively. The certifying physician would be required to sign and date the documentation entry into the certification and document the face-to-face encounter in his/her practice's medical record. As such the physician's medical keeping for that patient must be consistent with, and supportive of, the required documentation of the face-to-face encounter as part of the certification.

Again, the certifying physician's documentation of the face-to-face patient encounter would be either a separate and distinct area on the certification or a separate and distinct addendum to the certification that was easily identifiable and clearly titled.

If an allowed non-physician practitioner was conducting the face-to-face visit, that practitioner would have to document the clinical findings of the face-to-face patient encounter and communicate those findings to the certifying physician, so that the certifying physician could document the face-to-face encounter accordingly, as part of the signed certification. Section 409.41 of the CFR states that in order for home health services to qualify for payment under the Medicare program the physician certification requirements for home health services must be met in compliance with § 424.22. Therefore, if the patient's certifying physician did not document that a face-to-face encounter occurred no more than 30 days prior to the home health start of care date or two weeks after the start of care date, the services would not qualify for payment under the Medicare program.

Additionally our regulations at § 424.22 require a physician's signature for certification and recertification of the need for home health care. To strengthen our regulations to mirror our longstanding manual policy and to achieve consistency with the proposed timing and documentation of the face-to-face encounter, we propose to revise our certification and recertification requirements at § 424.22 to require that these documents must include the date and signature of the physician.

As defined in 42 CFR 411.354, certifying physicians are not permitted to have a financial relationship with the HHA, unless one of the exceptions in section 1877 of the Act is met. Similarly, we would preclude non-physician practitioners from performing a face-to-face encounter for the purpose of informing the certifying physician, as described in sections 1814 and 1835 of the Act, if the non-physician practitioner was an employee of the HHA. We propose to apply this prohibition by revising § 424.22(d) to not allow non-physician practitioners to perform a face-to-face encounter, if employed by the HHA, as defined by Section 210(j) of the Act.

When a physician is certifying a patient for home health services, the physician is certifying that the patient is confined to his home and in need of intermittent skilled nursing or therapy services. Therefore, physicians must utilize their intimate knowledge of the patient's medical condition to determine the patient's health care needs. We believe that physician involvement is very important in maintaining quality of care under the Medicare home health benefit and ensure appropriate use of the benefit. Thus, the fundamental goals of physician certification are strengthened by the new requirement for a face-to-face patient encounter.

As such, we are proposing to revise 42 CFR 424.22(a)(1) by adding language to set timing requirements for the face-to-face patient encounter, to ensure that the face-to-face patient encounter is related to the primary reason the patient requires home health services, and to set encounter documentation requirements. We are also proposing that non-physician practitioners be precluded from performing a face-to-face encounter for the purpose of informing the certifying physician, as described in sections 1814 and 1835 of the Act, if the non-physician practitioner is an employee of the HHA, as defined by Section 210(j) of the Act.

We propose implementing the above face-to-face patient encounters provisions as they relate to home health episodes beginning 1/1/2011 and later.

I. Solicitation of Comments: Future Plans to Group HH PPS Claims Centrally During Claims Processing

Generally speaking, Medicare makes payment under the HH PPS on the basis of a national standardized 60-day episode payment rate that is adjusted for case-mix and geographic wage variations. The national standardized 60-day episode payment rate includes the six home health disciplines (skilled nursing, home health aide, physical therapy, speech language pathology, occupational therapy, and medical social services) and non-routine medical supplies. Durable medical equipment covered under home health is paid for outside the HH PPS payment. To adjust for case-mix, the HH PPS uses a 153-category case-mix classification to assign patients to a home health resource group (HHRG). Clinical needs, functional status, and service utilization are computed from responses to selected data elements in the Outcome & Assessment Information Set (OASIS) instrument. On Medicare claims, the HHRGs are represented as Health Insurance Prospective Payment System (HIPPS) codes.

At a patient's start of care, and at the start of each subsequent 60 day episode, and when a patient's condition changes significantly, the HHA is required to perform a comprehensive clinical assessment of the patient and complete the OASIS assessment instrument. The OASIS instrument collects data concerning 3 dimensions of the patient's condition: (1) Clinical severity (orthopedic, neurological or diabetic conditions, *etc.*), (2) Functional status (comprised of 6 activities of daily living {ADL}), and (3) Service utilization (therapy visits provided during episode). HHAs enter data collected from their patients' OASIS assessments into a data collection software tool. For Medicare patients, the data collection software invokes HH PPS Grouper software to assign a HIPPS code to the patient's OASIS assessment. The HHA includes this HIPPS code on the Medicare HH PPS bill, ultimately enabling CMS' claims processing system to reimburse the HHA for services provided to patients receiving Medicare's home health benefit.

Additionally, the HHA is required to electronically submit OASIS assessments for their Medicare and Medicaid patients to CMS via their State agency. On the HH PPS public Web site at *http://www.cms.gov/homehealthpps/01_overview.asp,* CMS provides a free OASIS assessment data collection tool (HAVEN) which includes the HH PPS grouper software, a separate HH PPS grouper program which can be incorporated into an HHA's own data collection software, and HH PPS data specifications for use by HHAs or software vendors desiring to build their own HH PPS grouper. Most HHAs do not use the HAVEN freeware, instead preferring to employ software vendors to create and maintain a customized assessment data collection tool which can be integrated into the HHA's billing software. Likewise, many vendors employed by HHAs do not utilize the HH PPS grouper freeware, instead preferring to build their own HH PPS grouper from the data specifications which CMS provides.

In 2008, CMS deployed the first refinements to the HH PPS since its inception in 2000. Prior to the 2008 refinements, CMS made infrequent, minor changes to the HH PPS grouper software. Effective with the refinements, the HH PPS grouper became more

complex and more sensitive to the yearly ICD–9–CM code changes. As a result, since 2008 HHAs have been required to update their HH PPS grouper software at least once each year. Most HHAs employ software vendors to effectuate these updates. HHAs have expressed concerns to CMS that the frequent grouper updates coupled with the additional complexity of the grouper has resulted in unexpected costs and an increased burden to them.

Also, since the 2008 refinements were implemented, CMS has identified a significant increase in OASIS assessments submitted with erroneous HIPPS codes. These errors occur when HHAs and/or their software vendors inaccurately replicate the HH PPS grouper algorithm into the HHA's customized software. The significant increase in these errors since 2008 suggests that many HHA software vendors are struggling to accurately replicate the complex algorithms in the HH PPS grouper. CMS informs HHAs when the submitted HIPPS on the OASIS is inaccurate and provides HHAs with the correct HIPPS to enable the HHA to accurately bill Medicare. However, HHAs have expressed concerns that the HH PPS grouper complexities increase their vulnerability to submit an inaccurate HIPPS code on the Medicare bill. Further, some HHAs have expressed concern that this vulnerability will further increase when CMS begins requiring use of ICD–10–CM codes instead of ICD–9–CM codes because the ICD–10–CM migration will require major changes to an already complex HH PPS grouper.

Because of these concerns, we have begun analyzing options to streamline the process which assigns HIPPS codes. We are analyzing options which would enable CMS to assign HIPPS codes to the HH PPS bills during claims processing. If we were successful in implementing this option, OASIS assessment data collection tools would no longer invoke HH PPS grouper software to assign HIPPS codes to the OASIS assessments. Further, HHAs would no longer be required to include HIPPS codes on HH PPS bills. Such a process would relieve the HHA of all responsibility associated with the HH PPS grouper. If we can centralize the assignment of the HIPPS code to the HH PPS bill during claims processing, we will achieve process efficiencies, improve payment accuracy by improving the accuracy of the bill's HIPPS code, decrease costs and burden to HHAs, while also better position HHAs and CMS for an easier transition from ICD–9 to ICD–10 codes in the future.

Several changes have occurred recently that allow us to consider this option. National claims coding standards have expanded the number of positions of data available in the treatment authorization field on the bill from 18 to 30. In addition, the National Uniform Billing Committee has created occurrence code 50 for assessment reference dates. This new code will allow a separate field for HHAs to report the M0090 assessment date currently carried in the treatment authorization field. These two changes provide enough space on the HH PPS bill for HHAs to encode all the OASIS payment items on the bill, potentially enabling CMS to compute the HIPPS code during claims processing.

However, a major challenge exists with the feasibility of computing the HH PPS group during claims processing. A centralized HH PPS grouper would look to the diagnoses on the HH PPS bill for grouping. The Health Insurance Portability and Accountability Act (HIPAA) authorized us to require that all diagnoses on the bill comply with ICD–9–CM coding guidelines as set out at 45 CFR 162.1002 (65 FR 50370, August 17, 2000). Currently, when certain conditions apply, to prevent the loss of case mix points, the HH PPS grouper will award case-mix points to some diagnoses reported as a secondary diagnosis when the assignment is performed to comply with ICD–9–CM coding requirements. CMS currently instructs HHAs to report these diagnoses in M1024 (previously M0246) on the OASIS to prevent loss of case mix points.

We provide detailed guidance on this topic in page 5 of Appendix D within the OASIS Implementation Manual, which can be accessed at *http://www.cms.gov/HomeHealthQualityInits/downloads/HHQIAttachmentD.pdf.* This coding guidance has been provided to prevent the loss of case mix points when an underlying case mix diagnosis is associated with the primary V-code diagnosis.

As required by 45 CFR 162.1002, those diagnoses currently encoded in M1024 (formerly M0246) which should not be reported as primary or secondary diagnoses cannot be reported on the bill. In an attempt to solve this challenge, CMS is analyzing options to map diagnoses currently reported in M1024 (formerly M0246) to diagnoses that are reportable as primary and secondary diagnoses in the home health setting, per ICD–9–CM coding guidelines. We have been encouraged with our ability to map some trauma codes reported in M1024 to after-care codes which are reportable as primary and secondary diagnoses in the home health setting. However, additional analysis and mapping are needed to fully resolve this challenge.

We are soliciting public comment on this potential enhancement, described above, to assign the HIPPS code to the HH PPS bill during claim processing. This would require HHAs to report all the OASIS items necessary to group the episode on the HH PPS bill. As stated above, doing so would address the costs and burden HHAs currently experience with regards to frequent updates of a complex HH PPS grouper, address vulnerabilities that HHAs have associated with the possible submission of inaccurate HIPPS codes on the claim, while better positioning HHAs and CMS for the ICD–9 to ICD–10 transition. We are in the early stages of assessing the feasibility of such changes, and wanted to seize the opportunity to solicit the public for their comments on this topic.

J. Proposed New Requirements Affecting Hospice Certifications and Recertifications

In its March 2009 *Report to Congress,* MedPAC wrote that additional controls are needed to ensure adequate accountability for the hospice benefit. MedPAC reported that greater physician engagement is needed in the process of certifying and recertifying patients' eligibility for the Medicare hospice benefit. The Commission reported that measures to ensure accountability would also help ensure that hospice is used to provide the most appropriate care for eligible patients. They recommended these measures be directed at hospices that tend to enroll very long-stay patients. Specifically, MedPAC recommended that a hospice physician or advanced practice nurse visit the patient to determine continued eligibility prior to the 180-day recertification and each subsequent recertification, and attest that such visits took place. MedPAC, *Report to the Congress: Medicare Payment Policy,* Chapter 6, March 2009, pp. 365–371.

Section 3132 of The Affordable Care Act requires hospices to adopt MedPAC's hospice program eligibility recertification recommendations. Specifically, the bill amends section 1814(a)(7) of the Social Security Act to require that on and after January 1, 2011, a hospice physician or nurse practitioner (NP) must have a face-to-face encounter with every hospice patient to determine the continued eligibility of that patient prior to the 180-day recertification, and prior to each subsequent recertification. Furthermore, the bill requires that the hospice physician or NP attest that such

a visit took place, in accordance with procedures established by the Secretary of the Department of Health and Human Services. The Affordable Care Act provision does not amend the statutory requirement that a physician must certify and recertify a patient's terminal illness, and thus NPs continue to not be allowed to certify the terminal illness. Rather, the provision allows for a NP to furnish a face-to-face encounter; the NP would then provide the clinical findings from that encounter to the physician who is considering recertifying the patient. This new statutory requirement will better enable hospices to comply with hospice eligibility criteria, and to identify and discharge patients who do not meet those criteria.

Hospices which admit a patient who received hospice services previously (from the admitting hospice or from another hospice) must consider the patient's entire Medicare hospice stay to determine which benefit period the patient is in, and whether a face-to-face visit will be required for recertification.

As required by the Affordable Care Act, we are making several proposals regarding 42 CFR 418.22(a)(3), (a)(4), (b)(3), (b)(4), and (b)(5) in order to implement this new statutory requirement. Required visits should be fairly close to the recertification date, so that the visit allows a current assessment of the patient's continued eligibility for hospice services. These visits can be scheduled in advance, particularly for those patients with diagnoses where life expectancy is harder to predict. At § 418.22(a)(4) we propose that hospice physicians or NPs make these required visits no more than 15 calendar days prior to the 180-day recertifications and subsequent recertifications, and that the visit findings be used by the certifying physician to determine continued eligibility for hospice care. This 15-day timeframe also aligns the timeframes for recertification visits with that required for the comprehensive assessment update, as specified in our Conditions of Participation (CoPs) at § 418.54(d). This timeframe requirement is also consistent with the timeframe required for the review of the plan of care, as specified in our CoPs at § 418.56(d). The 15-day timeframe provides a balance between flexibility in scheduling the visit, and enabling a relatively current assessment of continued eligibility while also allowing efficiency in update and review processes as required by the hospice CoPs.

As noted above, the statute requires that the face-to-face encounter be used to determine the patient's continued eligibility for hospice services. We propose that the clinical findings gathered by the NP or by the physician during the face-to-face encounter with the patient be used in the physician narrative to justify why the physician believes that the patient has a life expectancy of 6 months or less. We propose to add this requirement to 418.22(b)(3) as subparagraph(v).

The statute also requires the hospice physician or NP to attest that the face-to-face encounter occurred. Again we reiterate that while NPs can make these visits and attest to them, by statute only a physician may certify the terminal illness. Therefore, at § 418.22(b)(4) we propose that the face-to-face attestation and signature be either a separate and distinct area on the recertification form, or a separate and distinct addendum to the recertification form, that is easily identifiable and clearly titled. We also propose that the attestation language be located directly above the physician or NP signature and date line.

The attestation is a statement from the physician or NP which attests that he or she had a face-to-face encounter with the patient, and that the clinical findings of that encounter have been provided to the certifying physician for use in determining continued eligibility for hospice care. The attestation should include the name of the patient visited, the date of the visit, and be signed and dated by the NP or physician who made the visit. Hospices are free to use other attestation language, provided that it incorporates these required elements. These elements would be suitable whether the visit is made by an NP or a physician. It is possible that the certifying hospice physician is the same physician who made the visit.

We propose revising our regulations at § 418.22 to incorporate these requirements. Specifically, we propose adding subsections (a)(4) and (b)(4) to implement the requirements for a face-to-face encounter with long-stay hospice patients and the attestation of that face-to-face encounter.

In proposing a required timeframe in which the face-to-face encounter must occur, for consistency, we believe it is important to also propose to clarify required timeframes for all certifications and recertifications. Long-standing guidance in our Medicare Benefit Policy Manual's chapter on hospice benefit policy allows the initial certification to be completed up to 14 days in advance of the election, but is silent on the timeframe for advance completion of recertifications (*see* CMS Pub. No. 100–02, chapter 9, section 20.1). To clarify our policy in the regulations, and to be consistent with the proposed timeframe for the newly legislated face-to-face encounter for recertifications, we propose that both certifications and recertifications must be completed no more than 15 calendar days prior to either the effective date of hospice election (for initial certifications), or the start date of a subsequent benefit period (for recertifications). This proposal is also in keeping with the CoP timeframe for updating the comprehensive assessment (418.56(d)), and with the CoP timeframe for reviewing the plan of care (418.54(d)). Finally, this proposed 15-day advance certification or recertification timeframe would also help ensure that the decision to recertify is based on current clinical findings, enabling greater compliance with Medicare eligibility criteria. Congress' desire for increased compliance with Medicare eligibility criteria is one factor which we believe led to the new statutory requirements. We propose to revise § 418.22(a)(3) to reflect the above proposals.

Furthermore, longstanding manual guidance stipulates that the physician(s) must sign and date the certification or recertification. However, the HHS Office of Inspector General recently found that certifications for some hospice patients failed to meet Federal requirements, including those with no signatures [HHS OIG, "Medicare Hospice Care for Beneficiaries in Nursing Facilities: Compliance with Medicare Coverage Requirements, September 2009"]. In keeping with Congress's desire for increased compliance with Medicare eligibility criteria, and to achieve consistency with the proposed 180-day recertification attestation requirements, we propose to add language to the certification requirements in our regulations to clarify that these documents must include the signature(s) of the physician(s) and the date each physician signed.

With the new statutory requirements for a face-to-face encounter prior to the 180-day recertification, and for every recertification thereafter, it is important for hospices to easily identify which benefit periods require a recertification visit. Because hospice patients are allowed two 90-day benefit periods followed by an unlimited number of 60-day benefit periods, every 60-day benefit period is by definition beyond the 180-day recertification. We do not currently require that certifications or recertifications show the dates of the benefit period to which they apply, so we propose to add language to our certification and recertification regulations to make this a requirement for all hospices. While many hospices already include this information, there are some that do not. Having the benefit

period dates on the certification makes it easier for the hospice to identify those benefit periods which require a face-to-face encounter and will ease enforcement of this new statutory requirement.

A valid certification or recertification is a requirement for Medicare coverage under the Social Security Act at section 1814(a)(7)(A). Additionally, the Act at 1814(a)(7)(D) now also requires a face-to-face encounter with patients who reach the 180-day recertification. Changing our regulations to require the physician's signature(s), date signed, and benefit period dates on the certification or recertification is necessary to determine if these documents are valid, and to ease the implementation of the new statutory requirements. Because we believe these proposed requirements establish in regulation that which are current practice in the hospice industry, we do not believe that these proposals will be burdensome to hospices. As such, we propose adding § 418.22(b)(5) to our regulations to incorporate these signature and date requirements.

III. Collection of Information Requirements

Under the Paperwork Reduction Act of 1995, we are required to provide 60-day notice in the **Federal Register** and solicit public comment before a collection of information (COI) requirement is submitted to the Office of Management and Budget (OMB) for review and approval. In order to fairly evaluate whether an information collection should be approved by OMB, section 3506(c)(2)(A) of the Paperwork Reduction Act of 1995 requires that we solicit comment on the following issues:

- The need for the information collection and its usefulness in carrying out the proper functions of our agency.
- The accuracy of our estimate of the information collection burden.
- The quality, utility, and clarity of the information to be collected.
- Recommendations to minimize the information collection burden on the affected public, including automated collection techniques.

We are soliciting public comment on each of these issues for the following sections of this document that contain information collection requirements (ICRs):

A. ICRs Regarding Therapy Coverage Requirements

As described previously in this proposed rule, we are clarifying our coverage requirements for skilled services provided by therapists, which are described in 42 CFR 409.44(c). Our proposed clarifications include requirements to: document necessity for a course of therapy (§ 409.44(c)(1)); include clinic notes which reflect progress toward goals, which incorporate the functional assessment and reassessments, which justify medical necessity, which describe the content of progress notes, and which include objective evidence of the expectation that the patient's condition will improve (§ 409.44(c)(2)(i)); document any variable factors that influence the patient's condition or affect the patient's response to treatment, and include objective measurements of progress toward goals in the clinical record (409.44(c)(2)(iv)).

These proposed clarifications to our coverage requirements in § 409.44(c) are already part of our current Conditions of Participation (CoPs) and are approved under OMB# 0938–1083. The current CoPs at § 484.12 already require that the HHA and its staff comply with accepted professional standards and principles that apply to professionals furnishing services in an HHA. Those accepted professional standards include complete and effective documentation, such as we described in our proposals. Additionally, § 484.32 of the CoPs already requires in part that the therapist prepare clinical and progress notes. Section 484.55 of the CoPs already requires that HHAs provide a comprehensive assessment that "accurately reflects the patient's current health status and includes information that may be used to demonstrate progress toward achievement of desired outcomes". Because these proposed clarifications to our coverage requirements in § 409.44(c) reflect longstanding policy from our CoPs as well as from accepted standards of clinical practice, we believe that these proposed requirements will not create any additional burden on HHAs.

Additionally, our coverage regulations at § 409.44(c)(2)(i) already mandate that for therapy services to be covered in the home health setting, the services must be considered under accepted practice to be a specific, safe, and effective treatment for the beneficiary's condition. We proposed revising § 409.44(c)(2)(i) to require a functional assessment on the 13th and 19th therapy visit, and at least every 30 days, to determine continued need for therapy services, and to ensure material progress toward goals. The functional assessment does not require a special visit to the patient, but is conducted as part of a regularly scheduled therapy visit. Functional assessments are necessary to demonstrate progress (or the lack thereof) toward therapy goals, and are already part of accepted standards of clinical practice, which include assessing a patient's function on an ongoing basis as part of each visit.

Our current CoPs at § 484.55 already require that HHAs "identify the patient's continuing need for home care * * *". Functional assessments of therapy need guide HHAs in determining whether continued therapy is necessary. Therefore, we believe that the proposed requirement to perform a functional assessment at the 13th and 19th visits, and at least every 30 days, will also not create any burden on HHAs. Rather, we have clarified the minimum timeframes for functional assessments in the coverage regulations. Longstanding CoP policy at § 484.55 requires HHAs to document progress toward goals; therefore, we again do not believe that performing or documenting functional assessments at these 3 time-points would create a new burden. Both the functional assessment and its accompanying documentation are already part of existing HHA practices and accepted standards of clinical practice, and are approved under OMB# 0938–1083. Therefore, we do not believe these proposed requirements place any new documentation requirements on HHAs. We also believe that a prudent home health agency would self-impose these requirements in the course of doing business.

We are revising the currently approved PRA package (OMB #0938–1083) to describe these clarifications to the regulatory text.

B. ICRs Regarding HHA Capitalization

As stated above, we propose to revise § 489.28(a) to clarify that a newly enrolling HHA must consistently maintain sufficient capitalization between the time it submits its enrollment application until three months after its provider agreement becomes effective. This means the HHA will be required to submit proof of capitalization at multiple points during this period. For purposes of these collection requirements only, we estimate that a newly enrolling HHA will be required to submit such proof 3 times prior to receiving Medicare billing privileges, and that the burden involved in doing so will be 1.5 hours on each occasion. We further project that 500 newly enrolling HHAs (of which 200 will ultimately become enrolled) will be asked to provide this data. The total annual burden will therefore be 2,250 hours (500 HHAs × 3 submissions × 1.5 hours), as reflected in Table 14 below.

TABLE 14 - ESTIMATED ANNUAL REPORTING AND RECORDKEEPING BURDEN					
OMB #	Requirement	Respondents	Responses	Hr. Burden	Total
None	489.28(a)	500	500	4.5	2,250

C. ICRs Regarding the Home Health Face-To-Face Encounter Requirement

The Affordable Care Act of 2010 amends the requirements for physician certification of home health services contained in sections 1814(a)(2)(C) and 1835(a)(2)(A) by requiring that prior to certifying a patient as eligible for home health services, the physician must document that the physician himself or herself or specified non-physician practitioner has had a face-to-face encounter (including through the use of telehealth). The Affordable Care Act provision does not amend the statutory requirement that a physician must certify a patient's eligibility for Medicare's home health benefit (*see* sections 1814(a)(2)(C) and 1835(a)(2)(A) of the Act). In this proposed rule, we propose that § 424.22(a)(1)(v) require the certifying physician sign and date the documentation entry into the certification that the face-to-face patient encounter occurred no more than thirty days prior to the home health start of care date by himself or herself, or by an allowed non-physician practitioner for initial certifications. We are proposing that the certifying physician's documentation of the face-to-face patient encounter be either a separate and distinct area on the certification, or a separate and distinct addendum to the certification, that is easily identifiable and clearly titled, dated, and signed by the certifying physician, and that it include the clinical findings of that encounter.

The burden associated with the documentation requirement for the patient's face-to-face encounter by the physician and certain allowed non-physician practitioners includes the time for each home health agency to develop a revised certification form or certification addendum which the HHA provides to the physician. The revised certification form or addendum to the certification must allow the physician to record that a face-to-face patient encounter has occurred. The revised form or addendum must also include the patient's name, a designated space for the physician to provide the date of the patient encounter, a designated space for the physician's documentation of the face-to-face encounter, and a designated space for the physician to provide his/her signature and the date signed.

There were 9,432 home health agencies that filed claims in CY 2008. We estimate it would take each HHA 15 minutes of the home health administrator's time to develop and review the above described form language and 15 minutes of clerical time for each HHA to revise their existing initial certification form or to create an addendum with that form language. The estimated total one-time burden for developing the patient encounter form would be 4,716 hours.

The certifying physician's burden for composing the face-to-face documentation which includes how the clinical findings of the encounter support eligibility; writing, typing, or dictating the face-to-face documentation; signing, and dating the patient's face-to-face encounter is estimated at 5 minutes for each certification. We estimate that there would be 2,926,420 initial home health episodes in a year based on our 2008 claims data. As such, the estimated burden for documenting, signing, and dating the patient's face-to-face encounter would be 243,868 hours for CY 2011.

We reiterate that our longstanding policy has been that physicians must sign and date the certification statement that the patient is in need of home health services and meets the eligibility requirements to receive the benefit. Therefore, our making this requirement explicit in the regulation poses no additional burden to home health agencies.

Additionally, it has been our longstanding manual policy that physicians must sign and date the certification and any recertifications. Our current regulations only address the physician's signing of the certification and recertification. In this rulemaking, we are proposing to strengthen our regulations at § 424.22 to achieve consistency with the proposed timing and documentation of the face-to-face encounter and to mirror our longstanding manual policy by revising our regulations to make it a requirement that physicians not only sign, but also date certifications and recertifications. Because it has been our longstanding manual policy that physicians sign and date certifications and recertifications, and we are merely making this requirement explicit in our regulations, there is no additional burden to physicians.

Based on the criteria for payment of physician supervision of a patient receiving Medicare-covered services provided by a participating home health agency as stipulated in the description of HCPC code G0181, our making the patient encounter requirement explicit in the regulation poses no additional burden to physician offices. Table 15a and 16a below summarizes the burden estimate associated with these requirements.

TABLE 15a. ESTIMATED ONE-Time FORM DEVELOPMENT BURDEN					
OMB#	Requirement	HHAs	Responses	Hr. Burden	Total
0938-1083	424.22(a)(1)(v)	9,432	1	.5 hours	4,716 hours

TABLE 16a. ESTIMATED PHYSICIANS BURDEN for DOCUMENTING, SIGNING AND DATING ENCOUNTER					
OMB#	Requirement	Patients	Responses	Hr. Burden	Total
0938-1083	424.22(a)(1)(v)	2,926,420	1	.0833333	243,868 hours

Details of our burden estimates are available in the Paperwork Reduction Act (PRA) package approved under OMB# 0938–1083. We are revising this currently approved package to incorporate these requirements.

D. ICRs Regarding the Requirements for Hospice Certification Changes

As described previously in this proposed rule, as of January 1, 2011 the Affordable Care Act requires physicians or NPs to attest that they determined continued hospice eligibility through a face-to-face encounter with all hospice patients prior to the 180-day recertification. We proposed that § 418.22(b)(4) require the physician or NP to sign and date an attestation statement that he or she had a face-to-face encounter with the patient, and include the date of that visit. This attestation would be a separate and distinct part of the physician recertification, or an addendum to the physician recertification.

The burden associated with this attestation requirement would be the time for each hospice to develop simple attestation language to attach as an addendum or include as part of the recertification document, and the time for the physician or NP to include the patient name, the date that the patient was visited, the visiting physician or NP signature, and the date signed. As of February 2010, there were 3,429 hospices with claims filed in FY 2009. We estimate it would take each hospice 15 minutes of administrative time to develop and review the attestation language, and 15 minutes of clerical time to revise their existing recertification form or to create an addendum. The estimated total one-time burden for developing the attestation form would be 1,714 hours.

The burden for completing the attestation form is estimated at 30 seconds for each recertification at 180 days or beyond. We used the distribution of lengths of stay from hospice claims data to estimate the percentage of patients who required recertification at 180 days, and at subsequent 60-day benefit periods. We estimated that there would be 457,382 recertifications at 180 days or beyond, each of which requires an attestation. We assume that ninety percent of the visits were performed by physicians and ten percent by nurse practitioners, based on our analysis of FY 2009 physician and NP hospice billing data, with 30 seconds time allowed to sign and date the attestation statement, and to write in the name of the patient and the date of the visit, resulting in an estimated total burden to complete the attestation form of 3,811 hours for CY 2011. In the FY 2010 hospice rule (74 FR 39384) we finalized a requirement that the recertifying physician include a brief narrative explanation of the clinical findings which support continued hospice eligibility. Effective January 1, 2011 we propose regulation text changes that this narrative would describe why the clinical findings of the face-to-face encounter, occurring at the 180-day recertification and all subsequent recertifications, continue to support hospice eligibility. However, these proposed regulation changes are for clarification. The narrative requirement finalized in FY 2010 requires that the narrative include why the clinical findings of any physician/NP/patient encounter support continued hospice eligibility. Therefore, the only documentation burden associated with this requirement is the signed and dated attestation that the encounter occurred.

We reiterate that our longstanding policy has been that physicians must sign and date the certification and any recertifications. Therefore, our making this requirement explicit in the regulation poses no additional burden to hospices. We also proposed to clarify the timeframe which the certifications and recertifications cover by requiring physicians to include the dates of the benefit period to which the certification or recertification applies. We believe this is already standard practice at nearly all hospices, but are addressing it in regulation. Using the distribution of lengths of stay from 2007 and 2008 claims data, we estimate that there would be 1,733,663 initial certifications and recertifications during the course of a year. We estimate that it would take a physician 30 seconds at most to include the benefit period dates. We estimate that the time to require physicians to include the benefit period dates on the certification or recertification would be 30 seconds per certification or recertification, for a total burden of 14,447 hours for CY 2011. Table 17 below summarizes the burden estimate associated with these requirements.

TABLE 17. ESTIMATED ANNUAL RECORDKEEPING BURDEN					
OMB#	Requirements	Units	Responses	Hr.Burden	Total
0938-1067	418.22(b)(4)	3,429 hospices	1	0.50	1,714
0938-1067	418.22(b)(4)	457,382 ≥180-day recerts.	1	0.0083333	3,811
0938-1067	418.22(b)(5)	1,733,663 All certs. & recerts.	1	0.0083333	14,447

Details of our burden estimates are available in the PRA package approved under OMB# 0938–1067. We are revising this currently approved package to incorporate these requirements.

E. ICRs Regarding the Home Health Care CAHPS Survey (HHCAHPS)

As part of the DHHS Transparency Initiative on Quality Reporting, CMS is implementing a process to measure and publicly report patients' experiences with home health care they receive from Medicare-certified home health agencies with the Home Health Care CAHPS (HHCAHPS) survey. The HHCAHPS was developed and tested by the Agency for Healthcare Research and Quality (AHRQ) and is part of the family of CAHPS surveys, is a standardized survey for home health patients to assess their home health care providers and the quality of the home health care they received. Prior to the HHCAHPS, there was no national standard for collecting data about home health care patients' perspectives of their home health care.

It is proposed that Section 484.250, Patient Assessment Data, will require an HHA to submit to CMS HHCAHPS data in order for CMS to administer the payment rate methodologies described in §§ 484.215, 484.230, and 484.235. The burden associated with this is the time and effort put forth by the HHA to submit the HHCAHPS data, the patient burden to respond to the survey, and the cost to the HHA to pay the survey vendor to collect the data on their behalf. This burden is currently accounted for under OMB# 0938–1066.

The HHCAHPS survey received OMB clearance on July 18, 2009, and the number is 0938–1066. In that PRA package, we did not state the burden to the HHAs concerning the hours that they would need to secure an approved HHCAHPS vendor and to pay for that vendor. In this proposed rule, we have included the burden directly affecting HHAs, which is the burden to select a survey vendor from *http://www.homehealthcahps.org* and to sign a contract with that survey vendor, that will conduct HHCAHPS on behalf of the HHA. We have determined that this would take 16.0 hours for each HHA. It is noted that 91% of all HHAs (9,890 HHAs of a total of 10,998 HHAs) would be conducting HHCAHPS, since about 9% of HHAs will be exempt from conducting HHCAHPS because they have less than 60 eligible patients in the year. In TABLE 18, we have listed this burden to the HHAs:

TABLE 18. ESTIMATED ANNUAL BURDEN on HHAs for Vendor Selection					
OMB #	Requirements	Units	Responses	Hr. Burden	Total
0938-1066	484.250(c)(2)	9,890	1	16.0	158,240

OMB Number 0938–1066 will be revised to reflect the update concerning burden to the HHAs for vendor services for HHCAHPS.

On February 8, 2006, the Deficit Reduction Act of 2005 (Pub. L. 109–171) (DRA) was enacted. Section 5201 of the DRA requires HHAs to submit data for purposes of measuring health care quality, and links the quality data submission to payment. This requirement is applicable for CY 2007 and each subsequent year. If an HHA does not submit quality data, the home health market basket percentage increase will be reduced 2 percentage points. In accordance with the statute, we published a final rule (71 FR 65884, 65935) in the **Federal Register** on November 9, 2006, to implement the pay-for-reporting requirement of the DRA, codified at 42 CFR 484.225(h) and (i).

In the Home Health Prospective Payment System Rate Update for Calendar Year 2010 (August 13, 2009), we proposed to expand the home health quality measures reporting requirements to include the CAHPS® Home Health Care (HHCAHPS) Survey, as initially discussed in the May 4, 2007, proposed rule (72 FR 25356, 25452) and in the November 3, 2008, Notice (73 FR 65357, 65358). As part of the DHHS Transparency Initiative, we proposed to implement a process to measure and publicly report patient experiences with home health care using a survey developed by AHRQ in its CAHPS® program. In the Final Rule for CY 2010, published on November 10, 2009, we stated our intention to move forward with the HHCAHPS and link the survey to the CY 2012 annual payment update under the DRA "pay-for-reporting" requirement.

As part of this requirement, each HHA sponsoring a HHCAHPS Survey must

prepare and submit to its survey vendor a file containing patient data on patients served the preceding month that will be used by the survey vendor to select the sample and field the survey. This file (essentially the sampling frame) for most home health agencies can be generated from existing databases with minimal effort. For some small HHAs, preparation of a monthly sample frame may require more time. However, data elements needed on the sample frame will be kept at a minimum to reduce the burden on all HHAs.

If you comment on these information collection and recordkeeping requirements, please do either of the following:

1. Submit your comments electronically as specified in the **ADDRESSES** section of this proposed rule; or

2. Submit your comments to the Office of Information and Regulatory Affairs, Office of Management and Budget.

Attention: CMS Desk Officer [CMS–1510–P];

Fax: (202) 395–6974; or

E-mail: *OIRA_submission@omb.eop.gov.*

IV. Regulatory Impact Analysis

A. Overall Impact

We have examined the impacts of this rule as required by Executive Order 12866 on Regulatory Planning and Review (September 30, 1993), the Regulatory Flexibility Act (RFA) (September 19, 1980, Pub. L. 96–354), section 1102(b) of the Social Security Act, section 202 of the Unfunded Mandates Reform Act of 1995 (Pub. L. 104–4), Executive Order 13132 on Federalism (August 4, 1999), and the Congressional Review Act (5 U.S.C. 804(2)).

Executive Order 12866 directs agencies to assess all costs and benefits of available regulatory alternatives and, if regulation is necessary, to select regulatory approaches that maximize net benefits (including potential economic, environmental, public health and safety effects, distributive impacts, and equity). A regulatory impact analysis (RIA) must be prepared for major rules with economically significant effects ($100 million or more in any 1 year). We estimate that this rulemaking is "economically significant" as measured by the $100 million threshold, and hence also a major rule under the Congressional Review Act. Accordingly, we have prepared a Regulatory Impact Analysis that to the best of our ability presents the costs and benefits of the rulemaking.

1. CY 2011 Update

The update set forth in this proposed rule applies to Medicare payments under HH PPS in CY 2011. Accordingly, the following analysis describes the impact in CY 2011 only. We estimate that the net impact of the proposals in this rule is approximately $900 million in CY 2011 savings. The $900 million impact to the proposed CY 2011 HH PPS reflects the distributional effects of an updated wage index ($20 million increase), the 1.4 percent home health market basket update ($270 million increase), the 3.79 percent case-mix adjustment applicable to the national standardized 60-day episode rates and the NRS conversion factor ($700 million decrease), as well as the 2.5 percent returned from the outlier provisions of the Affordable Care Act ($490 million decrease). The $900 million in savings is reflected in the first row of column 3 of Table 15 below as a 4.63 percent decrease in expenditures when comparing the current CY 2010 HH PPS to the proposed CY 2011 HH PPS.

The RFA requires agencies to analyze options for regulatory relief of small businesses, if a rule has a significant impact on a substantial number of small entities. For purposes of the RFA, small entities include small businesses, nonprofit organizations, and small governmental jurisdictions. Most hospitals and most other providers and suppliers are small entities, either by nonprofit status or by having revenues of less than $7.0 million to $34.5 million in any 1 year. The Secretary has determined that this proposed rule would not have a significant economic impact on a substantial number of small entities.

In addition, section 1102(b) of the Act requires us to prepare a regulatory impact analysis if a rule may have a significant impact on the operations of a substantial number of small rural hospitals. This analysis must conform to the provisions of section 603. For purposes of section 1102(b) of the Act, we define a small rural hospital as a hospital that is located outside of a metropolitan statistical area and has fewer than 100 beds. This proposed rule applies to HHAs. Therefore, the Secretary has determined that this proposed rule would not have a significant economic impact on the operations of small rural hospitals.

Section 202 of the Unfunded Mandates Reform Act of 1995 (UMRA) also requires that agencies assess anticipated costs and benefits before issuing any rule whose mandates require spending in any 1 year of $100 million in 1995 dollars, updated annually for inflation. In 2010, that threshold is approximately $135 million. This proposed rule is not anticipated to have an effect on State, local, or Tribal governments in the aggregate, or by the private sector, of $135 million or more.

Executive Order 13132 establishes certain requirements that an agency must meet when it promulgates a proposed rule (and subsequent final rule) that imposes substantial direct requirement costs on State and local governments, preempts State law, or otherwise has Federalism implications. We have reviewed this proposed rule under the threshold criteria of Executive Order 13132, Federalism, and have determined that it would not have substantial direct effects on the rights, roles, and responsibilities of States, local or Tribal governments.

B. Anticipated Effects

This proposed rule sets forth updates to the HH PPS rates contained in the CY 2010 notice published on November 10, 2009. The impact analysis of this proposed rule presents the estimated expenditure effects of policy changes proposed in this rule. We use the latest data and best analysis available, but we do not make adjustments for future changes in such variable as number of visits or case-mix.

This analysis incorporates the latest estimates of growth in service use and payments under the Medicare home health benefit, based on Medicare claims from 2008. We note that certain events may combine to limit the scope or accuracy of our impact analysis, because such an analysis is future-oriented and, thus, susceptible to errors resulting from other changes in the impact time period assessed. Some examples of such possible events are newly-legislated general Medicare program funding changes made by the Congress, or changes specifically related to HHAs. In addition, changes to the Medicare program may continue to be made as a result of the BBA, the BBRA, the Medicare, Medicaid, and SCHIP Benefits Improvement and Protection Act of 2000, the MMA, the DRA, The Affordable Care Act of 2020, or new statutory provision. Although these changes may not be specific to the HH PPS, the nature of the Medicare program is such that the changes may interact, and the complexity of the interaction of these changes could make it difficult to predict accurately the full scope of the impact upon HHAs.

Table 15 below represents how HHA revenues are likely to be affected by the policy changes proposed in this rule. For this analysis, we used linked home

health claims and OASIS assessments; the claims represented a 20-percent sample of 60-day episodes occurring in CY 2008. The first column of Table 15 classifies HHAs according to a number of characteristics including provider type, geographic region, and urban and rural locations. The second column shows the payment effects of the wage index only. The third column shows the payment effects of all the proposed policies outlined earlier in this rule. For CY 2011, the average impact for all HHAs is a .11 percent increase in payments due to the effects of the wage index. The overall impact, for all HHAs, in estimated total payments from CY 2010 to CY 2011, is a decrease of approximately 4.75 percent.

Section 3131(c) of the Affordable Care Act amended section 421(a) of the MMA of 2003. The amended section 421(a) provides an increase of 3 percent of the payment amount otherwise made for home health services furnished in a rural area, with respect to episodes and visits ending on or after April 1, 2010 and before January 1, 2016. Column 3 of Table 19 displays a comparison of estimated payments in CY 2010, including a 3 percent rural add-on for the last three quarters of CY 2010, to estimated payments in CY 2011, including a 3 percent rural add-on for all four quarters of CY 2011.

BILLING CODE 4120–01–P

Table 19--IMPACTS BY AGENCY TYPE		
Group	Comparisons	
	Percent change due to the effects of the updated wage index only	Impact of all CY 2011 Policies[1]
All Agencies	0.11%	-4.63%
Type of Facility		
Free-Standing/Other Vol/NP	-0.12%	-4.80%
Free-Standing/Other Proprietary	0.22%	-4.57%
Free-Standing/Other Government	-0.25%	-4.78%
Facility-Based Vol/NP	-0.09%	-4.76%
Facility-Based Proprietary	0.23%	-4.43%
Facility-Based Government	-0.04%	-4.63%
Subtotal: Freestanding	0.14%	-4.62%
Subtotal: Facility-based	-0.06%	-4.71%
Subtotal: Vol/NP	-0.11%	-4.78%
Subtotal: Proprietary	0.22%	-4.56%
Subtotal: Government	-0.15%	-4.71%
TOTAL	0.11%	-4.63%
Type of Facility (Rural * Only)		
Free-Standing/Other Vol/NP	-0.11%	-4.64%
Free-Standing/Other Proprietary	0.37%	-4.27%
Free-Standing/Other Government	-0.41%	-4.74%
Facility-Based Vol/NP	-0.01%	-4.41%
Facility-Based Proprietary	0.30%	-4.23%
Facility-Based Government	-0.06%	-4.50%
Type of Facility (Urban * Only)		
Free-Standing/Other Vol/NP	-0.12%	-4.81%
Free-Standing/Other Proprietary	0.20%	-4.61%
Free-Standing/Other Government	-0.06%	-4.81%
Facility-Based Vol/NP	-0.12%	-4.83%
Facility-Based Proprietary	0.19%	-4.55%
Facility-Based Government	-0.01%	-4.75%
Type of Facility (Urban* or Rural*)		
Rural	0.16%	-4.38%
Urban	0.10%	-4.67%

Facility Location: Region*		
North	-0.39%	-5.02%
South	0.23%	-4.53%
Midwest	0.07%	-4.71%
West	0.28%	-4.50%
Outlying	0.14%	-4.59%
Facility Location: Area of the Country		
New England	-0.51%	-5.14%
Mid Atlantic	-0.34%	-4.96%
South Atlantic	0.13%	-4.65%
East South Central	-0.28%	-5.00%
West South Central	0.52%	-4.24%
East North Central	0.14%	-4.66%
West North Central	-0.21%	-4.90%
Mountain	-0.26%	-4.93%
Pacific	0.51%	-4.31%
Outlying	0.14%	-4.59%
Facility Size: (Number of First Episodes)		
< 19	0.33%	-4.53%
20 to 49	0.30%	-4.53%
50 to 99	0.29%	-4.50%
100 to 199	0.31%	-4.45%
200 or More	0.02%	-4.70%

Note: Based on a 20% sample of CY 2008 claims linked to OASIS assessments.
*Urban / rural status, for the purposes of these simulations, is based on the wage index on which episode payment is based. The wage index is based on the site of service of the beneficiary.

REGION KEY:
New England=Connecticut, Maine, Massachusetts, New Hampshire, Rhode Island, Vermont; Middle Atlantic=Pennsylvania, New Jersey, New York; South Atlantic=Delaware, District of Columbia, Florida, Georgia, Maryland, North Carolina, South Carolina, Virginia, West Virginia; **East North Central=**Illinois, Indiana, Michigan, Ohio, Wisconsin; East South Central=Alabama, Kentucky, Mississippi, Tennessee; West North Central=Iowa, Kansas, Minnesota, Missouri, Nebraska, North Dakota, South Dakota; West South Central=Arkansas, Louisiana, Oklahoma, Texas; **Mountain=**Arizona, Colorado, Idaho, Montana, Nevada, New Mexico, Utah, Wyoming; **Pacific=**Alaska, California, Hawaii, Oregon, Washington; **Outlying=**Guam, Puerto Rico, Virgin Islands

[1] Percent change due to the effects of the update wage index, the 1.4% home health market basket update, the 3.79% reduction to the national standardized episode rates, the national per-visit rates, the LUPA add-on payment amount, and the NRS conversion factor for nominal increase in case-mix, the 5% decrease in the rates due The Affordable Care Act, the new approximate 2.5% target for outliers as a percentage of total HH PPS payments, a 0.67 FDL ratio, 10% outlier cap, and the 3% rural add-on.

BILLING CODE 4120–01–C

C. Accounting Statement and Table

Whenever a rule is considered a significant rule under Executive Order 12866, we are required to develop an Accounting Statement showing the classification of the expenditures associated with the provisions of this proposed rule.

Table 20 below provides our best estimate of the decrease in Medicare payments under the HH PPS as a result of the changes presented in this proposed rule based on the best available data. The expenditures are classified as a transfer to the Federal Government of $930 million.

Table 20--Accounting Statement: Classification of Estimated Expenditures, From the 21010 HH PPS Calendar Year to the 2011 HH PPS Calendar Year

Category	Transfers
Annualized Monetized Transfers	Negative transfer-Estimated decrease in expenditures: $900 million
From Whom to Whom	Federal Government to HH providers

D. Conclusion

In conclusion, we estimate that the net impact of the proposals in this rule is approximately $900 million in CY 2011 savings. The $900 million impact to the proposed CY 2011 HH PPS reflects the distributional effects of an updated wage index ($20 million increase), the 1.4 percent home health market basket update ($270 million increase), the 3.79 percent case-mix adjustment applicable to the national standardized 60-day episode rates and the NRS conversion factor ($700 million decrease), as well as the 2.5 percent returned from the outlier provisions of The Affordable Care Act ($490 million decrease). This analysis above, together with the remainder of this preamble, provides a Regulatory Impact Analysis.

In accordance with the provisions of Executive Order 12866, this regulation was reviewed by the Office of Management and Budget.

List of Subjects

42 CFR Part 409

Health facilities, Medicare.

42 CFR Part 418

Health facilities, Hospice care, Medicare, Reporting and recordkeeping requirements.

42 CFR Part 424

Emergency medical services, Health facilities, Health professions, Medicare, Reporting and recordkeeping requirements.

42 CFR Part 484

Health facilities, Health professions, Medicare, Reporting and recordkeeping requirements.

42 CFR Part 489

Health facilities, Medicare, Reporting and recordkeeping requirements.

For the reasons set forth in the preamble, the Centers for Medicare & Medicaid Services proposes to amend 42 CFR chapter IV as set forth below:

PART 409—HOSPITAL INSURANCE BENEFITS: GENERAL PROVISIONS

1. The authority citation for part 409 continues to read as follows:

Authority: Secs. 1102 and 1871 of the Social Security Act (42 U.S.C. 1302 and 1395hh).

2. Amend § 409.44 by—

A. Revising paragraph (c)(1).

B. Republishing paragraph (c)(2) introductory text.

C. Revising paragraph (c)(2)(i).

D. Revising paragraph (c)(2)(iii).

E. Revising paragraph (c)(2)(iv).

The revisions read as follows:

§ 409.44 Skilled services requirements.

* * * * *

(c) * * *

(1) Speech-language pathology services and physical or occupational therapy services must relate directly and specifically to a treatment regimen (established by the physician, after any needed consultation with the qualified therapist) that is designed to treat the beneficiary's illness or injury. Services related to activities for the general physical welfare of beneficiaries (for example, exercises to promote overall fitness) do not constitute physical therapy, occupational therapy, or speech-language pathology services for Medicare purposes. To be covered by Medicare, all of the requirements apply as follows:

(i) The patient's plan of care must describe a course of therapy treatment and therapy goals which are consistent with the evaluation of the patient's function, and both must be included in the clinical record.

(ii) The patient's clinical record must include documentation describing how the course of therapy treatment for the patient's illness or injury is in accordance with accepted standards of clinical practice.

(iii) Therapy treatment goals described in the plan of care must be measurable, and must pertain directly to the patient's illness or injury, and the patient's resultant functional impairments.

(iv) The patient's clinical record must demonstrate that the method used to assess a patient's function included objective measurements of function in accordance with accepted standards of clinical practice, enabling comparison of successive measurements to determine progress.

(2) Physical and occupational therapy and speech-language pathology services must be reasonable and necessary. To be considered reasonable and necessary, the following conditions must be met:

(i) The services must be considered under accepted standards of clinical practice to be a specific, safe, and effective treatment for the beneficiary's condition. Each of the following requirements must also be met:

(A) The patient's function must be initially assessed and periodically reassessed by a qualified therapist, using a method which would include objective measurement of function and progress as described in paragraph (c)(1)(iv) of this section. The measurement results and corresponding progress, or lack of progress, must be documented in the clinical record.

(B) If a patient requires 13 or 19 therapy visits, at a minimum, the patient must be functionally reassessed by a qualified therapist on the 13th and 19th therapy visits and at least every 30 days. Subsequent therapy visits will not be covered until:

(*1*) The qualified therapist has completed the reassessment and

objectively measured progress (or lack of progress), towards therapy goals.

(*2*) The qualified therapist has determined if goals have been achieved or require updating.

(*3*) The qualified therapist has documented measurement results and corresponding therapy progress in the clinical record in accordance with paragraph (c)(2)(i)(D) of this section.

(*4*) If the objective measurements of the reassessment do not reveal progress toward goals, the qualified therapist together with the physician have determined whether the therapy is still effective or should be discontinued. If therapy is to be continued in accordance with paragraph (c)(2)(iv)(B)(*1*) of this section, the clinical record must document with a clinically supportable statement why there is an expectation that anticipated improvement is attainable in a reasonable and generally predictable period of time in accordance with paragraph (c)(2)(iii)(A) of this section.

(C) Clinical notes written by therapy assistants may supplement the clinical record, and if included, must include the date written, the signature and job title of the writer, and objective measurements or description of changes in status (if any) relative to each goal being addressed by treatment. Assistants may not make clinical judgments about why progress was or was not made, but must report the progress (or lack thereof) objectively.

(D) Progress documentation by a qualified therapist must include:

(*1*) The therapist's assessment of improvement and extent of progress (or lack thereof) toward each therapy goal;

(*2*) Plans for continuing or discontinuing treatment with reference to evaluation results and or treatment plan revisions;

(*3*) Changes to therapy goals or an updated plan of care that is sent to the physician for signature or discharge;

(*4*) Documentation of objective evidence or a clinically supportable statement of expectation that the patient's condition has the potential to improve or is improving in response to therapy or that maximum improvement is yet to be attained, and there is an expectation that the anticipated improvement is attainable in a reasonable and generally predictable period of time.

* * * * *

(iii) For therapy services to be covered in the home health setting, one of the following three criteria must be met:

(A) There must be an expectation that the beneficiary's condition will improve materially in a reasonable (and generally predictable) period of time based on the physician's assessment of the beneficiary's restoration potential and unique medical condition.

(*1*) Material improvement requires that the clinical record demonstrate that the patient is making functional improvements that are ongoing, as well as of practical value, when measured against his or her condition at the start of treatment.

(*2*) Covered therapy services under the home health benefit shall be rehabilitative therapy service unless they meet the criteria for maintenance therapy in paragraph (c)(2)(iii)(B) or (c)(2)(iii)(C) of this section.

(*3*) Therapy is covered as rehabilitative therapy when the skills of a therapist are necessary to safely and effectively furnish or supervise a recognized therapy service whose goal is improvement of an impairment or functional limitation. Rehabilitative therapy includes recovery or improvement in function and, when possible, restoration to a previous level of health and well being.

(*4*) If an individual's expected rehabilitation potential would be insignificant in relation to the extent and duration of therapy services required to achieve such potential, therapy would not be considered reasonable and necessary, and thus would not be covered as rehabilitative therapy services.

(*5*) Where a patient suffers a transient and easily reversible loss or reduction of function which could reasonably be expected to improve spontaneously as the patient gradually resumes normal activities, therapy would not be considered reasonable and necessary and the services would not be covered.

(B) The specialized skills, knowledge, and judgment of a qualified therapist may be required to design or establish a safe and effective maintenance program required in connection with a specific disease, ensure patient safety, train the patient, family members and/or unskilled personnel, and make periodic reevaluations of the maintenance program.

(*1*) When indicated, the therapist may develop a maintenance program to maintain functional status or to prevent decline in function, during the last visit(s) for rehabilitative therapy.

(*2*) When a patient qualifies for Medicare's home health benefit based on an intermittent skilled nursing need, a qualified therapist may develop a maintenance program to maintain functional status or to prevent decline in function, at any point in the episode.

(*3*) Where the establishment of a maintenance program is initiated after the rehabilitative therapy program has been completed, development of a maintenance program would not be considered reasonable and necessary for the treatment of the patient's condition.

(*4*) If the services are for the establishment of a maintenance program, they must include the design of the program, the instruction of the beneficiary, family, or home health aides, and the necessary periodic reevaluations of the beneficiary and the program to the degree that the specialized knowledge and judgment of a physical therapist, speech-language pathologist, or occupational therapist is required.

(C) The skills of a therapist must be necessary to perform a safe and effective maintenance program required in connection with a specific disease. Where the clinical condition of the patient is such that the services required to maintain function involve the use of complex and sophisticated therapy procedures to be delivered by the therapist himself/herself (and not an assistant) in order to ensure the patient's safety and to provide both a safe and effective maintenance program, then those reasonable and necessary services shall be covered.

(iv) The amount, frequency, and duration of the services must be reasonable and necessary, as determined by a qualified therapist and/or physician, using accepted standards of clinical practice.

(A) Where factors exist that would influence the amount, frequency or duration of therapy services, especially factors that influence the clinical decisions to provide more services than are typical for the patient's condition, those factors must be included in the plan of care and/or functional assessment.

(B) Clinical records must include documentation using objective measures that the patient continues to progress towards goals. If progress cannot be measured, and continued improvement cannot be expected, therapy services cease to be covered except when

(*1*) Therapy progress regresses or plateaus, and the reasons for lack of progress are documented to include justification that continued therapy treatment will lead to resumption of progress toward goals; or

(*2*) Therapy can be considered reasonable and necessary when maintenance therapy is established or provided, as described in paragraph (c)(2)(iii)(B) or (C) of this section.

PART 418—HOSPICE CARE

3. The authority citation for part 418 continues to read as follows:

Authority: Secs. 1102 and 1871 of the Social Security Act (42 U.S.C. 1302 and 1395hh).

4. Amend § 418.22 by—

A. Revising paragraph (a)(3).

B. Adding paragraphs (a)(4), (b)(3)(v), (b)(4), and (b)(5).

The revisions and additions read as follows:

§ 418.22 Certification of terminal illness.

(a) * * *

(3) *Exceptions.* (i) If the hospice cannot obtain the written certification within 2 calendar days, after a period begins, it must obtain an oral certification within 2 calendar days and the written certification before it submits a claim for payment.

(ii) Certifications may be completed no more than 15 calendar days prior to the effective date of election.

(iii) Recertifications may be completed no more than 15 calendar days prior to the start of the subsequent benefit period.

(4) *Face-to-face encounter.* As of January 1, 2011, a hospice physician or hospice nurse practitioner must visit each hospice patient, whose total stay across all hospices is anticipated to reach 180 days, no more than 15 calendar days prior to the 180-day recertification, and must continue to visit that patient no more than 15 calendar days prior to every recertification thereafter, to gather clinical findings to determine continued eligibility for hospice care.

(b) * * *

(3) * * *

(v) The narrative associated with the 180-day recertification and every subsequent recertification must include an explanation of why the clinical findings of the face-to-face encounter support a life expectancy of 6 months or less.

(4) The physician or nurse practitioner who performs the face-to-face encounter with the patient described in paragraph (a)(4) of this section, must attest in writing that he or she had a face-to-face encounter with the patient, including the date of that visit. The attestation of the nurse practitioner shall state that the clinical findings of that visit were provided to the certifying physician, for use in determining whether the patient continues to have a life expectancy of 6 months or less, should the illness run its normal course. The attestation, its accompanying signature, and the date signed, must be a separate and distinct section of, or an addendum to, the recertification form, and must be clearly titled.

(5) All certifications and recertifications must be signed and dated by the physician(s), and must include the benefit period dates to which the certification or recertification applies.

* * * * *

PART 424—CONDITIONS FOR MEDICARE PAYMENT

5. The authority citation for part 424 continues to read as follows:

Authority: Secs. 1102 and 1871 of the Social Security Act (42 U.S.C. 1302 and 1395hh).

6. Amend § 424.22 by—

A. Adding paragraph (a)(1)(v).

B. Revising paragraph (a)(2).

C. Revising paragraph (b)(1) introductory text.

D. Revising paragraph (d).

The revisions and additions read as follows:

§ 424.22 Requirements for home health services.

* * * * *

(a) * * *

(1) * * *

(v) The physician responsible for performing the initial certification must document that the face-to-face patient encounter, which is related to the primary reason the patient requires home health services, has occurred no more than thirty days prior to the home health start of care date or within two weeks of the start of the home health care by including the date of the encounter, and including an explanation of why the clinical findings of such encounter support that the patient is homebound and in need of either intermittent skilled nursing services or therapy services as defined in § 409.42(a) and (c) respectively. The physician's documentation of the face-to-face encounter in his/her practice's medical recordkeeping for that patient must be consistent with, and supportive of, the required documentation of the face-to-face encounter as part of the certification. Pursuant to sections 1814(a)(2)(C) and 1835(a)(2)(A) of the Act, the face-to-face encounter must be performed by the certifying physician himself or herself or by a nurse practitioner, a clinical nurse specialist (as those terms are defined in section 1861(aa)(5) of the Act) who is working in collaboration with the physician in accordance with State law, a certified nurse midwife (as defined in section 1861(gg)of the Act) as authorized by State law, or a physician assistant (as defined in section 1861(aa)(5) of the Act) under the supervision of the physician. The documentation of the face-to-face patient encounter must be a separate and distinct section of, or an addendum to, the certification, and must be clearly titled, dated and signed by the certifying physician.

(A) The non-physician practitioner performing the face-to-face encounter must document the clinical findings of that face-to-face patient encounter and communicate those findings to the certifying physician.

(B) If a face-to-face patient encounter occurred within 30 days of the start of care but is not related to the primary reason the patient requires home health services, or the patient has not seen the certifying physician or allowed non-physician practitioner within the 30 days prior to the start of the home health episode, the certifying physician or non-physician practitioner must have a face to face encounter with the patient within two weeks of the start of the home health care.

(C) The face-to-face patient encounter may occur through telehealth, in compliance with Section 1834(m) of the *Act* and subject to the list of payable Medicare telehealth services established by the applicable physician fee schedule regulation.

(D) To assure clinical correlation between the face-to-face patient encounter and the associated home health episode of care, the physician responsible for certifying the patient for home care must document the face-to-face encounter on the certification itself, or as an addendum to the certification (as described in paragraph (a)(1)(v) of this section), that the condition for which the patient was being treated in the face-to-face patient encounter is related to the primary reason the patient requires home health services, and why the clinical findings of such encounter support that the patient is homebound and in need of either intermittent skilled nursing services or therapy services as defined in § 409.42(a) and (c) of this chapter respectively. The documentation must be clearly titled, dated and signed by the certifying physician.

(2) *Timing & signature.* The certification of need for home health services must be obtained at the time the plan of care is established or as soon thereafter as possible and must be signed and dated by the physician who establishes the plan.

(b) * * *

(1) *Timing and signature of recertification.* Recertification is required at least every 60 days, preferably at the time the plan is reviewed, and must be signed and dated by the physician who reviews the plan

of care. The recertification is required at least every 60 days when there is a—

* * * * *

(d) *Limitation of the performance of physician certification and plan of care functions.* The need for home health services to be provided by an HHA may not be certified or recertified, and a plan of care may not be established and reviewed, by any physician who has a financial relationship as defined in § 411.354 of this chapter, with that HHA, unless the physician's relationship meets one of the exceptions in section 1877 of the Act, which sets forth general exceptions to the referral prohibition related to both ownership/investment and compensation; exceptions to the referral prohibition related to ownership or investment interests; and exceptions to the referral prohibition related to compensation arrangements. Non-physician practitioners would be precluded from performing a face-to-face encounter for the purpose of informing the certifying physician, as described in sections 1814 and 1835 of the Act, if the non-physician practitioner is an employee of the HHA, as defined by Section 210(j) of the Act.

7. Amend § 424.502 by adding the definition of "Change in majority ownership" to read as follows:

§ 424.502 Definitions.

* * * * *

Change in majority ownership occurs when an individual or organization acquires more than 50 percent interest in an HHA during the 36 following the initial enrollment into the Medicare program or a change of ownership (including asset sale, stock transfer, merger, or consolidation). This includes an individual or organization that acquires majority ownership in an HHA through the cumulative effect of asset sales, stock transfers, consolidations, mergers during a 36 month period.

* * * * *

8. Section 424.510 is amended by adding paragraph (d)(9) to read as follows:

§ 424.510 Requirements for enrolling in the Medicare program.

* * * * *

(d) * * *

(9) In order to obtain enrollment and to maintain enrollment for the first three months after Medicare billing privileges are conveyed, a home health provider must satisfy the home health "initial reserve operating funds" requirement as set forth in § 489.28 of this chapter.

* * * * *

9. Section 424.530 is amended by adding paragraph (a)(8) to read as follows:

§ 424.530 Denial of enrollment in the Medicare program.

(a) * * *

(8) *Initial reserve operating funds.* (i) CMS or its designated Medicare contractor may deny Medicare billing privileges if within 30 days of a CMS or Medicare contractor request, a home health agency cannot furnish supporting documentation which verifies that the HHA meets the initial reserve operating funds requirement found in 42 CFR 489.28(a).

(ii) CMS may deny Medicare billing privileges upon an HHA applicant's failure to satisfy the initial reserve operating funds requirement found in 42 CFR 489.28(a)

* * * * *

10. Section 424.535 is amended by adding paragraph (a)(11) to read as follows:

§ 424.535 Revocation of enrollment and billing privileges in the Medicare program.

(a) * * *

(11) *Initial reserve operating funds.* CMS or its designated Medicare contractor may revoke the Medicare billing privileges of a home health agency (HHA) and the corresponding provider agreement if within 30 days of a CMS or Medicare contractor request, the HHA cannot furnish supporting documentation verifying that the HHA meets the initial reserve operating funds requirement found in 42 CFR 489.28(a).

* * * * *

11. Section 424.550 is amended by adding paragraphs (b)(1) and (b)(2) to read as follows:

§ 424.550 Prohibitions on the sale or transfer of billing privileges.

(b) * * *

(1) Unless an exception in paragraph (b)(2) of this section applies, if there is a change in majority ownership of a home health agency by sale (including asset sales, stock transfers, mergers, consolidations) within 36 months after the effective date of the HHA's enrollment in Medicare, the provider agreement and Medicare billing privileges do not convey to the new owner. The prospective provider/owner of the HHA must instead:

(i) Enroll in the Medicare program as a new HHA under the provisions of § 424.510.

(ii) Obtain a State survey or an accreditation from an approved accreditation organization.

(2)(i) A publicly-traded company is acquiring another HHA and both entities have submitted cost reports to Medicare for the previous five (5) years.

(ii) An HHA's parent company is undergoing an internal corporate restructuring, such as a merger or consolidation, and the HHA has submitted a cost report to Medicare for the previous five (5) years.

(iii) The owners of an existing HHA decide to change the existing business structure (for example, partnership to a limited liability corporation or sole proprietorship to subchapter S corporation), the individual owners remain the same, and there is no change in majority ownership.

(iv) The death of an owner who owns 49 percent or less interest in an HHA (where several individuals and/or organizations are co-owners of an HHA and one of the owners dies).

* * * * *

PART 484—HOME HEALTH SERVICES

12. The authority citation for part 484 continues to read as follows:

Authority: Secs. 1102 and 1871 of the Social Security Act (42 U.S.C. 1302 and 1395(hh)).

Subpart E—Prospective Payment System for HHAs

13. Revise § 484.250 to read as follows:

§ 484.250 Patient assessment data.

(a) An HHA must submit to CMS the OASIS–C data described at § 484.55 (b)(1) and Home Health Care CAHPS data in order for CMS to administer the payment rate methodologies described in §§ 484.215, 484.230, and 484.235, and meet the quality reporting requirements of section 1895(b)(3)(B)(v) of the Act.

(b) An HHA that has less than 60 eligible unique HHCAHPS patients annually must submit to CMS their total HHCAHPS patient count to CMS in order to be exempt from the HHCAHPS reporting requirements.

(c) An HHA must contract with an approved, independent HHCAHPS survey vendor to administer the HHCAHPS on its behalf.

(1) CMS approves an HHCAHPS survey vendor if such applicant has been in business for a minimum of three years and has conducted surveys of individuals and samples for at least two years. For HHCAHPS, a "survey of individuals" is defined as the collection of data from at least 600 individuals selected by statistical sampling methods and the data collected are used for statistical purposes. All applicants that meet these requirements will be approved by CMS.

(2) No organization, firm, or business that owns, operates, or provides staffing for a HHA is permitted to administer its own Home Health Care CAHPS (HHCAHPS) Survey or administer the survey on behalf of any other HHA in the capacity as an HHCAHPS survey vendor. Such organizations will not be approved by CMS as HHCAHPS survey vendors.

PART 489—PROVIDER AGREEMENTS AND SUPPLIER APPROVAL

14. The authority citation for part 489 continues to read as follows:

Authority: Secs. 1102, 1819, 1820(e), 1861, 1864(m), 1866, 1869, and 1871 of the Social Security Act (42 U.S.C. 1302, 1395i–3, 1395x, 1395aa(m), 1395cc, 1395ff, and 1395hh).

15. Amend § 489.28 by—

A. Revising paragraph (a).

B. Adding paragraph (c)(1).

B. Adding and reserving paragraph (c)(2).

C. Revising paragraph (g).

The addition and revisions read as follows:

§ 489.28 Special capitalization requirements for HHAs.

(a) *Basic rule.* An HHA entering the Medicare program on or after January 1, 1998, including a new HHA as a result of a change of ownership, if the change of ownership results in a new provider number being issued, must have available sufficient funds, which we term "initial reserve operating funds," at the time of application submission and at all times during the enrollment process to operate the HHA for the three month period after Medicare billing privileges are conveyed by the Medicare contractor, exclusive of actual or projected accounts receivable from Medicare.

* * * * *

(c) * * *

(1) In selecting the comparative HHAs as described in this paragraph (c), the CMS contractor shall only select HHAs that have provided cost reports to Medicare.

(2)[Reserved]

* * * * *

(g) *Billing privileges.* (1) CMS may deny Medicare billing privileges to an HHA unless the HHA meets the initial reserve operating funds requirement of this section.

(2) CMS may revoke the Medicare billing privileges of an HHA that fails to meet the initial reserve operations funds requirements of this section within three months of receiving its billing privileges.

(Catalog of Federal Domestic Assistance Program No. 93.773, Medicare—Hospital Insurance; and Program No. 93.774, Medicare—Supplementary Medical Insurance Program)

Dated: May 18, 2010.

Marilyn Tavenner,

Acting Administrator and Chief Operating Officer, Centers for Medicare & Medicaid Services.

Approved: July 14, 2010.

Kathleen Sebelius,

Secretary.

Note: The following addenda will not be published in the Code of Federal Regulations.

BILLING CODE 4120–01–P

ADDENDUM A. CY 2011 WAGE INDEX FOR RURAL AREAS BY CBSA; APPLICABLE PRE-FLOOR AND PRE-RECLASSIFIED HOSPITAL WAGE INDEX

CBSA Code	Nonurban Area	Wage Index
01	Alabama	0.7376
02	Alaska	1.2646
03	Arizona	0.9094
04	Arkansas	0.7234
05	California	1.2456
06	Colorado	0.9949
07	Connecticut	1.1139
08	Delaware	0.9771
10	Florida	0.8422
11	Georgia	0.7567
12	Hawaii	1.1100
13	Idaho	0.7568
14	Illinois	0.8357
15	Indiana	0.8404
16	Iowa	0.8584
17	Kansas	0.7994
18	Kentucky	0.7827
19	Louisiana	0.7724
20	Maine	0.8602
21	Maryland	0.9189
22	Massachusetts[1]	1.1788
23	Michigan	0.8569
24	Minnesota	0.9053
25	Mississippi	0.7647
26	Missouri	0.7648
27	Montana	0.8531
28	Nebraska	0.8920
29	Nevada	0.9365
30	New Hampshire	0.9894
31	New Jersey[1]	------
32	New Mexico	0.8948
33	New York	0.8198
34	North Carolina	0.8379
35	North Dakota	0.6842
36	Ohio	0.8542
37	Oklahoma	0.7867
38	Oregon	1.0045
39	Pennsylvania	0.8482
40	Puerto Rico[1]	0.4047
41	Rhode Island[1]	------
42	South Carolina	0.8431
43	South Dakota	0.8549
44	Tennessee	0.7879
45	Texas	0.7818
46	Utah	0.8663
47	Vermont	0.9606
48	Virgin Islands	0.7416
49	Virginia	0.7853

1 All counties within the State are classified as urban, with the exception of Massachusetts and Puerto Rico. Massachusetts and Puerto Rico have areas designated as rural, however, no short-term, acute care hospitals are located in the area(s) for CY 2011

CBSA Code	Nonurban Area	Wage Index
50	Washington	1.0200
51	West Virginia	0.7484
52	Wisconsin	0.8976
53	Wyoming	0.9544
65	Guam	0.9611

ADDENDUM B.- CY 2011 WAGE INDEX FOR URBAN AREAS BY CBSA; APPLICABLE PRE-FLOOR AND PRE-RECLASSIFIED HOSPITAL WAGE INDEX

CBSA Code	Urban Area (Constituent Counties)	Wage Index
10180	Abilene, TX Callahan County, TX Jones County, TX Taylor County, TX	0.8016
10380	Aguadilla-Isabela-San Sebastián, PR Aguada Municipio, PR Aguadilla Municipio, PR Añasco Municipio, PR Isabela Municipio, PR Lares Municipio, PR Moca Municipio, PR Rincón Municipio, PR San Sebastián Municipio, PR	0.3476
10420	Akron, OH Portage County, OH Summit County, OH	0.8857
10500	Albany, GA Baker County, GA Dougherty County, GA Lee County, GA Terrell County, GA Worth County, GA	0.9050
10580	Albany-Schenectady-Troy, NY Albany County, NY Rensselaer County, NY Saratoga County, NY Schenectady County, NY Schoharie County, NY	0.8667
10740	Albuquerque, NM Bernalillo County, NM Sandoval County, NM Torrance County, NM Valencia County, NM	0.9454
10780	Alexandria, LA Grant Parish, LA Rapides Parish, LA	0.8008
10900	Allentown-Bethlehem-Easton, PA-NJ Warren County, NJ Carbon County, PA Lehigh County, PA Northampton County, PA	0.9178
11020	Altoona, PA Blair County, PA	0.8634
11100	Amarillo, TX Armstrong County, TX Carson County, TX Potter County, TX Randall County, TX	0.8658
11180	Ames, IA Story County, IA	0.9986
11260	Anchorage, AK Anchorage Municipality, AK Matanuska-Susitna Borough, AK	1.1984
11300	Anderson, IN Madison County, IN	0.9207

CBSA Code	Urban Area (Constituent Counties)	Wage Index
11340[2]	Anderson, SC Anderson County, SC	0.8969
11460	Ann Arbor, MI Washtenaw County, MI	1.0140
11500	Anniston-Oxford, AL Calhoun County, AL	0.7931
11540	Appleton, WI Calumet County, WI Outagamie County, WI	0.9376
11700	Asheville, NC Buncombe County, NC Haywood County, NC Henderson County, NC Madison County, NC	0.9016
12020	Athens-Clarke County, GA Clarke County, GA Madison County, GA Oconee County, GA Oglethorpe County, GA	0.9546
12060	Atlanta-Sandy Springs-Marietta, GA Barrow County, GA Bartow County, GA Butts County, GA Carroll County, GA Cherokee County, GA Clayton County, GA Cobb County, GA Coweta County, GA Dawson County, GA DeKalb County, GA Douglas County, GA Fayette County, GA Forsyth County, GA Fulton County, GA Gwinnett County, GA Haralson County, GA Heard County, GA Henry County, GA Jasper County, GA Lamar County, GA Meriwether County, GA Newton County, GA Paulding County, GA Pickens County, GA Pike County, GA Rockdale County, GA Spalding County, GA Walton County, GA	0.9566
12100	Atlantic City-Hammonton, NJ Atlantic County, NJ	1.1147
12220	Auburn-Opelika, AL Lee County, AL	0.7255

CBSA Code	Urban Area (Constituent Counties)	Wage Index
12260	Augusta-Richmond County, GA-SC Burke County, GA Columbia County, GA McDuffie County, GA Richmond County, GA Aiken County, SC Edgefield County, SC	0.9522
12420	Austin-Round Rock-San Marcos, TX Bastrop County, TX Caldwell County, TX Hays County, TX Travis County, TX Williamson County, TX	0.9529
12540	Bakersfield-Delano, CA Kern County, CA	1.1655
12580	Baltimore-Towson, MD Anne Arundel County, MD Baltimore County, MD Carroll County, MD Harford County, MD Howard County, MD Queen Anne's County, MD Baltimore City, MD	1.0267
12620	Bangor, ME Penobscot County, ME	0.9793
12700	Barnstable Town, MA Barnstable County, MA	1.2844
12940	Baton Rouge, LA Ascension Parish, LA East Baton Rouge Parish, LA East Feliciana Parish, LA Iberville Parish, LA Livingston Parish, LA Pointe Coupee Parish, LA St. Helena Parish, LA West Baton Rouge Parish, LA West Feliciana Parish, LA	0.8597
12980	Battle Creek, MI Calhoun County, MI	0.9671
13020	Bay City, MI Bay County, MI	0.9235
13140	Beaumont-Port Arthur, TX Hardin County, TX Jefferson County, TX Orange County, TX	0.8502
13380	Bellingham, WA Whatcom County, WA	1.1408
13460	Bend, OR Deschutes County, OR	1.1388
13644	Bethesda-Rockville-Frederick, MD Frederick County, MD Montgomery County, MD	1.0542
13740	Billings, MT Carbon County, MT Yellowstone County, MT	0.8688
13780	Binghamton, NY Broome County, NY Tioga County, NY	0.8733
13820	Birmingham-Hoover, AL Bibb County, AL Blount County, AL Chilton County, AL Jefferson County, AL St. Clair County, AL Shelby County, AL Walker County, AL	0.8616
13900	Bismarck, ND Burleigh County, ND Morton County, ND	0.7360
13980	Blacksburg-Christiansburg-Radford, VA Giles County, VA Montgomery County, VA Pulaski County, VA Radford City, VA	0.8328
14020	Bloomington, IN Greene County, IN Monroe County, IN Owen County, IN	0.9004

CBSA Code	Urban Area (Constituent Counties)	Wage Index
14060	Bloomington-Normal, IL McLean County, IL	0.9455
14260	Boise City-Nampa, ID Ada County, ID Boise County, ID Canyon County, ID Gem County, ID Owyhee County, ID	0.9288
14484	Boston-Quincy, MA Norfolk County, MA Plymouth County, MA Suffolk County, MA	1.2215
14500	Boulder, CO Boulder County, CO	1.0081
14540	Bowling Green, KY Edmonson County, KY Warren County, KY	0.8680
14740	Bremerton-Silverdale, WA Kitsap County, WA	1.0684
14860	Bridgeport-Stamford-Norwalk, CT Fairfield County, CT	1.2567
15180	Brownsville-Harlingen, TX Cameron County, TX	0.9188
15260	Brunswick, GA Brantley County, GA Glynn County, GA McIntosh County, GA	0.9224
15380	Buffalo-Niagara Falls, NY Erie County, NY Niagara County, NY	0.9545
15500	Burlington, NC Alamance County, NC	0.8878
15540	Burlington-South Burlington, VT Chittenden County, VT Franklin County, VT Grand Isle County, VT	0.9963
15764	Cambridge-Newton-Framingham, MA Middlesex County, MA	1.1268
15804	Camden, NJ Burlington County, NJ Camden County, NJ Gloucester County, NJ	1.0403
15940	Canton-Massillon, OH Carroll County, OH Stark County, OH	0.8761
15980	Cape Coral-Fort Myers, FL Lee County, FL	0.9191
16020	Cape Girardeau-Jackson, MO-IL Alexander County, IL Bollinger County, MO Cape Girardeau County, MO	0.8905
16180	Carson City, NV Carson City, NV	1.0482
16220	Casper, WY Natrona County, WY	0.9670
16300	Cedar Rapids, IA Benton County, IA Jones County, IA Linn County, IA	0.8858
16580	Champaign-Urbana, IL Champaign County, IL Ford County, IL Piatt County, IL	1.0251
16620	Charleston, WV Boone County, WV Clay County, WV Kanawha County, WV Lincoln County, WV Putnam County, WV	0.7908
16700	Charleston-North Charleston-Summerville, SC Berkeley County, SC Charleston County, SC Dorchester County, SC	0.9345

CBSA Code	Urban Area (Constituent Counties)	Wage Index
16740	Charlotte-Gastonia-Rock Hill, NC-SC Anson County, NC Cabarrus County, NC Gaston County, NC Mecklenburg County, NC Union County, NC York County, SC	0.9435
16820	Charlottesville, VA Albemarle County, VA Fluvanna County, VA Greene County, VA Nelson County, VA Charlottesville City, VA	0.9358
16860	Chattanooga, TN-GA Catoosa County, GA Dade County, GA Walker County, GA Hamilton County, TN Marion County, TN Sequatchie County, TN	0.8755
16940	Cheyenne, WY Laramie County, WY	0.9408
16974	Chicago-Joliet-Naperville, IL Cook County, IL DeKalb County, IL DuPage County, IL Grundy County, IL Kane County, IL Kendall County, IL McHenry County, IL Will County, IL	1.0573
17020	Chico, CA Butte County, CA	1.1572
17140	Cincinnati-Middletown, OH-KY-IN Dearborn County, IN Franklin County, IN Ohio County, IN Boone County, KY Bracken County, KY Campbell County, KY Gallatin County, KY Grant County, KY Kenton County, KY Pendleton County, KY Brown County, OH Butler County, OH Clermont County, OH Hamilton County, OH Warren County, OH	0.9714
17300	Clarksville, TN-KY Christian County, KY Trigg County, KY Montgomery County, TN Stewart County, TN	0.7898
17420	Cleveland, TN Bradley County, TN Polk County, TN	0.7744
17460	Cleveland-Elyria-Mentor, OH Cuyahoga County, OH Geauga County, OH Lake County, OH Lorain County, OH Medina County, OH	0.9052
17660	Coeur d'Alene, ID Kootenai County, ID	0.9379
17780	College Station-Bryan, TX Brazos County, TX Burleson County, TX Robertson County, TX	0.9604
17820	Colorado Springs, CO El Paso County, CO Teller County, CO	0.9497

CBSA Code	Urban Area (Constituent Counties)	Wage Index
17860	Columbia, MO Boone County, MO Howard County, MO	0.8295
17900	Columbia, SC Calhoun County, SC Fairfield County, SC Kershaw County, SC Lexington County, SC Richland County, SC Saluda County, SC	0.8721
17980	Columbus, GA-AL Russell County, AL Chattahoochee County, GA Harris County, GA Marion County, GA Muscogee County, GA	0.9042
18020	Columbus, IN Bartholomew County, IN	0.9449
18140	Columbus, OH Delaware County, OH Fairfield County, OH Franklin County, OH Licking County, OH Madison County, OH Morrow County, OH Pickaway County, OH Union County, OH	1.0157
18580	Corpus Christi, TX Aransas County, TX Nueces County, TX San Patricio County, TX	0.8599
18700	Corvallis, OR Benton County, OR	1.0472
18880	Crestview-Fort Walton Beach-Destin, FL Okaloosa County, FL	0.8856
19060	Cumberland, MD-WV Allegany County, MD Mineral County, WV	0.8199

CBSA Code	Urban Area (Constituent Counties)	Wage Index
19124	Dallas-Plano-Irving, TX Collin County, TX Dallas County, TX Delta County, TX Denton County, TX Ellis County, TX Hunt County, TX Kaufman County, TX Rockwall County, TX	0.9848
19140	Dalton, GA Murray County, GA Whitfield County, GA	0.8610
19180	Danville, IL Vermilion County, IL	0.9708
19260	Danville, VA Pittsylvania County, VA Danville City, VA	0.8182
19340	Davenport-Moline-Rock Island, IA-IL Henry County, IL Mercer County, IL Rock Island County, IL Scott County, IA	0.8414
19380	Dayton, OH Greene County, OH Miami County, OH Montgomery County, OH Preble County, OH	0.9155
19460	Decatur, AL Lawrence County, AL Morgan County, AL	0.7618
19500	Decatur, IL Macon County, IL	0.7929
19660	Deltona-Daytona Beach-Ormond Beach, FL Volusia County, FL	0.8750

CBSA Code	Urban Area (Constituent Counties)	Wage Index
19740	Denver-Aurora-Broomfield, CO Adams County, CO Arapahoe County, CO Broomfield County, CO Clear Creek County, CO Denver County, CO Douglas County, CO Elbert County, CO Gilpin County, CO Jefferson County, CO Park County, CO	1.0735
19780	Des Moines-West Des Moines, IA Dallas County, IA Guthrie County, IA Madison County, IA Polk County, IA Warren County, IA	0.9637
19804	Detroit-Livonia-Dearborn, MI Wayne County, MI	0.9702
20020	Dothan, AL Geneva County, AL Henry County, AL Houston County, AL	0.7635
20100	Dover, DE Kent County, DE	0.9937
20220	Dubuque, IA Dubuque County, IA	0.8788
20260	Duluth, MN-WI Carlton County, MN St. Louis County, MN Douglas County, WI	1.0469
20500	Durham-Chapel Hill, NC Chatham County, NC Durham County, NC Orange County, NC Person County, NC	0.9680
20740	Eau Claire, WI Chippewa County, WI Eau Claire County, WI	0.9655
20764	Edison-New Brunswick, NJ Middlesex County, NJ Monmouth County, NJ Ocean County, NJ Somerset County, NJ	1.1022
20940	El Centro, CA Imperial County, CA	0.9273
21060	Elizabethtown, KY Hardin County, KY Larue County, KY	0.8463
21140	Elkhart-Goshen, IN Elkhart County, IN	0.9480
21300	Elmira, NY Chemung County, NY	0.8459
21340	El Paso, TX El Paso County, TX	0.8489
21500	Erie, PA Erie County, PA	0.8371
21660	Eugene-Springfield, OR Lane County, OR	1.1402
21780	Evansville, IN-KY Gibson County, IN Posey County, IN Vanderburgh County, IN Warrick County, IN Henderson County, KY Webster County, KY	0.8446
21820	Fairbanks, AK Fairbanks North Star Borough, AK	1.1098
21940	Fajardo, PR Ceiba Municipio, PR Fajardo Municipio, PR Luquillo Municipio, PR	0.3889
22020	Fargo, ND-MN Clay County, MN Cass County, ND	0.8049
22140	Farmington, NM San Juan County, NM	0.8000

CBSA Code	Urban Area (Constituent Counties)	Wage Index
22180	Fayetteville, NC Cumberland County, NC Hoke County, NC	0.9339
22220	Fayetteville-Springdale-Rogers, AR-MO Benton County, AR Madison County, AR Washington County, AR McDonald County, MO	0.8630
22380	Flagstaff, AZ Coconino County, AZ	1.2463
22420	Flint, MI Genesee County, MI	1.1515
22500	Florence, SC Darlington County, SC Florence County, SC	0.8264
22520	Florence-Muscle Shoals, AL Colbert County, AL Lauderdale County, AL	0.8058
22540	Fond du Lac, WI Fond du Lac County, WI	0.9238
22660	Fort Collins-Loveland, CO Larimer County, CO	0.9908
22744	Fort Lauderdale-Pompano Beach-Deerfield Beach, FL Broward County, FL	1.0170
22900	Fort Smith, AR-OK Crawford County, AR Franklin County, AR Sebastian County, AR Le Flore County, OK Sequoyah County, OK	0.7601
23060	Fort Wayne, IN Allen County, IN Wells County, IN Whitley County, IN	0.9322
23104	Fort Worth-Arlington, TX Johnson County, TX Parker County, TX Tarrant County, TX Wise County, TX	0.9490

CBSA Code	Urban Area (Constituent Counties)	Wage Index
23420	Fresno, CA Fresno County, CA	1.1439
23460	Gadsden, AL Etowah County, AL	0.7028
23540	Gainesville, FL Alachua County, FL Gilchrist County, FL	0.9175
23580	Gainesville, GA Hall County, GA	0.9386
23844	Gary, IN Jasper County, IN Lake County, IN Newton County, IN Porter County, IN	0.9099
24020	Glens Falls, NY Warren County, NY Washington County, NY	0.8521
24140	Goldsboro, NC Wayne County, NC	0.9081
24220	Grand Forks, ND-MN Polk County, MN Grand Forks County, ND	0.7729
24300	Grand Junction, CO Mesa County, CO	0.9866
24340	Grand Rapids-Wyoming, MI Barry County, MI Ionia County, MI Kent County, MI Newaygo County, MI	0.9183
24500	Great Falls, MT Cascade County, MT	0.8303
24540	Greeley, CO Weld County, CO	0.9511
24580	Green Bay, WI Brown County, WI Kewaunee County, WI Oconto County, WI	0.9601

CBSA Code	Urban Area (Constituent Counties)	Wage Index
24660	Greensboro-High Point, NC Guilford County, NC Randolph County, NC Rockingham County, NC	0.8897
24780	Greenville, NC Greene County, NC Pitt County, NC	0.9385
24860	Greenville-Mauldin-Easley, SC Greenville County, SC Laurens County, SC Pickens County, SC	0.9563
25020	Guayama, PR Arroyo Municipio, PR Guayama Municipio, PR Patillas Municipio, PR	0.3692
25060	Gulfport-Biloxi, MS Hancock County, MS Harrison County, MS Stone County, MS	0.8990
25180	Hagerstown-Martinsburg, MD-WV Washington County, MD Berkeley County, WV Morgan County, WV	0.9269
25260	Hanford-Corcoran, CA Kings County, CA	1.1223
25420	Harrisburg-Carlisle, PA Cumberland County, PA Dauphin County, PA Perry County, PA	0.9311
25500	Harrisonburg, VA Rockingham County, VA Harrisonburg City, VA	0.9173
25540	Hartford-West Hartford-East Hartford, CT Hartford County, CT Middlesex County, CT Tolland County, CT	1.0936
25620	Hattiesburg, MS Forrest County, MS Lamar County, MS Perry County, MS	0.7727

CBSA Code	Urban Area (Constituent Counties)	Wage Index
25860	Hickory-Lenoir-Morganton, NC Alexander County, NC Burke County, NC Caldwell County, NC Catawba County, NC	0.8707
25980[2]	Hinesville-Fort Stewart, GA Liberty County, GA Long County, GA	0.8955
26100	Holland-Grand Haven, MI Ottawa County, MI	0.8646
26180	Honolulu, HI Honolulu County, HI	1.1801
26300	Hot Springs, AR Garland County, AR	0.9166
26380	Houma-Bayou Cane-Thibodaux, LA Lafourche Parish, LA Terrebonne Parish, LA	0.7865
26420	Houston-Sugar Land-Baytown, TX Austin County, TX Brazoria County, TX Chambers County, TX Fort Bend County, TX Galveston County, TX Harris County, TX Liberty County, TX Montgomery County, TX San Jacinto County, TX Waller County, TX	0.9838
26580	Huntington-Ashland, WV-KY-OH Boyd County, KY Greenup County, KY Lawrence County, OH Cabell County, WV Wayne County, WV	0.8967
26620	Huntsville, AL Limestone County, AL Madison County, AL	0.9130
26820	Idaho Falls, ID Bonneville County, ID Jefferson County, ID	0.9678

CBSA Code	Urban Area (Constituent Counties)	Wage Index
26900	Indianapolis-Carmel, IN Boone County, IN Brown County, IN Hamilton County, IN Hancock County, IN Hendricks County, IN Johnson County, IN Marion County, IN Morgan County, IN Putnam County, IN Shelby County, IN	0.9687
26980	Iowa City, IA Johnson County, IA Washington County, IA	0.9672
27060	Ithaca, NY Tompkins County, NY	0.9858
27100	Jackson, MI Jackson County, MI	0.9170
27140	Jackson, MS Copiah County, MS Hinds County, MS Madison County, MS Rankin County, MS Simpson County, MS	0.8105
27180	Jackson, TN Chester County, TN Madison County, TN	0.8418
27260	Jacksonville, FL Baker County, FL Clay County, FL Duval County, FL Nassau County, FL St. Johns County, FL	0.8899
27340	Jacksonville, NC Onslow County, NC	0.7819
27500	Janesville, WI Rock County, WI	0.9430
27620	Jefferson City, MO Callaway County, MO Cole County, MO Moniteau County, MO Osage County, MO	0.8448
27740	Johnson City, TN Carter County, TN Unicoi County, TN Washington County, TN	0.7269
27780	Johnstown, PA Cambria County, PA	0.8103
27860	Jonesboro, AR Craighead County, AR Poinsett County, AR	0.7770
27900	Joplin, MO Jasper County, MO Newton County, MO	0.8227
28020	Kalamazoo-Portage, MI Kalamazoo County, MI Van Buren County, MI	1.0309
28100	Kankakee-Bradley, IL Kankakee County, IL	1.0636

CBSA Code	Urban Area (Constituent Counties)	Wage Index
28140	Kansas City, MO-KS Franklin County, KS Johnson County, KS Leavenworth County, KS Linn County, KS Miami County, KS Wyandotte County, KS Bates County, MO Caldwell County, MO Cass County, MO Clay County, MO Clinton County, MO Jackson County, MO Lafayette County, MO Platte County, MO Ray County, MO	0.9667
28420	Kennewick-Pasco-Richland, WA Benton County, WA Franklin County, WA	0.9992
28660	Killeen-Temple-Fort Hood, TX Bell County, TX Coryell County, TX Lampasas County, TX	0.8711
28700	Kingsport-Bristol-Bristol, TN-VA Hawkins County, TN Sullivan County, TN Bristol City, VA Scott County, VA Washington County, VA	0.7596
28740	Kingston, NY Ulster County, NY	0.9089
28940	Knoxville, TN Anderson County, TN Blount County, TN Knox County, TN Loudon County, TN Union County, TN	0.7856
29020	Kokomo, IN Howard County, IN Tipton County, IN	0.9134
29100	La Crosse, WI-MN Houston County, MN La Crosse County, WI	0.9819
29140	Lafayette, IN Benton County, IN Carroll County, IN Tippecanoe County, IN	0.9304
29180	Lafayette, LA Lafayette Parish, LA St. Martin Parish, LA	0.8499
29340	Lake Charles, LA Calcasieu Parish, LA Cameron Parish, LA	0.8209
29404	Lake County-Kenosha County, IL-WI Lake County, IL Kenosha County, WI	1.0799
29420	Lake Havasu City-Kingman, AZ Mohave County, AZ	1.0252
29460	Lakeland-Winter Haven, FL Polk County, FL	0.8461
29540	Lancaster, PA Lancaster County, PA	0.9359
29620	Lansing-East Lansing, MI Clinton County, MI Eaton County, MI Ingham County, MI	1.0315
29700	Laredo, TX Webb County, TX	0.7927
29740	Las Cruces, NM Dona Ana County, NM	0.9311
29820	Las Vegas-Paradise, NV Clark County, NV	1.2119
29940	Lawrence, KS Douglas County, KS	0.8547
30020	Lawton, OK Comanche County, OK	0.8298
30140	Lebanon, PA Lebanon County, PA	0.7820

CBSA Code	Urban Area (Constituent Counties)	Wage Index
30300	Lewiston, ID-WA Nez Perce County, ID Asotin County, WA	0.9373
30340	Lewiston-Auburn, ME Androscoggin County, ME	0.8917
30460	Lexington-Fayette, KY Bourbon County, KY Clark County, KY Fayette County, KY Jessamine County, KY Scott County, KY Woodford County, KY	0.8832
30620	Lima, OH Allen County, OH	0.9285
30700	Lincoln, NE Lancaster County, NE Seward County, NE	0.9633
30780	Little Rock-North Little Rock-Conway, AR Faulkner County, AR Grant County, AR Lonoke County, AR Perry County, AR Pulaski County, AR Saline County, AR	0.8542
30860	Logan, UT-ID Franklin County, ID Cache County, UT	0.8808
30980	Longview, TX Gregg County, TX Rusk County, TX Upshur County, TX	0.8582
31020	Longview, WA Cowlitz County, WA	1.0313
31084	Los Angeles-Long Beach-Glendale, CA Los Angeles County, CA	1.2054
31140	Louisville-Jefferson County, KY-IN Clark County, IN Floyd County, IN Harrison County, IN Washington County, IN Bullitt County, KY Henry County, KY Jefferson County, KY Meade County, KY Nelson County, KY Oldham County, KY Shelby County, KY Spencer County, KY Trimble County, KY	0.8898
31180	Lubbock, TX Crosby County, TX Lubbock County, TX	0.8862
31340	Lynchburg, VA Amherst County, VA Appomattox County, VA Bedford County, VA Campbell County, VA Bedford City, VA Lynchburg City, VA	0.8679
31420	Macon, GA Bibb County, GA Crawford County, GA Jones County, GA Monroe County, GA Twiggs County, GA	0.9044
31460	Madera-Chowchilla, CA Madera County, CA	0.7999
31540	Madison, WI Columbia County, WI Dane County, WI Iowa County, WI	1.1307
31700	Manchester-Nashua, NH Hillsborough County, NH	0.9885
31740	Manhattan, KS Geary County, KS	0.7860

CBSA Code	Urban Area (Constituent Counties)	Wage Index
	Pottawatomie County, KS Riley County, KS	
31860	Mankato-North Mankato, MN Blue Earth County, MN Nicollet County, MN	0.9098
31900	Mansfield, OH Richland County, OH	0.8932
32420	Mayagüez, PR Hormigueros Municipio, PR Mayagüez Municipio, PR	0.3646
32580	McAllen-Edinburg-Mission, TX Hidalgo County, TX	0.8852
32780	Medford, OR Jackson County, OR	1.0077
32820	Memphis, TN-MS-AR Crittenden County, AR DeSoto County, MS Marshall County, MS Tate County, MS Tunica County, MS Fayette County, TN Shelby County, TN Tipton County, TN	0.9205
32900	Merced, CA Merced County, CA	1.2241
33124	Miami-Miami Beach-Kendall, FL Miami-Dade County, FL	1.0144
33140	Michigan City-La Porte, IN LaPorte County, IN	0.9485
33260	Midland, TX Midland County, TX	0.9727
33340	Milwaukee-Waukesha-West Allis, WI Milwaukee County, WI Ozaukee County, WI Washington County, WI Waukesha County, WI	1.0200
33460	Minneapolis-St. Paul-Bloomington, MN-WI Anoka County, MN Carver County, MN Chisago County, MN Dakota County, MN Hennepin County, MN Isanti County, MN Ramsey County, MN Scott County, MN Sherburne County, MN Washington County, MN Wright County, MN Pierce County, WI St. Croix County, WI	1.1161
33540	Missoula, MT Missoula County, MT	0.8935
33660	Mobile, AL Mobile County, AL	0.7949
33700	Modesto, CA Stanislaus County, CA	1.2123
33740	Monroe, LA Ouachita Parish, LA Union Parish, LA	0.8008
33780	Monroe, MI Monroe County, MI	0.8698
33860	Montgomery, AL Autauga County, AL Elmore County, AL Lowndes County, AL Montgomery County, AL	0.8346
34060	Morgantown, WV Monongalia County, WV Preston County, WV	0.8150
34100	Morristown, TN Grainger County, TN Hamblen County, TN Jefferson County, TN	0.7046
34580	Mount Vernon-Anacortes, WA Skagit County, WA	1.0379

CBSA Code	Urban Area (Constituent Counties)	Wage Index
34620	Muncie, IN Delaware County, IN	0.8219
34740	Muskegon-Norton Shores, MI Muskegon County, MI	0.9805
34820	Myrtle Beach-North Myrtle Beach-Conway, SC Horry County, SC	0.8726
34900	Napa, CA Napa County, CA	1.4628
34940	Naples-Marco Island, FL Collier County, FL	0.9714
34980	Nashville-Davidson—Murfreesboro-Franklin, TN Cannon County, TN Cheatham County, TN Davidson County, TN Dickson County, TN Hickman County, TN Macon County, TN Robertson County, TN Rutherford County, TN Smith County, TN Sumner County, TN Trousdale County, TN Williamson County, TN Wilson County, TN	0.9390
35004	Nassau-Suffolk, NY Nassau County, NY Suffolk County, NY	1.2333
35084	Newark-Union, NJ-PA Essex County, NJ Hunterdon County, NJ Morris County, NJ Sussex County, NJ Union County, NJ Pike County, PA	1.1461
35300	New Haven-Milford, CT New Haven County, CT	1.1534
35380	New Orleans-Metairie-Kenner, LA Jefferson Parish, LA Orleans Parish, LA Plaquemines Parish, LA St. Bernard Parish, LA St. Charles Parish, LA St. John the Baptist Parish, LA St. Tammany Parish, LA	0.9085
35644	New York-White Plains-Wayne, NY-NJ Bergen County, NJ Hudson County, NJ Passaic County, NJ Bronx County, NY Kings County, NY New York County, NY Putnam County, NY Queens County, NY Richmond County, NY Rockland County, NY Westchester County, NY	1.2949
35660	Niles-Benton Harbor, MI Berrien County, MI	0.8887
35840	North Port-Bradenton-Sarasota, FL Manatee County, FL Sarasota County, FL	0.9495
35980	Norwich-New London, CT New London County, CT	1.1234
36084	Oakland-Fremont-Hayward, CA Alameda County, CA Contra Costa County, CA	1.6374
36100	Ocala, FL Marion County, FL	0.8482
36140	Ocean City, NJ Cape May County, NJ	1.0896
36220	Odessa, TX Ector County, TX	0.9451
36260	Ogden-Clearfield, UT Davis County, UT Morgan County, UT Weber County, UT	0.9282

CBSA Code	Urban Area (Constituent Counties)	Wage Index
36420	Oklahoma City, OK Canadian County, OK Cleveland County, OK Grady County, OK Lincoln County, OK Logan County, OK McClain County, OK Oklahoma County, OK	0.8892
36500	Olympia, WA Thurston County, WA	1.1287
36540	Omaha-Council Bluffs, NE-IA Harrison County, IA Mills County, IA Pottawattamie County, IA Cass County, NE Douglas County, NE Sarpy County, NE Saunders County, NE Washington County, NE	0.9599
36740	Orlando-Kissimmee-Sanford, FL Lake County, FL Orange County, FL Osceola County, FL Seminole County, FL	0.9159
36780	Oshkosh-Neenah, WI Winnebago County, WI	0.9582
36980	Owensboro, KY Daviess County, KY Hancock County, KY McLean County, KY	0.8384
37100	Oxnard-Thousand Oaks-Ventura, CA Ventura County, CA	1.2397
37340	Palm Bay-Melbourne-Titusville, FL Brevard County, FL	0.9226
37380	Palm Coast, FL Flagler County, FL	0.8419
37460	Panama City-Lynn Haven-Panama City Beach, FL Bay County, FL	0.7967
37620	Parkersburg-Marietta-Vienna, WV-OH Washington County, OH Pleasants County, WV Wirt County, WV Wood County, WV	0.7467
37700	Pascagoula, MS George County, MS Jackson County, MS	0.8312
37764	Peabody, MA Essex County, MA	1.0996
37860	Pensacola-Ferry Pass-Brent, FL Escambia County, FL Santa Rosa County, FL	0.8267
37900	Peoria, IL Marshall County, IL Peoria County, IL Stark County, IL Tazewell County, IL Woodford County, IL	0.9163
37964	Philadelphia, PA Bucks County, PA Chester County, PA Delaware County, PA Montgomery County, PA Philadelphia County, PA	1.0818
38060	Phoenix-Mesa-Glendale, AZ Maricopa County, AZ Pinal County, AZ	1.0662
38220	Pine Bluff, AR Cleveland County, AR Jefferson County, AR Lincoln County, AR	0.8025
38300	Pittsburgh, PA Allegheny County, PA Armstrong County, PA Beaver County, PA Butler County, PA Fayette County, PA Washington County, PA Westmoreland County, PA	0.8619

CBSA Code	Urban Area (Constituent Counties)	Wage Index
38340	Pittsfield, MA Berkshire County, MA	1.0388
38540	Pocatello, ID Bannock County, ID Power County, ID	0.9523
38660	Ponce, PR Juana Díaz Municipio, PR Ponce Municipio, PR Villalba Municipio, PR	0.4320
38860	Portland-South Portland-Biddeford, ME Cumberland County, ME Sagadahoc County, ME York County, ME	0.9905
38900	Portland-Vancouver-Hillsboro, OR-WA Clackamas County, OR Columbia County, OR Multnomah County, OR Washington County, OR Yamhill County, OR Clark County, WA Skamania County, WA	1.1495
38940	Port St. Lucie, FL Martin County, FL St. Lucie County, FL	1.0740
39100	Poughkeepsie-Newburgh-Middletown, NY Dutchess County, NY Orange County, NY	1.1350
39140	Prescott, AZ Yavapai County, AZ	1.2253
39300	Providence-New Bedford-Fall River, RI-MA Bristol County, MA Bristol County, RI Kent County, RI Newport County, RI Providence County, RI Washington County, RI	1.0731
39340	Provo-Orem, UT Juab County, UT Utah County, UT	0.9336
39380	Pueblo, CO Pueblo County, CO	0.8735
39460	Punta Gorda, FL Charlotte County, FL	0.8773
39540	Racine, WI Racine County, WI	1.0597
39580	Raleigh-Cary, NC Franklin County, NC Johnston County, NC Wake County, NC	0.9827
39660	Rapid City, SD Meade County, SD Pennington County, SD	1.0459
39740	Reading, PA Berks County, PA	0.8918
39820	Redding, CA Shasta County, CA	1.4146
39900	Reno-Sparks, NV Storey County, NV Washoe County, NV	1.0436

CBSA Code	Urban Area (Constituent Counties)	Wage Index
40060	Richmond, VA Amelia County, VA Caroline County, VA Charles City County, VA Chesterfield County, VA Cumberland County, VA Dinwiddie County, VA Goochland County, VA Hanover County, VA Henrico County, VA King and Queen County, VA King William County, VA Louisa County, VA New Kent County, VA Powhatan County, VA Prince George County, VA Sussex County, VA Colonial Heights City, VA Hopewell City, VA Petersburg City, VA Richmond City, VA	0.9677
40140	Riverside-San Bernardino-Ontario, CA Riverside County, CA San Bernardino County, CA	1.1553
40220	Roanoke, VA Botetourt County, VA Craig County, VA Franklin County, VA Roanoke County, VA Roanoke City, VA Salem City, VA	0.8841
40340	Rochester, MN Dodge County, MN Olmsted County, MN Wabasha County, MN	1.0960
40380	Rochester, NY Livingston County, NY Monroe County, NY Ontario County, NY Orleans County, NY Wayne County, NY	0.8609
40420	Rockford, IL Boone County, IL Winnebago County, IL	1.0049
40484	Rockingham County-Strafford County, NH Rockingham County, NH Strafford County, NH	1.0042
40580	Rocky Mount, NC Edgecombe County, NC Nash County, NC	0.9049
40660	Rome, GA Floyd County, GA	0.8817
40900	Sacramento--Arden-Arcade--Roseville, CA El Dorado County, CA Placer County, CA Sacramento County, CA Yolo County, CA	1.3949
40980	Saginaw-Saginaw Township North, MI Saginaw County, MI	0.8742
41060	St. Cloud, MN Benton County, MN Stearns County, MN	1.1060
41100	St. George, UT Washington County, UT	0.9148
41140	St. Joseph, MO-KS Doniphan County, KS Andrew County, MO Buchanan County, MO DeKalb County, MO	1.0318

CBSA Code	Urban Area (Constituent Counties)	Wage Index
41180	St. Louis, MO-IL Bond County, IL Calhoun County, IL Clinton County, IL Jersey County, IL Macoupin County, IL Madison County, IL Monroe County, IL St. Clair County, IL Crawford County, MO Franklin County, MO Jefferson County, MO Lincoln County, MO St. Charles County, MO St. Louis County, MO Warren County, MO Washington County, MO St. Louis City, MO	0.9105
41420	Salem, OR Marion County, OR Polk County, OR	1.1151
41500	Salinas, CA Monterey County, CA	1.5711
41540	Salisbury, MD Somerset County, MD Wicomico County, MD	0.9020
41620	Salt Lake City, UT Salt Lake County, UT Summit County, UT Tooele County, UT	0.9281
41660	San Angelo, TX Irion County, TX Tom Green County, TX	0.8317
41700	San Antonio-New Braunfels, TX Atascosa County, TX Bandera County, TX Bexar County, TX Comal County, TX Guadalupe County, TX Kendall County, TX Medina County, TX Wilson County, TX	0.9013
41740	San Diego-Carlsbad-San Marcos, CA San Diego County, CA	1.1858
41780	Sandusky, OH Erie County, OH	0.8700
41884	San Francisco-San Mateo-Redwood City, CA Marin County, CA San Francisco County, CA San Mateo County, CA	1.5740
41900	San Germán-Cabo Rojo, PR Cabo Rojo Municipio, PR Lajas Municipio, PR Sabana Grande Municipio, PR San Germán Municipio, PR	0.4567
41940	San Jose-Sunnyvale-Santa Clara, CA San Benito County, CA Santa Clara County, CA	1.6730
41980	San Juan-Caguas-Guaynabo, PR Aguas Buenas Municipio, PR Aibonito Municipio, PR Arecibo Municipio, PR Barceloneta Municipio, PR Barranquitas Municipio, PR Bayamón Municipio, PR Caguas Municipio, PR Camuy Municipio, PR Canóvanas Municipio, PR Carolina Municipio, PR Cataño Municipio, PR Cayey Municipio, PR Ciales Municipio, PR Cidra Municipio, PR	0.4303

CBSA Code	Urban Area (Constituent Counties)	Wage Index
	Comerío Municipio, PR Corozal Municipio, PR Dorado Municipio, PR Florida Municipio, PR Guaynabo Municipio, PR Gurabo Municipio, PR Hatillo Municipio, PR Humacao Municipio, PR Juncos Municipio, PR Las Piedras Municipio, PR Loíza Municipio, PR Manatí Municipio, PR Maunabo Municipio, PR Morovis Municipio, PR Naguabo Municipio, PR Naranjito Municipio, PR Orocovis Municipio, PR Quebradillas Municipio, PR Río Grande Municipio, PR San Juan Municipio, PR San Lorenzo Municipio, PR Toa Alta Municipio, PR Toa Baja Municipio, PR Trujillo Alto Municipio, PR Vega Alta Municipio, PR Vega Baja Municipio, PR Yabucoa Municipio, PR	
42020	San Luis Obispo-Paso Robles, CA San Luis Obispo County, CA	1.2927
42044	Santa Ana-Anaheim-Irvine, CA Orange County, CA	1.2181
42060	Santa Barbara-Santa Maria-Goleta, CA Santa Barbara County, CA	1.1986
42100	Santa Cruz-Watsonville, CA Santa Cruz County, CA	1.6768
42140	Santa Fe, NM Santa Fe County, NM	1.0864
42220	Santa Rosa-Petaluma, CA Sonoma County, CA	1.6167
42340	Savannah, GA Bryan County, GA Chatham County, GA Effingham County, GA	0.8918
42540	Scranton--Wilkes-Barre, PA Lackawanna County, PA Luzerne County, PA Wyoming County, PA	0.8252
42644	Seattle-Bellevue-Everett, WA King County, WA Snohomish County, WA	1.1574
42680	Sebastian-Vero Beach, FL Indian River County, FL	0.9111
43100	Sheboygan, WI Sheboygan County, WI	0.9248
43300	Sherman-Denison, TX Grayson County, TX	0.8292
43340	Shreveport-Bossier City, LA Bossier Parish, LA Caddo Parish, LA De Soto Parish, LA	0.8550
43580	Sioux City, IA-NE-SD Woodbury County, IA Dakota County, NE Dixon County, NE Union County, SD	0.9106
43620	Sioux Falls, SD Lincoln County, SD McCook County, SD Minnehaha County, SD Turner County, SD	0.9314
43780	South Bend-Mishawaka, IN-MI St. Joseph County, IN Cass County, MI	0.9964
43900	Spartanburg, SC Spartanburg County, SC	0.9268
44060	Spokane, WA Spokane County, WA	1.0588

CBSA Code	Urban Area (Constituent Counties)	Wage Index
44100	Springfield, IL Menard County, IL Sangamon County, IL	0.9145
44140	Springfield, MA Franklin County, MA Hampden County, MA Hampshire County, MA	1.0236
44180	Springfield, MO Christian County, MO Dallas County, MO Greene County, MO Polk County, MO Webster County, MO	0.8271
44220	Springfield, OH Clark County, OH	0.9249
44300	State College, PA Centre County, PA	0.8793
44600	Steubenville-Weirton, OH-WV Jefferson County, OH Brooke County, WV Hancock County, WV	0.7326
44700	Stockton, CA San Joaquin County, CA	1.2576
44940	Sumter, SC Sumter County, SC	0.7873
45060	Syracuse, NY Madison County, NY Onondaga County, NY Oswego County, NY	0.9631
45104	Tacoma, WA Pierce County, WA	1.1362
45220	Tallahassee, FL Gadsden County, FL Jefferson County, FL Leon County, FL Wakulla County, FL	0.8820

CBSA Code	Urban Area (Constituent Counties)	Wage Index
45300	Tampa-St. Petersburg-Clearwater, FL Hernando County, FL Hillsborough County, FL Pasco County, FL Pinellas County, FL	0.9068
45460	Terre Haute, IN Clay County, IN Sullivan County, IN Vermillion County, IN Vigo County, IN	0.9220
45500	Texarkana, TX-Texarkana, AR Miller County, AR Bowie County, TX	0.7654
45780	Toledo, OH Fulton County, OH Lucas County, OH Ottawa County, OH Wood County, OH	0.9447
45820	Topeka, KS Jackson County, KS Jefferson County, KS Osage County, KS Shawnee County, KS Wabaunsee County, KS	0.8967
45940	Trenton-Ewing, NJ Mercer County, NJ	1.0167
46060	Tucson, AZ Pima County, AZ	0.9495
46140	Tulsa, OK Creek County, OK Okmulgee County, OK Osage County, OK Pawnee County, OK Rogers County, OK Tulsa County, OK Wagoner County, OK	0.8802

CBSA Code	Urban Area (Constituent Counties)	Wage Index
46220	Tuscaloosa, AL Greene County, AL Hale County, AL Tuscaloosa County, AL	0.8003
46340	Tyler, TX Smith County, TX	0.8078
46540	Utica-Rome, NY Herkimer County, NY Oneida County, NY	0.8485
46660	Valdosta, GA Brooks County, GA Echols County, GA Lanier County, GA Lowndes County, GA	0.7937
46700	Vallejo-Fairfield, CA Solano County, CA	1.4939
47020	Victoria, TX Calhoun County, TX Goliad County, TX Victoria County, TX	0.8232
47220	Vineland-Millville-Bridgeton, NJ Cumberland County, NJ	1.0432
47260	Virginia Beach-Norfolk-Newport News, VA-NC Currituck County, NC Gloucester County, VA Isle of Wight County, VA James City County, VA Mathews County, VA Surry County, VA York County, VA Chesapeake City, VA Hampton City, VA Newport News City, VA Norfolk City, VA Poquoson City, VA Portsmouth City, VA Suffolk City, VA Virginia Beach City, VA Williamsburg City, VA	0.8975
47300	Visalia-Porterville, CA Tulare County, CA	1.0756
47380	Waco, TX McLennan County, TX	0.8417
47580	Warner Robins, GA Houston County, GA	0.7951
47644	Warren-Troy-Farmington Hills, MI Lapeer County, MI Livingston County, MI Macomb County, MI Oakland County, MI St. Clair County, MI	0.9662
47894	Washington-Arlington-Alexandria, DC-VA-MD-WV District of Columbia, DC Calvert County, MD Charles County, MD Prince George's County, MD Arlington County, VA Clarke County, VA Fairfax County, VA Fauquier County, VA Loudoun County, VA Prince William County, VA Spotsylvania County, VA Stafford County, VA Warren County, VA Alexandria City, VA Fairfax City, VA Falls Church City, VA Fredericksburg City, VA Manassas City, VA Manassas Park City, VA Jefferson County, WV	1.0722
47940	Waterloo-Cedar Falls, IA Black Hawk County, IA Bremer County, IA Grundy County, IA	0.8476
48140	Wausau, WI Marathon County, WI	0.9358

CBSA Code	Urban Area (Constituent Counties)	Wage Index
48300	Wenatchee-East Wenatchee, WA Chelan County, WA Douglas County, WA	0.9631
48424	West Palm Beach-Boca Raton-Boynton Beach, FL Palm Beach County, FL	0.9949
48540	Wheeling, WV-OH Belmont County, OH Marshall County, WV Ohio County, WV	0.6686
48620	Wichita, KS Butler County, KS Harvey County, KS Sedgwick County, KS Sumner County, KS	0.8913
48660	Wichita Falls, TX Archer County, TX Clay County, TX Wichita County, TX	0.9581
48700	Williamsport, PA Lycoming County, PA	0.7267
48864	Wilmington, DE-MD-NJ New Castle County, DE Cecil County, MD Salem County, NJ	1.0597
48900	Wilmington, NC Brunswick County, NC New Hanover County, NC Pender County, NC	0.9150
49020	Winchester, VA-WV Frederick County, VA Winchester City, VA Hampshire County, WV	1.0018
49180	Winston-Salem, NC Davie County, NC Forsyth County, NC Stokes County, NC Yadkin County, NC	0.8953
49340	Worcester, MA Worcester County, MA	1.1030
49420	Yakima, WA Yakima County, WA	1.0083
49500	Yauco, PR Guánica Municipio, PR Guayanilla Municipio, PR Peñuelas Municipio, PR Yauco Municipio, PR	0.3542
49620	York-Hanover, PA York County, PA	0.9542
49660	Youngstown-Warren-Boardman, OH-PA Mahoning County, OH Trumbull County, OH Mercer County, PA	0.8639
49700	Yuba City, CA Sutter County, CA Yuba County, CA	1.1061
49740	Yuma, AZ Yuma County, AZ	0.9298

[2]At this time, there are no hospitals in these urban areas on which to base a wage index. Therefore, the urban wage index value is based on the average wage index of all urban areas within the State.

[FR Doc. 2010–17753 Filed 7–16–10; 4:15 pm]

BILLING CODE 4120–01–C

Federal Register

Friday,
July 23, 2010

Part III

Consumer Product Safety Commission

16 CFR Parts 1219, 1220, and 1500

Safety Standards for Full-Size Baby Cribs and Non-Full-Size Baby Cribs; Notice of Proposed Rulemaking; Proposed Rule

CONSUMER PRODUCT SAFETY COMMISSION

16 CFR Parts 1219, 1220, and 1500

[CPSC Docket No. CPSC–2010–0075]

Safety Standards for Full-Size Baby Cribs and Non-Full-Size Baby Cribs; Notice of Proposed Rulemaking

AGENCY: Consumer Product Safety Commission.

ACTION: Notice of proposed rulemaking.

SUMMARY: Section 104(b) of the Consumer Product Safety Improvement Act of 2008 ("CPSIA") requires the United States Consumer Product Safety Commission ("CPSC," "Commission" or "we") to promulgate consumer product safety standards for durable infant or toddler products. These standards are to be "substantially the same as" applicable voluntary standards or more stringent than the voluntary standard if the Commission concludes that more stringent requirements would further reduce the risk of injury associated with the product. The Commission is proposing safety standards for full-size and non-full-size baby cribs in response to the direction under section 104(b) of the CPSIA.[1] Section 104(c) specifies that the crib standards will cover used as well as new cribs. The crib standards will apply to anyone who manufactures, distributes or contracts to sell a crib; to child care facilities, and others holding themselves out to be knowledgeable about cribs; to anyone who leases, sublets or otherwise places a crib in the stream of commerce; and to owners and operators of places of public accommodation affecting commerce.

DATES: Written comments must be received by October 6, 2010.

ADDRESSES: Comments related to the Paperwork Reduction Act aspects of the recordkeeping, marking and instructional literature requirements of the proposed rule should be directed to the Office of Information and Regulatory Affairs, OMB, Attn: CPSC Desk Officer, FAX: 202–395–6974, or e-mailed to *oira_submission@omb.eop.gov.*

Other comments, identified by Docket No. CPSC–2010–0075, may be submitted by any of the following methods:

Electronic Submissions

Submit electronic comments in the following way:

Federal eRulemaking Portal: http://www.regulations.gov. Follow the instructions for submitting comments.

To ensure timely processing of comments, the Commission is no longer accepting comments submitted by electronic mail (e-mail) except through *www.regulations.gov.*

Written Submissions

Submit written submissions in the following way:

Mail/Hand delivery/Courier (for paper, disk, or CD–ROM submissions), preferably in five copies, to: Office of the Secretary, Consumer Product Safety Commission, Room 502, 4330 East West Highway, Bethesda, MD 20814; telephone (301) 504–7923.

Instructions: All submissions received must include the agency name and docket number for this rulemaking. All comments received may be posted without change, including any personal identifiers, contact information, or other personal information provided, to *http://www.regulations.gov.* Do not submit confidential business information, trade secret information, or other sensitive or protected information electronically. Such information should be submitted in writing.

Docket: For access to the docket to read background documents or comments received, go to *http://www.regulations.gov.*

FOR FURTHER INFORMATION CONTACT: Patricia Edwards, Project Manager, Directorate for Engineering Sciences, Consumer Product Safety Commission, 4330 East West Highway, Bethesda, MD 20814; telephone (301) 504–7577; *pedwards@cpsc.gov.*

SUPPLEMENTARY INFORMATION:

A. Background and Statutory Authority

1. Section 104(b) of the Consumer Product Safety Improvement Act

The Consumer Product Safety Improvement Act of 2008 ("CPSIA", Pub. L. 110–314) was enacted on August 14, 2008. Section 104(b) of the CPSIA requires the Commission to promulgate consumer product safety standards for durable infant or toddler products. These standards are to be "substantially the same as" applicable voluntary standards or more stringent than the voluntary standards if the Commission concludes that more stringent requirements would further reduce the risk of injury associated with the product. In this document, the Commission proposes safety standards for full-size and non-full-size cribs. The proposed standard for full-size cribs is substantially the same as a voluntary standard developed by ASTM International (formerly known as the American Society for Testing and Materials), ASTM F 1169–10 *Standard Consumer Safety Specification for Full-Size Baby Cribs,* but with one modification that strengthens the standard. The proposed standard for non-full-size cribs is substantially the same as ASTM F 406–10, *Standard Consumer Safety Specification for Non-Full-Size Baby Cribs,* but with several changes that strengthen the standard.

2. Section 104(c) of the CPSIA

The CPSIA treats cribs differently than other durable infant or toddler products covered by section 104 of the CPSIA. Section 104(c)(2) of the CPSIA states that the section applies to any person that:

> (A) manufactures, distributes in commerce, or contracts to sell cribs;
>
> (B) based on the person's occupation, holds itself out as having knowledge or skill peculiar to cribs, including child care facilities and family child care homes;
>
> (C) is in the business of contracting to sell or resell, lease, sublet, or otherwise place cribs in the stream of commerce; or
>
> (D) owns or operates a place of public accommodation affecting commerce (as defined in section 4 of the Federal Fire Prevention and Control Act of 1974 (15 U.S.C. 2203) applied without regard to the phrase "not owned by the Federal Government").

Section 104(c)(2) of the CPSIA (Pub. L. 110–314).

Section 104(c)(1) of the CPSIA makes it a prohibited act under section 19(a)(1) of the Consumer Product Safety Act ("CPSA") for any person to whom section 104(c) applies to "manufacture, sell, contract to sell or resell, lease, sublet, offer, provide for use, or otherwise place in the stream of commerce a crib that is not in compliance with a standard promulgated under subsection (b) [of the CPSIA]." Section 104(c)(3) of the CPSIA defines "crib" as including new and used cribs, full-size and non-full-size cribs, portable cribs, and crib pens.

Thus, the crib standards will apply to owners and operators of child care facilities (including in-home child care) and public accommodations such as hotels and motels, as well as to manufacturers, distributors, and retailers of cribs. Once the standards are in effect, it will be unlawful to sell, lease or otherwise provide a crib for use that does not meet the standards. As discussed in more detail in part I below, the Commission recognizes the potential

[1] The Commission voted 5–0 to approve publication of this proposed rule. Chairman Inez M. Tenenbaum, Commissioner Nancy A. Nord, and Commissioner Anne M. Northup filed statements concerning this action which may be viewed on the Commission's Web site at *http://www.cpsc.gov/pr/statements.html* or obtained from the Commission's Office of the Secretary.

market impact of this rule on some entities and invites comments on these issues.

3. Existing Mandatory Regulations for Cribs

In 1973, the Commission issued mandatory regulations for full-size cribs, 38 FR 32129 (Nov. 21, 1973), which are codified at 16 CFR part 1508. The standard was amended in 1982, adding a performance requirement to address the hazard of crib cutouts, 47 FR 47534 (Oct. 27, 1982). This standard has requirements addressing crib dimensions, the spacing of crib components, hardware, construction and finishing, assembly instructions, warning statements and marking, recordkeeping, and cutouts. In 1976, the Commission issued similar regulations for non-full-size cribs, 41 FR 6240 (Feb. 12, 1976), codified at 16 CFR part 1509 (also amended in 1982 to address cutouts). According to 16 CFR parts 1508 and 1509, what principally distinguishes full-size from non-full-size cribs are the interior dimensions of the crib. Also, according to these standards, a full-size crib is intended for use in the home, and a non-full-size crib is intended for use "in or around the home, for travel and other purposes." A full-size crib has interior dimensions of 28 ± ⅝ inches (71 ± 1.6 centimeters) in width by 52 ⅜ ± ⅝ inches (133 ± 1.6 centimeters) in length. A non-full-size crib may be either smaller or larger than these dimensions. Full-size and non-full-size cribs also differ in the height of the crib side or rail. Non-full-size cribs include oversized, specialty, undersized and portable cribs. However, any product with mesh/net/screen siding, non-rigidly constructed cribs, cradles, car beds, baby baskets, and bassinets are excluded from the non-full-size crib requirements of 16 CFR part 1509.

The requirements of 16 CFR part 1508 have been included in ASTM F 1169–10, and the requirements of 16 CFR part 1509 have been included in ASTM F 406–10. However, the recordkeeping requirements in the ASTM standards are expanded from the 3-year retention period that is required in 16 CFR parts 1508 and 1509 to a 6-year retention period, which is consistent with the consumer registration provision in section 104(d) of the CPSIA. Also, as explained in part G.2 of this preamble, ASTM F 406–10 (for non-full-size cribs) places the recordkeeping provision in a non-mandatory appendix. The proposed rule would put the recordkeeping provision in the general requirements section of the non-full-size crib standard.

Elsewhere in this issue of the **Federal Register**, the Commission is proposing to revoke the existing CPSC regulations for full-size and non-full-size cribs, 16 CFR parts 1508 and 1509. As explained in the proposed revocation notice, the applicable ASTM standards include the requirements of 16 CFR parts 1508 and 1509. Thus, maintaining them would be redundant. Revoking the existing regulations will allow all the crib-related requirements to be together and will avoid confusion about which requirements apply to cribs.

Related to the proposed revocation of 16 CFR parts 1508 and 1509, the Commission is proposing to revise 16 CFR 1500.18(a)(13) and (14). These provisions currently state that full-size cribs that do not comply with 16 CFR part 1508 and non-full-size cribs that do not comply with 16 CFR part 1509 are banned hazardous substances under the Federal Hazardous Substances Act ("FHSA"). This notice proposes to change the references in 16 CFR 1500.18(a)(13) and (14) to refer to the crib standards the Commission is proposing.

4. Previous Commission Activities Concerning Cribs

In addition to issuing 16 CFR parts 1508 and 1509, the Commission has taken other regulatory and non-regulatory actions concerning crib hazards. In 1996, the Commission published an advance notice of proposed rulemaking ("ANPR") under the FHSA to address the hazard of crib slat disengagement, 61 FR 65996 (Dec. 16, 1996) ("1996 ANPR"). The Commission had become aware of 138 incidents, including 12 deaths due to entrapment, associated with disengagement of crib slats that were reported to the Commission between January 1985 and September 1996. After issuance of the 1996 ANPR, the CPSC staff worked with ASTM to add a provision to ASTM F 1169 to address this hazard. Elsewhere in this issue of the **Federal Register**, the Commission is terminating the rulemaking it began with the 1996 ANPR because the slat disengagement hazard is addressed by the standards the Commission is proposing.

More recently, the Commission's Office of Compliance staff has been involved with numerous investigations and recalls of cribs. Since 2007, CPSC has issued 40 recalls of over 11 million cribs. All but 7 of these recalls were for product defects that created a substantial product hazard, and not for violations of the federal crib regulations.

On November 25, 2008, the Commission published an ANPR discussing options to address the hazards which CPSC staff had identified in the reported crib incidents and recalls. The ANPR focused on drop side crib hardware, other hardware, assembly issues, and wood quality. Comments in response to the ANPR suggested that CPSC should look more broadly at crib safety issues to develop a comprehensive crib rule and seek to harmonize its regulations with international standards. Another comment expressed concern about the potential costs for small businesses that may sell only several hundred cribs per year. Several consumer groups supported mandating the ASTM crib standards and additionally strengthening crib regulations by such actions as banning drop sides, requiring test methods mandated by other standards, and strengthening requirements for crib hardware. The hazards discussed in the 2008 ANPR are addressed in this proposal.

On April 22, 2009, CPSC staff held a public roundtable meeting concerning crib safety to solicit input about existing voluntary and mandatory standards to help the staff in developing crib standards under section 104 of the CPSIA. Information about the crib roundtable and the presentations made by CPSC staff and others are on the Commission's Web site at *http://www.cpsc.gov/info/cribs/infantsleep.html.* Over 100 people attended the roundtable, including representatives from crib manufacturers, testing laboratories, consumer groups, other government agencies, and other interested stakeholders.

B. The Products

1. Definitions

According to existing CPSC standards and the ASTM standards, a crib is a bed designed to provide sleeping accommodations for an infant. As discussed previously, full-size cribs have specific interior dimensions (28 ± ⅝ inches (71 ± 1.6 centimeters) in width by 52⅜ ± ⅝ inches (133 ± 1.6 centimeters) in length). Non-full-size cribs are either smaller or larger than full-size cribs. The category of non-full-size cribs includes oversized, specialty, undersized and portable cribs, but does not include any product with mesh/net/screen siding, non-rigidly constructed cribs, cradles, car beds, baby baskets, or bassinets.

2. The Market for Full-Size Cribs

The CPSC staff estimates that there are currently 68 manufacturers or importers supplying full-size cribs to the United States market. Ten of these

firms are domestic importers (15 percent), 42 are domestic manufacturers (62 percent), 7 are foreign manufacturers (10 percent), and 2 are foreign importers (3 percent). Insufficient information was available about the remaining firms to categorize them.

Based on information from a 2005 survey conducted by the American Baby Group, CPSC staff estimates annual sales of new cribs to be about 2.4 million, of which approximately 2.1 million are full-size cribs (could be an underestimate if new mothers buy more than one crib). CPSC staff estimates that there are currently approximately 591 models of full-size cribs compared to approximately 81 models of non-full-size cribs. Thus, approximately 88 percent of crib models are full-size cribs.

3. The Market for Non-Full-Size Cribs

CPSC staff estimates that there are currently at least 17 manufacturers or importers supplying non-full-size cribs to the United States market. Five of these firms are domestic importers and ten are domestic manufacturers. Insufficient information is available to determine whether the remaining firms are manufacturers or importers. CPSC staff estimates that there are approximately 2.4 million cribs sold to households annually. Of these, approximately 293,000 are non-full-size cribs.

4. Retailers, Child Care Facilities and Places of Public Accommodation

Section 104(c) of the CPSIA explicitly provides that the crib standards issued under this section will apply to retailers (of both new and used cribs), child care facilities, and owners and operators of places of public accommodation affecting commerce. The CPSIA defines a "place of public accommodation affecting commerce" with reference to the Federal Fire Prevention and Control Act of 1974 (but without the phrase that excludes establishments owned by the Federal Government). Thus, the definition under the CPSIA is:

> any inn, hotel, or other establishment * * * that provides lodging to transient guests, except that such term does not include an establishment treated as an apartment building for purposes of any State or local law or regulation or an establishment located within a building that contains not more than 5 rooms for rent or hire and that is actually occupied as a residence by the proprietor of such establishment.

15 U.S.C. 2203(7).

CPSC staff is unable to estimate the number of retailers that may sell or provide cribs. However, the number would be some subset of approximately 24, 985 retail firms in the United States (at least 5, 292 of which sell used products). The CPSC staff estimates that there are approximately 59, 555 firms supplying day care services and 43,303 firms providing public accommodation.

C. Incident Data

In November 2007, CPSC staff began a pilot project known as the Early Warning System ("EWS") to monitor incident reports related to cribs. Between November 1, 2007 and April 11, 2010, the Commission has reports through EWS of 3,584 incidents related to cribs. The year of the incident associated with these reports ranged from 1986 through 2010. However, very few crib-related incidents that occurred before 2007 are reflected in EWS. Data from EWS is not meant to provide an estimate of all crib-related incidents that have occurred during any particular time period. Rather, because a substantial number of EWS incident reports were assigned for follow-up investigation, the EWS incidents provide a better illustration of the hazard patterns associated with incidents involving cribs than other CPSC databases could.

Of the 3,584 incidents reported through EWS, CPSC staff has clearly identified 2,395 incidents as involving full-size cribs, 64 incidents as clearly involving non-full-size cribs, and 1,125 incidents as lacking sufficient data for CPSC staff to determine whether they involved full-size or non-full-size cribs. The prevalent hazards reported in these incidents are common to all cribs, regardless of size. Given the predominance of incident reports identified as involving full-size cribs, the 1,125 incidents in which size of the crib could not be determined are grouped with the category of full-size cribs.

1. Full-Size Cribs (Includes Cribs of Undetermined Size)

This section discusses incident data in the 3,520 reports from EWS involving 2,395 full-size cribs and 1,125 reports involving cribs of an undetermined size. Of these 3,520 incident reports, there were 147 fatalities, 1,675 non-fatal injuries, and 1,698 non-injury incidents. The non-injury incidents range from incidents that could have potentially resulted in injuries or fatalities to general complaints or comments from consumers. Reporting is ongoing; the number of reported fatalities, non-fatal injuries, and non-injury incidents will change in the future.

a. Fatalities

Between November 1, 2007 and April 11, 2010, a total of 147 fatalities associated with full-size cribs were reported to the Commission. A majority of the deaths (107 out of 147, or almost 73 percent) were not related to any structural failure or design flaw of the crib, but fell into the following categories:

- 62 suffocation deaths related to presence of soft bedding;
- 17 asphyxiation deaths related to prone positioning of infant;
- 12 strangulation deaths related to window blind/electrical/other cords in or near crib; and
- 16 remaining deaths resulted from miscellaneous hazards, *e.g.,* plastic bags in crib and use of nursery product accessories in crib

There were 35 fatalities attributable to structural problems of the crib. Nearly all (34 of the 35) were due to head/neck/body entrapments. Over half of these (18 out of 35) were related to drop-side failures. Almost all of the crib failures—whether they occurred due to detachments, disengagements, or breakages—created openings in which the infant became entrapped. One entrapment death resulted from a child becoming trapped between a wall and a crib while trying to climb out of the crib; there was a crib assembly problem that prevented the mattress support from being lowered sufficiently. The non-entrapment death resulted from a loose screw becoming lodged in the decedent's throat. (For five fatalities, no information on the circumstances was available.)

b. Non-Fatal Injuries

Of the 3,520 incident reports involving full-size (and undetermined size) cribs, 1,675 reported a crib-related injury. The vast majority (97 percent) of these injuries were not serious enough to require hospitalization. Approximately half of those that did require hospitalization involved limb or skull fractures and other head injuries resulting from falls from cribs. Most of the remaining injuries resulted from children getting their limbs caught between crib slats, falling inside the crib and hitting the crib structure, or getting stuck in gaps created by structural failures.

c. Hazard Pattern Identification

CPSC staff considered all 3,520 incidents (including fatalities, non-fatalities, and non-injury incidents) involving full-size cribs (including cribs of undetermined size) to identify hazard patterns related to these incidents. CPSC

staff grouped these incidents into four broad categories: (1) Product-related; (2) non-product related; (3) recall-related; and (4) miscellaneous. More detail is provided in the Epidemiology staff's memorandum that is part of the CPSC staff's briefing package available on the CPSC Web site at *http://www.cpsc.gov.*

Product-related. About 82 percent of the 3,520 incidents reported some sort of failure or defect in the product itself. Beginning with the most frequently reported concerns these included:

- Falls from cribs accounted for approximately 23 percent (about 800 reports) of the 3,520 incidents. This category accounts for the largest proportion of injuries, but no fatalities.
- Crib drop-side-related problems, which include drop-side detachment, operation, hardware, and assembly issues, among others, accounted for about 22 percent (approximately 770 reports) of the incidents. This category accounts for 12 percent of all reported fatalities.
- Infants getting their limbs caught between the crib slats accounted for 12 percent (about 430 reports) of the incidents in the EWS. No fatalities were reported in this category.
- Wood-related issues were reported in about 12 percent (approximately 410 reports) of all incidents in the EWS. This includes fractured slats, slat detachments, and fractured rails, among others. One fatality was reported in this category.
- Mattress support-related problems were reported in about 5 percent (approximately 170 reports) of the incidents. Four fatalities were reported in this category.
- Mattress fit problems were reported in about 3 percent (about 100 reports) of the incidents in the EWS. These problems can cause partial or full body entrapments in the space between mattress and crib side. Numerous bruising injuries but no fatalities were reported in this category.
- Paint-related issues were reported/complained of in about 2 percent (approximately 90 reports) of the EWS reports. These mostly expressed concern about a possible choking hazard or lead exposure from children chewing on paint chips.
- Miscellaneous problems with the crib structure were reported in 3 percent (120 reports) of the EWS incidents. These included non-drop-side or drop gate failures, sharp catch-points, stability and/or other structural issues and included 12 fatalities.

Non-product-related. Approximately 10 percent (about 340 reports) of the 3,520 incident reports were of deaths, injuries, or non-injury incidents that could not be associated with any product defect or failure. As previously noted, most fatalities in full-size cribs were associated with the use of soft/extra bedding in the crib, prone positioning of the infant on the sleep surface, and the presence of hazardous surroundings in and around the crib.

Recall-related. About 5 percent (approximately 180 reports) of the 3,520 reports were related to recalled cribs. Most of the reports were complaints or inquiries from consumers regarding a recalled product.

Miscellaneous. The remaining 3 percent (about 100 reports) of the incidents reported a variety of miscellaneous problems including bug-infested cribs, odor/fumes emanating from cribs, unexplained fatalities/injuries to infants in cribs, and ambiguous descriptions of problems. There were five fatalities included in this category.

2. Non-Full-Size Cribs

This category includes portable cribs and other cribs that are either smaller or larger than the dimensions specified for full-size cribs. For its review of incident data, staff included in the category of non-full-size cribs only those cribs it could positively identify as non-full-size cribs. CPSC staff is aware of 64 incidents related to non-full-size cribs that have been reported between November 1, 2007 and April 11, 2010. Among these incidents, there were 6 fatalities, 28 injuries, and 30 non-injury incidents. Because reporting is ongoing, the number of reported fatalities, non-fatal injuries, and non-injury incidents presented here may change in the future.

a. Fatalities

Of the six fatalities, three were attributed to the presence of a cushion/pillow in the sleep area. One fatality was due to the prone positioning of the infant on the sleep surface. One fatality resulted from the infant getting entrapped in a gap opened up by loose/missing screws. Very little information was available on the circumstances of the last fatality.

b. Non-Fatal Injuries

Among the 28 non-fatal injuries reported, only 2 required any hospitalization. Most of the remaining injuries, which include fractures, bruises, and lacerations, resulted from children falling and hitting the crib structure while in the crib, falling or climbing out of the crib, and children getting their limbs caught in the crib slats.

c. Hazard Pattern Identification

CPSC staff considered all 64 incidents (including fatalities, non-fatalities, and non-injury incidents) involving non-full-size cribs to identify hazard patterns related to these incidents. The hazard patterns are similar to those among full-size cribs.

Product-related. Seventy-two percent of the incidents reported product-related issues. These primarily involved falls from cribs, limbs becoming caught between slats, issues related to drop-sides and non-drop-sides (such as detachments and operation/hardware issues), and wood-related issues (including three slat detachments). This category includes one fatality which was related to non-drop-side hardware.

Non-product-related. Nineteen percent of the incidents reported non-product-related issues. These included four of the six fatalities—three on pillows/cushions and one from prone positioning—and eight injuries resulting from the infant hitting and getting hurt on the crib structure while in the crib.

Recall-related. Three percent of the reports were related to recalled products.

Miscellaneous. The remaining 6 percent of incidents included reports of such miscellaneous issues as a bug-infested crib, an ambiguous description of an incident requiring hospitalization of the infant, and a fatality with very little information on the circumstances involved.

D. Voluntary and International Standards

As part of its work in developing standards for full-size and non-full-size cribs under section 104 of the CPSIA, CPSC staff reviewed requirements of existing voluntary and international standards related to cribs. The primary such standards currently in effect are the ASTM standards for full-size and non-full-size cribs, a Canadian standard and a European standard. Underwriters Laboratories, Inc. ("UL") has a crib standard, UL 2275. However, the UL standard was not followed by crib manufacturers and is no longer an active standard.

1. The ASTM Standards

ASTM first published its voluntary standard for full-size cribs, ASTM F 1169, *Standard Specification for Full-Size Baby Crib,* in 1988. At that time, provisions included requirements for crib side testing, vertical impact testing, a mattress support system test, a test method for crib side latches, a plastic teething test and requirements for labeling and instructional literature.

ASTM F 1169 was revised in 1999 in response to the Commission's 1996 ANPR to address the integrity of slat-to-rail joints. The revision added a torque test for side spindles and increased the applied weight and number of cycles for cyclic testing. ASTM F 1169 was revised again in 2003 to include requirements addressing corner post entanglements and to make editorial changes. The 2007 revision made further editorial changes. In 2009, the standard was revised significantly to include a limitation on movable sides that effectively eliminates the traditional drop side design in which the front side of the crib can be raised and lowered. The 2009 revision also added a new performance requirement for slat strength. On June 1, 2010, ASTM approved the current version of its full-size crib standard with a slight change to the name, ASTM F 1169–10, *Standard Consumer Safety Specification for Full-Size Baby Cribs,* which is discussed in section E of this preamble.

In 1997, ASTM first published a standard for non-full-size cribs, ASTM F 1822, *Standard Consumer Safety Specification for Non-Full-Size Baby Cribs.* ASTM F 1822 covered products that provide sleeping accommodations for a child and have interior dimensions between 17″ and 26″ side and between 35″ and 50⅜″ long (excluding bassinets, cradles, and baskets). In June 2002, in order to group products with similar uses, ASTM combined its non-full-size crib standard, ASTM F 1822–97, with its play yard standard (F 406–99, *Standard Consumer Safety Specification for Play Yards)* to create ASTM F 406–02, *Standard Consumer Safety Specification for Non-Full-Size Baby Cribs/Play Yards.* ASTM revised ASTM F 406 several times subsequently. On June 1, 2010, ASTM approved the current version of its non-full-size crib standard, F 406–10, which is discussed in section E of this preamble.

2. International Standards

Health Canada's crib standard, SOR/86–969, and the European standard, EN 716, have several performance requirements that have essentially been included in ASTM F 1169–10. These include the cyclic side (shake) test and the mattress support system vertical impact test (with slight modification) from the Canadian standard. The slat/spindle strength test in ASTM F 1169–10 evolved from the EN 716 requirements. However, the ASTM F 1169–10 test is more stringent than the slat/spindle test in the EN standard. The Commission recognizes the efficiencies to be gained from harmonization with international standards but given staff's conclusions that its proposed tests will reduce the likelihood of injury and death, adopts for this notice the more stringent tests described above. The Commission recognizes the potential market impact of this rule on some entities that sell in the global marketplace and invites comments on the proposed tests as well.

E. The ASTM 2010 Crib Standards

As noted in the previous section of this preamble, both ASTM F 1169 and ASTM F 406 have been significantly revised in 2009 and 2010. The Commission is adopting the 2010 version of these standards with certain modifications discussed in section G of this preamble. Drawing from its experience with investigations and recalls related to cribs, from knowledge gained through the crib roundtable and ANPR comments, and from participation in ASTM meetings, CPSC staff developed a list of areas the staff believes should be considered in revised standards for full-size and non-full-size cribs. These areas of consideration are:

- Drop-side hardware systems
- Non-drop-side hardware systems
- Mattress support issues
- Wood screws
- Assembly and instruction issues
- General requirements
- Slat integrity/wood quality
- Paint/finish
- Attachments
- Slat spacing
- Climb/fall out
- Mattress fit

Most of these areas are now addressed in ASTM F 1169–10 and ASTM F 406–10. To the extent that there are structural/design issues not adequately addressed by the ASTM standards, the Commission is proposing modifications to address these. This is primarily the case with the non-full-size crib standard that lacks some of the more stringent requirements found in the full-size crib standard. (These proposed modifications are discussed in section G of this preamble.)

Some hazards that CPSC staff identified—such as climbing/falling out of cribs, mattress fit, and limb entrapments—are difficult to address through crib standards. The Commission intends to address these hazards through other means.

Climb/fall out. With regard to the climb/fall out hazard, product changes, such as increasing the height of the crib sides, could create other hazards or lead to use of sleeping arrangements other than cribs (which could be more hazardous). A principal factor in these incidents is the continued use of cribs with children who are capable of climbing out of the crib. The full-size crib standard moved the warning about when to stop using a crib into a higher position in the list of warnings (this warning was already in a prominent position in the non-full-size crib standard).

Mattress fit. With regard to the fit of the crib mattress, CPSC staff's review of available data found no deaths or serious injuries related to this issue. (The fit of the mattress is only an issue with full-size cribs because non-full-size cribs come with a mattress that is required to fit with no gaps larger than ½ inch.) However, a significant gap between the mattress and the crib structure could potentially create an entrapment hazard. The Commission believes this issue would best be addressed through a separate ASTM standard for full-size crib mattresses. ASTM has begun work on such a standard, and CPSC staff is participating in this development.

Limb entrapment. With regard to limb entrapments between slats, no deaths have been associated with this hazard, but some fractures and bruising have been reported. The existing spacing requirement—maximum width of 2⅜ inches (6 cm)—specified in 16 CFR 1508 and 1509 (and maintained in ASTM F 1169–10 and ASTM F 406–10) has been extremely effective in preventing incidents of fatal head/neck entrapment and strangulation. Increasing the spacing requirement to address the limb injuries could increase such fatalities, and decreasing the requirement could result in other limb entrapments of smaller infants or smaller body parts.

1. ASTM F 1169–10 Standard for Full-Size Baby Cribs

ASTM F 1169–10 includes definitions; general requirements; performance requirements; specific test methods; and requirements for marking, labeling, and instructional literature.

Definitions. The definition of full-size crib is the same as the current definition in 16 CFR part 1508. Among the other terms defined are "accessory," "key structural element," "mattress support system," and "movable side."

General requirements. Several general requirements, such as specifications for interior crib dimensions and rail height, spacing of crib components, restrictions on toe holds, prohibition on hardware or fasteners that present mechanical hazards; restrictions on wood screws; and requirements for recordkeeping come from the provisions of 16 CFR part 1508. Other general requirements include, but are not limited to: Paint

and surface coatings must comply with the lead paint restrictions in 16 CFR part 1303; small parts (as defined in 16 CFR part 1501) are prohibited; corner post assemblies must not extend beyond 0.06 inches (1.50 mm) above the upper edge of an end or side panel; movable sides are limited so that traditional drop sides are essentially eliminated, but designs that use a hinged joint that folds down are allowed; and in addition to the restrictions on wood screws that were already in 16 CFR part 1508, wood screws and other fasteners must meet additional requirements.

Performance requirements. ASTM F 1169–10 contains numerous performance requirements and specifies applicable test methods. These include: A requirement for spindle slat strength testing; mattress support system tests (impact and static load testing and openings requirements); crib side tests (includes crib side static and impact tests and a crib side spindle/slat torque test); a plastic teething rail test; crib side latch tests; dynamic structural cyclic (shake) tests (includes horizontal and vertical cyclic testing to simulate shaking); a component separation limitation (post testing); cutout testing; accessories entrapment testing; as well as providing a specified order for these tests.

Marking, labeling and instructional literature. ASTM F 1169–10 includes the marking, labeling and instructional requirements that are currently in 16 CFR part 1508 as well as requirements for warnings concerning suffocation on soft bedding, strangulation on strings or cords, and the hazard of falls from the crib. The ASTM standard also requires that instructions that are easy to read and understand be provided with the crib and that the instructions contain certain information and warnings.

2. ASTM F 406–10 Standard for Non-Full-Size Baby Cribs

Like the ASTM standard for full-size cribs, ASTM F 406–10 includes definitions; general requirements; performance requirements; specific test methods; and requirements for marking, labeling, and instructional literature.

Definitions. The definition of "non-full-size crib" is the same as that in 16 CFR part 1509. Although ASTM 406–10 includes play yards within its scope, and the standard provides a definition of play yard, the Commission is not including play yards in its proposed non-full-size crib standard. (ASTM F 406–10 defines a "play yard" as "a framed enclosure that includes a floor and has mesh or fabric sided panels primarily intended to provide a play or sleeping environment for children. It may fold for storage or travel.") The Commission will be developing a separate standard for play yards in the near future.

General requirements. For the ASTM non-full-size crib standard, general requirements include: Restrictions on corner post assemblies (must not extend beyond 0.06 inches (1.50 mm) above the upper edge of an end or side panel); requirements that cribs meet CPSC provisions concerning sharp points and edges, small parts, lead paint, and flammable solids; restrictions concerning scissoring, shearing and pinching; toy accessory requirements; requirements for latching and locking mechanisms; and restrictions on openings. The standard also contains requirements concerning protective components, labeling, stability, cord/strap length, coil springs, entrapment in accessories, and for mattresses which must be provided with non-full-size cribs.

Performance and test method requirements. The non-full-size crib standard provides performance requirements, including a requirement for crib side height (including a limitation on crib side configurations that essentially bans traditional drop sides); hardware requirements (including requirements for fasteners and wood screws); construction and finishing requirements; spindle/slat strength testing; mattress support system testing (including vertical impact and static load testing); crib side tests (includes static and impact tests); a plastic teething rail test; foldable side or end latch tests; and dynamic structural cyclic (shake) tests (includes horizontal and vertical cyclic testing to simulate shaking).

Marking, labeling and instructions. ASTM F 406–10 has requirements for marking, labeling and instructions that are similar to the requirements for full-size cribs. However, the standard contains additional provisions for warning statements addressing hazards posed by cribs that are likely to be moved around often.

F. Assessment of Voluntary Standards ASTM F 1169–10 and ASTM F 406–10

1. Section 104(b) of the CPSIA: Consultation and CPSC Staff Review

Section 104(b) of the CPSIA requires the Commission to assess the effectiveness of the voluntary standard in consultation with representatives of consumer groups, juvenile product manufacturers, and other experts. This consultation process for the full-size and non-full-size crib standards has involved an ANPR, a public crib roundtable, and in-depth involvement with ASTM. CPSC staff's consultations with ASTM are ongoing.

2. Full-Size Crib Standard; ASTM F 1169–10

The Commission believes that the provisions of ASTM F 1169–10 are effective to reduce the risk of injury associated with full-size cribs. The Commission is proposing one modification, discussed in section G.1 of this preamble, to strengthen the ASTM standard. This section summarizes how the provisions of ASTM F 1169–10 address the principal crib-related hazards CPC staff has identified.

Moveable side (drop-side) requirements. A review of the incident data indicates that 18 of 35 fatalities attributable to structural failures of cribs were related to drop-side failures. The fatalities occurred when gaps were created when the corner of the drop side dislocated or disengaged from the crib end. ASTM F 1169–10 addresses this type of hazard through a requirement that the sides of a crib be fixed in place and have no movable sections less than 20 inches from the top of the mattress support (effectively eliminating drop sides).

Structural integrity requirements (including non-drop-side hardware). CPSC staff attributed 12 of the 35 fatalities to problems with non-drop-side hardware and poor structural integrity. Many of these incidents occurred when screws or inserts loosened over time causing primary crib elements, such as crib side rails and ends, to separate and create an entrapment hazard. ASTM F 1169–10 addresses this type of hazard through requirements for screw fasteners, locking components, and the cyclic side (shake) test.

Screw fastener and locking feature requirements. Loosening of wood screw and other fasteners has also led to crib incidents. ASTM F 1169–10 includes the wood screw requirements of 16 CFR 1508 and also: Restricts the use of wood screws as primary fasteners; prohibits use of wood screws in structural elements that a consumer would need to assemble; and adds stricter requirements for the use of threaded metal inserts and other metal threaded fasteners.

Alternating horizontal and vertical cyclic side (shake) test. Among the incidents reported through EWS, were problems with the structural integrity of cribs, and hardware issues. The cyclic side (shake) test—which simulates a child's lifetime shaking of the crib—should address the types of incidents

related to loosened joints, detached sides and overall poor structural integrity. The test applies a cyclic force (9,000 vertical and then 9,000 horizontal load cycles using 27 lbf) at the midpoint of each top rail, end and side of the crib.

Mattress support vertical impact test. Among the EWS incidents were 3 deaths due to entrapments between a mattress support and a crib structure and 168 reported non-fatal incidents related to mattress support structural failures. ASTM F 1169–10 includes a mattress impact cyclic test developed by Health Canada. This test consists of dropping a 45-pound mass (20 kg) repeatedly every 4 seconds onto a polyurethane foam test mattress covered in vinyl and supported by the mattress support system.

Crib side vertical impact test. Although a provision was added to the ASTM F 1169 standard in 1999 to require testing of crib side spindles and slats, some incidents involving crib slat disengagement (which can result in entrapment) have continued to occur. ASTM F 1169–10 strengthens that testing requirement by specifying that any crib side with slats must be tested (previously the number of sides was not specified and manufacturers could test just one side).

Slat/spindle strength test. CPSC staff identified 1 death and 219 non-fatal incidents that were related to fractures of the crib slats or rails. Broken or dislocated slats can cause a gap of approximately 5 inches that can result in entrapment. The 2009 version of the ASTM standard required testing slat strength at 56.2 pounds. Based on testing and evaluations by the Commission's Engineering staff, ASTM F 1169–10 makes this test more stringent by requiring a set number of slats to withstand an 80-pound load.

Mis-assembly issues. ASTM F 1169–10 includes a requirement that states: "Crib designs shall only allow assembly of key structural elements in the manufacturer's recommended use position or have markings that indicate their proper orientation. The markings must be conspicuous in the misassembled state." This new requirement will address incidents where mis-assembly has been found to be a contributing factor.

Order of testing. ASTM F 1169–10 specifies the order in which all performance tests must be conducted:

1. Teething rail test
2. Cyclic side (shake) test
3. Crib side latch test
4. Mattress support system vertical impact test
5. Mattress support system static test
6. Crib side vertical impact test
7. Slat/spindle strength test

This order requires that the least stringent test be performed first, and for the testing order to continue in increasing stringency. This order also means that testing begins with a disassembled crib for the teething rail test, and the crib is assembled for the tests up to the slat/spindle strength test which is conducted on disassembled side rails.

CPSC staff believes that the combination of the cyclic side test (simulating a child standing and shaking the top of a side rail), mattress support system vertical impact test (child jumping), side rail impact test (child climbing outside of rail), and the slat/spindle strength tests (child and/or sibling falling against or kicking slats) together comprise a laboratory simulation of a lifetime of use. Each test represents a specific aspect of one life cycle. CPSC staff believes that the new requirements in ASTM F 1169–10 are a significant improvement to the previous standards and should result in more robust cribs.

3. Non-Full-Size Crib Standard; ASTM F 406–10

The Commission believes that the provisions of ASTM F 406–10, with the modifications it proposes, are effective to reduce the risk of injury associated with non-full-size cribs. The Commission is proposing four modifications and two editorial changes, discussed in section G.2 of this preamble, to strengthen the ASTM standard. This section summarizes how the provisions of ASTM F 406–10 address the principal crib-related hazards CPSC staff has identified.

Wood screws and other fasteners. The loosening of wood screws and other fasteners has been involved in crib incidents leading to structural problems and entrapment. ASTM F 406–10 addresses this hazard through requirements that are identical to those in ASTM F 1169–10.

Alternating horizontal and vertical cyclic side test (shake test). ASTM F 406–10 contains the same cyclic for crib sides test that simulates a child's shaking the crib as is provided in ASTM F 1169–10.

Spindle/slat testing. The spindle/slat performance test in ASTM F 406–10 is identical to the one in ASTM F 1169–10.

Mis-assembly issues. This provision concerning mis-assembly is identical to the one in ASTM F 1169–10.

Movable side (drop-side) requirements. Similar to the ASTM standard for full-size cribs, ASTM F 406–10 contains requirements that restrict moveable sides, and have the effect of eliminating traditional drop sides.

G. Description of Proposed Changes to ASTM Standards

CPSC staff has evaluated ASTM F 1169–10 and ASTM F 406–10 to determine the adequacy of these standards and any modification that might be needed to strengthen them. Based on this assessment and consultations with others, the Commission proposes a consumer product safety standard for full-size cribs that incorporates by reference ASTM F 1169–10 with one modification described in this section and proposes a consumer product safety standard for non-full-size cribs that incorporates by reference ASTM F 406–10 with the four modifications and two editorial changes described in this section.

To best understand the proposed standards it is helpful to view the current ASTM standards for full-size cribs and non-full-size cribs at the same time as the Commission's proposed modifications. The ASTM crib standards are available for viewing for this purpose during the comment period through this link: *http://www.astm.org/cpsc.htm*.

1. Proposed Change to the Full-Size Crib Standard (ASTM F 1169–10)

The Commission is proposing one modification to ASTM F 1169–10. ASTM F 1169–10 allows retightening of screws between the crib side latch test and mattress support vertical impact tests. Industry representatives have argued that this allowance is needed because they believe the cyclic side "shake" test will loosen fasteners, which may cause a crib to fail some performance requirements in subsequent tests. ASTM F 1169–10 defines failure as key components separating by 0.04 inch (1.0 mm), typically 1–1½ turns of a fastener.

CPSC staff believes that the combination of performance tests in ASTM F 1169–10 comprise a laboratory simulation of a lifetime of use, and only as a combined whole, functioning together, is this simulation accomplished. Retightening fasteners would sever the chain of accumulated conditioning effects. CPSC staff does not believe that performing the sequence of tests without retightening fasteners is an overly restrictive test. The Canadian standard does not allow for any retightening of fasteners while a crib is tested. According to representatives from Health Canada, this has not been a problem for the vast majority of cribs

tested to the Canadian standard. The CPSC staff is aware of at least ten fatal incidents in which loose screws have contributed to the death of a child. Loosened hardware can lead to gaps in which the child can become entrapped. Thus, it is important for fasteners to remain secure during the useful life of the crib.

2. Proposed Changes to the Non-Full-Size Crib Standard (ASTM F 406–10)

The Commission is proposing four modifications and two editorial changes to ASTM F 406–10. These changes are necessary to adequately address the risk of injury posed by non-full-size cribs. The proposed changes will make the non-full-size crib standard more consistent with the standard for full-size cribs.

Mattress support system cyclic impact test. The Commission proposes to replace the mattress support performance requirement in ASTM F 406–10 with the test requirement developed by Health Canada that is in the full-size crib standard, ASTM F 1169–10. At its May 12, 2010 meeting, the ASTM subcommittee for the F 406 standard reviewed this mattress support impact test for inclusion in ASTM F 406–10 and is expected to vote on it at the next subcommittee meeting. This change is needed to address mattress support hardware and related structural integrity hazards.

Crib side tests. The side impact test in ASTM F 406–10 is less stringent than the side impact test included in the standard for full-size cribs, ASTM F 1169–10 which was revised in 1999 after the Commission's 1996 ANPR concerning crib slat disengagements. However, the same revision was never made to the non-full-size crib standard. The Commission proposes to change the side impact test in the non-full-size crib standard to make it identical to the requirements in ASTM F 1169–10. This includes increasing the weight and number of cycles for the impact testing, and adding the spindle/slat torque test which involves twisting each slat after the side rail impact test to determine whether the side rail impact test has weakened the spindle/slat-to-rail joints which could create an entrapment hazard. The full-size crib standard includes this test, and the Commission proposes adding the same test to the non-full-size crib standard.

Movable side latch tests. These tests had been part of all the previous versions of ASTM F 406 and were called the "Vertical Drop-Side Latch Tests." They were removed during the development of F 406–10 in connection with the new limitation on movable sides. However, movable sides using other methods than a traditional drop-side are still permitted. Thus, the Commission believes the tests are still necessary. The Commission proposes to restore the requirement and rename it "movable side latch tests."

Order of structural tests. ASTM F 406–10 does not specify the order in which tests must be performed for non-full-size cribs. As discussed in section F.2 above, however, ASTM F 1169–10 does specify the test order for full-size cribs. The Commission proposes to specify the same testing order for non-full-size cribs.

Editorial change to limit standard to non-full-size cribs. ASTM F 406–10 covers play yards as well as non-full-size cribs and thus includes specific requirements for mesh/fabric sided products. In the future, the Commission will establish a separate standard for play yards under the process established by section 104 of the CPSIA. The Commission proposes changes to clarify that its standard covers only non-full-size cribs, removing provisions that apply only to mesh/fabric sided products.

Editorial change to place recordkeeping provision in general requirements. ASTM F 406–10 contains a recordkeeping provision that is nearly identical to that in 16 CFR part 1509 (the ASTM provision requires record retention for 6 years, whereas 16 CFR part 1509 requires that records be maintained for 3 years). This recordkeeping provision is in the non-mandatory appendix of ASTM F 406–10. The Commission's proposal places this requirement in the general requirements section (which is the location of the recordkeeping provision in ASTM F 1169–10 for full-size cribs).

H. Effective Date

The Administrative Procedure Act ("APA") generally requires that the effective date of a rule be at least 30 days after publication of the final rule. *Id.* 553(d). To allow time for cribs to come into compliance, the Commission proposes that the standard would become effective 6 months after publication of a final rule. This is consistent with other standards the Commission has proposed under section 104 of the CPSIA. The Commission invites comments regarding the sufficiency of a six-month effective date for the crib standards.

I. Regulatory Flexibility Act

The Regulatory Flexibility Act ("RFA") generally requires that agencies review proposed rules for their potential economic impact on small entities, including small businesses. 5 U.S.C. 603

1. Full-Size Cribs

a. The Market for Full-Size Cribs

As mentioned above, CPSC staff is currently aware of 68 manufacturers or importers supplying full-size cribs to the United States ("U.S.") market (of those that could be categorized, 10 are domestic importers, 42 are domestic manufacturers, 7 are foreign manufacturers, and 2 are foreign importers).

The Juvenile Products Manufacturers Association ("JPMA"), the major U.S. trade association that represents juvenile product manufacturers and importers, runs a voluntary certification program for several juvenile products. Approximately 30 firms (44 percent) supply full-size cribs to the U.S. market that have been certified by JPMA as complying with the ASTM voluntary standard. Additionally, 15 firms claim compliance, although their products have not been certified by JPMA. It is assumed throughout this summary that the 45 firms that are certified or claim to be compliant with earlier ASTM standards will remain compliant with the 2010 version of the ASTM F 1169–10.

According to a 2005 survey conducted by the American Baby Group (*2006 Baby Products Tracking Study*), 90 percent of new mothers own cribs. Approximately 36 percent of wood cribs and 50 percent of metal cribs were handed down or purchased second-hand. Using an average weighted by the ownership of each type of crib (83 percent for wood and 7 percent for metal), CPSC staff estimates that approximately 37 percent of all cribs were handed down or purchased second-hand. Thus about 63 percent of cribs were acquired new. This suggests annual sales of about 2.4 million cribs to households ($.63 \times .9 \times 4.3$ million births per year). To the extent that new mothers own more than one crib, annual sales may be underestimated. Based on a review of the United States market, it appears that there are approximately 591 full-size crib models and 81 non-full-size crib models currently being supplied. Therefore, approximately 88 percent of the crib models on the U.S. market are full-sized. Applying this percentage to the number of cribs sold annually, yields an estimate of 2.1 million full-size cribs sold annually. However, this is a rough estimate, since the percentage of full-size crib models on the market does not necessarily correlate directly to sales.

As noted, section 104 of the CPSIA explicitly mentions retailers of both new and used full-size cribs (child care facilities and places of public accommodation are discussed in the section of this analysis concerning non-full-size cribs). The number of firms that may be selling or providing full-size cribs is unknown, but may be drawn from approximately 24,985 retail firms (at least 5,292 of which sell used products), that may be supplying new or used full-size cribs to the public. The number of affected retailers will be smaller since not all retailers sell full-size cribs.

The Commission is particularly interested in whether this analysis can be enhanced with additional data submitted through the comment period. Accordingly, we ask for comments on the market for full-sized cribs, the amount of existing inventory and the time it will take to manufacture sufficient compliant inventory to meet current market demand and additional demand created by the need to replace non-compliant cribs in hotels, day care centers and other places where cribs are provided for use.

b. Compliance Requirements of the Proposal for Full-Size Cribs

The proposed standard for full-size cribs is nearly identical to ASTM F 1169–10 with the one modification of not allowing screws to be retightened between the crib side latch test and the mattress support vertical test. Based on testing results from Health Canada for the shake test, it appears that only the most poorly constructed cribs will fail when their screws are not retightened during testing. Initial follow-up testing by CPSC staff found that allowing retightening over the entire series of tests could result in this very dangerous hazard going undetected during testing. The incidence of failure during testing when screws are not retightened may be lower under ASTM F 1169–10, due to new requirements that will require that crib hardware include a locking device or other method to impede loosening. Based on this information, it appears that few, if any, firms will need to use better screw mechanisms or redesign their products to comply with the modification.

c. Impact of the Proposal Concerning Full-Size Cribs on Small Business

Under Small Business Administration ("SBA") guidelines, a manufacturer of full-size cribs is small if it has 500 or fewer employees, and an importer is considered small if it has 100 or fewer employees. Based on these guidelines, of the 68 firms currently known to be producing or selling full-size cribs in the United States, 48 are small (36 domestic manufacturers, 10 domestic importers, and 2 firms with unknown sources of supply). There are also probably additional unknown small manufacturers and importers operating in the U.S. market.

According to the SBA, retailers are considered small if they have $7 million or less in annual receipts. Approximately 93 percent of retailers have receipts of less than $5 million, with an additional 3 percent having receipts between $5 million and $9.99 million. Excluding firms with receipts between $5 million and $7 million yields an estimate of 23,236 small retail firms that may potentially be affected by the proposed standard. However, only a small percentage of these small firms actually sell full-size cribs. Thus, the number of small retail firms affected will be much smaller than 23,236.

i. Impact on Small Manufacturers

The impact of the proposed standard on small manufacturers will differ based on whether they currently comply with ASTM F 1169–10. Of the 36 small domestic manufacturers, 24 produce cribs that are certified by JPMA or claim to be in compliance with the voluntary standard. The impact on the 24 compliant firms is not expected to be significant. It seems unlikely that any of these products will require modification to meet the proposed standard. Should any be necessary, it would most likely take the form of a few minor changes (such as more effective screws or screw combinations).

The proposed standard could have a significant impact on one or more of the 12 firms that are not compliant with the ASTM F 1169–10, as their products might require substantial modifications. The costs associated with these modifications could include product design, development and marketing staff time, and product testing. There may also be increased production costs, particularly if additional materials are required. The actual cost of such an effort is unknown, but could be significant, especially for the two firms that rely primarily or entirely on the production and sale of full-size cribs and related products, such as accompanying furniture and bedding, and a third firm that produces only one other product. However, the impact of these costs may be mitigated if they are treated as new product expenses that can be amortized over time.

This analysis assumes that only those firms that produce cribs certified by JPMA or that claim ASTM compliance will pass the voluntary standard's requirements. This is not necessarily the case. CPSC staff has identified many cases where products not certified by JPMA actually comply with the relevant ASTM standard. To the extent that this is true, the impact of the proposed standard will be less significant than described.

ii. Small Importers of Full-Size Cribs

While four of the ten small importers do not comply with the ASTM standard, all would need to find an alternate source of full-size cribs if their existing supplier does not come into compliance with the new requirement of the proposed standard. The cost to importers may increase and they may, in turn, pass some of those increased costs on to consumers. Some importers may respond to the rule by discontinuing the import of their non-complying cribs. However, the impact of such a decision may be mitigated by replacing the non-compliant crib with a complying product or another juvenile product. Deciding to import an alternative product would be a reasonable and realistic way to offset any lost revenue given that most import a variety of products.

iii. Small Retailers of Full-Size Cribs

The CPSIA requires that all full-size cribs sold by retailers comply with the full-size crib rule by the effective date of the final standard. This means that retailers, most of whom are small, will need to verify that any full-size cribs in their inventory and any that they purchase in the future comply with the regulation prior to offering them for sale. CPSC staff believes that most retailers, particularly small retailers, do not keep large inventories of cribs. With an effective date six months after publication of the final rule, retailers of new products should have sufficient time and notification to make this adjustment with little difficulty. The situation for retailers of used cribs is more complicated, however, because they may not always be able to determine whether the full-size cribs they receive are compliant. For the affected retailers, it may be simpler to discontinue the sale of used full-size cribs. However, if cribs represent a small proportion of the products they sell, the impact on these firms may be limited.

iv. Alternatives

Under section 104 of the CPSIA, the primary alternative that would reduce the impact on small entities is to make the voluntary standard mandatory with no modifications. Adopting the current voluntary standard without any changes

could potentially reduce costs for 12 of the 36 small manufacturers and 4 of the 10 small importers who are not already compliant with the voluntary standard. However, these firms will still require substantial product changes in order to meet the voluntary standard. Since the Commission's change adds little to the overall burden of the proposed rule, adopting the voluntary standard with no changes will not significantly offset the burden that is expected for these firms. Additionally, adopting the voluntary standard with no modifications would be unlikely to significantly reduce the impact on small retailers. The primary effect for these retailers (which in most cases should be small) stems from replacing existing inventory with complying product. The proposed changes to the voluntary standard should not significantly affect such replacement costs.

2. Non-Full-Size Cribs

a. The Market for Non-Full-Size Cribs

CPSC staff estimates that there are currently at least 17 manufacturers or importers supplying non-full-size cribs to the United States market (5 are domestic importers, 10 are domestic manufacturers, and insufficient information is available to determine whether the remaining firms are manufacturers or importers). As mentioned above, CPSC staff estimates that there are approximately 2.4 million cribs sold to households annually. Of these, approximately 293,000 are non-full-size cribs.

Five firms that supply non-full-size cribs to the U.S. market provide cribs that have been certified by JPMA as complying with the ASTM voluntary standard. Additionally, two firms claim compliance although their products have not been certified by JPMA. Therefore, including the firms that claim compliance with the ASTM standard, five manufacturers, one importer, and one of the firms with an unknown source of supply, have products that are ASTM compliant. It is assumed throughout this summary that firms that are certified or claim to be compliant with earlier versions of the ASTM standard will remain compliant with ASTM F 406–10.

As explained in the analysis concerning full-size cribs (section I.1.a of this preamble), CPSC staff estimates annual sales of all cribs to households to be about 2.4 million cribs. CPSC staff estimates that there are approximately 81 non-full-size crib models currently being supplied (versus 591 full-size crib models). Therefore, approximately 12 percent of the crib models on the U.S. market are non-full-sized. Applying this to the number of cribs sold annually, yields a rough estimate of 293,000 non-full-size cribs sold annually.

In addition to manufacturers and importers of new non-full-size cribs, section 104 of the CPSIA explicitly applies to retailers of both new and used non-full-size cribs, as well as child care facilities and places of public accommodation, such as hotels that supply non-full-size cribs for use by their patrons. The number of firms that may be selling or providing new or used non-full-size cribs to the public is unknown, but would be drawn from approximately 24,985 retail firms (at least 5,292 of which sell used products), 59,555 firms supplying day care services, and 43,303 firms providing public accommodation.

b. Compliance Requirements of the Proposal for Non-Full-Size Cribs

The proposed standard for non-full-size cribs would adopt the requirements of ASTM F 406–10 with certain modifications. The proposed standard would add the following requirements: (1) Mattress support system cyclic impact test (as in ASTM F 1169–10); (2) side impact test (as in ASTM F 1169–10); (3) movable side latch tests (as in previous versions of ASTM F 406); and (4) a specific order for the structural tests (as in ASTM F 1169–10). The proposed standard would apply only to non-full-size cribs, and not to play yards.

To address known hazards associated with mattress support hardware and structural integrity, CPSC staff recommends modifying the mattress support performance requirement to match the one that is being included in the 2010 ASTM standard for full-size cribs. CPSC staff believes that many firms will need to modify their non-full-size cribs (both compliant and non-compliant) in order to meet this proposed requirement. For most, this would require a stronger mattress support system, perhaps using additional or thicker materials. The cost of this modification is unknown, but unlikely to represent a significant proportion of the end product price. Alternatively, it is possible that some firms may choose to redesign their product to meet this requirement.

The side impact test will harmonize the requirement in the non-full-size crib standard with that in the full-size crib standard. CPSC staff does not believe that many firms will need to modify their products to comply with this requirement. In fact, the incidence of failure may be lower under ASTM F 1169–10, due to new requirements that will require that crib hardware include a locking device or other method to impede loosening. Any changes that may be required would most likely entail better/stronger attachments of slats to the bottom rails (*e.g.,* more glue or added staples). Therefore, this requirement is not expected to impose a significant burden upon firms, given the relatively low cost of the required modifications. However, it is possible that some firms may choose to redesign their products to address this requirement.

Reinserting the movable side latch tests is considered important, given that it was unintentionally removed from ASTM F 406–10. However, it is unlikely that firms previously compliant with ASTM F 406 made modifications to their products in order to cease to comply with a superseded requirement. Therefore, CPSC staff assumes that any supplier of ASTM compliant non-full-size cribs will already meet this requirement. In fact, CPSC staff does not believe that there are currently any non-full-size cribs on the market that will require modifications to meet this standard. However, if a firm's non-full-size cribs do not comply, they would most likely require stronger, more effective latching mechanisms. These types of modifications tend to be inexpensive and do not require product redesign.

It is possible that specifying the order of testing could have an impact on the test results. To date, however, CPSC staff has not identified any products that fail testing due to test order. In fact, CPSC staff believes that once products meet the 2010 ASTM standard and the additional requirements of the proposed rule, that most suppliers will be able to comply without making any product modifications. Therefore, CPSC staff believes that the impact of this proposed modification will be small. Should modifications be required to comply, however, product redesign seems likely.

c. Impact of the Proposal Concerning Non-Full-Size Cribs on Small Business

There are approximately 17 firms currently known to be producing or importing non-full-size cribs in the United States. Under SBA guidelines, a manufacturer of non-full-size cribs is small if it has 500 or fewer employees and an importer is considered small if it has 100 or fewer employees. Based on these guidelines, 14 are small firms—consisting of 9 domestic manufacturers and 5 importers. The size of the remaining firms—two with unknown supply sources and one domestic manufacturer—could not be determined. There are also probably

additional unknown small manufacturers and importers operating in the U.S. market.

According to the SBA, retailers and services such as day care centers and public accommodations are considered small if they have $7 million or less in annual receipts. Approximately 93 percent of retailers have receipts of less than $5 million, with an additional 3 percent having receipts between $5 million and $9.99 million. Excluding firms with receipts between $5 million and $7 million yields an estimate of 23,236 small retail firms that may potentially be affected by the proposed standard. However, it is important to note that only a small percentage of these small firms actually sell non-full-size cribs. Thus, the number of small retail firms affected will be much smaller than 23,236. Among day care service and accommodation providers, approximately 98 percent have receipts of less than $5 million with an additional 0.9 percent having receipts between $5 million and $9.99 million. This suggests that there are roughly 58,364 small day care firms (of 59,555) and 42,437 small hotel firms (of 43,303) that could be affected.

i. Impact on Small Manufacturers

The impact of the proposed standard on small manufacturers will differ based on whether their non-full-size cribs are expected to comply with ASTM F 406–10. Of the nine small domestic manufacturers, five are in compliance with the voluntary standard. The impact on the five compliant firms is not expected to be significant. While it is possible that some manufacturers might opt to redesign their product(s) to meet the proposed requirements, it is more likely that they will make a few minor changes (such as different hardware or stronger materials for the mattress support system). None of the expected modifications are expected to impact manufacturers' costs significantly, or to significantly increase the price paid by consumers.

The proposed standard could have a significant impact on one or more of the four firms that are not complying with the ASTM standard, as their products might require substantial modifications. The costs associated with these modifications could include product design, development and marketing staff time, and product testing. There may also be increased production costs, particularly if additional materials are required. The actual cost of such an effort is unknown, but could be significant, especially for the one firm that relies on the production and sale of non-full-size cribs and related products, such as accompanying furniture and bedding. However, the impact of these costs may be mitigated if they are treated as new product expenses that can be amortized over time.

The analysis assumes that only those firms that provide cribs that are certified by JPMA or claim ASTM compliance will pass ASTM F 406–10's requirements. This is not necessarily the case. CPSC staff has identified many cases where products not certified by JPMA actually comply with the relevant ASTM standard. To the extent that this is true, the impact of the proposed standard will be less significant than described.

ii. Small Importers of Non-Full-Size Cribs

While four of the five small importers are not compliant with the ASTM standard, all would need to find an alternate source of non-full-size cribs if their existing supplier does not come into compliance with the new requirements of the proposed standard. The cost to importers may increase and they may, in turn, pass some of those increased costs on to consumers. Some importers may respond to the rule by discontinuing the import of their non-complying cribs. However, the impact of such a decision may be mitigated by replacing the non-compliant crib with a complying product or another juvenile product. Deciding to import an alternative product would be a reasonable and realistic way to offset any lost revenue given that most import a variety of products.

iii. Small Retailers, Day Care Centers, and Public Accommodations

The CPSIA requires that all non-full-size cribs sold or leased by retailers or provided by day care centers or public accommodations (*e.g.,* hotels) to their customers comply with the crib standards by the effective date of the final standard.

This means that retailers, most of whom are small, will need to verify that any non-full-size cribs in their inventory and any that they purchase in the future comply with the regulation prior to offering them for sale or lease. CPSC staff believes that most retailers, particularly small retailers, do not keep large inventories of cribs. With an effective date six months after publication of a final rule, retailers of new products should have sufficient time and notification to make this adjustment with little difficulty. The situation for retailers and other suppliers of used cribs, such as day care centers and smaller places of public accommodation, is more complicated, however, because they may not always be able to determine whether the non-full-size cribs they receive are compliant. For the affected parties, it may be simpler to discontinue the sale of used non-full-size cribs. However, if cribs represent a small proportion of the products they sell, the impact on these firms may be limited.

Day care centers will need to replace all of their cribs by the standard's effective date. Since a new ASTM standard (F 406–10) will be published before the final CPSC regulation is published, these firms might not upgrade their existing non-full-size cribs until they are assured that the cribs they purchase will comply with the forthcoming regulation. The impact could be significant on some small day care centers if they had to replace their cribs all at once. However, these are one-time costs that may be passed on to customers over time, which could mitigate, to some extent, the rule's potential burden. Additionally, some centers might opt to replace their non-full-size cribs with play yards, thereby spreading replacement costs over a longer period of time, which would reduce the impact.

Some hotels (or similar places of public accommodation) might keep a few non-full-size cribs available for use by customers. The number at any one establishment is likely to be low, especially given the likelihood of parents with young children traveling with their own sleep products, such as play yards or portable cribs. As with day care centers, this is a one-time cost for firms that can be passed on to customers over time. Firms, particularly smaller firms, might opt to mitigate the costs by ceasing to provide cribs to their customers, or purchasing fewer replacement cribs. Therefore, it is unlikely that there will be a significant impact on a substantial number of firms providing public accommodation.

iv. Alternatives

Under section 104 of the CPSIA, one alternative that would reduce the impact on small entities is to make the voluntary standard mandatory with no modifications. Adopting ASTM F 406–10 without any changes could potentially reduce costs for four of the nine small manufacturers and four of the five small importers who are not already compliant with the voluntary standard. However, these firms will still require substantial product changes in order to meet the voluntary standard. Since the proposed changes add little to the overall burden of the proposed standard, adopting the voluntary standard with no changes will not

significantly offset the burden that is expected for these firms. Additionally, adopting the voluntary standard with no modifications would be unlikely to significantly reduce the impact on small retailers, day care centers, suppliers of public accommodations. The primary effect on these entities (which in most cases should be small) stems from replacing existing inventory with complying cribs. The proposed changes to the voluntary standard should not significantly affect such replacement costs.

The impact on retailers and hotels (or other places of public accommodation) is not expected to be significant, but there could be a significant impact on some small day care firms. One way to reduce this impact would be to set a later effective date. This would allow these firms to spread the cost of non-full-size crib replacement over a longer period of time.

J. Environmental Considerations

The Commission's regulations provide a categorical exclusion for the Commission's rules from any requirement to prepare an environmental assessment or an environmental impact statement as they "have little or no potential for affecting the human environment." 16 CFR 1021.5(c)(2). This proposed rule falls within the categorical exclusion.

K. Paperwork Reduction Act

This proposed rule contains information collection requirements that are subject to public comment and review by the Office of Management and Budget ("OMB") under the Paperwork Reduction Act of 1995 (44 U.S.C. 3501–3520). We describe the provisions in this section of the document with an estimate of the annual reporting burden. Our estimate includes the time for reviewing instructions, searching existing data sources, gathering and maintaining the data needed, and completing and reviewing each collection of information.

We particularly invite comments on: (1) Whether the collection of information is necessary for the proper performance of the CPSC's functions, including whether the information will have practical utility; (2) the accuracy of the CPSC's estimate of the burden of the proposed collection of information, including the validity of the methodology and assumptions used; (3) ways to enhance the quality, utility, and clarity of the information to be collected; and (4) ways to minimize the burden of the collection of information on respondents, including through the use of automated collection techniques, when appropriate, and other forms of information technology.

Full-Size Cribs

Title: Safety Standard for Full-Size Cribs

Description: The proposed rule would require each full-size crib to comply with ASTM F 1169–10, "Standard Consumer Safety Specification for Full-Size Baby Cribs." The proposed standard prescribes performance, design, and labeling requirements for full-size cribs. It would require manufacturers and importers of those products to maintain sales records for a period of six years after the manufacture or importation of full-size cribs. Sections 8 and 9 of ASTM F 1169–10 also contain requirements for marking and instructional literature.

Description of Respondents: Persons who manufacture full-size cribs.

We estimate the burden of this collection of information as follows:

TABLE 1—ESTIMATED ANNUAL REPORTING BURDEN

16 CFR section	Number of respondents	Frequency of responses	Total annual responses	Hours per response	Total burden hours
1219	68	1	[2] 68 (23)	5 (4.5)	443.5

There [2] are no capital costs or operating and maintenance costs associated with this collection of information.

Our estimates are based on the following:

CPSC staff estimates that the recordkeeping required by the proposed standard would take 5 hours per firm for obtaining the information from existing sales and distribution data. The annualized cost for the burden collection of information is approximately $9,401. This estimated cost to respondents is based on 340 hours (68 firms × 5 hours each) multiplied by a cost of $ 27.65 per hour (Bureau of Labor Statistics, total compensation, all workers, goods-producing industries, sales and office, March 2010, Table 9).

The cost to the government (wages and benefits) for 34 hours staff time to review the information (½ hour per firm) is approximately $2,784. Assuming that the employee reviewing the records will be a GS–14 level employee, the average hourly wage rate for a mid-level GS–14 employee in the Washington, DC metropolitan area, effective as of January 2010, is $57.33. This represents 70 percent of total compensation (Bureau of Labor Statistics, March 2010, percentage wages and salaries for all civilian management, professional, and related employees, Table 1). Adding an additional 30 percent for benefits brings average hourly compensation for a mid-range GS–14 employee to $81.89. Thus, 34 hours multiplied against an hourly compensation figure of $81.89 results in an estimated cost to the government of $2,784.26, which we have rounded to $2,784.

Proposed § 1219.2(a) would require each full-size crib to comply with ASTM F 1169–10. Sections 8 and 9 of ASTM F 1169–10 contain requirements for marking and instructional literature that are disclosure requirements, thus falling within the definition of "collections of information" at 5 CFR 1320.3(c).

Section 8.1.2.1 of ASTM F 1169–10 requires that the name and the place of business (city and state) of the manufacturer, distributor, or seller be clearly and legibly marked on each product and its retail package. Section 8.1.2.2 of ASTM F 1169–10 requires that a code mark or other means that identifies the model number, stock number, catalog number, or item number be marked on each crib and its retail carton. In both cases, the information must be placed on both the product and the retail package. There are 68 known firms supplying full-size cribs to the United States market. Forty-five of the 68 firms are known to already produce labels that comply with these sections of the standard, so there would be no additional burden on these firms. The remaining 23 firms are assumed to already use labels on both their products and their packaging, but would need to make some modifications to their existing labels. The estimated time required to make these modifications is about 30 minutes per model. Each of these firms supplies an average of nine

[2] The numbers in parentheses represent additional burdens on some firms that will require label modifications.

different models of full-size cribs, therefore, the estimated burden hours associated with labels is 30 minutes x 23 firms x 9 models per firm = 6,210 minutes or 103.5 annual hours.

The Commission estimates that hourly compensation for the time required to create and update labels is $27.65 (Bureau of Labor Statistics, March 2010, all workers, goods-producing industries, sales and office, Table 9). Therefore, the estimated annual cost associated with the Commission recommended labeling requirements is approximately $2,862 ($27.65 per hour × 103.5 hours = $2,861.78, which we have rounded up to $ 2,862).

Section 9.1 of ASTM F 1169–10 requires instructions to be supplied with the product. Full-size cribs are products that generally require some installation and maintenance, and products sold without such information would not be able to successfully compete with products supplying this information. Under OMB's regulations (5 CFR 1320.3(b)(2)), the time, effort, and financial resources necessary to comply with a collection of information that would be incurred by persons in the "normal course of their activities" are excluded from a burden estimate where an agency demonstrates that the disclosure activities needed to comply are "usual and customary." Therefore, because the CPSC is unaware of full-size cribs that: (a) Generally require some installation, but (b) lack any instructions to the user about such installation, we tentatively estimate that there are no burden hours associated with the instruction requirement in section 9.1 of ASTM F 1169–10 because any burden associated with supplying instructions with a full-size crib would be "usual and customary" and not within the definition of "burden" under OMB's regulations.

Based on this analysis, the requirements of the Commission's proposed standard for full-size cribs would impose a burden to industry of 443.5 hours at a cost of $12,263 annually.

In compliance with the Paperwork Reduction Act of 1995 (44 U.S.C. 3507(d)), we have submitted the information collection requirements of this rule to OMB for review. Interested persons are requested to fax comments regarding information collection by August 23, 2010, to the Office of Information and Regulatory Affairs, OMB (*see* **ADDRESSES**).

Non-Full Size Cribs

Title: Safety Standard for Non-Full-Size Cribs

Description: The proposed rule would require each non-full-size crib to comply with ASTM F 406–10, "Standard Consumer Safety Specification for Non-Full-Size Baby Cribs/Play Yards." The proposed standard prescribes performance, design, and labeling requirements for non-full-size cribs. It would require manufacturers and importers of those products to maintain sales records for a period of six years after the manufacture or importation of non-full-size cribs. Sections 9 and 10 of ASTM F 406–10 also contain requirements for marking and instructional literature.

Description of Respondents: Persons who manufacture non-full-size cribs.

We estimate the burden of this collection of information as follows:

TABLE 2—ESTIMATED ANNUAL REPORTING BURDEN

16 CFR section	Number of respondents	Frequency of responses	Total annual responses	Hours per response	Total burden hours
1220	17	1	[3] 17 (10)	5 (4.5)	130

There are no capital costs or operating and maintenance costs associated with this collection of information.

Our estimates are based on the following:

CPSC staff estimates that the recordkeeping required by the proposed standard would take 5 hours per firm for obtaining the information from existing sales and distribution data. The annualized cost for the burden collection of information is approximately $2,350.25. This estimated cost to respondents is based on 85 hours (17 firms x 5 hours each) multiplied by a cost of $ 27.65 per hour (Bureau of Labor Statistics, total compensation, all workers, goods-producing industries, sales and office, March 2010, Table 9).

The cost to the government (wages and benefits) for 8.5 hours staff time to review the information (½ hour per firm) is approximately $696. Assuming that the employee reviewing the records will be a GS–14 level employee, the average hourly wage rate for a mid-level GS–14 employee in the Washington, DC metropolitan area, effective as of January 2010, is $57.33. This represents 70 percent of total compensation (Bureau of Labor Statistics, March 2010, percentage wages and salaries for all civilian management, professional, and related employees, Table 1). Adding an additional 30 percent for benefits brings average hourly compensation for a mid-range GS–14 employee to $81.89. Thus, 8.5 hours multiplied against an hourly compensation figure of $81.89 results in an estimated cost to the government of $696.07, which we have rounded to $696.

Proposed § 1220.2(a) would require each non-full-size crib to comply with ASTM F 406–10. Sections 9 and 10 of ASTM F 406–10 contain requirements for marking and instructional literature that are disclosure requirements, thus falling within the definition of "collections of information" at 5 CFR 1320.3(c).

Section 9.1.1.1 of ASTM F 406–10 requires that the name and either the place of business (city, state, and mailing address, including zip code) or telephone number, or both of the manufacturer, distributor, or seller be clearly and legibly marked on each product and its retail package. Section 9.1.1.2 of ASTM F 406–10 requires that a code mark or other means that identifies the date (month and year as a minimum) of manufacture be marked on each crib and its retail carton. In both cases, the information must be placed on both the product and the retail package. There are 17 known firms supplying non-full-size cribs to the United States market.

Seven of the 17 firms are known to already produce labels that comply with these sections of the standard, so there would be no additional burden on these firms. The remaining 10 firms are assumed to already use labels on both their products and their packaging, but would need to make some modifications to their existing labels. The estimated time required to make these modifications is 30 minutes per model. Each of these firms supplies an average of nine different models of full-size cribs; therefore, the estimated burden hours associated with labels is 30 minutes × 10 firms × 9 models per firm = 2,700 minutes or 45 annual hours.

[3] The numbers in parentheses represent additional burdens on some firms that will require label modifications.

The Commission estimates that hourly compensation for the time required to create and update labels is $27.65 (Bureau of Labor Statistics, March 2010, all workers, goods-producing industries, sales and office, Table 9). Therefore, the estimated annual cost associated with the Commission recommended labeling requirements is approximately $1,244 ($27.65 per hour × 45 hours = $1,244.25, which we have rounded to $1,244).

Section 10.1 of ASTM F 406–10 requires instructions to be supplied with the product. Non-full-size cribs are products that generally require some installation and maintenance, and products sold without such information would not be able to successfully compete with products supplying this information. Under OMB's regulations (5 CFR 1320.3(b)(2)), the time, effort, and financial resources necessary to comply with a collection of information that would be incurred by persons in the "normal course of their activities" are excluded from a burden estimate where an agency demonstrates that the disclosure activities needed to comply are "usual and customary." Therefore, because the CPSC is unaware of non-full-size cribs that: (a) generally require some installation, but (b) lack any instructions to the user about such installation, we tentatively estimate that there are no burden hours associated with the instruction requirement in section 10.1 of ASTM F 406–10 because any burden associated with supplying instructions with a non-full-size crib would be "usual and customary" and not within the definition of "burden" under OMB's regulations.

Based on this analysis, the requirements of the Commission's proposed standard for non-full-size cribs would impose a burden to industry of 130 hours at a cost of $3,594 annually.

In compliance with the Paperwork Reduction Act of 1995 (44 U.S.C. 3507(d)), we have submitted the information collection requirements of this rule to OMB for review. Interested persons are requested to fax comments regarding information collection by August 23, 2010, to the Office of Information and Regulatory Affairs, OMB (*see* **ADDRESSES**).

L. Preemption

Section 26(a) of the CPSA, 15 U.S.C. 2075(a), provides that where a "consumer product safety standard under [the CPSA]" is in effect and applies to a product, no State or political subdivision of a State may either establish or continue in effect a requirement dealing with the same risk of injury unless the State requirement is identical to the Federal standard. (Section 26(c) of the CPSA also provides that States or political subdivisions of States may apply to the Commission for an exemption from this preemption under certain circumstances.) Section 104(b) of the CPSIA refers to the rules to be issued under that section as "consumer product safety rules," thus implying that the preemptive effect of section 26(a) of the CPSA would apply. Therefore, a rule issued under section 104 of the CPSIA will invoke the preemptive effect of section 26(a) of the CPSA when it becomes effective.

M. Certification

Section 14(a) of the CPSA imposes the requirement that products subject to a consumer product safety rule under the CPSA, or to a similar rule, ban, standard, or regulation under any other act enforced by the Commission, must be certified as complying with all applicable CPSC requirements. 15 U.S.C. 2063(a). Such certification must be based on a test of each product or on a reasonable testing program or, for children's products, on tests on a sufficient number of samples by a third party conformity assessment body accredited by the Commission to test according to the applicable requirements. As discussed in section L of this preamble, section 104(b)(1)(B) of the CPSIA refers to standards issued under that section as "consumer product safety standards." By the same reasoning, such standards also would be subject to section 14 of the CPSA. Therefore, any such standard would be considered to be a consumer product safety rule to which products subject to the rule must be certified.

Because full-size cribs and non-full-size cribs are children's products, they must be tested by a third party conformity assessment body whose accreditation has been accepted by the Commission. In the future, the Commission will issue a notice of requirements to explain how laboratories can become accredited as third party conformity assessment bodies to test to the new safety standards. The Commission previously issued a notice of requirements for accreditation to test to the existing crib standards (16 CFR 1508 and 1509). 73 FR 62965. (Baby cribs also must comply with all other applicable CPSC requirements, such as the lead content requirements of section 101 of the CPSIA, the phthalate content requirements in section 108 of the CPSIA, the tracking label requirement in section 14(a)(5) of the CPSA, and the consumer registration form requirements in section 104 of the CPSIA.)

N. Request for Comments

This NPR begins a rulemaking proceeding under section 104(b) of the CPSIA to issue consumer product safety standards for full-size cribs and non-full-size cribs. All interested persons are invited to submit their comments to the Commission on any aspect of the proposed standards. Comments should be submitted in accordance with the instructions in the **ADDRESSES** section at the beginning of this notice. The Commission is particularly interested in receiving comments on the following issues:

- Whether a 6-month effective date allows sufficient time for firms to come into compliance with the crib standards;
- The size of retailer crib inventories, as well as typical rate of turn-over;
- The number of retailers selling cribs and the relative supply levels of full-size and non-full-size cribs at retail establishments;
- The extent to which some day care centers or places of public accommodation (*e.g.,* hotels) may provide full-size cribs rather than non-full-size cribs;
- The average number of cribs (full-size and/or non-full-size) in day care centers and hotels; and
- The extent to which day care centers and hotels provide play yards (soft side structures) rather than either full-size or non-full-size cribs.

List of Subjects

16 CFR Part 1219

Consumer protection, Incorporation by reference, Imports, Infants and children, Labeling, Law enforcement, and Toys.

16 CFR Part 1220

Consumer protection, Incorporation by reference, Imports, Infants and children, Labeling, Law enforcement, and Toys.

16 CFR Part 1500

Consumer protection, Hazardous substances, Imports, Infants and children, Labeling, Law enforcement, Reporting and recordkeeping, and Toys.

Therefore, the Commission proposes to amend Title 16 CFR chapter II as follows:

1. Add part 1219 to read as follows:

PART 1219—SAFETY STANDARD FOR FULL–SIZE BABY CRIBS

Sec.
1219.1 Scope and definitions.
1219.2 Requirements for full-size baby cribs.

Authority: The Consumer Product Safety Improvement Act of 2008, Pub. Law 110–314, section 104, 122 Stat. 3016 (August 14, 2008).

§ 1219.1 Scope and definitions.

(a) *Scope.* This part establishes a consumer product safety standard for new and used full-size baby cribs and applies to the manufacture, sale, contract for sale or resale, lease, sublet, offer, provision for use, or other placement in the stream of commerce on or after (date 6 months after date of publication of a final rule the **Federal Register**) of a new or used full-size baby crib.

(b) *Definitions.* (1) *Full-size baby crib* means a bed that is:

(i) Designed to provide sleeping accommodations for an infant;

(ii) Intended for use in the home, in a child care facility, or place of public accommodation affecting commerce; and

(iii) Within a range of ± 5.1 cm (± 2 in.) of the following interior dimensions: The interior dimensions shall be 71 ± 1.6 cm (28 ± ⅝ in.) wide as measured between the innermost surfaces of the crib sides and 133 ± 1.6 cm (52 ⅜ ± ⅝ in.) long as measured between the innermost surfaces of the crib end panels, slats, rods, or spindles. Both measurements are to be made at the level of the mattress support spring in each of its adjustable positions and no more than 5 cm (2 in.) from the crib corner posts or from the first spindle to the corresponding point of the first spindle at the other end of the crib. If a crib has contoured or decorative spindles, in either or both of the sides or ends, the measurement shall be determined from the largest diameter of the first turned spindle within a range of 10 cm (4 in.) above the mattress support spring in each of its adjustable positions, to a corresponding point on the first spindle or innermost surface of the opposite side of the crib.

(2) *Place of public accommodation affecting commerce* means any inn, hotel, or other establishment that provides lodging to transient guests, except that such term does not include an establishment treated as an apartment building for purposes of any State or local law or regulation or an establishment located within a building that contains not more than five rooms for rent or hire and that is actually occupied as a residence by the proprietor of such establishment.

§ 1219.2 Requirements for full-size baby cribs.

(a) Except as provided in paragraph (b) of this section, each full-size baby crib shall comply with all applicable provisions of ASTM F 1169–10, Standard Consumer Safety Specification for Full-Size Baby Cribs, approved June 1, 2010. The Director of the Federal Register approves this incorporation by reference in accordance with 5 U.S.C. 552(a) and 1 CFR part 51. You may obtain a copy from ASTM International, 100 Bar Harbor Drive, PO Box 0700, West Conshohocken, PA 19428; telephone 610–832–9585; *http://www.astm.org.* You may inspect a copy at the Office of the Secretary, U.S. Consumer Product Safety Commission, Room 502, 4330 East West Highway, Bethesda, MD 20814, telephone 301–504–7923, or at the National Archives and Records Administration (NARA). For information on the availability of this material at NARA, call 202–741–6030, or go to: *http://www.archives.gov/federal_register/code_of_federal_regulations/ibr_locations.html.*

(b) Comply with the ASTM F 1169–10 standard, except do not comply with section 6.12 of ASTM F 1169–10.

2. Add part 1220 to read as follows:

PART 1220—SAFETY STANDARD FOR NON-FULL-SIZE BABY CRIBS

Sec.
1220.1 Scope and definitions.
1220.2 Requirements for non-full-size baby cribs.

Authority: The Consumer Product Safety Improvement Act of 2008, Pub. Law 110–314, section 104, 122 Stat. 3016 (August 14, 2008).

§ 1220.1 Scope and definitions.

(a) *Scope.* This part establishes a consumer product safety standard for new and used non-full-size baby cribs and applies to the manufacture, sale, contract for sale or resale, lease, sublet, offer, provision for use, or other placement in the stream of commerce on or after (date 6 months after date of publication of a final rule in the **Federal Register**) of a new or used non-full-size baby crib. This part does not apply to play yards.

(b) *Definitions.* (1) *Non-full-size baby crib* means a crib that:

(i) Is intended for use in or around the home, for travel, in a child care facility, in a place of public accommodation affecting commerce and other purposes;

(ii) Has an interior length dimension either greater than 139.7 cm (55 in.) or smaller than 126.3 cm (49¾ in.), or, an interior width dimension either greater than 77.7 cm (30⅝ in.) or smaller than 64.3 cm (25⅜ in.), or both;

(iii) Includes, but is not limited to, the following:

(A) *Portable crib*—non-full-size baby crib designed so that it may be folded or collapsed, without disassembly, to occupy a volume substantially less than the volume it occupies when it is used.

(B) *Crib pen*—a non-full-size baby crib with rigid sides the legs of which may be removed or adjusted to provide a play pen or play yard for a child.

(C) *Specialty crib*—an unconventionally shaped (circular, hexagonal, etc.) non-full-size baby crib incorporating a special mattress or other unconventional components.

(D) *Undersize crib*—non-full-size baby crib with an interior length dimension smaller than 126.3 cm (49¾ in.), or an interior width dimension smaller than 64.3 cm (25⅜ in.), or both.

(E) *Oversize crib*—non-full-size baby crib with an interior length dimension greater than 139.7 cm (55 in.), or an interior width dimension greater than 77.7 cm (30⅝ in.), or both.

(iv) Does not include mesh/net/screen cribs, nonrigidly constructed baby cribs, cradles (both rocker and pendulum types), car beds, baby baskets and bassinets (also known as junior cribs).

(2) *Play yard* means a framed enclosure that includes a floor and has mesh or fabric sided panels primarily intended to provide a play or sleeping environment for children. It may fold for storage or travel.

(3) *Place of public accommodation affecting commerce* means any inn, hotel, or other establishment that provides lodging to transient guests, except that such term does not include an establishment treated as an apartment building for purposes of any State or local law or regulation or an establishment located within a building that contains not more than five rooms for rent or hire and that is actually occupied as a residence by the proprietor of such establishment.

§ 1220.2 Requirements for non-full-size baby cribs.

(a) Except as provided in paragraph (b) of this section, each non-full-size baby crib shall comply with all applicable provisions of ASTM F 406–10, Standard Consumer Safety Specification for Non-Full-Size Baby Cribs, approved June 1, 2010. The Director of the Federal Register approves this incorporation by reference in accordance with 5 U.S.C. 552(a) and 1 CFR part 51. You may obtain a copy from ASTM International, 100 Bar Harbor Drive, PO Box 0700, West Conshohocken, PA 19428; telephone 610–832–9585; *http://www.astm.org.* You may inspect a copy at the Office of

the Secretary, U.S. Consumer Product Safety Commission, Room 502, 4330 East West Highway, Bethesda, MD 20814, telephone 301–504–7923, or at the National Archives and Records Administration (NARA). For information on the availability of this material at NARA, call 202–741–6030, or go to: *http://www.archives.gov/federal_register/code_of_federal_regulations/ibr_locations.html.*

(b) Comply with the ASTM F 406–10 standard with the following additions or exclusions:

(1) Do not comply with section 5.16.2 of ASTM F 406–10.

(2) In addition to complying with section 5.18 of ASTM F 406–10, comply with the following:

(i) 5.19 The manufacturer or importer shall keep and maintain for 6 years after production or importation of each lot or other identifying unit of rigid non-full-size baby cribs, records of sale and distribution. These records shall be made available upon request at reasonable times to any officer, employee, or agent acting on behalf of the Consumer Product Safety Commission. The manufacturer or importer shall permit such officer, employee, or agent to inspect and copy such records, to make such inventories of stock as he or she deems necessary, and to otherwise verify the accuracy of such records.

(ii) [Reserved]

(3) Instead of complying with section 6.10.1 through 6.10.1.2 of ASTM F 406–10, comply with the following:

(i) 6.10.1 *Mattress Support System Vertical Impact Test Requirements*—After testing in accordance with the procedure in 8.6, the crib shall comply with all the requirements of section 5. Key structural elements attached by screws shall not have separated by more than 0.04 in. (1.00 mm) upon completion of testing.

(ii) [Reserved]

(4) In addition to complying with section 6.10.2.2 of ASTM F 406–10, comply with the following:

(i) 6.10.2.3 After completion of the cyclic and static portions of the side tests, the crib shall comply with the General Requirements in section 5 and no spindles or slats shall have broken or completely separated from the top or bottom rail. Complete separation shall be determined by placing a right triangular prism shaped wedge (see Figure A1.13) between two spindles or slats adjacent to the rail from which these have separated and applying a 20-lbf (90–N) pull force to the wedge in a direction normal to the plane of the crib side. If a spindle or slat moves away from the hole in the rail in which it was formerly secured, complete separation has occurred.

(ii) 6.10.2.4 Any spindles or slats that could be rotated during the torque test in 8.7.4 shall comply with the spacing of crib components in the Performance Requirements section 6.3.1 when turned to their most adverse position.

(5) In addition to complying with section 6.14 of ASTM F 406–10, comply with the following:

(i) 6.15 *Movable Side Latch Testing:*

(A) 6.15.1 This test consists of horizontally loading the end while a prescribed force is applied to the movable side(s) (see 8.28).

(B) 6.15.2 The latching mechanism shall not disengage during testing and shall continue to function in the intended manner upon completion of the testing.

(ii) 6.16 *Performance Testing Order*— The performance testing requirements of this section shall be performed in the following order:

(A) Teething rail test

(B) Cyclic side shake test

(C) Crib side latch test

(D) Mattress support system vertical impact test

(E) Mattress support system test

(F) Crib side impact test

(G) Spindle/slat strength test

(6) Do not comply with section 7, *Performance Requirements for Mesh/Fabric Products,* of ASTM F 406–10.

(7) Instead of complying with section 8.6 through 8.6.2.6 of ASTM F 406–10, comply with the following:

(i) 8.6 *Mattress Support System Vertical Impact Test:*

(A) 8.6.1 *General*—This test consists of dropping a specified weight repeatedly onto a polyurethane foam pad covered in vinyl supported by the crib mattress support system. The test assists in evaluating the structural integrity of the crib assembly.

(B) 8.6.2 *Apparatus:*

(C) 8.6.2.1 A guided free-fall impacting system machine (which keeps the upper surface of the impact mass parallel to the horizontal surface on which the crib is secured) (see Figure A1.12.).

(D) 8.6.2.2 A 45 lb (20 kg) impact mass (see Figures A and B).

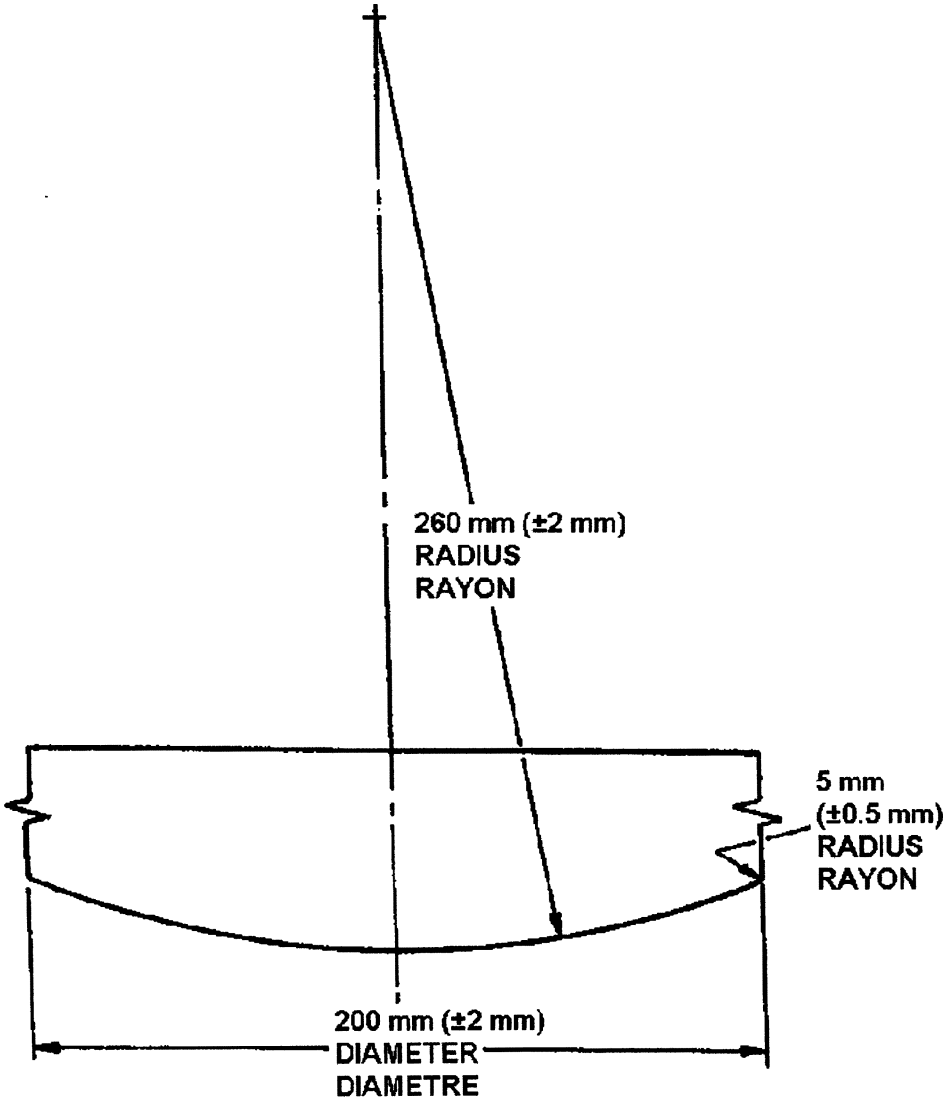

Figure A. Impact Mass Shape

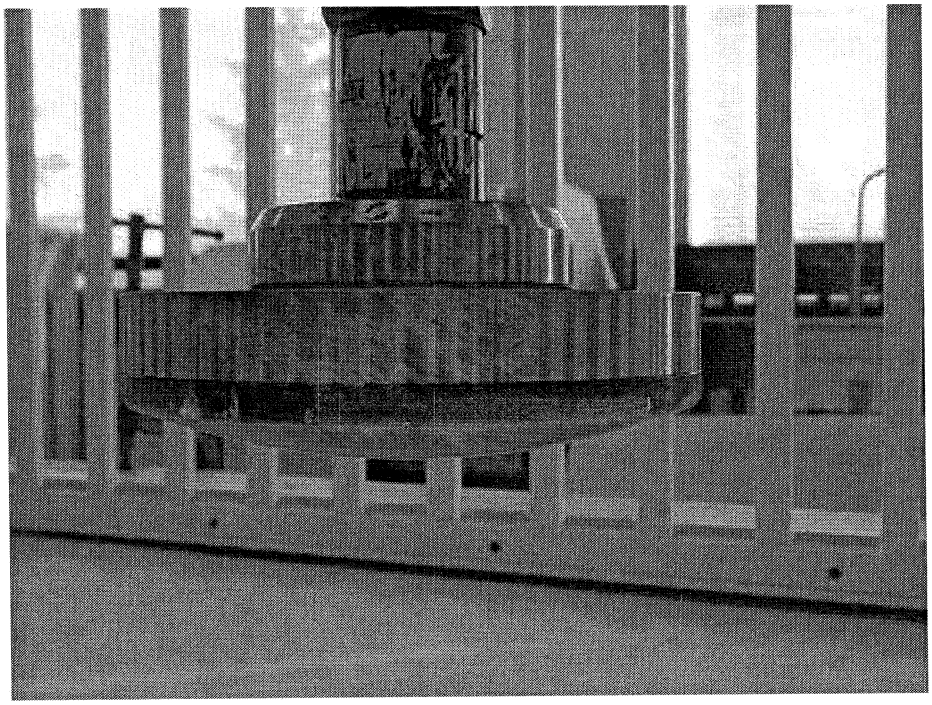

Figure B. Impact Mass

(E) 8.6.2.3 A 6 in. (150 mm) long gauge.

(F) 8.6.2.4 A 2 in. (50 mm) square gauge/spacer block.

(G) 8.6.2.5 A test mattress with a 3 in. (75 mm) thick sheet of polyurethane foam having a density of 1.9 lbs/ft^3 ± 0.4 lbs/ft (30 kg/m^3 ± 6 kg/m^3), a 25% indentation force deflection (IFD) of 32.4 lbs ± 6.7 lbs (144 N ± 30 N) and dimensions that shall not be more than 1 in. (25 mm) shorter and 1 in. (25 mm) narrower than the respective interior dimensions of the product, covered with a tight fitting 8 to 12 gauge vinyl material (tick). The suitability of the test mattress dimensions are to be determined by placing the mattress on the mattress support and pushing it fully over to one side. Measure the gap formed between the mattress and the crib side/end assemblies, which should not be greater than 1 in. (25 mm) in both the length and width.

(H) 8.6.3 *Procedure:*

(I) 8.6.3.1 Adjust the mattress support to its lowest position.

(J) 8.6.3.2 Put the test mattress in place. Do NOT use the mattress supplied with the crib. The same test mattress may be used for testing more than one crib if it meets the requirements of 8.6.2.5.

(K) 8.6.3.3 Secure the product to the horizontal test plane, remove the castors if supplied. Once the test has begun, no attempt shall be made at re-tightening fasteners which may have loosened because of vibration. The test must proceed without any corrective intervention of adjusting the height difference between the drop weight and mattress, until its completion, unless extensive damage, dislodging or deformation occurs during the course of the test, in which case the test shall be terminated.

(L) 8.6.3.4 Position the geometric center of the test mattress below the geometric center of the impact mass.

(M) 8.6.3.5 Adjust the distance between the top surface of the mattress and bottom surface of the impact mass to 6 in. (150 mm) (using the 8.6.2.3 6 in. (150 mm) long gauge) when the impact mass is in its highest position. Lock the impactor mechanism at this height and DO NOT adjust the height during impacting to compensate for any change in distance due to the mattress compressing or the mattress support deforming or moving during impacting.

(N) 8.6.3.6 Allow the 45 lb (20.0 kg) impact mass to fall freely 150 times at the rate of one impact every 4 seconds. Load retraction shall not begin until at least 2 seconds after the start of the drop.

(O) 8.6.3.7 Repeat step 8.6.3.6 at each corner of the mattress support, with the center of the impact mass 6 in. (150 mm) from the two sides forming the corners of the crib. To position the mass for a standard rectangular shaped crib place a 2 in. (50 mm) spacer block against one of the sides of the corner to be tested and move the impact mass until it touches the spacer block (see Figure C). Repeat this process for the other side that makes up the corner to be tested (see Figure D).

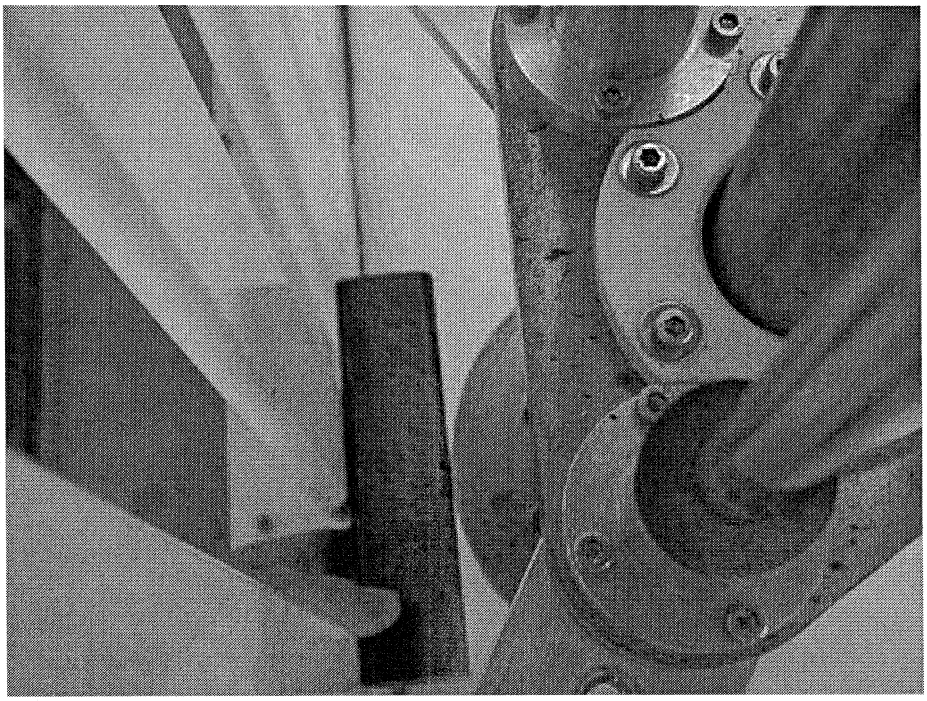

Figure C. Spacer Block (top view).

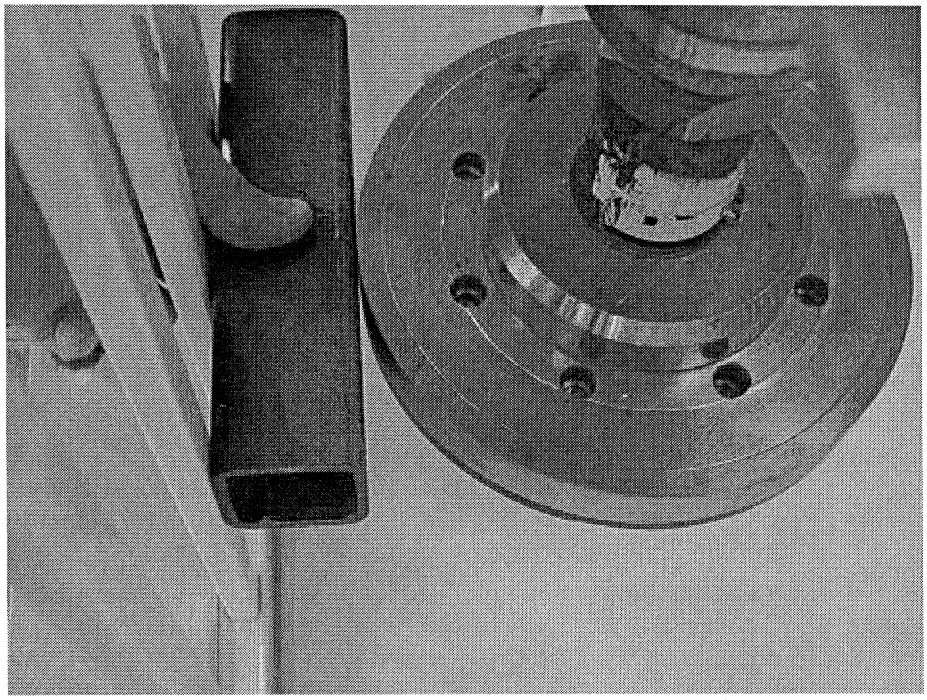

Figure D. Impact Mass and Spacer Block.

(ii) [Reserved]

(8) Instead of complying with 8.7.1.1(2) of ASTM F 406–10, comply with the following:

(i) 8.7.1.1(2) Impactor with contact dimensions of 1.5 by 1 in. (38 by 25 mm) and a weight of 30 lb (13.6 kg) with the 1 in. (25 mm) positioned perpendicular to the length of the frame.

(ii) [Reserved]

(9) Instead of complying with the first sentence of 8.7.2.3 of ASTM F 406–10, comply with the following:

(i) 8.7.2.3 Allow the impactor to free-fall 3 + ½, −0 in. (76 + 13, −0 mm) 250 times at a rate of 4 ± 1 s per cycle using the impactor contact dimensions specified in 8.7.1.1(2). * * *

(ii) [Reserved]

(10) In addition to complying with section 8.7.3.4 of ASTM F 406–10, comply with the following:

(i) 8.7.4 *Crib Side Spindle/Slat Torque Test:*

(A) 8.7.4.1 Apply a torque of 30 lbf-in. (3.4 N-m) at the midpoint in height of each spindle or slat.

(B) [Reserved]

(ii) [Reserved]

(11) Do not comply with sections 8.11 through 8.11.2.4 of ASTM F 406–10.

(12) Do not comply with sections 8.12 through 8.12.2.2 of ASTM F 406–10.

(13) Do not comply with section 8.14 through 8.14.2 of ASTM F 406–10.

(14) Do not comply with sections 8.15 through 8.15.3.3 of ASTM F 406–10.

(15) Do not comply with sections 8.16 through 8.16.3 of ASTM F 406–10.

(16) In addition to complying with 8.27.3 of ASTM F 406–10, comply with the following:

(i) 8.28 *Movable Side Latch Tests:*

(A) 8.28.1 *Procedure for Movable Side Latch Tests:*

(B) 8.28.1.1 Gradually apply within 5 s a vertically downward force of 60 lbf (270 N) through a hardwood block with 2-by-2-in. (50-by-50-mm) contact area to the upper horizontal rail of the unit side at a point that is 6 in. (150 mm) from one end of the movable side rail. While the 60-lbf (270–N) downward force is applied to the movable side, gradually apply within 5 s a 30-lbf (133–N) horizontal force in a direction parallel to the movable side. The point of application of this force is to be coincident with the horizontal extension of the longitudinal centerline of the movable side and 1 in. (25 mm) down from the top of the unit corner post or unit end panel for construction not incorporating unit corner posts (see Fig. A.1.19). Maintain this horizontal force for an additional 30 s, then reverse its direction and maintain for an additional 30 s.

(C) 8.28.1.2 Repeat this procedure at the other end of the unit's movable side and, if the unit has more than one movable side, perform the test at each end of each movable side.

(D) 8.28.1.3 Upon completion of the test, release the movable side latch and operate the movable side. Then raise the side and observe whether the latch automatically engages in the manner intended by the manufacturer.

(ii) [Reserved]

(17) Do not comply with section 9.3.2 through 9.3.2.4 of ASTM F 406–10.

PART 1500—HAZARDOUS SUBSTANCES AND ARTICLES; ADMINISTRATION AND ENFORCEMENT REGULATIONS

3. The authority citation for part 1500 continues to read as follows:

Authority: 15 U.S.C. 1261–1278, 122 Stat. 3016.

4. Revise § 1500.18(a)(13) and (14) to read as follows:

§ 1500.18 Banned toys and other banned articles intended for use by children.

(a) * * *

(13) Any full-size baby crib that is manufactured, sold, contracted to sell or resell, leased, sublet, offered, provided for use, or otherwise placed in the stream of commerce on or after (six months after publication of final rule in the **Federal Register**) and that does not comply with the requirements of part 1219 of this chapter.

(14) Any non-full-size baby crib that is manufactured, sold, contracted to sell or resell, leased, sublet, offered, provided for use, or otherwise placed in the stream of commerce on or after (six months after publication of final rule in the **Federal Register**) and that does not comply with the requirements of part 1220 of this chapter.

* * * * *

Dated: July 14, 2010.

Todd A. Stevenson,

Secretary, U.S. Consumer Product Safety Commission.

[FR Doc. 2010–17594 Filed 7–22–10; 8:45 am]

BILLING CODE 6355–01–P

Federal Register

Friday,
July 23, 2010

Part IV

Department of the Treasury

Internal Revenue Service

26 CFR Parts 54 and 602

Department of Labor

Employee Benefits Security Administration

29 CFR Part 2590

Department of Health and Human Services

45 CFR Part 147

Interim Final Rules for Group Health Plans and Health Insurance Issuers Relating to Internal Claims and Appeals and External Review Processes Under the Patient Protection and Affordable Care Act; Interim Final Rule

DEPARTMENT OF THE TREASURY

Internal Revenue Service

26 CFR Parts 54 and 602

[TD 9494]

RIN 1545–BJ63

DEPARTMENT OF LABOR

Employee Benefits Security Administration

29 CFR Part 2590

RIN 1210–AB45

DEPARTMENT OF HEALTH AND HUMAN SERVICES

[OCIIO–9993–IFC]

45 CFR Part 147

RIN 0991–AB70

Interim Final Rules for Group Health Plans and Health Insurance Issuers Relating to Internal Claims and Appeals and External Review Processes Under the Patient Protection and Affordable Care Act

AGENCY: Internal Revenue Service, Department of the Treasury; Employee Benefits Security Administration, Department of Labor; Office of Consumer Information and Insurance Oversight, Department of Health and Human Services.

ACTION: Interim final rules with request for comments.

SUMMARY: This document contains interim final regulations implementing the requirements regarding internal claims and appeals and external review processes for group health plans and health insurance coverage in the group and individual markets under the Patient Protection and Affordable Care Act. The regulations will generally affect health insurance issuers; group health plans; and participants, beneficiaries, and enrollees in health insurance coverage and in group health plans. The regulations provide plans and issuers with guidance necessary to comply with the law.

DATES: *Effective date.* These interim final regulations are effective on September 21, 2010.

Comment date. Comments are due on or before September 21, 2010.

Applicability dates. These interim final regulations generally apply to group health plans and group health insurance issuers for plan years beginning on or after September 23, 2010. These interim final regulations generally apply to individual health insurance issuers for policy years beginning on or after September 23, 2010.

ADDRESSES: Written comments may be submitted to any of the addresses specified below. Any comment that is submitted to any Department will be shared with the other Departments. Please do not submit duplicates.

All comments will be made available to the public. *Warning:* Do not include any personally identifiable information (such as name, address, or other contact information) or confidential business information that you do not want publicly disclosed. All comments are posted on the Internet exactly as received, and can be retrieved by most Internet search engines. No deletions, modifications, or redactions will be made to the comments received, as they are public records. Comments may be submitted anonymously.

Department of Labor. Comments to the Department of Labor, identified by RIN 1210–AB45, by one of the following methods:

- *Federal eRulemaking Portal: http://www.regulations.gov.* Follow the instructions for submitting comments.
- *E-mail: E-OHPSCA2719.EBSA@dol.gov.*
- *Mail or Hand Delivery:* Office of Health Plan Standards and Compliance Assistance, Employee Benefits Security Administration, Room N–5653, U.S. Department of Labor, 200 Constitution Avenue, NW., Washington, DC 20210, *Attention:* RIN 1210—AB45.

Comments received by the Department of Labor will be posted without change to *http://www.regulations.gov* and *http://www.dol.gov/ebsa,* and available for public inspection at the Public Disclosure Room, N–1513, Employee Benefits Security Administration, 200 Constitution Avenue, NW., Washington, DC 20210.

Department of Health and Human Services. In commenting, please refer to file code OCIIO–9993–IFC. Because of staff and resource limitations, we cannot accept comments by facsimile (FAX) transmission.

You may submit comments in one of four ways (please choose only one of the ways listed):

1. *Electronically.* You may submit electronic comments on this regulation to *http://www.regulations.gov.* Follow the instructions under the "More Search Options" tab.

2. *By regular mail.* You may mail written comments to the following address only: Office of Consumer Information and Insurance Oversight, Department of Health and Human Services, Attention: OCIIO–9993–IFC, P.O. Box 8016, Baltimore, MD 21244–1850.

Please allow sufficient time for mailed comments to be received before the close of the comment period.

3. *By express or overnight mail.* You may send written comments to the following address only: Office of Consumer Information and Insurance Oversight, Department of Health and Human Services, Attention: OCIIO–9993–IFC, Mail Stop C4–26–05, 7500 Security Boulevard, Baltimore, MD 21244–1850.

4. *By hand or courier.* If you prefer, you may deliver (by hand or courier) your written comments before the close of the comment period to either of the following addresses:

a. For delivery in Washington, DC—

Office of Consumer Information and Insurance Oversight, Department of Health and Human Services, Room 445–G, Hubert H. Humphrey Building, 200 Independence Avenue, SW., Washington, DC 20201.

(Because access to the interior of the Hubert H. Humphrey Building is not readily available to persons without Federal government identification, commenters are encouraged to leave their comments in the OCIIO drop slots located in the main lobby of the building. A stamp-in clock is available for persons wishing to retain a proof of filing by stamping in and retaining an extra copy of the comments being filed.)

b. For delivery in Baltimore, MD—

Centers for Medicare & Medicaid Services, Department of Health and Human Services, 7500 Security Boulevard, Baltimore, MD 21244–1850.

If you intend to deliver your comments to the Baltimore address, please call (410) 786–7195 in advance to schedule your arrival with one of our staff members.

Comments mailed to the addresses indicated as appropriate for hand or courier delivery may be delayed and received after the comment period.

Submission of comments on paperwork requirements. You may submit comments on this document's paperwork requirements by following the instructions at the end of the "Collection of Information Requirements" section in this document.

Inspection of Public Comments: All comments received before the close of the comment period are available for viewing by the public, including any personally identifiable or confidential business information that is included in

a comment. We post all comments received before the close of the comment period on the following website as soon as possible after they have been received: *http://www.regulations.gov.* Follow the search instructions on that Web site to view public comments.

Comments received timely will also be available for public inspection as they are received, generally beginning approximately three weeks after publication of a document, at the headquarters of the Centers for Medicare & Medicaid Services, 7500 Security Boulevard, Baltimore, Maryland 21244, Monday through Friday of each week from 8:30 a.m. to 4 p.m. EST. To schedule an appointment to view public comments, phone 1–800–743–3951.

Internal Revenue Service. Comments to the IRS, identified by REG–125592–10, by one of the following methods:

- *Federal eRulemaking Portal: http://www.regulations.gov.* Follow the instructions for submitting comments.
- *Mail:* CC:PA:LPD:PR (REG–125592–10), Room 5205, Internal Revenue Service, P.O. Box 7604, Ben Franklin Station, Washington, DC 20044.
- *Hand or courier delivery:* Monday through Friday between the hours of 8 a.m. and 4 p.m. to: CC:PA:LPD:PR (REG–125592–10), Courier's Desk, Internal Revenue Service, 1111 Constitution Avenue, NW., Washington DC 20224.

All submissions to the IRS will be open to public inspection and copying in Room 1621, 1111 Constitution Avenue, NW., Washington, DC from 9 a.m. to 4 p.m.

FOR FURTHER INFORMATION CONTACT: Amy Turner or Beth Baum, Employee Benefits Security Administration, Department of Labor, at (202) 693–8335; Karen Levin, Internal Revenue Service, Department of the Treasury, at (202) 622–6080; Ellen Kuhn, Office of Consumer Information and Insurance Oversight, Department of Health and Human Services, at (301) 492–4100.

Customer Service Information: Individuals interested in obtaining information from the Department of Labor concerning employment-based health coverage laws may call the EBSA Toll-Free Hotline at 1–866–444–EBSA (3272) or visit the Department of Labor's Web site (*http://www.dol.gov/ebsa*). In addition, information from HHS on private health insurance for consumers can be found on the Centers for Medicare & Medicaid Services (CMS) Web site (*http://www.cms.hhs.gov/HealthInsReformforConsume/01_Overview.asp*) and information on health reform can be found at *http://www.healthreform.gov.*

SUPPLEMENTARY INFORMATION:

I. Background

The Patient Protection and Affordable Care Act (the Affordable Care Act), Public Law 111–148, was enacted on March 23, 2010; the Health Care and Education Reconciliation Act (the Reconciliation Act), Public Law 111–152, was enacted on March 30, 2010. The Affordable Care Act and the Reconciliation Act reorganize, amend, and add to the provisions of part A of title XXVII of the Public Health Service Act (PHS Act) relating to group health plans and health insurance issuers in the group and individual markets. The term "group health plan" includes both insured and self-insured group health plans.[1] The Affordable Care Act adds section 715(a)(1) to the Employee Retirement Income Security Act (ERISA) and section 9815(a)(1) to the Internal Revenue Code (the Code) to incorporate the provisions of part A of title XXVII of the PHS Act into ERISA and the Code, and make them applicable to group health plans, and health insurance issuers providing health insurance coverage in connection with group health plans. The PHS Act sections incorporated by this reference are sections 2701 through 2728. PHS Act sections 2701 through 2719A are substantially new, though they incorporate some provisions of prior law. PHS Act sections 2722 through 2728 are sections of prior law renumbered, with some, mostly minor, changes.

Subtitles A and C of title I of the Affordable Care Act amend the requirements of title XXVII of the PHS Act (changes to which are incorporated into ERISA section 715). The preemption provisions of ERISA section 731 and PHS Act section 2724[2] (implemented in 29 CFR 2590.731(a) and 45 CFR 146.143(a)) apply so that the requirements of part 7 of ERISA and title XXVII of the PHS Act, as amended by the Affordable Care Act, are not to be "construed to supersede any provision of State law which establishes, implements, or continues in effect any standard or requirement solely relating to health insurance issuers in connection with group or individual health insurance coverage except to the extent that such standard or requirement prevents the application of a requirement" of the Affordable Care Act. Accordingly, State laws that impose on health insurance issuers requirements that are stricter than those imposed by the Affordable Care Act will not be superseded by the Affordable Care Act.

The Departments of Health and Human Services, Labor, and the Treasury (the Departments) are issuing regulations in several phases implementing the revised PHS Act sections 2701 through 2719A and related provisions of the Affordable Care Act. The first phase in this series was the publication of a Request for Information relating to the medical loss ratio provisions of PHS Act section 2718, published in the **Federal Register** on April 14, 2010 (75 FR 19297). The second phase was interim final regulations implementing PHS Act section 2714 (requiring dependent coverage of children to age 26), published in the **Federal Register** on May 13, 2010 (75 FR 27122). The third phase was interim final regulations implementing section 1251 of the Affordable Care Act (relating to status as a grandfathered health plan), published in the **Federal Register** on June 17, 2010 (75 FR 34538). The fourth phase was interim final regulations implementing PHS Act sections 2704 (prohibiting preexisting condition exclusions), 2711 (regarding lifetime and annual dollar limits on benefits), 2712 (regarding restrictions on rescissions), and 2719A (regarding patient protections), published in the **Federal Register** on June 28, 2010 (75 FR 37188). The fifth phase was interim final regulations implementing PHS Act section 2713 (regarding preventive health services), published in the **Federal Register** on July 19, 2010 (75 FR 41726). These interim final regulations are being published to implement PHS Act section 2719, relating to internal claims and appeals and external review processes. PHS Act section 2719 is generally effective for plan years (in the individual market, policy years) beginning on or after September 23, 2010, which is six months after the March 23, 2010 date of enactment of the Affordable Care Act. The implementation of other provisions of PHS Act sections 2701 through 2719A will be addressed in future regulations.

[1] The term "group health plan" is used in title XXVII of the PHS Act, part 7 of ERISA, and chapter 100 of the Code, and is distinct from the term "health plan," as used in other provisions of title I of the Affordable Care Act. The term "health plan" does not include self-insured group health plans.

[2] Code section 9815 incorporates the preemption provisions of PHS Act section 2724. Prior to the Affordable Care Act, there were no express preemption provisions in chapter 100 of the Code.

II. Overview of the Regulations: PHS Act Section 2719, Internal Claims and Appeals and External Review Processes (26 CFR 54.9815–2719T, 29 CFR 2590.715–27109, 45 CFR 147.136)

a. Scope and Definitions

These interim final regulations set forth rules implementing PHS Act section 2719 for internal claims and appeals and external review processes for group health plans and health insurance coverage; these requirements do not apply to grandfathered health plans under section 1251 of the Affordable Care Act. With respect to internal claims and appeals processes for group health coverage, PHS Act section 2719 provides that plans and issuers must initially incorporate the internal claims and appeals processes set forth in 29 CFR 2560.503–1 and update such processes in accordance with standards established by the Secretary of Labor. Similarly, with respect to internal claims and appeals processes for individual health insurance coverage, issuers must initially incorporate the internal claims and appeals processes set forth in applicable State law and update such processes in accordance with standards established by the Secretary of Health and Human Services. These interim final regulations provide such updated standards for compliance. The Department of Labor is also considering further updates to 29 CFR 2560.503–1 and expects to issue future regulations that will propose additional, more comprehensive updates to the standards for plan internal claims and appeals processes.

With respect to external review, PHS Act section 2719 provides a system for applicability of either a State external review process or a Federal external review process. These regulations provide rules for determining which process applies, as well as guidance regarding each process. Consistent with the statutory structure, these interim final regulations adopt an approach that builds on applicable State external review processes. For plans and issuers subject to existing State external review processes, the regulations include a transition period until July 1, 2011. During this period, the State process applies and the Departments will work individually with States on an ongoing basis to assist in making any necessary changes to incorporate additional consumer protections so that the State process will continue to apply after the end of the transition period. For plans and issuers not subject to an existing State external review process (including self-insured plans), a Federal process will apply for plan years (in the individual market, policy years) beginning on or after September 23, 2010. The Departments will be issuing more guidance in the near future on the Federal external review process.

These interim final regulations also set forth rules related to the form and manner of providing notices in connection with internal claims and appeals and external review processes. The regulations also reiterate and preserve the Departments' authority, pursuant to PHS Act section 2719(c), to deem external review processes in operation on March 23, 2010, to be in compliance with the requirements of PHS Act section 2719, either permanently or temporarily.

Paragraph (a)(2) of 26 CFR 54.9815–2719T, 29 CFR 2590.715–2719, 45 CFR 147.136 sets forth definitions relevant for these interim final regulations, including the definitions of an adverse benefit determination and a final internal adverse benefit determination. An adverse benefit determination is defined by incorporating the definition under the Department of Labor's regulations governing claims procedures at 29 CFR 2560.503–1 (DOL claims procedure regulation), and also includes a rescission of coverage. A final internal adverse benefit determination is the upholding of an adverse benefit determination at the conclusion of the internal appeals process or an adverse benefit determination with respect to which the internal appeals process has been deemed exhausted.

b. Internal Claims and Appeals Process

Paragraph (b) of 26 CFR 54.9815–2719T, 29 CFR 2590.715–2719, 45 CFR 147.136 requires group health plans and health insurance issuers offering group or individual health insurance coverage to implement an effective internal claims and appeals process. The regulations set forth separate rules for group health coverage and individual health insurance coverage.

1. Group Health Plans and Health Insurance Issuers Offering Group Health Insurance Coverage

A group health plan and a health insurance issuer offering group health insurance coverage must comply with all the requirements applicable to group health plans under the DOL claims procedure regulation. Therefore, for purposes of compliance with these interim final regulations, a health insurance issuer offering health insurance coverage in connection with a group health plan is subject to the DOL claims procedure regulation to the same extent as if it were a group health plan.

These interim final regulations also set forth six new requirements in addition to those in the DOL claims procedure regulation.

First, for purposes of these interim final regulations, the definition of an adverse benefit determination is broader than the definition in the DOL claims procedure regulation, in that an adverse benefit determination for purposes of these interim final regulations also includes a rescission of coverage. By referencing the DOL claims procedure regulation, an adverse benefit determination eligible for internal claims and appeals processes under these interim final regulations includes a denial, reduction, or termination of, or a failure to provide or make a payment (in whole or in part) for a benefit, including any such denial, reduction, termination, or failure to provide or make a payment that is based on:

- A determination of an individual's eligibility to participate in a plan or health insurance coverage;
- A determination that a benefit is not a covered benefit;
- The imposition of a preexisting condition exclusion, source-of-injury exclusion, network exclusion, or other limitation on otherwise covered benefits; or
- A determination that a benefit is experimental, investigational, or not medically necessary or appropriate.

A denial, reduction, or termination of, or a failure to provide or make a payment (in whole or in part) for a benefit can include both pre-service claims (for example, a claim resulting from the application of any utilization review), as well as post-service claims. Failure to make a payment in whole or in part includes any instance where a plan pays less than the total amount of expenses submitted with regard to a claim, including a denial of part of the claim due to the terms of a plan or health insurance coverage regarding copayments, deductibles, or other cost-sharing requirements.[3] Under these interim final regulations, an adverse benefit determination also includes any rescission of coverage as defined in the regulations restricting rescissions (26 CFR 54.9815–2712T(a)(2), 29 CFR 2590.715–2712(a)(2), and 45 CFR 147.128(a)(2)), whether or not there is an adverse effect on any particular benefit at that time. The regulations restricting rescissions generally define a rescission as a cancellation or discontinuance of coverage that has

[3] *See* the Department of Labor's Frequently Asked Questions (FAQs) About the Benefit Claims Procedure Regulations, FAQ C–12, at *http://www.dol.gov/ebsa.*

retroactive effect, except to the extent it is attributable to a failure to timely pay required premiums or contributions towards the cost of coverage. Rescissions of coverage must also comply with the requirements of the regulations restricting rescissions.[4]

Second, these interim final regulations provide that a plan or issuer must notify a claimant of a benefit determination (whether adverse or not) with respect to a claim involving urgent care (as defined in the DOL claims procedure regulation)[5] as soon as possible, taking into account the medical exigencies, but not later than 24 hours after the receipt of the claim by the plan or health insurance coverage, unless the claimant fails to provide sufficient information to determine whether, or to what extent, benefits are covered or payable under the plan or health insurance coverage.[6] This is a change from the requirements of the DOL claims procedure regulation, which generally requires a determination not later than 72 hours after receipt of the claim by a group health plan for urgent care claims. The Departments expect that electronic communication will enable faster decision-making today than in the year 2000, when the final DOL claims procedure regulation was issued.

Third, these interim final regulations provide additional criteria to ensure that a claimant receives a full and fair review. Specifically, in addition to complying with the requirements of the DOL claims procedure regulation, the plan or issuer must provide the claimant, free of charge, with any new or additional evidence considered, relied upon, or generated by the plan or issuer (or at the direction of the plan or issuer) in connection with the claim.[7] Such evidence must be provided as soon as possible and sufficiently in advance of the date on which the notice of adverse benefit determination on review is required to be provided to give the claimant a reasonable opportunity to respond prior to that date. Additionally, before the plan or issuer can issue an adverse benefit determination on review based on a new or additional rationale, the claimant must be provided, free of charge, with the rationale. The rationale must be provided as soon as possible and sufficiently in advance of the date on which the notice of adverse benefit determination on review is required to be provided to give the claimant a reasonable opportunity to respond prior to that date.

Fourth, these interim final regulations provide new criteria with respect to avoiding conflicts of interest. The plan or issuer must ensure that all claims and appeals are adjudicated in a manner designed to ensure the independence and impartiality of the persons involved in making the decision. Accordingly, decisions regarding hiring, compensation, termination, promotion, or other similar matters with respect to any individual (such as a claims adjudicator or medical expert) must not be made based upon the likelihood that the individual will support a denial of benefits. For example, a plan or issuer cannot provide bonuses based on the number of denials made by a claims adjudicator. Similarly, a plan or issuer cannot contract with a medical expert based on the expert's reputation for outcomes in contested cases, rather than based on the expert's professional qualifications.

Fifth, these interim final regulations provide new standards regarding notice to enrollees. Specifically, the statute and these interim final regulations require a plan or issuer to provide notice to enrollees, in a culturally and linguistically appropriate manner (standards for which are described later in this preamble). Plans and issuers must comply with the requirements of paragraphs (g) and (j) of the DOL claims procedure regulation, which detail requirements regarding the issuance of a notice of adverse benefit determination.[8] Moreover, for purposes of these interim final regulations, additional content requirements apply for these notices. A plan or issuer must ensure that any notice of adverse benefit determination or final internal adverse benefit determination includes information sufficient to identify the claim involved. This includes the date of service, the health care provider, and the claim amount (if applicable)[9], as well as the diagnosis code (such as an ICD–9 code, ICD–10 code, or DSM–IV code)[10], the treatment code (such as a CPT code)[11], and the corresponding meanings of these codes. A plan or issuer must also ensure that the reason or reasons for the adverse benefit determination or final internal adverse benefit determination includes the denial code (such as a CARC and RARC)[12] and its corresponding meaning. It must also include a description of the plan's or issuer's standard, if any, that was used in denying the claim (for example, if a plan applies a medical necessity standard in denying a claim, the notice must include a description of the medical necessity standard). In the case of a notice of final internal adverse benefit determination, this description must include a discussion of the decision. Additionally, the plan or issuer must provide a description of available internal appeals and external review processes, including information regarding how to initiate an appeal. Finally, the plan or issuer must disclose the availability of, and contact information for, any applicable office of health insurance consumer assistance or ombudsman established under PHS Act section 2793 to assist enrollees with the

[4] These regulations generally provide that a plan or issuer must not rescind coverage with respect to an individual once the individual is covered, except in the case of an act, practice, or omission that constitutes fraud, or an intentional misrepresentation of material fact, as prohibited by the terms of the plan or coverage.

[5] Under the DOL claims procedure regulation, a "claim involving urgent care" is a claim for medical care or treatment with respect to which the application of the time periods for making non-urgent care determinations could seriously jeopardize the life or health of the claimant or the ability of the claimant to regain maximum function; or, in the opinion of a physician with knowledge of the claimant's medical condition, would subject the claimant to severe pain that cannot be adequately managed without the care or treatment that is the subject of the claim.

[6] In the case of a failure to provide sufficient information, under the DOL claims procedure regulation the claimant must be notified as soon as possible, but not later than 24 hours after receipt of the claim, of the specific information necessary to complete the claim. The claimant must be afforded a reasonable amount of time, taking into account the circumstances, but not less than 48 hours, to provide the specified information.

[7] This language underscores and is not inconsistent with the scope of the disclosure requirement under the existing Department of Labor claims procedure regulation. That is, the Department of Labor interprets 29 USC 1133 and the DOL claims procedure regulation as already requiring that plans provide claimants with new or additional evidence or rationales upon request and an opportunity to respond in certain circumstances. *See* Brief of amicus curiae Secretary of the United States Department of Labor, *Midgett* v. *Washington Group International Long Term Disability Plan,* 561 F.3d 887 (8th Cir. 2009) (No.08–2523) (expressing disagreement with cases holding that there is no such requirement).

[8] Paragraph (g) of the DOL claims procedure regulation requires that the notice must be written in a manner calculated to be understood by the claimant and generally must include any specific reasons for the adverse determination, reference to the specific provision on which the determination is based, a description of any additional information required to perfect the claim, and a description of the internal appeal process. Paragraph (i) of the DOL claims procedure regulation requires that the notice must also be provided in accordance with specified timeframes for urgent care claims, pre-service claims, and post-service claims.

[9] The amount of the claim may not be knowable or available at the time, such as in a case of preauthorization, or there may be no specific claim, such as in a case of rescission.

[10] ICD–9 and ICD–10 codes refer to the International Classification of Diseases, 9th revision and 10th revision, respectively. The DSM–IV codes refer to the Diagnostic and Statistical Manual of Mental Disorders, Fourth Edition.

[11] CPT refers to Current Procedural Terminology.

[12] CARC refers to Claim Adjustment Reason Code and RARC refers to Remittance Advice Remark Code.

internal claims and appeals and external review processes. The Departments intend to issue model notices that could be used to satisfy all the notice requirements under these interim final regulations in the very near future. These notices will be made available at *http://www.dol.gov/ebsa* and *http://www.hhs.gov/ociio/.*

Sixth, these interim final regulations provide that, in the case of a plan or issuer that fails to strictly adhere to all the requirements of the internal claims and appeals process with respect to a claim, the claimant is deemed to have exhausted the internal claims and appeals process, regardless of whether the plan or issuer asserts that it substantially complied with these requirements or that any error it committed was de minimis. Accordingly, upon such a failure, the claimant may initiate an external review and pursue any available remedies under applicable law, such as judicial review.

In addition to the six new requirements, the statute and these interim final regulations require a plan and issuer to provide continued coverage pending the outcome of an internal appeal. For this purpose, the plan or issuer must comply with the requirements of the DOL claims procedure regulation, which, as applied under these interim final regulations, generally prohibits a plan or issuer from reducing or terminating an ongoing course of treatment without providing advance notice and an opportunity for advance review. Additionally, individuals in urgent care situations and individuals receiving an ongoing course of treatment may be allowed to proceed with expedited external review at the same time as the internal appeals process, under either a State external review process or the Federal external review process, in accordance with the Uniform Health Carrier External Review Model Act promulgated by the National Association of Insurance Commissioners (NAIC Uniform Model Act). The provision of the NAIC Uniform Model Act requiring simultaneous internal appeals and external review is discussed later in this preamble.

2. Health Insurance Issuers Offering Individual Health Insurance Coverage

The statute requires the Secretary of Health and Human Services to set forth processes for internal claims and appeals in the individual market. Under these interim final regulations, the Secretary of Health and Human Services has determined that a health insurance issuer offering individual health insurance coverage must generally comply with all the requirements for the internal claims and appeals process that apply to group health coverage.[13] The process and protections of the group health coverage standards are also pertinent to the individual health insurance market. Furthermore, many issuers in the individual market also provide coverage in the group market. To facilitate compliance, it is preferable to have similar processes in the group and individual markets. Accordingly, an individual health insurance issuer is subject to the DOL claims procedure regulation as if the issuer were a group health plan. Moreover, an individual health insurance issuer must also comply with the additional standards in these interim final regulations imposed on group health insurance coverage.

To address certain relevant differences in the group and individual markets, health insurance issuers offering individual health insurance coverage must comply with three additional requirements. First, these interim final regulations expand the scope of the group health coverage internal claims and appeals process to cover initial eligibility determinations for individual health insurance coverage. This protection is important because eligibility determinations in the individual market are frequently based on the health status of the applicant, including preexisting conditions. With the prohibition against preexisting condition exclusions taking effect for policy years beginning on or after September 23, 2010 for children under 19 and for all others for policy years beginning on or after January 1, 2014, applicants in the individual market should have the opportunity for a review of a denial of eligibility of coverage to determine whether the issuer is complying with the new provisions in making the determination.

Second, although the DOL claims procedure regulation permits plans to have a second level of internal appeals, these interim final regulations require that health insurance issuers offering individual health insurance coverage have only one level of internal appeals. This allows the claimant to seek either external review or judicial review immediately after an adverse benefit determination is upheld in the first level of the internal appeals process. There is no need for a second level of an internal appeal in the individual market since the issuer conducts all levels of the internal appeal, unlike in the group market, where a third party administrator may conduct the first level of the internal appeal and the employer may conduct a second level of the internal appeal. Accordingly, after an issuer has reviewed an adverse benefit determination once, the claimant should be allowed to seek external review of the determination by an outside entity.

Finally, these interim final regulations require health insurance issuers offering individual health insurance coverage to maintain records of all claims and notices associated with their internal claims and appeals processes. The records must be maintained for at least six years, which is the same requirement for group health plans under the ERISA recordkeeping requirements. An issuer must make such records available for examination upon request. Accordingly, a claimant or State or Federal agency official generally would be able to request and receive such documents free of charge. Other Federal and State law regarding disclosure of personally identifiable health information may apply, including the HIPAA privacy rule.[14]

c. State Standards for External Review

The statute and these interim final regulations provide that plans and issuers must comply with either a State external review process or the Federal external review process. These interim final regulations provide a basis for determining when plans and issuers must comply with an applicable State external review process and when they must comply with the Federal external review process.

For health insurance coverage, if a State external review process that applies to and is binding on an issuer includes, at a minimum, the consumer protections in the NAIC Uniform Model Act in place on July 23, 2010,[15] then the issuer must comply with the applicable State external review process and not with the Federal external review process. In such a case, to the extent that benefits under a group health plan are provided through health insurance

[13] The special rules in the DOL claims procedure regulation applicable only to multiemployer plans (generally defined in section 3(37) of ERISA as plans maintained pursuant to one or more collective bargaining agreements for the employees of two or more employers) do not apply to health insurance issuers in the individual market.

[14] *See* 45 CFR 164.500 *et seq.*

[15] These interim final regulations specify that the relevant NAIC Uniform Model Act is the version in place on the date these interim final regulations are published. If the NAIC Uniform Model Act is later modified, the Departments will review the changes and determine to what extent any additional requirements will be incorporated into the minimum standards for State external review processes by amending these regulations. This version of the NAIC Uniform Model Act is available at *http://www.dol.gov/ebsa* and *http://www.hhs.gov/ociio/.*

coverage, the issuer is required to satisfy the obligation to provide an external review process, so the plan itself is not required to comply with either the State external review process or the Federal external review process. The Departments encourage States to establish external review processes that meet the minimum consumer protections of the NAIC Uniform Model Act. The Departments prefer having States take the lead role in regulating health insurance issuers, with Federal enforcement only as a fallback measure.

These interim final regulations do not preclude a State external review process from applying to and being binding on a self-insured group health plan under some circumstances. While the preemption provisions of ERISA ordinarily would prevent a State external review process from applying directly to an ERISA plan, ERISA preemption does not prevent a State external review process from applying to some self-insured plans, such as nonfederal governmental plans and church plans not covered by ERISA preemption, and multiple employer welfare arrangements, which can be subject to both ERISA and State insurance laws. A State external review process could apply to such plans if the process includes, at a minimum, the consumer protections in the NAIC Uniform Model Act.

Under these interim final regulations, any plan or issuer not subject to a State external review process must comply with the Federal external review process. (However, to the extent a plan provides health insurance coverage that is subject to an applicable State external review process that provides the minimum consumer protections in the NAIC Uniform Model Act, the plan does not have to comply with the Federal external review process.) A plan or issuer is subject to the Federal external review process where the State external review process does not meet, at a minimum, the consumer protections in the NAIC Uniform Model Act, as well as where there is no applicable State external review process.

For a State external review process to apply instead of the Federal external review process, the Affordable Care Act provides that the State external review process must include, at a minimum, the consumer protections of the NAIC Uniform Model Act. Accordingly, the Departments have determined that the following elements from the NAIC Uniform Model Act are the minimum consumer protections that must be included for a State external review process to apply. The State process must:

- Provide for the external review of adverse benefit determinations (and final internal adverse benefit determinations) that are based on medical necessity, appropriateness, health care setting, level of care, or effectiveness of a covered benefit.
- Require issuers to provide effective written notice to claimants of their rights in connection with an external review for an adverse benefit determination.
- To the extent the State process requires exhaustion of an internal claims and appeals process, make exhaustion unnecessary if: the issuer has waived the exhaustion requirement, the claimant has exhausted (or is considered to have exhausted) the internal claims and appeals process under applicable law, or the claimant has applied for expedited external review at the same time as applying for an expedited internal appeal.
- Provide that the issuer against which a request for external review is filed must pay the cost of an independent review organization (IRO) for conducting the external review. While having the issuer pay the cost of the IRO's review is reflected in the NAIC Uniform Model Act, if the State pays this cost, the Departments would treat the State process as meeting this requirement; this alternative is just as protective to the consumer because the cost of the review is not imposed on the consumer. Notwithstanding this requirement that the issuer (or State) must pay the cost of the IRO's review, the State process may require a nominal filing fee from the claimant requesting an external review. For this purpose, to be considered nominal, a filing fee must not exceed $25, it must be refunded to the claimant if the adverse benefit determination is reversed through external review, it must be waived if payment of the fee would impose an undue financial hardship, and the annual limit on filing fees for any claimant within a single year must not exceed $75.
- Not impose a restriction on the minimum dollar amount of a claim for it to be eligible for external review (for example, a $500 minimum claims threshold).
- Allow at least four months after the receipt of a notice of an adverse benefit determination or final internal adverse benefit determination for a request for an external review to be filed.
- Provide that an IRO will be assigned on a random basis or another method of assignment that assures the independence and impartiality of the assignment process (for example, rotational assignment) by a State or independent entity, and in no event selected by the issuer, plan, or individual.
- Provide for maintenance of a list of approved IROs qualified to conduct the review based on the nature of the health care service that is the subject of the review. The State process must provide for approval only of IROs that are accredited by a nationally recognized private accrediting organization.
- Provide that any approved IRO has no conflicts of interest that will influence its independence.
- Allow the claimant to submit to the IRO in writing additional information that the IRO must consider when conducting the external review and require that the claimant is notified of such right to do so. The process must also require that any additional information submitted by the claimant to the IRO must be forwarded to the issuer within one business day of receipt by the IRO.
- Provide that the decision is binding on the plan or issuer, as well as the claimant, except to the extent that other remedies are available under State or Federal law.
- Provide that, for standard external review, within no more than 45 days after the receipt of the request for external review by the IRO, the IRO must provide written notice to the issuer and the claimant of its decision to uphold or reverse the adverse benefit determination.
- Provide for an expedited external review in certain circumstances and, in such cases, the State process must provide notice of the decision as expeditiously as possible, but not later than 72 hours after the receipt of the request.
- Require that issuers include a description of the external review process in the summary plan description, policy, certificate, membership booklet, outline of coverage, or other evidence of coverage it provides to claimants, substantially similar to what is set forth in section 17 of the NAIC Uniform Model Act.
- Require that IROs maintain written records and make them available upon request to the State, substantially similar to what is set forth in section 15 of the NAIC Uniform Model Act.
- Follow procedures for external review of adverse benefit determinations involving experimental or investigational treatment, substantially similar to what is set forth in section 10 of the NAIC Uniform Model Act.

The Departments invite comments on this list of minimum consumer

protections and whether other elements of the NAIC Uniform Model Act should be included in the list.

The Department of Health and Human Services will determine whether a State external review process meets these requirements (and thus whether issuers (and, if applicable, plans) subject to the State external review process must comply with the State external review process rather than the Federal external review process). A transition period will be provided, however, during which existing State external review processes may be treated as satisfying these requirements.

Under PHS Act section 2719, if a State external review process does not provide the minimum consumer protections of the NAIC Uniform Model Act, health insurance issuers in the State must implement the Federal external review process. The Departments' initial review of existing State external review processes indicates that not all State external review processes provide the minimum consumer protections of the NAIC Uniform Model Act. Under PHS Act section 2719(c), the Departments are provided with discretion to consider an external review process in place on the date of enactment of the Affordable Care Act to be in compliance with the external review requirement under section 2719(b) "as determined appropriate." In order to allow States time to amend their laws to meet or go beyond the minimum consumer protections of the NAIC Uniform Model Act set forth in these interim final regulations, the Departments are using their authority under PHS Act section 2719(c) to treat existing State external review processes as meeting the minimum standards during a transition period for plan years (in the individual market, policy years) beginning before July 1, 2011.

Thus, for plan or policy years beginning before July 1, 2011, a health insurance issuer subject to an existing State external review process must comply with that State external review process and not the Federal external review process. The applicable external review process for plan or policy years beginning on or after July 1, 2011 depends on the type of coverage and whether the State external review process has been determined by the Department of Health and Human Services to satisfy the minimum standards of the NAIC Uniform Model Act.

The applicable external review process for any particular claim is based on the external review process applicable to the plan or issuer at the time a final internal adverse benefit determination (or, in the case of simultaneous internal appeals and external review, the adverse benefit determination) is provided. For this purpose, the final internal adverse benefit determination includes a deemed final internal adverse benefit determination in which the internal claims and appeals process is exhausted because of the failure by the plan or issuer to comply with the requirements of the internal claims and appeals process. Thus, for an issuer with a calendar year plan year in a State in which the State external review process fails to meet the minimum standards, external review of final internal adverse benefit determinations provided prior to the first day of the first calendar year on or after July 1, 2011 (that is, January 1, 2012) must comply with the State external review process, while external reviews of final internal adverse benefit determinations provided on or after January 1, 2012 must meet the alternative Federal external review requirements.

An additional provision of the NAIC Uniform Model Act not addressed in the interim final regulations is the required scope of an applicable State external review process. The NAIC Uniform Model Act applies to all issuers in a State. The Departments' initial review of existing State external review processes indicates that some States do not apply the State external review process to all issuers in the State. For example, some State external review processes only apply to HMOs and do not apply to other types of health coverage. The Departments believe that State external review processes are more effective, and thus more protective, where the external review process is market-wide and available to all claimants with insured coverage. As States with external review processes decide whether to enact legislation amending their laws to provide the consumer protections that would satisfy the requirements of these interim final regulations, the Departments encourage States to establish external review processes that are available for all insured health coverage. This is consistent with the Departments general approach of having States take a lead role in providing consumer protections, with Federal enforcement only as a fallback measure.

That said, these interim final regulations do not set a specific standard for availability of the State external review process that is considered to meet the minimum consumer protections of the NAIC Uniform Model Act. If it is determined that market-wide application of the State external review process is required, plans and issuers would be subject to the Federal external review process in States that do not apply the State external review process to all issuers in the State. Alternatively, if it is determined that universal availability is not required, those plans and issuers that are not subject to the State external review process would be, as are self-insured plans, subject to the Federal external review process. The Departments seek comments whether the Federal external review process should apply to all plans and issuers in a State if the State external review process does not apply to all issuers in the State. After reviewing the comments, the Departments expect to issue future guidance addressing the issue.

d. Federal External Review Process

PHS Act section 2719(b)(2) requires the Departments to establish standards, "through guidance," governing an external review process that is similar to the State external appeals process that meets the standards in these regulations. These interim final regulations set forth the scope of claims eligible for review under the Federal external review process. Specifically, under the Federal external review process, the terms "adverse benefit determination" and "final internal adverse benefit determination" are defined the same as they are for purposes of internal claims and appeals (and, thus, include rescissions of coverage). However, an adverse benefit determination or final internal adverse benefit determination that relates to a participant's or beneficiary's failure to meet the requirements for eligibility under the terms of a group health plan (i.e., worker classification and similar issues) is not within the scope of the Federal external review process.

These interim final regulations set forth the standards that would apply to claimants, plans, and issuers under this Federal external review process, and the substantive standards that would be applied under this process. They also reflect the statutory requirement that the process established through guidance from the Departments be similar to a State external review process that complies with the standards in these regulations. They also provide that the Federal external review process, like the State external review process, will provide for expedited external review and additional consumer protections with respect to external review for claims involving experimental or investigational treatment. The

Departments will address in sub-regulatory guidance how non-grandfathered self-insured group health plans that currently maintain an internal appeals process that otherwise meets the Federal external review standards may comply or be brought into compliance with the requirements of the new Federal external review process.

e. Culturally and Linguistically Appropriate

The statute and these interim final regulations require that notices of available internal claims and appeals and external review processes be provided in a culturally and linguistically appropriate manner. Plans and issuers are considered to provide relevant notices in a culturally and linguistically appropriate manner if notices are provided in a non-English language as described these interim final regulations.[16] Under these interim final regulations, the requirement to provide notices in a non-English language is based on thresholds of the number of people who are literate in the same non-English language. In the group market, the threshold differs depending on the number of participants in the plan. For a plan that covers fewer than 100 participants at the beginning of a plan year, the threshold is 25 percent of all plan participants being literate only in the same non-English language. For a plan that covers 100 or more participants at the beginning of a plan year, the threshold is the lesser of 500 participants, or 10 percent of all plan participants, being literate only in the same non-English language. The thresholds are adapted from the Department of Labor's regulations regarding style and format for a summary plan description, at 29 CFR 2520.102–2(c). In the individual market, the threshold is 10 percent of the population residing in the county being literate only in the same non-English language.[17] The Department of Health and Human Services will publish guidance that issuers may consult to establish these county level estimates on its Web site at *http://www.hhs.gov/ociio/* by September 23, 2010. The Department of Health and Human Services welcomes comments on whether the threshold should remain 10 percent and whether it should continue to be applied on a county-by-county basis.

If an applicable threshold is met, notice must be provided upon request in the non-English language with respect to which the threshold is met. In addition, the plan or issuer must also include a statement in the English versions of all notices, prominently displayed in the non-English language, offering the provision of such notices in the non-English language. Once a request has been made by a claimant, the plan or issuer must provide all subsequent notices to a claimant in the non-English language. In addition, to the extent the plan or issuer maintains a customer assistance process (such as a telephone hotline) that answers questions or provides assistance with filing claims and appeals, the plan or issuer must provide such assistance in the non-English language.

f. Secretarial Authority

The statute provides the Departments with the authority to deem an external review process of a group health plan or health insurance issuer, in operation as of March 23, 2010, to be in compliance with PHS Act section 2719. These interim final regulations provide the Departments may determine that the external review process of a plan or issuer, in operation as of March 23, 2010, is considered in compliance with a State external review process or the Federal external review process, as applicable.

g. Applicability Date

The requirements to implement effective internal and external claims and appeals processes apply for plan years (in the individual market, policy years) beginning on or after September 23, 2010. The statute and these interim final regulations do not apply to grandfathered health plans. *See* 26 CFR 54.9815–1251T, 29 CFR 2590.715–1251, and 45 CFR 147.140 (75 FR 34538, June 17, 2010).

III. Interim Final Regulations and Request for Comments

Section 9833 of the Code, section 734 of ERISA, and section 2792 of the PHS Act authorize the Secretaries of the Treasury, Labor, and HHS (collectively, the Secretaries) to promulgate any interim final rules that they determine are appropriate to carry out the provisions of chapter 100 of the Code, part 7 of subtitle B of title I of ERISA, and part A of title XXVII of the PHS Act, which include PHS Act sections 2701 through 2728 and the incorporation of those sections into ERISA section 715 and Code section 9815.

In addition, under Section 553(b) of the Administrative Procedure Act (APA) (5 U.S.C. 551 *et seq.*) a general notice of proposed rulemaking is not required when an agency, for good cause, finds that notice and public comment thereon are impracticable, unnecessary, or contrary to the public interest. The provisions of the APA that ordinarily require a notice of proposed rulemaking do not apply here because of the specific authority granted by section 9833 of the Code, section 734 of ERISA, and section 2792 of the PHS Act. However, even if the APA were applicable, the Secretaries have determined that it would be impracticable and contrary to the public interest to delay putting the provisions in these interim final regulations in place until a full public notice and comment process was completed. As noted above, the internal claims and appeals and external review provisions of the Affordable Care Act are applicable for plan years (in the individual market, policy years) beginning on or after September 23, 2010, six months after date of enactment. Had the Departments published a notice of proposed rulemaking, provided for a 60-day comment period, and only then prepared final regulations, which would be subject to a 60-day delay in effective date, it is unlikely that it would have been possible to have final regulations in effect before late September, when these requirements could be in effect for some plans or policies. Moreover, the requirements in these interim final regulations require significant lead time in order to implement. These interim final regulations require plans and issuers to provide internal claims and appeals and external review processes and to notify participants, beneficiaries, and enrollees of their rights to such processes. Plans and issuers will presumably need to amend current internal claims and appeals procedures, adopt new external review processes, and notify participants, beneficiaries, and enrollees of these changes before they go into effect. Moreover, group health plans and health insurance issuers subject to these provisions will have to take these changes into account in establishing their premiums, and in making other changes to the designs of plan or policy benefits. In some cases,

[16] For internal claims involving urgent care (for which the claim is generally made by a health care provider), where paragraph (g) of the DOL claims procedure regulation permits an initial oral notice of determination must be made within 24 hours and follow-up in written or electronic notification within 3 days of the oral notification, it may not be reasonable, practicable, or appropriate to provide notice in a non-English language within 24 hours. In such situations, the requirement to provide notice in a culturally and linguistically appropriate manner is satisfied if the initial notice is provided in English and the follow-up notice is provided in the appropriate non-English language.

[17] The county-by-county approach is generally adapted from the approach used under the Medicare Advantage program.

issuers will need time to secure approval for these changes in advance of the plan or policy year in question.

Accordingly, in order to allow plans and health insurance coverage to be designed and implemented on a timely basis, regulations must be published and available to the public well in advance of the effective date of the requirements of the Affordable Care Act. It is not possible to have a full notice and comment process and to publish final regulations in the brief time between enactment of the Affordable Care Act and the date regulations are needed.

The Secretaries further find that issuance of proposed regulations would not be sufficient because the provisions of the Affordable Care Act protect significant rights of plan participants and beneficiaries and individuals covered by individual health insurance policies and it is essential that participants, beneficiaries, insureds, plan sponsors, and issuers have certainty about their rights and responsibilities. Proposed regulations are not binding and cannot provide the necessary certainty. By contrast, the interim final regulations provide the public with an opportunity for comment, but without delaying the effective date of the regulations.

For the foregoing reasons, the Departments have determined that it is impracticable and contrary to the public interest to engage in full notice and comment rulemaking before putting these interim final regulations into effect, and that it is in the public interest to promulgate interim final regulations.

IV. Economic Impact and Paperwork Burden

A. Summary—Department of Labor and Department of Health and Human Services

As stated earlier in this preamble, these interim final regulations implement PHS Act section 2719, which sets forth rules with respect to internal claims and appeals and external appeals processes for group health plans and health insurance issuers that are not grandfathered health plans.[18] This provision generally is effective for plan years (in the individual market, policy years) beginning on or after September 23, 2010, which is six months after the March 23, 2010 date of enactment of the Affordable Care Act.

The Departments have crafted these interim final regulations to secure the protections intended by Congress in the most economically efficient manner possible. In accordance with OMB Circular A–4, the Departments have quantified the benefits and costs where possible and provided a qualitative discussion of some of the benefits and costs that may stem from these interim final regulations.

B. Executive Order 12866—Department of Labor and Department of Health and Human Services

Under Executive Order 12866 (58 FR 51735), "significant" regulatory actions are subject to review by the Office of Management and Budget (OMB). Section 3(f) of the Executive Order defines a "significant regulatory action" as an action that is likely to result in a rule (1) Having an annual effect on the economy of $100 million or more in any one year, or adversely and materially affecting a sector of the economy, productivity, competition, jobs, the environment, public health or safety, or State, local or tribal governments or communities (also referred to as "economically significant"); (2) creating a serious inconsistency or otherwise interfering with an action taken or planned by another agency; (3) materially altering the budgetary impacts of entitlement grants, user fees, or loan programs or the rights and obligations of recipients thereof; or (4) raising novel legal or policy issues arising out of legal mandates, the President's priorities, or the principles set forth in the Executive Order. OMB has determined that this rule is significant within the meaning of section 3(f)(1) of the Executive Order, because it is likely to have an effect on the economy of $100 million in any one year. Accordingly, OMB has reviewed these rules pursuant to the Executive Order. The Departments provide an assessment of the potential costs and benefits of each regulatory provision below, summarized in table 1.

TABLE 1—ACCOUNTING TABLE

Benefits:

Qualitative: A more uniform, rigorous, and consumer friendly system of claims and appeals processing will provide a broad range of direct and indirect benefits that will accrue to varying degrees to all of the affected parties. These interim final regulations could improve the extent to which employee benefit plans provide benefits consistent with the established terms of individual plans. While payment of these benefits will largely constitute transfers, the transfers will be welfare improving, because incorrectly denied benefits will be paid. Greater certainty and consistency in the handling of benefit claims and appeals and improved access to information about the manner in which claims and appeals are adjudicated should lead to efficiency gains in the system, both in terms of the allocation of spending across plans and enrollees as well as operational efficiencies among individual plans. This certainty and consistency can also be expected to benefit, to varying degrees, all parties within the system, particularly consumers, and to lead to broader social welfare gains.

	Estimate	Year dollar	Discount rate	Period covered
Costs:				
Annualized Monetized ($millions/year)	51.2	2010	7%	2011–2013
	51.6	2010	3%	2011–2013

Qualitative: The Departments have quantified the primary source of costs associated with these interim final regulations that will be incurred to (i) administer and conduct the internal and external review process, (ii) prepare and distribute required disclosures and notices, and (iii) bring plan and issuers' internal and external claims and appeals procedures into compliance with the new requirements. The Departments also have quantified the start-up costs for issuers in the individual market to bring themselves into compliance.

Reversals:				
Annualized Monetized ($millions/year)	24.4	2010	7%	2011–2013

[18] The Affordable Care Act adds Section 715 to the Employee Retirement Income Security Act (ERISA) and section 9815 to the Internal Revenue Code (the Code) to make the provisions of part A of title XXVII of the PHS Act applicable to group health plans, and health insurance issuers providing health insurance coverage in connection with group health plans, under ERISA and the Code as if those provisions of the PHS Act were included in ERISA and the Code.

	Estimate	Year dollar	Discount rate	Period covered
	24.7	2010	3%	2011–2013

Qualitative: The Departments estimated the dollar amount of claim denials reversed in the external review process. While this amount is a cost to plans, it represents a payment of benefits that should have previously been paid to participants, but was denied. Part of this amount is a transfer from plans and issuers to those now receiving payment for denied benefits. These transfers will improve equity, because incorrectly denied benefits will be paid. Part of the amount could also be a cost if the reversal leads to services and hence resources being utilized now that had been denied previously. The Departments are not able to distinguish between the two types, but believe that most reversals are associated with a transfer.

1. Need for Regulatory Action

Before the enactment of the Affordable Care Act, health plan sponsors and issuers were not uniformly required to implement claims and appeals processes. For example, ERISA-covered group health plan sponsors were required to implement internal claims and appeal processes that complied with the DOL claims procedure regulation,[19] while group health plans that were not covered by ERISA, such as plans sponsored by State and local governments were not. Health insurance issuers offering coverage in the individual insurance market were required to comply with various applicable State internal appeals laws but were not required to comply with the DOL claims procedure regulation.

With respect to external appeal processes, before the enactment of the Affordable Care Act, sponsors of fully-insured ERISA-covered group health plans, fully-insured State and local governmental plans, and fully-insured church plans were required to comply with State external review laws, while self-insured ERISA-covered group health plans were not subject to such laws due to ERISA preemption.[20] In the individual health insurance market, issuers in States with external review laws were required to comply with such laws. However, uniform external review standards did not apply, because State external review laws vary from State-to-State. Moreover, at least six States did not have external review laws when the Affordable Care Act was enacted; therefore, issuers in those States were not required to implement an external review process.

Under this regulatory system, inconsistent claims and appeals processes applied to plan sponsors and issuers and a patchwork of consumer protections were provided to participants, beneficiaries, and enrollees. The applicable processes and protections depended on several factors including whether (i) Plans were subject to ERISA, (ii) benefits were self-funded or financed by the purchase of an insurance policy, (iii) issuers were subject to State internal claims and appeals laws, and (iv) issuers were subject to State external review laws, and if so, the scope of such laws (such as, whether the laws only apply to one segment of the health insurance market, *e.g.,* managed care or HMO coverage). These uneven protections created an appearance of unfairness, increased cost for issuers and plans operating in multiple States, and may have led to confusion among consumers about their rights.

Congress enacted new PHS Act section 2719 to ensure that plans and issuers implemented more uniform internal and external claims and appeals processes and to set a minimum standard of consumer protections that are available to participants, beneficiaries, and enrollees. These interim final regulations are necessary to provide rules that plan sponsors and issuers can use to implement effective internal and external claims and appeals processes that meet the requirements of new PHS Act section 2719.

2. PHS Act Section 2719—Claims and Appeals Process (26 CFR 54.9815–2719T, 29 CFR 2590.715–2719, 45 CFR 147.136)

a. Summary

As discussed earlier in this preamble, section 1001 of the Affordable Care Act adds new PHS Act section 2719, which requires all non-grandfathered group health plans and health insurance issuers offering group or individual health coverage to implement uniform internal claims and appeals and external appeals processes. Under PHS Act section 2719 and these interim final regulations, all sponsors of non-grandfathered group health plans and health insurance issuers offering group or individual health insurance coverage must comply with all requirements of the DOL claims procedures regulation[21] as well as the new standards that are established by the Secretary of Labor and the Secretary of Health and Human Services in paragraphs (b)(2) and (b)(3) of these interim final regulations.

On the external appeals side, all group health plans or health insurance issuers offering group or individual health insurance coverage that are not grandfathered must comply with an applicable State external review process that, at a minimum, includes the consumer protections set forth in the Uniform Heath Carrier External Review Model Act promulgated by the National Association of Insurance Commissioners (the "NAIC Uniform Model Act") and is binding on the plan or issuer. If the State has not established an external review process that meets the requirements of the NAIC Uniform Model Act or a plan is not subject to State insurance regulation, (including a State law that establishes an external review process) because it is a self-insured plan, the plan or issuer must comply with the requirements of a Federal external review process set forth in paragraph (d) of these interim final regulations.

b. Estimated Number of Affected Entities

For purposes of the new requirements in the Affordable Care Act that apply to group health plans and health insurance issuers in the group and individual markets, the Departments have defined a large group health plan as an employer plan with 100 or more workers and a small group plan as an employer plan with fewer than 100 workers. The Departments make the following estimates about plans and issuers affected by these interim final regulations: (1) There are approximately 72,000 large and 2.8 million small ERISA-covered group health plans with

[19] 29 CFR 2560.503–1.

[20] To the extent that the ERISA preemption provisions do not prevent a State external review process from applying to a self-insured plan (for example, for self-insured nonfederal governmental plans, self-insured church plans, and self-insured multiple employer welfare arrangements) the State could make its external review process applicable to them. The Departments are unaware of the number of these plans that are subject to State external review laws.

[21] Please note that under these interim final regulations, the individual health insurance market is not required to comply with the requirements of the Department of Labor's claims and appeals procedure regulation that apply to multiemployer plans.

an estimated 97.0 million participants in large group plans and 40.9 million participants in small group plans;[22] (2) there are 126,000 governmental plans with 36.1 million participants in large plans and 2.3 million participants in small plans;[23] and (3) there are 16.7 million individuals under age 65 covered by individual health insurance policies.[24]

As described in the Departments' interim final regulations relating to status as a grandfathered health plan,[25] the Affordable Care Act preserves the ability of individuals to retain coverage under a group health plan or health insurance coverage in which the individual was enrolled on March 23, 2010 (a grandfathered health plan). Group health plans and individual health insurance coverage that are grandfathered health plans do not have to meet the requirements of these interim final regulations. Therefore, only plans and issuers offering group and individual health insurance coverage that are not grandfathered health plans will be affected by these interim final regulations.

Plans can choose to make certain disqualifying changes and relinquish their grandfather status.[26] The Affordable Care Act provides plans with the ability to maintain grandfathered status in order to promote stability for consumers while allowing plans and sponsors to make reasonable adjustments to lower costs and encourage the efficient use of services. Based on an analysis of the changes plans have made over the past few years, the Departments expect that more plans will choose to make these changes over time and therefore the number of grandfathered health plans is expected to decrease. Correspondingly, the number of plans and policies affected by these interim final regulations is likely to increase over time. In addition, the number of individuals receiving the full benefits of the Affordable Care Act is likely to increase over time. The Departments estimate that 18 percent of large employer plans and 30 percent of small employer plans would relinquish grandfather status in 2011, increasing over time to 45 percent and 66 percent respectively by 2013, although there is substantial uncertainty surrounding these estimates.[27] The Departments also estimate that in 2011, roughly 31 million people will be enrolled in group health plans subject to PHS Act section 2719 and these interim final regulations, growing to approximately 78 million in 2013.[28]

In the individual market, one study estimated that 40 percent to 67 percent of individual policies terminate each year.[29] Because newly purchased individual policies are not grandfathered, the Departments expect that a large proportion of individual policies will not be grandfathered, covering up to and perhaps exceeding 10 million individuals.

Not all potentially affected individuals will be affected equally by these interim final regulations. As stated in the Need for Regulatory Action section above, sponsors of ERISA-covered group health plans were required to implement an internal appeals process that complied with the DOL claims procedure regulation before the Affordable Care Act's enactment, and the Departments also understand that many non-Federal governmental plans and church plans that are not subject to ERISA nonetheless implement internal claims and appeals processes that comply with the DOL claims procedure regulation.[30] Therefore, participants and beneficiaries covered by such plans only will be affected by the new internal claims and appeals standards that are provided by the Secretary of Labor in paragraph (b)(2)(ii) of these interim final regulations.

These interim final regulations will have the largest impact on individuals covered in the individual health insurance market, because as discussed earlier in this preamble, for the first time, these issuers will be required to comply with the DOL claims procedure regulation for internal claims and appeals as well as the additional standards added by the Secretary of the Department of Health and Human Services in paragraph (b)(3) of these interim final regulations that are in some cases more protective than the ERISA standard.[31]

On the external appeals side, before the enactment of the Affordable Care Act, issuers offering coverage in the group and individual health insurance market already were required to comply with State external review laws. At that time, all States except Alabama, Mississippi, Nebraska, North Dakota, South Dakota, and Wyoming had external review laws, and thirteen States had external review laws that apply only to certain market segments (for example, managed care or HMOs). Therefore, the extent to which enrollees covered by policies issued by these issuers will be affected by these interim final regulations depends on whether the applicable State external review law complies with the minimum consumer protections set forth in the NAIC Uniform Model Act, because if it does not, the policies will become subject to the Federal external review process that applies to self-insured plans that are not subject to State regulation[32] and plans

[22] All participant counts and the estimates of individual policies are from the U.S. Department of Labor, EBSA calculations using the March 2009 Current Population Survey Annual Social and Economic Supplement and the 2008 Medical Expenditure Panel Survey.

[23] Estimate is from the 2007 Census of Government.

[24] U.S. Census Bureau, Current Population Survey, March 2009.

[25] 75 FR 34538 (June 17, 2010).

[26] *See* 75 FR 34538 (June 17, 2010).

[27] *See* 75 FR 34538 (June 17, 2010) for a detailed description of the derivation of the estimates for the percentages of grandfathered health plans. In brief, the Departments used data from the 2008 and 2009 Kaiser Family Foundations/Health Research and Educational Trust survey of employers to estimate the proportion of plans that made changes in cost-sharing requirements that would have caused them to relinquish grandfather status if those same changes were made in 2011, and then applied a set of assumptions about how employer behavior might change in response to the incentives created by the grandfather regulations to estimate the proportion of plans likely to relinquish grandfather status. The estimates of changes in 2012 and 2013 were calculated by using the 2011 calculations and assuming that an identical percentage of plan sponsors will relinquish grandfather status in each year.

[28] To estimate the number of individuals covered in grandfathered health plans, the Departments extended the analysis described in 75 FR 34538, and estimated a weighted average of the number of employees in grandfathered health plans in the large employer and small employer markets separately, weighting by the number of employees in each employer's plan. Estimates for the large employer and small employer markets were then combined, using the estimates supplied above that there are 133.1 million covered lives in the large group market, and 43.2 million in the small group market.

[29] Adele M. Kirk. The Individual Insurance Market: A Building Block for Health Care Reform? *Health Care Financing Organization Research Synthesis.* May 2008.

[30] This understanding is based on the Departments' conversations with industry experts. In addition, the Departments understand that ERISA-covered plans, State and local government plans, and non-ERISA covered church plans generally use the same insurance issuers and service providers who apply the ERISA claims and appeals requirements to all types of plans.

[31] To address certain relevant differences in the group and individual markets, health insurance issuers offering individual health insurance coverage must comply with the following three additional requirements: (1) Expand the scope of the claims and appeals process to cover initial eligibility determinations; (2) provide only one level of internal appeal (although the DOL claims procedure regulation permits group health plans to have a second level of internal appeals), which allows claimants to seek either an external appeal or judicial review immediately after an adverse determination is upheld in the first level of internal appeal; and (3) maintain records of all claims and notices associated with their internal claims and appeals processes and make such records available for examination upon request by claimants and Federal or State regulatory officials.

[32] To the extent that the ERISA preemption provisions do not prevent a State external review process from applying to a self-insured plan (for example, for self-insured nonfederal governmental plans, self-insured church plans, and self-insured

and policies in States that do not have external review laws that meet the minimum consumer protections set forth in the NAIC Uniform Model Act.

Individuals participating in ERISA-covered self-insured group health plans will be among those most affected by the external review requirements contained in these interim final regulations, because the preemption provisions of ERISA prevent a State's external review process from applying directly to an ERISA-covered self-insured plan.[33] These plans now will be required to comply with the Federal external review process set forth under paragraph (d) of these interim final regulations.

In summary, the number of affected individuals depends on several factors, including whether (i) a health plan retains its grandfather status, (ii) the plan is subject to ERISA, (iii) benefits provided under the plan are self-funded or financed by the purchase of an insurance policy, (iii) the applicable State has enacted an internal claims and appeals law, and (iv) the applicable State has enacted an external review law, and if so the scope of such law, and (v) the number of new plans and enrollees in such plans.

c. Benefits

In developing these interim final regulations, the Departments closely considered their potential economic effects, including both costs and benefits. Because of data limitations and a lack of effective measures, the Departments did not attempt to quantify expected benefits. Nonetheless, the Departments were able to identify with confidence several of the interim final regulation's major economic benefits.

These interim final regulations will help transform the current, highly variable health claims and appeals process into a more uniform and structured process. As stated in the Need for Regulatory Action above, before the enactment of the Affordable Care Act, inconsistent internal and external claims and appeals standards applied to plan sponsors and issuers, and a patchwork of consumer protections were provided to participants, beneficiaries, and enrollees that depended on several factors including whether (i) Plans were subject to ERISA, (ii) benefits were self-funded or financed by the purchase of an insurance policy, (iii) issuers were subject to State internal claims and appeals laws, and (iv) issuers were subject to State external review laws, and if so, the scope of such laws (such as, whether the laws only apply to one segment of the health insurance market, *e.g.,* managed care or HMO coverage).

A more uniform, rigorous, and consumer friendly system of claims and appeals processing will provide a broad range of direct and indirect benefits that will accrue to varying degrees to all of the affected parties. In general, the Departments expect that these interim final regulations will improve the extent to which employee benefit plans provide benefits consistent with the established terms of individual plans. This will cause some participants to receive benefits that, absent the fuller protections of the regulation, they might otherwise have been incorrectly denied. In other circumstances, expenditures by plans may be reduced as a fuller and fairer system of claims and appeals processing helps facilitate enrollee acceptance of cost management efforts. Greater certainty and consistency in the handling of benefit claims and appeals and improved access to information about the manner in which claims and appeals are adjudicated may lead to efficiency gains in the system, both in terms of the allocation of spending at a macro-economic level as well as operational efficiencies among individual plans. This certainty and consistency can also be expected to benefit, to varying degrees, all parties within the system and to lead to broader social welfare gains, particularly for consumers.

By making claims and appeals processes more uniform, these interim final regulations will increase efficiency in the operation of employee benefit plans and health care delivery as well as health insurance and labor markets. These interim final regulations are expected to increase efficiency by reducing complexity that arises when different market segments are subject to varying claims and appeals standards. Idiosyncratic requirements, time-frames, and procedures for claims processing impose substantial burdens on participants, their representatives, and service providers. By establishing a more uniform and complete set of minimum requirements and consumer protections, these interim final regulations will reduce the complexity of claims and appeals processing requirements, thereby increasing efficiency.

The Departments expect that these interim final regulations also will improve the efficiency of health plans by enhancing their transparency and fostering participants' confidence in their fairness. When information about the terms and conditions under which benefits will be provided is unavailable to enrollees, they could discount the value of benefits to compensate for the perceived risk. The enhanced disclosure and notice requirements of these interim final regulations will help participants, beneficiaries, and enrollees better understand the reasons underlying adverse benefit determinations and their appeal rights.

The Departments believe that excessive delays and inappropriate denials of health benefits are relatively rare. Most claims are approved in a timely fashion. Many claim denials and delays are appropriate given the plan's terms and the circumstances at hand. Nonetheless, to the extent that delays and inappropriate denials occur, substantial harm can be suffered by participants, beneficiaries, and enrollees, which can also lead to an associated loss of confidence in the fairness and benefits of the system. A more timely and complete review process required under these interim final rules regulations should reduce the levels of delay and error in the system and improve health outcomes.

The voluntary nature of the employment-based health benefit system in conjunction with the open and dynamic character of labor markets make explicit as well as implicit negotiations on compensation a key determinant of the prevalence of employee benefits coverage. The prevalence of benefits is therefore largely dependent on the efficacy of this exchange. If workers perceive that there is the potential for inappropriate denial of benefits or handling of appeals, they will discount the value of such benefits to adjust for this risk. This discount drives a wedge in compensation negotiation, limiting its efficiency. With workers unwilling to bear the full cost of the benefit, fewer benefits will be provided. To the extent that workers perceive that these interim final regulations, supported by enforcement authority, reduces the risk of inappropriate denials of benefits, the differential between the employers' costs and workers' willingness to accept wage offsets is minimized.

Effective claims procedures also can improve health care, health plan quality, and insurance market efficiency by serving as a communication channel, providing feedback from participants, beneficiaries, and providers to plans

multiple employer welfare arrangements) the State could make its external review process applicable to such plans if it includes, at a minimum, the consumer protections in the NAIC Uniform Model Act.

[33] While it is possible that some ERISA-covered self-insured plans may have adopted external review procedures as a matter of good business practice, the Departments are uncertain regarding the level to which this has occurred.

about quality issues. Aggrieved claimants are especially likely to disenroll if they do not understand their appeal rights, or if they believe that their plans' claims and appeals procedures will not effectively resolve their difficulties. Unlike appeals, however, disenrollments fail to alert plans to the difficulties that prompted them. More uniform and effective appeals procedures can give participants and beneficiaries an alternative way to respond to difficulties with their plans. Plans in turn can use the information gleaned from the appeals process to improve services.

The Departments also expect that these interim final regulations' higher standard for more uniform internal and external claims appeals adjudication will enhance some insurers' and group health plans' abilities to effectively control costs by limiting access to inappropriate care. Providing a more formally sanctioned framework for internal and external review and consultation on difficult claims facilitates the adoption of cost containment programs by employers who, in the absence of a regulation providing some guidance, may have opted to pay questionable claims rather than risk alienating participants or being deemed to have breached a fiduciary duty.

In summary, the interim final regulations' more uniform standards for handling health benefit claims and appeals will reduce the incidence of excessive delays and inappropriate denials, averting serious, avoidable lapses in health care quality and resultant injuries and losses to participant, beneficiaries and enrollees. They also will enhance enrollees' level of confidence in and satisfaction with their health care benefits and improve plans' awareness of participant, beneficiary, and provider concerns, prompting plan responses that improve health care quality. Finally, by helping to ensure prompt and precise adherence to contract terms and by improving the flow of information between plans and enrollees, the interim final regulations will bolster the efficiency of labor, health care, and insurance markets. The Departments therefore conclude that the economic benefits of these interim final regulations will justify their costs.

d. Costs and Transfers

The Departments have quantified the primary source of costs associated with these interim final regulations that will be incurred to (i) Administer and conduct the internal and external review process, (ii) prepare and distribute required disclosures and notices, and (iii) bring plan and issuers' internal and external claims and appeals procedures into compliance with the new requirements. The Departments also have quantified the start-up costs for issuers in the individual market to bring themselves into compliance and the costs and the transfers associated with the reversal of denied claims during the external review process. These costs and the methodology used to estimate them are discussed below.

i. *Internal Claims and Appeals.* As discussed above, these interim final regulations require all group health plans and issuers offering coverage in the group and individual health insurance market to comply with the DOL claims procedure regulation. The ERISA-covered market, with an estimated 2.8 million plans and 138 million covered participants, already is required to comply with the DOL claims procedure regulation and is far larger than either the non-Federal governmental plan market, with an estimated 126,000 governmental plans and 30 million participants, or the individual market, with 16.7 million participants. As stated in the Estimated Number of Affected Entities section, the Departments understand that many non-Federal governmental plans comply with the DOL claims procedure regulation, because they use the same issuers and service providers as ERISA-covered plans, and these issuers and service providers implement the internal claims and appeals process for plans in both markets. Therefore, for purposes of this regulatory impact analysis, the Departments assume that 90 percent of the claims volume in the non-Federal governmental group health plan market already complies with the DOL claims procedure regulation.[34]

The Departments estimate that 170 issuers offer policies only in the individual market.[35] While the Departments believe that some issuers are subject to applicable state laws governing internal appeals processes, and have evidence that some issuers already comply with the DOL claims procedure regulation, some issuers will have to change their internal claims and appeals processes to comply with these interim final regulations.[36] The Departments estimate that issuers would incur a start-up cost of $3.5 million in the first year to comply with these interim final regulations by revising processes, creating or revising forms, modifying systems, and training personnel. These costs are mitigated by the model notice of initial benefit determination the Departments will be issuing in subregulatory guidance. This notice will not require any data to be provided that cannot be automatically populated by plans and issuers.

ii. *Cost Required to Implement DOL Claims Procedure Regulation Requirements.* The Departments' estimates of the annual costs for plans and issuers to comply with the DOL claims procedure regulation are based on the methodology used for the Paperwork Reduction Act (PRA) hour and cost burden analysis of DOL claims procedure regulation.[37] The Department first estimated the number of individuals covered by non-grandfathered plans using the March 2009 Current Population Survey Annual Social and Economic Supplement and the 2008 Medical Expenditure Panel Survey. Each covered individual was estimated to generate 10.2 claims on average per year,[38] 82 percent of which were filed electronically.[39] The Departments then assumed that 15 percent of these claims were denied.[40] The Departments assume that three percent of these claims were pre-service with the remaining being post-service claims.[41] The number of post-service claims extended was based on the share

[34] The Departments are uncertain regarding the 90 percent compliance rate for State and local government plans. Therefore, to establish a range, the Departments estimated the cost assuming 75 percent State and local governmental plan compliance. Assuming 75 percent compliance, the cost of State and local plan internal review compliance would increase from $2 million to $5 million in 2011, $3.6 million to $9.1 million in 2012, and $5 million to $12.4 million in 2012.

[35] Source: Estimates are from NAIC 2007 financial statements data and the California Department of Managed Healthcare (2009) (*http://wpso.dmhc.ca.gov/hpsearch/viewall.aspx*).

[36] Discussions with the National Association of Insurance Commissioners suggest that three States require issuers in the individual market to follow the NAIC internal grievance appeals model. Eleven States have no set procedures in place, while the rest have varying requirements. Some issuers voluntarily follow the ERISA claims and appeals procedures.

[37] The OMB Control Number for the DOL procedure regulation is 1210–0053. OMB approved the three-year renewal of the Control Number through May 31, 2013, on May 21, 2010.

[38] Research at the time of the Claims Regulation as well as responses to the Claims RFI reported a wide range of claims per participant—between 5 and 18. The Department eventually settled on 10.2.

[39] AHIP, "Update: A Survey of Health Care Claims Receipt and Processing Times, 2009," January 2010.

[40] Health Insurance Association of America (HIAA, which later merged with AHIP) reported a denial rate of 14 percent in "Results from an HIAA Survey on Claims Payment Process," March 2003. These included duplicate claims as well as denied claims that were appeals. RAND reported an increased trend in claim denials in, "Inside the Black Box of Managed Care Decisions," Research Brief, 2004 from 3 percent to between 8 and 10 percent.

[41] The assumption that 3 percent of claims are pre-service is based on comments the Department received in response to the proposed DOL claims procedure regulation in 2000.

of "clean" claims that took more than 30 days to complete processing.[42] The share of denials expected to be appealed, 0.2 percent, was based on a RAND study.[43] The Departments expect half of these appeals to be reversed,[44] and those not reversed were divided between "medical claims" (28.9 percent) and "administrative claims" (71.1 percent).

The Departments attributed costs to notifying individuals of denied claims and processing appeals. Initial denials were assumed to only take a few minutes for a clerical worker to draft and send an adverse benefit determination notice based on the model notice that will be issued by the Departments that does not require any information to be included that cannot be auto-populated. Appealed denials deemed "medical" are assumed to require a physician, with an estimated labor rate of $154.07 to review and was expected to take 4 ½ hours to decide and draft a response, regardless of outcome.[45] Appealed denials deemed "administrative" require a legal professional with an estimated labor rate of $119.03, and a decision and response was expected to take two minutes for a reversal and two hours for a denial.[46] Mailing costs for the notice of adverse determination and notice of decision of internal appeal is estimated at 54 cents a notice for material, printing, and postage costs.

Because ERISA-covered plans already are required to comply with the DOL claims procedure regulation, the Departments did not attribute any cost to these plans to comply with the rule. As stated above, the Departments understand from consulting with industry experts that a substantial majority of State and local government plans also currently comply with the existing DOL claims procedure regulation; therefore, the Departments assumed that only ten percent of the estimated claims of individuals covered by these plans would constitute a new expense. All claims in non-grandfathered plans in the individual market were assumed to bear the full cost of compliance, because these policies are being required to comply with the DOL claims procedure regulation for the first time. Table 2 shows the estimated number of claims.

TABLE 2—ESTIMATED CLAIMS AND APPEALS IN NON-GRANDFATHERED COVERAGE

	2011			2012			2013		
	Private sector ESI	Government sector ESI	Individual market	Private sector ESI	Government sector ESI	Individual market	Private sector ESI	Government sector ESI	Individual market
Total Enrollees (millions)	138.0	39.0	15.1	138.0	39.0	15.1	138.0	39.0	15.1
Non-Grandfathered Enrollees	24.4	6.9	6.0	44.5	12.6	9.7	61.0	17.2	11.8
Total Claims (millions)	248.9	70.4	61.5	453.8	128.3	98.5	622.4	175.9	120.6
Pre-Service:									
Claim Approved	6.3	1.8	1.6	11.6	3.3	2.5	15.9	4.5	3.1
Claim Denied	1.1	0.3	0.3	2.0	0.6	0.4	2.8	0.8	0.5
Post-Service:									
Claims Approved	196.2	55.5	45.2	357.8	101.1	72.3	490.7	138.7	88.6
Claim Denied	36.2	10.2	9.0	66.0	18.7	14.3	90.6	25.6	17.6
Claim Extended	9.0	2.5	5.6	16.4	4.6	8.9	22.5	6.3	10.9
Total Internal Appeals (thousands)	85.4	24.1	52.8	155.7	44.0	84.5	213.6	60.4	103.5
Appeals Upheld	34.2	9.7	21.1	62.3	17.6	33.8	85.4	24.1	41.4
Appeals Denied	51.2	14.5	31.7	93.4	26.4	50.7	128.1	36.2	62.1
Medical subtotal	24.7	7.0	15.3	45.0	12.7	24.4	61.7	17.4	29.9
Appeals Upheld	9.9	2.8	6.1	18.0	5.1	9.8	24.7	7.0	12.0
Appeals Denied	14.8	4.2	9.2	27.0	7.6	14.6	37.0	10.5	17.9
Administrative subtotal	60.7	17.2	37.5	110.7	31.3	60.1	151.8	42.9	73.6
Appeals Upheld	24.3	6.9	15.0	44.3	12.5	24.0	60.7	17.2	29.4
Appeals Denied	36.4	10.3	22.5	66.4	18.8	36.0	91.1	25.8	44.1
Total New External Appeals (thousands)	2.0	0.6	0.2	3.7	1.1	0.3	5.0	1.5	0.4

As shown in Table 3 below, the Departments estimate that the cost of the internal process, including the costs of internal appeals and notice distribution, is $1.5 million in 2011 and rises to $3.8 million in 2013 as the number of non-grandfathered plans increases. The Departments estimate that the cost for the internal review process for the individual market is $28.8 million in 2011 and rises to $56.4 million in 2013.

iii. *Additional Requirements for Group Health Plans.* As discussed earlier in this preamble, paragraph (b)(2)(i) of these interim final regulations imposes additional requirements to the DOL claims procedure regulation that must be satisfied by group health plans and issuers offering group and individual coverage in the individual and group health insurance markets. The Departments believe that the additional requirements have modest costs associated with them, because they merely clarify provisions of the DOL claims procedure regulation. These requirements and their associated costs are discussed below.

Definition of adverse determination. These interim final regulations expand the definition of adverse benefit determination to include rescissions of coverage. While new, the methodology used to estimate the burden for the internal appeals process already captures this burden as most rescissions are associated with a claim and therefore would already be accounted for. The requirement allows for appeal of rescinded coverage that does not have

[42] AHIP, "Update: A Survey of Health Care Claims Receipt and Processing Times, 2009," January 2010.

[43] "Inside the Black Box of Managed Care Decisions," Research Brief, 2004.

[44] The Department based this assumption on the number of appealed Medicare pre-authorization denials. They received comments for the proposed regulation arguing this estimate was either too high or too low and so the Department chose to retain the assumption.

[45] The Department in its initial claims regulation assumed that an expert consultation would cost $500 which translated into roughly 5 hours of a physician's time. EBSA has revised this slightly downward based on the costs reported by IROs to review medical claims.

[46] The Departments' estimates of labor rates include wages, other benefits, and overhead based on the National Occupational Employment Survey (May 2008, Bureau of Labor Statistics) and the Employment Cost Index June 2009, Bureau of Labor Statistics).

an associated claim. While the Departments lack data to estimate the number of rescissions that occur without an associated claim for benefits, the Departments believe this number is small.

Expedited notification of benefit determination involving urgent care. The current DOL claims procedure regulation requires that a plan or issuer provide notification in the case of an urgent care claim as soon as possible taking into account the medical exigencies, but no later than 72 hours after receipt of the claim by the plan. These interim final regulations reduce the time limit to no later than 24 hours after the receipt of the claim by the plan or issuer. The Departments are not able to quantify the costs of this requirement. However, two factors could suggest this requirement does not impose substantial cost. First, the DOL claims procedure regulation requires urgent care notification to be made as soon as possible; therefore, it is likely that some claims currently are handled in less than the 24 hours. In addition, the technological developments that have occurred since the 72 hour standard was issued in the 2000 DOL claims procedure regulation should facilitate faster notification at reduced costs. However, plans and issuers would incur additional cost for urgent care notices that take longer than the required 24 hours to produce. Speeding up the notification process for these determinations might necessitate incurring additional cost to add more employees or find other ways to shorten the timeframe. Additional costs may be associated with this requirement if a shorter timeframe results in claims being denied that would not have been under a 72 hour standard or claims being approved that would have been denied under a longer notification period.

Full and fair review. These interim final regulations require the plan or issuer to provide the claimant, free of charge, with any new or additional evidence relied upon or generated by the plan or issuer and the rationale used for a determination during the appeals process sufficiently in advance of the due date of the response to an adverse benefit determination. This requirement increases the administrative burden on plans and issuers to prepare and deliver the new and additional information to the claimant. The Departments are not aware of data suggesting how often plans rely on new or additional evidence during the appeals process or the volume of materials that are received.

For purposes of this regulatory impact analysis, the Departments assume, as an upper bound, that all appealed claims will involve a reliance on additional evidence. The Departments assume that this requirement will impose a cost of just under $1 million in 2013, the year with the highest cost. The Departments estimated this cost by assuming that it will require medical office staff with a labor rate of $26.85 five minutes [47] to collect and distribute the additional evidence considered, relied on, or generated during the appeals process. The Departments estimate that on average, material, printing and postage costs will be $2.24 per mailing. The Departments further assume that 38 percent of all mailings will be distributed electronically with no associated material, printing or postage costs.[48]

Eliminating conflicts of interest. As discussed earlier in this preamble, these interim final regulations require plans and issuers to ensure that all claims and appeals are adjudicated in a manner designed to ensure the independence and impartiality of the persons involved in making the decision. Accordingly, decisions regarding hiring, compensation, termination, promotion, or other similar matters with respect to any individual (such as a claims adjudicator or medical expert) must not be made based upon the likelihood or perceived likelihood that the individual will support or tend to support the denial of benefits.

This requirement could require plans or issuers to change policies that currently create a conflict of interest and to discontinue practices that create such conflicts. The Departments believe that many plans and issuers already have such requirements in place as a matter of good business practice, but do not have sufficient data to provide an estimate. However, the Departments believe that the cost associated with this requirement will be minimal.

Enhanced notice. These interim final regulations provide new standards regarding notice to enrollees. Specifically, the statute and these interim final regulations require a plan or issuer to provide notice to enrollees, in a culturally and linguistically appropriate manner (standards for which are described later in this preamble). Plans and issuers must comply with the requirements of paragraphs (g) and (j) of the DOL claims procedure regulation, which detail requirements regarding the issuance of a notice of adverse benefit determination. Moreover, for purposes of these interim final regulations, additional content requirements apply for these notices. A plan or issuer must ensure that any notice of adverse benefit determination or final adverse benefit determination includes information sufficient to identify the claim involved. This includes the date of service, the health care provider, and the claim amount (if applicable), as well as the diagnosis code (such as an ICD–9 code, ICD–10 code, or DSM–IV code), the treatment code (such as a CPT code), and the corresponding meanings of these codes. A plan or issuer must also ensure that description of the reason or reasons for the denial includes a description of the standard that was used in denying the claim. In the case of a notice of final adverse benefit determination, this description must include a discussion of the decision. Additionally, the plan or issuer must provide a description of available internal appeals and external review processes, including information regarding how to initiate an appeal. Finally, the plan or issuer must disclose the availability of, and contact information for, any applicable office of health insurance consumer assistance or ombudsman established under PHS Act section 2793 to assist such enrollees with the internal claims and appeals and external review process. The Departments intend to issue model notices that could be used to satisfy all the notice requirements under these interim final regulations in the very near future that will mitigate the cost associated with providing them. These notices will be made available at *http://www.dol.gov/ebsa* and *http://www.hhs.gov/ociio/*. The cost of sending the notices is included in the costs of the internal and external review process. The Departments were unable to estimate the cost of providing the model notices in a linguistically and culturally appropriate manner. However the Departments believe the overall costs to be small as only a small number of plans are believed to be affected. The Departments request comments that could help in estimating these costs, particularly with respect to the individual insurance market.

Deemed exhaustion of internal process. These interim final regulations provide that, in the case of a plan or issuer that fails to strictly adhere to all the requirements of the internal claims

[47] EBSA estimates of labor rates include wages, other benefits, and overhead based on the National Occupational Employment Survey (May 2008, Bureau of Labor Statistics) and the Employment Cost Index June 2009, Bureau of Labor Statistics).

[48] This estimate is based on the methodology used to analyze the cost burden for the DOL claims procedure regulation (OMB Control Number 1210–0053).

and appeals process with respect to a claim, the claimant is deemed to have exhausted the internal claims and appeals process, regardless of whether the plan or issuer asserts that it substantially complied with these requirements or that the error was de minimis. Accordingly, under such deemed exhaustion, the claimant may initiate an external review and pursue any available remedies under applicable law, such as judicial review. The Departments are unable to quantify the costs that are associated with this requirement. While this provision possibly could result in an increased number of external appeals it could reduce overall costs if costly litigation is avoided.

Continued coverage. Finally, the statute and these interim final regulations require a plan and issuer to provide continued coverage pending the outcome of an internal appeal. For this purpose, the plan or issuer must comply with the requirements of paragraph (f)(2)(ii) of the DOL claims procedure regulation, which generally provide that a plan or issuer cannot reduce or terminate an ongoing course of treatment without providing advance notice and an opportunity for advance review. Moreover, as described more fully earlier in this preamble, the plan or issuer must also provide simultaneous external review in advance of a reduction or termination of an ongoing course of treatment.

This provision would not impose any additional cost on plans and issuers that comply with the DOL claims procedure regulation; however, costs would be incurred by issuers in the individual market. The Departments are unable to quantify the cost associated with this requirement, because they lack sufficient data on the number of simultaneous reviews that are conducted.[49]

iv. *Additional Requirements for Issuers in the Individual Insurance Market.* To address certain relevant differences in the group and individual markets, health insurance issuers offering individual health insurance coverage must comply with three additional requirements. First, these interim final regulations expand the scope of the group health coverage internal claims and appeals process to cover initial eligibility determinations. This protection is important since eligibility determinations in the individual market are frequently based on the health status of the applicant, including preexisting conditions. The Departments do not have sufficient data to quantify the costs associated with this requirement.[50]

Second, although the DOL claims procedure regulation permits group health plans to have a second level of internal appeals, these interim final regulations require health insurance issuers offering individual health insurance coverage to have only one level of internal appeals. This allows the claimant to seek either external review or judicial review immediately after an adverse determination is upheld in the first level of internal appeals. The Departments have factored this cost into their estimate of the cost for issuers offering coverage in the individual market to comply with requirement.

Finally, these interim final regulations require health insurance issuers offering individual health insurance coverage to maintain records of all claims and notices associated with their internal claims and appeals processes. An issuer must make such records available for examination upon request. Accordingly, a claimant or State or Federal agency official generally would be able to request and receive such documents free of charge. The Departments believe that minimal costs are associated with this requirement, because most issuers retain the required information in the normal course of their business operations.

v. *External Appeals.* The analysis of the cost associated with implementing an external review process under these interim final regulations focuses on the cost incurred by the following three groups that were not required to implement an external review process before the enactment of the Affordable Care Act: plans and participants in ERISA-covered self-insured plans; plans and participants in States with no external review laws, and plans and participants in States that have State laws only covering specific market segment (usually HMOs or managed care coverage).

The Departments estimate that there are about 76.9 million participants in self-insured ERISA-covered plans and approximately 13.8 million participants in self-insured State and local governmental plans. In the States which currently have no external review laws there are an estimated 4.2 million participants (2.5 million participants in ERISA-covered plans, 1.2 million participants in governmental plans and 0.6 million in individual with policies in the individual market). In the States that currently have limited external review laws, there are 15.6 million participants (8.4 million participants in ERISA-covered plans, 4.2 million participants in governmental plans and 3.0 million individuals with individual health insurance in the individual market). These estimates lead to a total of 110.5 million participants, however, only the 44.2 million participants in non-grandfathered plans will be newly covered by the external review requirement in 2011. As plans relinquish their grandfather status in subsequent years, more individuals will be covered.

The Departments assume that there are an estimated 1.3 external appeals for every 10,000 participants,[51] and that there will be approximately 2,600 external appeals in 2011. As required by these interim final regulations or applicable State law, plans or issuers are required to pay for most of the cost of the external review while claimants may be charged a modest filing fee. A recent report finds that the average cost of a review was approximately $605.[52] While the actual cost per review will vary by state and also type of review (standard or expedited), an older study covering many States suggests this is a reasonable estimate.[53] These estimates lead to an estimated cost of the external review of $1.6 million (2,600 reviews * $605) in 2011. Using a similar method and adjusting for the number of non-grandfathered plans in subsequent years, the Departments estimate that the total cost for external review is $2.9 million in 2012 and $3.9 million in 2013.

On average, about 40 percent of denials are reversed on external appeal.[54] An estimate of the dollar

[49] The Departments do not have a basis to estimate this, because the Departments do not know how often this denial takes place or how often they are appealed. The costs should be minimal, because the decisions will be made quickly, and the period of coverage will be brief. The Departments expect the cost to be small relative to the cost of reversals, which the Departments have estimated.

[50] However, the Departments believe this number to be small. Approximately 10 to 15 percent of applicants are declined coverage in the individual market, while the Departments do not know how many of those denied coverage will appeal, using appeal rates for internal and external appeals would result in only a few thousand appeals. See "Fundamentals of Underwriting in the nongroup Health Insurance Market," pages 10–12, April 13, 2005.

[51] AHIP Center for Policy and Research, "An Update on State External Review Programs, 2006," July 2008.

[52] North Carolina Department of Insurance "Healthcare Review Program: Annual Report," 2008.

[53] Pollitz, Karen, Jeff Crowley, Kevin Lucia, and Eliza Bangit "Assessing State External Review Programs and the Effects of Pending Federal Patient's Rights Legislation." Kaiser Family Foundation (2002) page 27.

[54] AHIP Center for Policy and Research, "An Update on State External Review Programs, 2006," July 2008.

amount per claim reversed in $12,400.[55] This leads to $13.4 million in additional claims being reversed by the external review process in 2011, which increases to $33.1 million in 2013. While this amount is a cost to plans, it represents a payment of benefits that should have previously been paid to participants, but was denied. Part of this amount is a transfer from plans and issuers to those now receiving payment for denied benefits. Part of the amount could also be a cost if the reversal leads to services and hence resources being utilized now that had been denied previously. The Departments are not able to distinguish between the two types but believe that most reversals are associated with a transfer.

These interim final regulations also require claimants to receive a notice informing them of the outcome of the appeal. The independent review organization that conducts the external review is required to prepare the notice; therefore, the cost of preparing and delivering this notice is included in the fee paid them by the insurer to conduct the review.

3. Summary

These interim final rules extend the protections of the DOL claims procedure regulation to non-Federal governmental plans, and the market for individual coverage. Additional protections are added that cover these two markets and also the market for ERISA covered plans. These interim final regulations also extend the requirement to provide an independent external review. The Departments estimate that the total costs for these interim final regulations is $50.4 million in 2011, $78.8 million in 2012, and $101.1 million in 2013. The estimates are summarized in table 3, below.

TABLE 3—MONETIZED IMPACTS OF INTERIM FINAL REGULATIONS

[In millions]

	2011	2012	2013
ERISA Market	$1.4	$2.5	$3.5
External Review	1.2	2.2	3.1
Internal Review *	0.0	0.0	0.0
Fair and Full Review	0.2	0.3	0.4
State & Local Government Market	2.4	4.3	6.0
External Review	0.4	0.6	0.9
Internal Review **	2.0	3.6	5.0
Fair and Full Review	0.05	0.1	0.1
Individual Market	32.5	46.4	56.8
External Review	0.1	0.2	0.2
Internal Review	28.8	46.0	56.4
Fair and Full Review	0.1	0.2	0.2
Recordkeeping	0.1	0.1	0.1
Start-up Costs	3.5	0.0	0.0
Total Costs	36.2	53.2	66.2
Amount of Reversals ***	14.2	25.6	34.9
ERISA Plans	10.3	18.7	25.7
State & Local Government Plans	3.0	5.4	7.4
Individual Market	0.9	1.5	1.9

* Assumes that ERISA plans already comply with ERISA claims and appeals regulations.
** Assumes that 90 percent of State and Local Government plans already comply with the ERISA claims and appeals regulation.
*** This amount includes both transfers and costs with identical offsetting benefits.

C. Regulatory Flexibility Act—Department of Labor and Department of Health and Human Services

The Regulatory Flexibility Act (5 U.S.C. 601 *et seq.*) (RFA) imposes certain requirements with respect to Federal rules that are subject to the notice and comment requirements of section 553(b) of the APA (5 U.S.C. 551 *et seq.*) and that are likely to have a significant economic impact on a substantial number of small entities. Section 9833 of the Code, section 734 of ERISA, and section 2792 of the PHS Act authorize the Secretaries to promulgate any interim final rules that they determine are appropriate to carry out the provisions of chapter 100 of the Code, part 7 of subtitle B or title I of ERISA, and part A of title XXVII of the PHS Act, which include PHS Act sections 2701 through 2728 and the incorporation of those sections into ERISA section 715 and Code section 9815.

Moreover, under Section 553(b) of the APA, a general notice of proposed rulemaking is not required when an agency, for good cause, finds that notice and public comment thereon are impracticable, unnecessary, or contrary to the public interest. These interim final regulations are exempt from APA, because the Departments made a good cause finding that a general notice of proposed rulemaking is not necessary earlier in this preamble. Therefore, the RFA does not apply and the Departments are not required to either certify that the rule would not have a significant economic impact on a substantial number of small entities or conduct a regulatory flexibility analysis.

Nevertheless, the Departments carefully considered the likely impact of the rule on small entities in connection with their assessment under Executive Order 12866. Consistent with the policy of the RFA, the Departments encourage the public to submit comments that suggest alternative rules that accomplish the stated purpose of the Affordable Care Act and minimize the impact on small entities.

D. Special Analyses—Department of the Treasury

Notwithstanding the determinations of the Department of Labor and Department of Health and Human

[55] North Carolina Department of Insurance "Healthcare Review Program: Annual Report," 2008.

Services, for purposes of the Department of the Treasury, it has been determined that this Treasury decision is not a significant regulatory action for purposes of Executive Order 12866. Therefore, a regulatory assessment is not required. It has also been determined that section 553(b) of the APA (5 U.S.C. chapter 5) does not apply to these interim final regulations. For the applicability of the RFA, refer to the Special Analyses section in the preamble to the cross-referencing notice of proposed rulemaking published elsewhere in this issue of the **Federal Register**. Pursuant to section 7805(f) of the Code, these temporary regulations have been submitted to the Chief Counsel for Advocacy of the Small Business Administration for comment on their impact on small businesses.

E. Paperwork Reduction Act

1. Department of Labor and Department of the Treasury

As discussed above in the Department of Labor and Department of the Treasury PRA section, these interim final regulations require group health plans and health insurance issuers offering group or individual health insurance coverage to comply with the DOL claims procedure regulation with updated standards. They also require such plans and issuers to implement an external review process.

Currently, the Departments are soliciting 60 days of public comments concerning these disclosures. The Departments have submitted a copy of these interim final regulations to OMB in accordance with 44 U.S.C. 3507(d) for review of the information collections. The Departments and OMB are particularly interested in comments that:

- Evaluate whether the collection of information is necessary for the proper performance of the functions of the agency, including whether the information will have practical utility;
- Evaluate the accuracy of the agency's estimate of the burden of the collection of information, including the validity of the methodology and assumptions used;
- Enhance the quality, utility, and clarity of the information to be collected; and
- Minimize the burden of the collection of information on those who are to respond, including through the use of appropriate automated, electronic, mechanical, or other technological collection techniques or other forms of information technology, for example, by permitting electronic submission of responses.

Comments should be sent to the Office of Information and Regulatory Affairs, Attention: Desk Officer for the Employee Benefits Security Administration either by fax to (202) 395–7285 or by e-mail to *oira_submission@omb.eop.gov.* A copy of the ICR may be obtained by contacting the PRA addressee: G. Christopher Cosby, Office of Policy and Research, U.S. Department of Labor, Employee Benefits Security Administration, 200 Constitution Avenue, NW., Room N–5718, Washington, DC 20210. Telephone: (202) 693–8410; Fax: (202) 219–4745. These are not toll-free numbers. E-mail: *ebsa.opr@dol.gov.* ICRs submitted to OMB also are available at reginfo.gov (*http://www.reginfo.gov/public/do/PRAMain*).

a. Department of Labor and Department of the Treasury: Affordable Care Act Internal Claims and Appeals and External Review Disclosures for Non-Grandfathered Plans

As discussed earlier in this preamble, under PHS Act section 2719 and these interim final regulations, all sponsors of non-grandfathered group health plans and health insurance issuers offering group health insurance coverage must comply with all requirements of the DOL claims procedure regulation (29 CFR 2560.503–1) as well as the new standards in paragraph (b)(2)(ii) of these interim final regulations.

Before the enactment of the Affordable Care Act, ERISA-covered group health plans already were required to comply with the requirements of the DOL claims procedure regulation. The DOL claims procedure regulation requires, among other things, plans to provide a claimant who is denied a claim with a written or electronic notice that contains the specific reasons for denial, a reference to the relevant plan provisions on which the denial is based, a description of any additional information necessary to perfect the claim, and a description of steps to be taken if the participant or beneficiary wishes to appeal the denial. The regulation also requires that any adverse decision upon review be in writing (including electronic means) and include specific reasons for the decision, as well as references to relevant plan provisions. The Departments are not soliciting comments concerning an information collection request (ICR) pertaining to the requirement for ERISA-covered group health plans to meet the disclosure requirements of DOL's claims procedure regulation, because the costs and burdens associated with complying with these previsions already are accounted for under the Department of Labor's Employee Benefit Plan Claims Procedure Under ERISA regulation (OMB Control Number 1210–0053).

Additional hour and cost burden is associated with paragraph (b)(2)(ii)(C) of these interim final regulations, which requires non-grandfathered ERISA-covered group health plans to provide the claimant, free of charge, with any new or additional evidence considered relied upon, or generated by the plan or issuer in connection with the claim.[56] This requirement increases the administrative burden on plans and issuers to prepare and deliver the additional information to the claimant.

Additional hour and cost burden also is associated with the requirement in paragraphs (c) and (d) of the regulations which set forth the external review requirements. The requirement for group health plans to implement an external review process will impose an hour and cost burden on plans that were not required to implement such a process before the enactment of the Affordable Care Act, such as self-insured plans, plans in states with no external review laws, and plans in states with limited scope external review laws (such as laws that only impact specific market segments like HMOs).

The Departments estimate that approximately 93 percent of large benefit and all small benefit plans administer claims using a third-party provider, or roughly 5 percent of covered individuals. In-house administration burdens are accounted for as hours, while purchased services are accounted for as dollar costs. Based on the foregoing, total burden hours are estimated at 300 hours in 2011, 500 hours in 2012, and 700 hours in 2013. Equivalent costs are $11,000, $19,000, and $26,000 respectively.

As stated in the preceding paragraph, the bulk of claims will be processed by third-party service providers. Total cost is estimated by multiplying the number of responses by the amount of time required to prepare the documents and then multiplying this by the appropriate hourly cost of either clerical workers

[56] Such evidence must be provided as soon as possible and sufficiently in advance of the date on which the notice of adverse benefit determination on review is required to be provided to give the claimant a reasonable opportunity to respond prior to that date. Additionally, before the plan or issuer can issue an adverse benefit determination on review based on a new or additional rationale, the claimant must be provided, free of charge, with the rationale. The rationale must be provided as soon as possible and sufficiently in advance of the date on which the notice of adverse benefit determination on review is required to be provided to give the claimant a reasonable opportunity to respond prior to that date.

($26.14) or doctors ($154.07),[57] and then adding the cost of copying and mailing responses ($0.54 each for those not sent electronically). Based on the foregoing, the Departments estimate that the total estimated cost burden for those plans that use service providers, including the cost of mailing all responses (including mailing costs for those prepared in-house listed in Table 2), is $243,000 in 2011, $443,000 in 2012, and $607,000 in 2013.

Type of Review: New collection.

Agencies: Employee Benefits Security Administration, Department of Labor; Internal Revenue Service, U.S. Department of the Treasury.

Title: Affordable Care Act Internal Claims and Appeals and External Review Disclosures for Non-Grandfathered Plans.

OMB Number: 1210–0144; 1545–2182.

Affected Public: Business or other for-profit; not-for-profit institutions.

Total Respondents: 607,000.

Total Responses: 62,000.

Frequency of Response: Occasionally.

Estimated Total Annual Burden Hours: 150 hours (Employee Benefits Security Administration); 150 hours (Internal Revenue Service).

Estimated Total Annual Burden Cost: $121,500 (Employee Benefits Security Administration); $121,500 (Internal Revenue Service).

2. Department of Health and Human Services

As discussed above in the Department of Labor and Department of the Treasury PRA section, these interim final regulations require group health plans and health insurance issuers offering group or individual health insurance coverage to comply with the DOL claims procedure regulation with updated standards. They also require such plans and issuers to implement an external review process.

a. ICR Regarding Affordable Care Act Internal Claims and Appeals and External Review Disclosures for Non-Grandfathered Plans

As discussed earlier in the preamble, paragraph (b)(2) and (b)(3) of these interim final regulations require all group health plan sponsors and health insurance issuers offering coverage in the group and individual health insurance markets to comply with the requirements of DOL's claims procedure regulation for their internal claims and appeals processes. Plan sponsors and issuers offering coverage in the group market also are required to satisfy the additional standards that are imposed on group health plans and issuers in paragraph (b)(2)(ii) of these interim final regulations, while issuers offering coverage in the individual health insurance market are required to satisfy the additional standards set forth in paragraph (b)(3)(ii) of these interim final regulations.

On the external review side, for purposes of this PRA analysis, the Department estimates the hour and cost burden for plans that were not previously subject to any external review requirements (self-insured plans, plans in states with no external review programs, and non-managed care plans in states that require external review only for managed care plans) to implement an external review process.

Based on the foregoing, the Department estimates that state and local governmental plans and issuers offering coverage in the individual market will incur a total hour burden hours of 566,000 hours in 2011, 989,000 hours in 2012, and 1.2 million hours in 2013 to comply with equivalent costs of $28.1 million in 2011, $57.1 million in 2012, and $70.1 million in 2013. The total estimated cost burden for those plans that use service providers, including the cost of mailing all responses is estimated to be $20.7 million in 2011, $37.4 million in 2012, and $51.1 million in 2013

The hour and cost burden is summarized below:

Type of Review: New collection.

Agency: Department of Health and Human Services.

Title: Affordable Care Act Internal Claims and Appeals and External Review Disclosures.

OMB Number: 0938–1098.

Affected Public: Business; State, Local, or Tribal Governments.

Respondents: 27,829.

Responses: 132,035,000.

Frequency of Response: Occasionally.

Estimated Total Annual Burden Hours: 566,000 hours.

Estimated Total Annual Burden Cost: $20,700,000.

b. ICR Regarding Affordable Care Act Recordkeeping Requirement for Non-Grandfathered Plans

As discussed earlier in this preamble, a health insurance issuer offering individual health insurance coverage must generally comply with all the requirements for the internal claims and appeals process that apply to group health coverage.[58] In addition to these standards, paragraph (b)(3)(ii)(H) of 45 CFR 147.136 requires health insurance issuers offering individual health insurance coverage to maintain records of all claims and notices associated with their internal claims and appeals processes. The records must be maintained for at least six years, which is the same requirement for group health plans under the ERISA recordkeeping requirements. An issuer must make such records available for examination upon request. Accordingly, a claimant or State or Federal agency official generally would be able to request and receive such documents free of charge.

The Department assumes that most of these records will be kept in the ordinary course of the issuers' business. Therefore, the Department estimates that the recordkeeping burden imposed by this ICR will require five minutes of a legal professional's time (with a rate of $119.03/hour) to determine the relevant documents that must be retained and ten minutes of clerical staff time (with a labor rate of $26.14/hour) to organize and file the required documents to ensure that they are accessible to claimants and Federal and State governmental agency officials. As shown in Table 4, below, overall, the Department estimates that there to be a total annual hour burden of 1,800 hours with an equivalent cost of $105,000.

TABLE 4—TOTAL HOUR BURDEN AND EQUIVALENT COST

	Number	Hours	Hourly labor cost	Hour burden	Equivalent cost
	(A)	(B)	(C)	A*B	A*B*C
Record Keeping (attorney): Individual	7,350	0.08	$119	613	$72,906

[57] EBSA estimates of labor rates include wages, other benefits, and overhead based on the National Occupational Employment Survey (May 2008, Bureau of Labor Statistics) and the Employment Cost Index June 2009, Bureau of Labor Statistics).

[58] The special rules in the DOL claims procedure regulation applicable only to multiemployer plans, as described earlier in this preamble, do not apply to health insurance issuers in the individual market.

TABLE 4—TOTAL HOUR BURDEN AND EQUIVALENT COST—Continued

	Number (A)	Hours (B)	Hourly labor cost (C)	Hour burden A*B	Equivalent cost A*B*C
Record Keeping (clerical): Individual	7,350	0.17	26	1,225	32,022
Total				1,838	104,927

Because this burden is borne solely by the insurers offering coverage in the individual health insurance market, and these issuers are assumed to process all claims in-house, there is no annual cost burden associated with this collection of information.

These paperwork burden estimates are summarized as follows:

Type of Review: New collection.

Agency: Department of Health and Human Services.

Title: Affordable Care Act Recordkeeping Requirements.

OMB Number: 0938–1098.

Affected Public: For Profit Business.

Respondents: 490.

Responses: 7,350.

Frequency of Response: Occasionally.

Estimated Total Annual Burden Hours: 1,800 hours.

Estimated Total Annual Burden Cost: $0.

If you comment on any of these information collection requirements, please do either of the following:

1. Submit your comments electronically as specified in the **ADDRESSES** section of this proposed rule; or

2. Submit your comments to the Office of Information and Regulatory Affairs, Office of Management and Budget:

Attention: CMS Desk Officer, OCIIO–9994–IFC.

Fax: (202) 395 6974; or

E-mail: *OIRA_submission@omb.eop.gov.*

F. Congressional Review Act

These interim final regulations are subject to the Congressional Review Act provisions of the Small Business Regulatory Enforcement Fairness Act of 1996 (5 U.S.C. 801 *et seq.*) and have been transmitted to Congress and the Comptroller General for review.

G. Unfunded Mandates Reform Act

The Unfunded Mandates Reform Act of 1995 (Pub. L. 104–4) requires agencies to prepare several analytic statements before proposing any rules that may result in annual expenditures of $100 million (as adjusted for inflation) by State, local and tribal governments or the private sector. These interim final regulations are not subject to the Unfunded Mandates Reform Act because they are being issued as interim final regulations. However, consistent with the policy embodied in the Unfunded Mandates Reform Act, the regulation has been designed to be the least burdensome alternative for State, local and tribal governments, and the private sector, while achieving the objectives of the Affordable Care Act.

H. Federalism Statement—Department of Labor and Department of Health and Human Services

Executive Order 13132 outlines fundamental principles of federalism, and requires the adherence to specific criteria by Federal agencies in the process of their formulation and implementation of policies that have "substantial direct effects" on the States, the relationship between the national government and States, or on the distribution of power and responsibilities among the various levels of government. Federal agencies promulgating regulations that have federalism implications must consult with State and local officials, and describe the extent of their consultation and the nature of the concerns of State and local officials in the preamble to the regulation.

In the Departments' view, these interim final regulations have federalism implications, because they have direct effects on the States, the relationship between the national government and States, or on the distribution of power and responsibilities among various levels of government. However, in the Departments' view, the federalism implications of these interim final regulations are substantially mitigated because, with respect to health insurance issuers, the Departments expect that the majority of States will enact laws or take other appropriate action to implement an internal and external appeals process that will meet or exceed Federal standards.

In general, through section 514, ERISA supersedes State laws to the extent that they relate to any covered employee benefit plan, and preserves State laws that regulate insurance, banking, or securities. While ERISA prohibits States from regulating a plan as an insurance or investment company or bank, the preemption provisions of section 731 of ERISA and section 2724 of the PHS Act (implemented in 29 CFR 2590.731(a) and 45 CFR 146.143(a)) apply so that the HIPAA requirements (including those of the Affordable Care Act) are not to be "construed to supersede any provision of State law which establishes, implements, or continues in effect any standard or requirement solely relating to health insurance issuers in connection with group health insurance coverage except to the extent that such standard or requirement prevents the application of a requirement" of a Federal standard. The conference report accompanying HIPAA indicates that this is intended to be the "narrowest" preemption of State laws. (See House Conf. Rep. No. 104–736, at 205, reprinted in 1996 U.S. Code Cong. & Admin. News 2018.) States may continue to apply State law requirements except to the extent that such requirements prevent the application of the Affordable Care Act requirements that are the subject of this rulemaking. State insurance laws that are more stringent than the Federal requirements are unlikely to "prevent the application of" the Affordable Care Act, and be preempted. Accordingly, States have significant latitude to impose requirements on health insurance issuers that are more restrictive than the Federal law. Furthermore, the Departments have opined that, in the instance of a group health plan providing coverage through group health insurance, the issuer will be required to follow the external review procedures established in State law (assuming the State external review procedure meets the minimum standards set out in these interim final rules).

In compliance with the requirement of Executive Order 13132 that agencies examine closely any policies that may have federalism implications or limit the policy making discretion of the States, the Departments have engaged in

efforts to consult with and work cooperatively with affected State and local officials, including attending conferences of the National Association of Insurance Commissioners, meeting with NAIC staff counsel on issues arising from these interim final regulations and consulting with State insurance officials on an individual basis. It is expected that the Departments will act in a similar fashion in enforcing the Affordable Care Act requirements, including the provisions of section 2719 of the PHS Act. Throughout the process of developing these interim final regulations, to the extent feasible within the specific preemption provisions of HIPAA as it applies to the Affordable Care Act, the Departments have attempted to balance the States' interests in regulating health insurance issuers, and Congress' intent to provide uniform minimum protections to consumers in every State. By doing so, it is the Departments' view that they have complied with the requirements of Executive Order 13132.

V. Statutory Authority

The Department of the Treasury temporary regulations are adopted pursuant to the authority contained in sections 7805 and 9833 of the Code.

The Department of Labor interim final regulations are adopted pursuant to the authority contained in 29 U.S.C. 1027, 1059, 1135, 1161–1168, 1169, 1181–1183, 1181 note, 1185, 1185a, 1185b, 1191, 1191a, 1191b, and 1191c; sec. 101(g), Public Law 104–191, 110 Stat. 1936; sec. 401(b), Public Law 105–200, 112 Stat. 645 (42 U.S.C. 651 note); sec. 512(d), Public Law 110–343, 122 Stat. 3881; sec. 1001, 1201, and 1562(e), Public Law 111–148, 124 Stat. 119, as amended by Public Law 111–152, 124 Stat. 1029; Secretary of Labor's Order 6–2009, 74 FR 21524 (May 7, 2009).

The Department of Health and Human Services interim final regulations are adopted pursuant to the authority contained in sections 2701 through 2763, 2791, and 2792 of the PHS Act (42 U.S.C. 300gg through 300gg–63, 300gg–91, and 300gg–92), as amended.

List of Subjects

26 CFR Part 54

Excise taxes, Health care, Health insurance, Pensions, Reporting and recordkeeping requirements.

29 CFR Part 2590

Continuation coverage, Disclosure, Employee benefit plans, Group health plans, Health care, Health insurance, Medical child support, Reporting and recordkeeping requirements.

45 CFR Part 147

Health care, Health insurance, Reporting and recordkeeping requirements, and State regulation of health insurance.

Steven T. Miller,

Deputy Commissioner for Services and Enforcement, Internal Revenue Service.

Approved: July 19, 2010.

Michael F. Mundaca,

Assistant Secretary of the Treasury (Tax Policy).

Signed this 16th day of July 2010.

Phyllis C. Borzi,

Assistant Secretary, Employee Benefits Security Administration, Department of Labor.

Dated: July 19, 2010.

Jay Angoff,

Director, Office of Consumer Information and Insurance Oversight.

Dated: July 19, 2010.

Kathleen Sebelius,

Secretary, Department of Health and Human Services.

DEPARTMENT OF THE TREASURY

Internal Revenue Service

26 CFR Chapter 1

■ Accordingly, 26 CFR parts 54 and 602 are amended as follows:

PART 54—PENSION EXCISE TAXES

■ **Paragraph 1.** The authority citation for part 54 is amended by adding an entry for § 54.9815–2719T in numerical order to read in part as follows:

Authority: 26 U.S.C. 7805 * * *

Section 54.9815–2719T also issued under 26 U.S.C. 9833.

■ **Par. 2.** Section 54.9815–2719T is added to read as follows:

§ 54.9815–2719T Internal claims and appeals and external review processes (temporary).

(a) *Scope and definitions*—(1) *Scope.* This section sets forth requirements with respect to internal claims and appeals and external review processes for group health plans and health insurance issuers that are not grandfathered health plans under § 54.9815–1251T. Paragraph (b) of this section provides requirements for internal claims and appeals processes. Paragraph (c) of this section sets forth rules governing the applicability of State external review processes. Paragraph (d) of this section sets forth a Federal external review process for plans and issuers not subject to an applicable State external review process. Paragraph (e) of this section prescribes requirements for ensuring that notices required to be provided under this section are provided in a culturally and linguistically appropriate manner. Paragraph (f) of this section describes the authority of the Secretary to deem certain external review processes in existence on March 23, 2010 as in compliance with paragraph (c) or (d) of this section. Paragraph (g) of this section sets forth the applicability date for this section.

(2) *Definitions.* For purposes of this section, the following definitions apply—

(i) *Adverse benefit determination.* An *adverse benefit determination* means an adverse benefit determination as defined in 29 CFR 2560.503–1, as well as any rescission of coverage, as described in § 54.9815–2712T(a)(2) (whether or not, in connection with the rescission, there is an adverse effect on any particular benefit at that time).

(ii) *Appeal (or internal appeal).* An *appeal* or *internal appeal* means review by a plan or issuer of an adverse benefit determination, as required in paragraph (b) of this section.

(iii) *Claimant. Claimant* means an individual who makes a claim under this section. For purposes of this section, references to claimant include a claimant's authorized representative.

(iv) *External review. External review* means a review of an adverse benefit determination (including a final internal adverse benefit determination) conducted pursuant to an applicable State external review process described in paragraph (c) of this section or the Federal external review process of paragraph (d) of this section.

(v) *Final internal adverse benefit determination.* A *final internal adverse benefit determination* means an adverse benefit determination that has been upheld by a plan or issuer at the completion of the internal appeals process applicable under paragraph (b) of this section (or an adverse benefit determination with respect to which the internal appeals process has been exhausted under the deemed exhaustion rules of paragraph (b)(2)(ii)(F) of this section).

(vi) *Final external review decision.* A *final external review decision,* as used in paragraph (d) of this section, means a determination by an independent review organization at the conclusion of an external review.

(vii) *Independent review organization (*or *IRO).* An *independent review organization* (or *IRO*) means an entity that conducts independent external reviews of adverse benefit determinations and final internal adverse benefit determinations pursuant to paragraph (c) or (d) of this section.

(viii) *NAIC Uniform Model Act.* The *NAIC Uniform Model Act* means the Uniform Health Carrier External Review Model Act promulgated by the National Association of Insurance Commissioners in place on July 23, 2010.

(b) *Internal claims and appeals process*—(1) *In general.* A group health plan and a health insurance issuer offering group health insurance coverage must implement an effective internal claims and appeals process, as described in this paragraph (b).

(2) *Requirements for group health plans and group health insurance issuers.* A group health plan and a health insurance issuer offering group health insurance coverage must comply with all the requirements of this paragraph (b)(2). In the case of health insurance coverage offered in connection with a group health plan, if either the plan or the issuer complies with the internal claims and appeals process of this paragraph (b)(2), then the obligation to comply with this paragraph (b)(2) is satisfied for both the plan and the issuer with respect to the health insurance coverage.

(i) *Minimum internal claims and appeals standards.* A group health plan and a health insurance issuer offering group health insurance coverage must comply with all the requirements applicable to group health plans under 29 CFR 2560.503–1, except to the extent those requirements are modified by paragraph (b)(2)(ii) of this section. Accordingly, under this paragraph (b), with respect to health insurance coverage offered in connection with a group health plan, the group health insurance issuer is subject to the requirements in 29 CFR 2560.503–1 to the same extent as the group health plan.

(ii) *Additional standards.* In addition to the requirements in paragraph (b)(2)(i) of this section, the internal claims and appeals processes of a group health plan and a health insurance issuer offering group health insurance coverage must meet the requirements of this paragraph (b)(2)(ii).

(A) *Clarification of meaning of adverse benefit determination.* For purposes of this paragraph (b)(2), an "adverse benefit determination" includes an adverse benefit determination as defined in paragraph (a)(2)(i) of this section. Accordingly, in complying with 29 CFR 2560.503–1, as well as the other provisions of this paragraph (b)(2), a plan or issuer must treat a rescission of coverage (whether or not the rescission has an adverse effect on any particular benefit at that time) as an adverse benefit determination. (Rescissions of coverage are subject to the requirements of § 54.9815–2712T.)

(B) *Expedited notification of benefit determinations involving urgent care.* Notwithstanding the rule of 29 CFR 2560.503–1(f)(2)(i) that provides for notification in the case of urgent care claims not later than 72 hours after the receipt of the claim, for purposes of this paragraph (b)(2), a plan and issuer must notify a claimant of a benefit determination (whether adverse or not) with respect to a claim involving urgent care as soon as possible, taking into account the medical exigencies, but not later than 24 hours after the receipt of the claim by the plan or issuer, unless the claimant fails to provide sufficient information to determine whether, or to what extent, benefits are covered or payable under the plan or health insurance coverage. The requirements of 29 CFR 2560.503–1(f)(2)(i) other than the rule for notification within 72 hours continue to apply to the plan and issuer. For purposes of this paragraph (b)(2)(ii)(B), a claim involving urgent care has the meaning given in 29 CFR 2560.503–1(m)(1).

(C) *Full and fair review.* A plan and issuer must allow a claimant to review the claim file and to present evidence and testimony as part of the internal claims and appeals process. Specifically, in addition to complying with the requirements of 29 CFR 2560.503–1(h)(2)—

(*1*) The plan or issuer must provide the claimant, free of charge, with any new or additional evidence considered, relied upon, or generated by the plan or issuer (or at the direction of the plan or issuer) in connection with the claim; such evidence must be provided as soon as possible and sufficiently in advance of the date on which the notice of final internal adverse benefit determination is required to be provided under 29 CFR 2560.503–1(i) to give the claimant a reasonable opportunity to respond prior to that date; and

(*2*) Before the plan or issuer can issue a final internal adverse benefit determination based on a new or additional rationale, the claimant must be provided, free of charge, with the rationale; the rationale must be provided as soon as possible and sufficiently in advance of the date on which the notice of final internal adverse benefit determination is required to be provided under 29 CFR 2560.503–1(i) to give the claimant a reasonable opportunity to respond prior to that date.

(D) *Avoiding conflicts of interest.* In addition to the requirements of 29 CFR 2560.503–1(b) and (h) regarding full and fair review, the plan and issuer must ensure that all claims and appeals are adjudicated in a manner designed to ensure the independence and impartiality of the persons involved in making the decision. Accordingly, decisions regarding hiring, compensation, termination, promotion, or other similar matters with respect to any individual (such as a claims adjudicator or medical expert) must not be made based upon the likelihood that the individual will support the denial of benefits.

(E) *Notice.* A plan and issuer must provide notice to individuals, in a culturally and linguistically appropriate manner (as described in paragraph (e) of this section) that complies with the requirements of 29 CFR 2560.503–1(g) and (j). The plan and issuer must also comply with the additional requirements of this paragraph (b)(2)(ii)(E).

(*1*) The plan and issuer must ensure that any notice of adverse benefit determination or final internal adverse benefit determination includes information sufficient to identify the claim involved (including the date of service, the health care provider, the claim amount (if applicable), the diagnosis code and its corresponding meaning, and the treatment code and its corresponding meaning).

(*2*) The plan and issuer must ensure that the reason or reasons for the adverse benefit determination or final internal adverse benefit determination includes the denial code and its corresponding meaning, as well as a description of the plan's or issuer's standard, if any, that was used in denying the claim. In the case of a notice of final internal adverse benefit determination, this description must include a discussion of the decision.

(*3*) The plan and issuer must provide a description of available internal appeals and external review processes, including information regarding how to initiate an appeal.

(*4*) The plan and issuer must disclose the availability of, and contact information for, any applicable office of health insurance consumer assistance or ombudsman established under PHS Act section 2793 to assist individuals with the internal claims and appeals and external review processes.

(F) *Deemed exhaustion of internal claims and appeals processes.* In the case of a plan or issuer that fails to strictly adhere to all the requirements of this paragraph (b)(2) with respect to a claim, the claimant is deemed to have exhausted the internal claims and appeals process of this paragraph (b), regardless of whether the plan or issuer asserts that it substantially complied

with the requirements of this paragraph (b)(2) or that any error it committed was de minimis. Accordingly the claimant may initiate an external review under paragraph (c) or (d) of this section, as applicable. The claimant is also entitled to pursue any available remedies under section 502(a) of ERISA or under State law, as applicable, on the basis that the plan or issuer has failed to provide a reasonable internal claims and appeals process that would yield a decision on the merits of the claim. If a claimant chooses to pursue remedies under section 502(a) of ERISA under such circumstances, the claim or appeal is deemed denied on review without the exercise of discretion by an appropriate fiduciary.

(iii) *Requirement to provide continued coverage pending the outcome of an appeal.* A plan and issuer subject to the requirements of this paragraph (b)(2) are required to provide continued coverage pending the outcome of an appeal. For this purpose, the plan and issuer must comply with the requirements of 29 CFR 2560.503–1(f)(2)(ii), which generally provides that benefits for an ongoing course of treatment cannot be reduced or terminated without providing advance notice and an opportunity for advance review.

(c) *State standards for external review*—(1) *In general.* (i) If a State external review process that applies to and is binding on a health insurance issuer offering group health insurance coverage includes at a minimum the consumer protections in the NAIC Uniform Model Act, then the issuer must comply with the applicable State external review process and is not required to comply with the Federal external review process of paragraph (d) of this section. In such a case, to the extent that benefits under a group health plan are provided through health insurance coverage, the group health plan is not required to comply with either this paragraph (c) or the Federal external review process of paragraph (d) of this section.

(ii) To the extent that a group health plan provides benefits other than through health insurance coverage (that is, the plan is self-insured) and is subject to a State external review process that applies to and is binding on the plan (for example, is not preempted by ERISA) and the State external review process includes at a minimum the consumer protections in the NAIC Uniform Model Act, then the plan must comply with the applicable State external review process and is not required to comply with the Federal external review process of paragraph (d) of this section.

(iii) If a plan or issuer is not required under paragraph (c)(1)(i) or (c)(1)(ii) of this section to comply with the requirements of this paragraph (c), then the plan or issuer must comply with the Federal external review process of paragraph (d) of this section, except to the extent, in the case of a plan, the plan is not required under paragraph (c)(1)(i) of this section to comply with paragraph (d) of this section.

(2) *Minimum standards for State external review processes.* An applicable State external review process must meet all the minimum consumer protections in this paragraph (c)(2). The Department of Health and Human Services will determine whether State external review processes meet these requirements.

(i) The State process must provide for the external review of adverse benefit determinations (including final internal adverse benefit determinations) by issuers (or, if applicable, plans) that are based on the issuer's (or plan's) requirements for medical necessity, appropriateness, health care setting, level of care, or effectiveness of a covered benefit.

(ii) The State process must require issuers (or, if applicable, plans) to provide effective written notice to claimants of their rights in connection with an external review for an adverse benefit determination.

(iii) To the extent the State process requires exhaustion of an internal claims and appeals process, exhaustion must be unnecessary where the issuer (or, if applicable, the plan) has waived the requirement, the issuer (or the plan) is considered to have exhausted the internal claims and appeals process under applicable law (including by failing to comply with any of the requirements for the internal appeal process, as outlined in paragraph (b)(2) of this section), or the claimant has applied for expedited external review at the same time as applying for an expedited internal appeal.

(iv) The State process provides that the issuer (or, if applicable, the plan) against which a request for external review is filed must pay the cost of the IRO for conducting the external review. Notwithstanding this requirement, the State external review process may require a nominal filing fee from the claimant requesting an external review. For this purpose, to be considered nominal, a filing fee must not exceed $25, it must be refunded to the claimant if the adverse benefit determination (or final internal adverse benefit determination) is reversed through external review, it must be waived if payment of the fee would impose an undue financial hardship, and the annual limit on filing fees for any claimant within a single plan year must not exceed $75.

(v) The State process may not impose a restriction on the minimum dollar amount of a claim for it to be eligible for external review. Thus, the process may not impose, for example, a $500 minimum claims threshold.

(vi) The State process must allow at least four months after the receipt of a notice of an adverse benefit determination or final internal adverse benefit determination for a request for an external review to be filed.

(vii) The State process must provide that IROs will be assigned on a random basis or another method of assignment that assures the independence and impartiality of the assignment process (such as rotational assignment) by a State or independent entity, and in no event selected by the issuer, plan, or the individual.

(viii) The State process must provide for maintenance of a list of approved IROs qualified to conduct the external review based on the nature of the health care service that is the subject of the review. The State process must provide for approval only of IROs that are accredited by a nationally recognized private accrediting organization.

(ix) The State process must provide that any approved IRO has no conflicts of interest that will influence its independence. Thus, the IRO may not own or control, or be owned or controlled by a health insurance issuer, a group health plan, the sponsor of a group health plan, a trade association of plans or issuers, or a trade association of health care providers. The State process must further provide that the IRO and the clinical reviewer assigned to conduct an external review may not have a material professional, familial, or financial conflict of interest with the issuer or plan that is the subject of the external review; the claimant (and any related parties to the claimant) whose treatment is the subject of the external review; any officer, director, or management employee of the issuer; the plan administrator, plan fiduciaries, or plan employees; the health care provider, the health care provider's group, or practice association recommending the treatment that is subject to the external review; the facility at which the recommended treatment would be provided; or the developer or manufacturer of the principal drug, device, procedure, or other therapy being recommended.

(x) The State process allows the claimant at least five business days to submit to the IRO in writing additional information that the IRO must consider

when conducting the external review and it requires that the claimant is notified of the right to do so. The process must also require that any additional information submitted by the claimant to the IRO must be forwarded to the issuer (or, if applicable, the plan) within one business day of receipt by the IRO.

(xi) The State process must provide that the decision is binding on the issuer (or, if applicable, the plan), as well as the claimant except to the extent that other remedies are available under State or Federal law.

(xii) The State process must require, for standard external review, that the IRO provide written notice to the claimant and the issuer (or, if applicable, the plan) of its decision to uphold or reverse the adverse benefit determination (or final internal adverse benefit determination) within no more than 45 days after the receipt of the request for external review by the IRO.

(xiii) The State process must provide for an expedited external review if the adverse benefit determination (or final internal adverse benefit determination) concerns an admission, availability of care, continued stay, or health care service for which the claimant received emergency services, but has not been discharged from a facility; or involves a medical condition for which the standard external review time frame would seriously jeopardize the life or health of the claimant or jeopardize the claimant's ability to regain maximum function. As expeditiously as possible but within no more than 72 hours after the receipt of the request for expedited external review by the IRO, the IRO must make its decision to uphold or reverse the adverse benefit determination (or final internal adverse benefit determination) and notify the claimant and the issuer (or, if applicable, the plan) of the determination. If the notice is not in writing, the IRO must provide written confirmation of the decision within 48 hours after the date of the notice of the decision.

(xiv) The State process must require that issuers (or, if applicable, plans) include a description of the external review process in or attached to the summary plan description, policy, certificate, membership booklet, outline of coverage, or other evidence of coverage it provides to participants, beneficiaries, or enrollees, substantially similar to what is set forth in section 17 of the NAIC Uniform Model Act.

(xv) The State process must require that IROs maintain written records and make them available upon request to the State, substantially similar to what is set forth in section 15 of the NAIC Uniform Model Act.

(xvi) The State process follows procedures for external review of adverse benefit determinations (or final internal adverse benefit determinations) involving experimental or investigational treatment, substantially similar to what is set forth in section 10 of the NAIC Uniform Model Act.

(3) *Transition period for existing external review processes*—(i) For plan years beginning before July 1, 2011, an applicable State external review process applicable to a health insurance issuer or group health plan is considered to meet the requirements of this paragraph (c). Accordingly, for plan years beginning before July 1, 2011, an applicable State external review process will be considered binding on the issuer or plan (in lieu of the requirements of the Federal external review process). If there is no applicable State external review process, the issuer or plan is required to comply with the requirements of the Federal external review process in paragraph (d) of this section.

(ii) For final internal adverse benefit determinations (or, in the case of simultaneous internal appeal and external review, adverse benefit determinations) provided after the first day of the first plan year beginning on or after July 1, 2011, the Federal external review process will apply unless the Department of Health and Human Services determines that a State law meets all the minimum standards of paragraph (c)(2) of this section as of the first day of the plan year.

(d) *Federal external review process.* A plan or issuer not subject to an applicable State external review process under paragraph (c) of this section must provide an effective Federal external review process in accordance with this paragraph (d) (except to the extent, in the case of a plan, the plan is described in paragraph (c)(1)(i) of this section as not having to comply with this paragraph (d)). In the case of health insurance coverage offered in connection with a group health plan, if either the plan or the issuer complies with the Federal external review process of this paragraph (d), then the obligation to comply with this paragraph (d) is satisfied for both the plan and the issuer with respect to the health insurance coverage.

(1) *Scope.* The Federal external review process established pursuant to this paragraph (d) applies to any adverse benefit determination or final internal adverse benefit determination as defined in paragraphs (a)(2)(i) and (a)(2)(v) of this section, except that a denial, reduction, termination, or a failure to provide payment for a benefit based on a determination that a participant or beneficiary fails to meet the requirements for eligibility under the terms of a group health plan is not eligible for the external review process under this paragraph (d).

(2) *External review process standards.* The Federal external review process established pursuant to this paragraph (d) will be similar to the process set forth in the NAIC Uniform Model Act and will meet standards issued by the Secretary. These standards will comply with all of the requirements described in this paragraph (d)(2).

(i) These standards will describe how a claimant initiates an external review, procedures for preliminary reviews to determine whether a claim is eligible for external review, minimum qualifications for IROs, a process for approving IROs eligible to be assigned to conduct external reviews, a process for random assignment of external reviews to approved IROs, standards for IRO decision-making, and rules for providing notice of a final external review decision.

(ii) These standards will provide an expedited external review process for—

(A) An adverse benefit determination, if the adverse benefit determination involves a medical condition of the claimant for which the timeframe for completion of an expedited internal appeal under paragraph (b) of this section would seriously jeopardize the life or health of the claimant, or would jeopardize the claimant's ability to regain maximum function and the claimant has filed a request for an expedited internal appeal under paragraph (b) of this section; or

(B) A final internal adverse benefit determination, if the claimant has a medical condition where the timeframe for completion of a standard external review pursuant to paragraph (d)(3) of this section would seriously jeopardize the life or health of the claimant or would jeopardize the claimant's ability to regain maximum function, or if the final internal adverse benefit determination concerns an admission, availability of care, continued stay, or health care service for which the claimant received emergency services, but has not been discharged from a facility.

(iii) With respect to claims involving experimental or investigational treatments, these standards will also provide additional consumer protections to ensure that adequate clinical and scientific experience and protocols are taken into account as part of the external review process.

(iv) These standards will provide that an external review decision is binding on the plan or issuer, as well as the claimant, except to the extent other remedies are available under State or Federal law.

(v) These standards may establish external review reporting requirements for IROs.

(vi) These standards will establish additional notice requirements for plans and issuers regarding disclosures to participants and beneficiaries describing the Federal external review procedures (including the right to file a request for an external review of an adverse benefit determination or a final internal adverse benefit determination in the summary plan description, policy, certificate, membership booklet, outline of coverage, or other evidence of coverage it provides to participants or beneficiaries).

(vii) These standards will require plans and issuers to provide information relevant to the processing of the external review, including, but not limited to, the information considered and relied on in making the adverse benefit determination or final internal adverse benefit determination.

(e) *Form and manner of notice.* (1) For purposes of this section, a group health plan and health insurance issuer offering group health insurance coverage are considered to provide relevant notices in a culturally and linguistically appropriate manner—

(i) For a plan that covers fewer than 100 participants at the beginning of a plan year, if the plan and issuer provide notices upon request in a non-English language in which 25 percent or more of all plan participants are literate only in the same non-English language; or

(ii) For a plan that covers 100 or more participants at the beginning of a plan year, if the plan and issuer provide notices upon request in a non-English language in which the lesser of 500 or more participants, or 10 percent or more of all plan participants, are literate only in the same non-English language.

(2) If an applicable threshold described in paragraph (e)(1) of this section is met, the plan and issuer must also—

(i) Include a statement in the English versions of all notices, prominently displayed in the non-English language, offering the provision of such notices in the non-English language;

(ii) Once a request has been made by a claimant, provide all subsequent notices to the claimant in the non-English language; and

(iii) To the extent the plan or issuer maintains a customer assistance process (such as a telephone hotline) that answers questions or provides assistance with filing claims and appeals, the plan or issuer must provide such assistance in the non-English language.

(f) *Secretarial authority.* The Secretary may determine that the external review process of a group health plan or health insurance issuer, in operation as of March 23, 2010, is considered in compliance with the applicable process established under paragraph (c) or (d) of this section if it substantially meets the requirements of paragraph (c) or (d) of this section, as applicable.

(g) *Applicability/effective date.* The provisions of this section apply for plan years beginning on or after September 23, 2010. See § 54.9815–1251T for determining the application of this section to grandfathered health plans (providing that these rules regarding internal claims and appeals and external review processes do not apply to grandfathered health plans).

(h) *Expiration date.* The applicability of this section expires on July 22, 2013 or on such earlier date as may be provided in final regulations or other action published in the **Federal Register**.

PART 602—OMB CONTROL NUMBERS UNDER THE PAPERWORK REDUCTION ACT

■ **Par. 3.** The authority citation for part 602 continues to read in part as follows:

Authority: 26 U.S.C. 7805.

■ **Par. 4.** Section 602.101(b) is amended by adding the following entry in numerical order to the table to read as follows:

§ 602.101 OMB Control numbers.

* * * * *

(b) * * *

CFR part or section where identified and described	Current OMB control No.
* * * * *	
54.9815–2719T	1545–2182
* * * * *	

DEPARTMENT OF LABOR

Employee Benefits Security Administration

29 CFR Chapter XXV

■ 29 CFR part 2590 is amended as follows:

PART 2590—RULES AND REGULATIONS FOR GROUP HEALTH PLANS

■ 1. The authority citation for part 2590 continues to read as follows:

Authority: 29 U.S.C. 1027, 1059, 1135, 1161–1168, 1169, 1181–1183, 1181 note, 1185, 1185a, 1185b, 1191, 1191a, 1191b, and 1191c; sec. 101(g), Pub. L. 104–191, 110 Stat. 1936; sec. 401(b), Pub. L. 105–200, 112 Stat. 645 (42 U.S.C. 651 note); sec. 512(d), Pub. L. 110–343, 122 Stat. 3881; sec. 1001, 1201, and 1562(e), Pub. L. 111–148, 124 Stat. 119, as amended by Pub. L. 111–152, 124 Stat. 1029; Secretary of Labor's Order 6–2009, 74 FR 21524 (May 7, 2009).

Subpart C—Other Requirements

■ 2. Section 2590.715–2719 is added to subpart C to read as follows:

§ 2590.715–2719 Internal claims and appeals and external review processes.

(a) *Scope and definitions*—(1) *Scope.* This section sets forth requirements with respect to internal claims and appeals and external review processes for group health plans and health insurance issuers that are not grandfathered health plans under § 2590.715–1251 of this part. Paragraph (b) of this section provides requirements for internal claims and appeals processes. Paragraph (c) of this section sets forth rules governing the applicability of State external review processes. Paragraph (d) of this section sets forth a Federal external review process for plans and issuers not subject to an applicable State external review process. Paragraph (e) of this section prescribes requirements for ensuring that notices required to be provided under this section are provided in a culturally and linguistically appropriate manner. Paragraph (f) of this section describes the authority of the Secretary to deem certain external review processes in existence on March 23, 2010 as in compliance with paragraph (c) or (d) of this section. Paragraph (g) of this section sets forth the applicability date for this section.

(2) *Definitions.* For purposes of this section, the following definitions apply—

(i) *Adverse benefit determination.* An *adverse benefit determination* means an adverse benefit determination as defined in 29 CFR 2560.503–1, as well as any rescission of coverage, as described in § 2590.715–2712(a)(2) of this part (whether or not, in connection with the rescission, there is an adverse effect on any particular benefit at that time).

(ii) *Appeal (or internal appeal).* An *appeal* or *internal appeal* means review

by a plan or issuer of an adverse benefit determination, as required in paragraph (b) of this section.

(iii) *Claimant. Claimant* means an individual who makes a claim under this section. For purposes of this section, references to claimant include a claimant's authorized representative.

(iv) *External review. External review* means a review of an adverse benefit determination (including a final internal adverse benefit determination) conducted pursuant to an applicable State external review process described in paragraph (c) of this section or the Federal external review process of paragraph (d) of this section.

(v) *Final internal adverse benefit determination.* A *final internal adverse benefit determination* means an adverse benefit determination that has been upheld by a plan or issuer at the completion of the internal appeals process applicable under paragraph (b) of this section (or an adverse benefit determination with respect to which the internal appeals process has been exhausted under the deemed exhaustion rules of paragraph (b)(2)(ii)(F) of this section).

(vi) *Final external review decision.* A *final external review decision,* as used in paragraph (d) of this section, means a determination by an independent review organization at the conclusion of an external review.

(vii) *Independent review organization (*or *IRO).* An *independent review organization* (or *IRO*) means an entity that conducts independent external reviews of adverse benefit determinations and final internal adverse benefit determinations pursuant to paragraph (c) or (d) of this section.

(viii) *NAIC Uniform Model Act.* The *NAIC Uniform Model Act* means the Uniform Health Carrier External Review Model Act promulgated by the National Association of Insurance Commissioners in place on July 23, 2010.

(b) *Internal claims and appeals process*—(1) *In general.* A group health plan and a health insurance issuer offering group health insurance coverage must implement an effective internal claims and appeals process, as described in this paragraph (b).

(2) *Requirements for group health plans and group health insurance issuers.* A group health plan and a health insurance issuer offering group health insurance coverage must comply with all the requirements of this paragraph (b)(2). In the case of health insurance coverage offered in connection with a group health plan, if either the plan or the issuer complies with the internal claims and appeals process of this paragraph (b)(2), then the obligation to comply with this paragraph (b)(2) is satisfied for both the plan and the issuer with respect to the health insurance coverage.

(i) *Minimum internal claims and appeals standards.* A group health plan and a health insurance issuer offering group health insurance coverage must comply with all the requirements applicable to group health plans under 29 CFR 2560.503–1, except to the extent those requirements are modified by paragraph (b)(2)(ii) of this section. Accordingly, under this paragraph (b), with respect to health insurance coverage offered in connection with a group health plan, the group health insurance issuer is subject to the requirements in 29 CFR 2560.503–1 to the same extent as the group health plan.

(ii) *Additional standards.* In addition to the requirements in paragraph (b)(2)(i) of this section, the internal claims and appeals processes of a group health plan and a health insurance issuer offering group health insurance coverage must meet the requirements of this paragraph (b)(2)(ii).

(A) *Clarification of meaning of adverse benefit determination.* For purposes of this paragraph (b)(2), an "adverse benefit determination" includes an adverse benefit determination as defined in paragraph (a)(2)(i) of this section. Accordingly, in complying with 29 CFR 2560.503–1, as well as the other provisions of this paragraph (b)(2), a plan or issuer must treat a rescission of coverage (whether or not the rescission has an adverse effect on any particular benefit at that time) as an adverse benefit determination. (Rescissions of coverage are subject to the requirements of § 2590.715–2712 of this part.)

(B) *Expedited notification of benefit determinations involving urgent care.* Notwithstanding the rule of 29 CFR 2560.503–1(f)(2)(i) that provides for notification in the case of urgent care claims not later than 72 hours after the receipt of the claim, for purposes of this paragraph (b)(2), a plan and issuer must notify a claimant of a benefit determination (whether adverse or not) with respect to a claim involving urgent care as soon as possible, taking into account the medical exigencies, but not later than 24 hours after the receipt of the claim by the plan or issuer, unless the claimant fails to provide sufficient information to determine whether, or to what extent, benefits are covered or payable under the plan or health insurance coverage. The requirements of 29 CFR 2560.503–1(f)(2)(i) other than the rule for notification within 72 hours continue to apply to the plan and issuer. For purposes of this paragraph (b)(2)(ii)(B), a claim involving urgent care has the meaning given in 29 CFR 2560.503–1(m)(1).

(C) *Full and fair review.* A plan and issuer must allow a claimant to review the claim file and to present evidence and testimony as part of the internal claims and appeals process. Specifically, in addition to complying with the requirements of 29 CFR 2560.503–1(h)(2)—

(1) The plan or issuer must provide the claimant, free of charge, with any new or additional evidence considered, relied upon, or generated by the plan or issuer (or at the direction of the plan or issuer) in connection with the claim; such evidence must be provided as soon as possible and sufficiently in advance of the date on which the notice of final internal adverse benefit determination is required to be provided under 29 CFR 2560.503–1(i) to give the claimant a reasonable opportunity to respond prior to that date; and

(2) Before the plan or issuer can issue a final internal adverse benefit determination based on a new or additional rationale, the claimant must be provided, free of charge, with the rationale; the rationale must be provided as soon as possible and sufficiently in advance of the date on which the notice of final internal adverse benefit determination is required to be provided under 29 CFR 2560.503–1(i) to give the claimant a reasonable opportunity to respond prior to that date.

(D) *Avoiding conflicts of interest.* In addition to the requirements of 29 CFR 2560.503–1(b) and (h) regarding full and fair review, the plan and issuer must ensure that all claims and appeals are adjudicated in a manner designed to ensure the independence and impartiality of the persons involved in making the decision. Accordingly, decisions regarding hiring, compensation, termination, promotion, or other similar matters with respect to any individual (such as a claims adjudicator or medical expert) must not be made based upon the likelihood that the individual will support the denial of benefits.

(E) *Notice.* A plan and issuer must provide notice to individuals, in a culturally and linguistically appropriate manner (as described in paragraph (e) of this section) that complies with the requirements of 29 CFR 2560.503–1(g) and (j). The plan and issuer must also comply with the additional requirements of this paragraph (b)(2)(ii)(E).

(1) The plan and issuer must ensure that any notice of adverse benefit

determination or final internal adverse benefit determination includes information sufficient to identify the claim involved (including the date of service, the health care provider, the claim amount (if applicable), the diagnosis code and its corresponding meaning, and the treatment code and its corresponding meaning).

(2) The plan and issuer must ensure that the reason or reasons for the adverse benefit determination or final internal adverse benefit determination includes the denial code and its corresponding meaning, as well as a description of the plan's or issuer's standard, if any, that was used in denying the claim. In the case of a notice of final internal adverse benefit determination, this description must include a discussion of the decision.

(3) The plan and issuer must provide a description of available internal appeals and external review processes, including information regarding how to initiate an appeal.

(4) The plan and issuer must disclose the availability of, and contact information for, any applicable office of health insurance consumer assistance or ombudsman established under PHS Act section 2793 to assist individuals with the internal claims and appeals and external review processes.

(F) *Deemed exhaustion of internal claims and appeals processes.* In the case of a plan or issuer that fails to strictly adhere to all the requirements of this paragraph (b)(2) with respect to a claim, the claimant is deemed to have exhausted the internal claims and appeals process of this paragraph (b), regardless of whether the plan or issuer asserts that it substantially complied with the requirements of this paragraph (b)(2) or that any error it committed was de minimis. Accordingly the claimant may initiate an external review under paragraph (c) or (d) of this section, as applicable. The claimant is also entitled to pursue any available remedies under section 502(a) of ERISA or under State law, as applicable, on the basis that the plan or issuer has failed to provide a reasonable internal claims and appeals process that would yield a decision on the merits of the claim. If a claimant chooses to pursue remedies under section 502(a) of ERISA under such circumstances, the claim or appeal is deemed denied on review without the exercise of discretion by an appropriate fiduciary.

(iii) *Requirement to provide continued coverage pending the outcome of an appeal.* A plan and issuer subject to the requirements of this paragraph (b)(2) are required to provide continued coverage pending the outcome of an appeal. For this purpose, the plan and issuer must comply with the requirements of 29 CFR 2560.503–1(f)(2)(ii), which generally provides that benefits for an ongoing course of treatment cannot be reduced or terminated without providing advance notice and an opportunity for advance review.

(c) *State standards for external review*—(1) *In general.* (i) If a State external review process that applies to and is binding on a health insurance issuer offering group health insurance coverage includes at a minimum the consumer protections in the NAIC Uniform Model Act, then the issuer must comply with the applicable State external review process and is not required to comply with the Federal external review process of paragraph (d) of this section. In such a case, to the extent that benefits under a group health plan are provided through health insurance coverage, the group health plan is not required to comply with either this paragraph (c) or the Federal external review process of paragraph (d) of this section.

(ii) To the extent that a group health plan provides benefits other than through health insurance coverage (that is, the plan is self-insured) and is subject to a State external review process that applies to and is binding on the plan (for example, is not preempted by ERISA) and the State external review process includes at a minimum the consumer protections in the NAIC Uniform Model Act, then the plan must comply with the applicable State external review process and is not required to comply with the Federal external review process of paragraph (d) of this section.

(iii) If a plan or issuer is not required under paragraph (c)(1)(i) or (c)(1)(ii) of this section to comply with the requirements of this paragraph (c), then the plan or issuer must comply with the Federal external review process of paragraph (d) of this section, except to the extent, in the case of a plan, the plan is not required under paragraph (c)(1)(i) of this section to comply with paragraph (d) of this section.

(2) *Minimum standards for State external review processes.* An applicable State external review process must meet all the minimum consumer protections in this paragraph (c)(2). The Department of Health and Human Services will determine whether State external review processes meet these requirements.

(i) The State process must provide for the external review of adverse benefit determinations (including final internal adverse benefit determinations) by issuers (or, if applicable, plans) that are based on the issuer's (or plan's) requirements for medical necessity, appropriateness, health care setting, level of care, or effectiveness of a covered benefit.

(ii) The State process must require issuers (or, if applicable, plans) to provide effective written notice to claimants of their rights in connection with an external review for an adverse benefit determination.

(iii) To the extent the State process requires exhaustion of an internal claims and appeals process, exhaustion must be unnecessary where the issuer (or, if applicable, the plan) has waived the requirement, the issuer (or the plan) is considered to have exhausted the internal claims and appeals process under applicable law (including by failing to comply with any of the requirements for the internal appeal process, as outlined in paragraph (b)(2) of this section), or the claimant has applied for expedited external review at the same time as applying for an expedited internal appeal.

(iv) The State process provides that the issuer (or, if applicable, the plan) against which a request for external review is filed must pay the cost of the IRO for conducting the external review. Notwithstanding this requirement, the State external review process may require a nominal filing fee from the claimant requesting an external review. For this purpose, to be considered nominal, a filing fee must not exceed $25, it must be refunded to the claimant if the adverse benefit determination (or final internal adverse benefit determination) is reversed through external review, it must be waived if payment of the fee would impose an undue financial hardship, and the annual limit on filing fees for any claimant within a single plan year must not exceed $75.

(v) The State process may not impose a restriction on the minimum dollar amount of a claim for it to be eligible for external review. Thus, the process may not impose, for example, a $500 minimum claims threshold.

(vi) The State process must allow at least four months after the receipt of a notice of an adverse benefit determination or final internal adverse benefit determination for a request for an external review to be filed.

(vii) The State process must provide that IROs will be assigned on a random basis or another method of assignment that assures the independence and impartiality of the assignment process (such as rotational assignment) by a State or independent entity, and in no event selected by the issuer, plan, or the individual.

(viii) The State process must provide for maintenance of a list of approved IRO qualified to conduct the external review based on the nature of the health care service that is the subject of the review. The State process must provide for approval only of IROs that are accredited by a nationally recognized private accrediting organization.

(ix) The State process must provide that any approved IRO has no conflicts of interest that will influence its independence. Thus, the IRO may not own or control, or be owned or controlled by a health insurance issuer, a group health plan, the sponsor of a group health plan, a trade association of plans or issuers, or a trade association of health care providers. The State process must further provide that the IRO and the clinical reviewer assigned to conduct an external review may not have a material professional, familial, or financial conflict of interest with the issuer or plan that is the subject of the external review; the claimant (and any related parties to the claimant) whose treatment is the subject of the external review; any officer, director, or management employee of the issuer; the plan administrator, plan fiduciaries, or plan employees; the health care provider, the health care provider's group, or practice association recommending the treatment that is subject to the external review; the facility at which the recommended treatment would be provided; or the developer or manufacturer of the principal drug, device, procedure, or other therapy being recommended.

(x) The State process allows the claimant at least five business days to submit to the IRO in writing additional information that the IRO must consider when conducting the external review and it requires that the claimant is notified of the right to do so. The process must also require that any additional information submitted by the claimant to the IRO must be forwarded to the issuer (or, if applicable, the plan) within one business day of receipt by the IRO.

(xi) The State process must provide that the decision is binding on the issuer (or, if applicable, the plan), as well as the claimant except to the extent the other remedies are available under State or Federal law.

(xii) The State process must require, for standard external review, that the IRO provide written notice to the issuer (or, if applicable, the plan) and the claimant of its decision to uphold or reverse the adverse benefit determination (or final internal adverse benefit determination) within no more than 45 days after the receipt of the request for external review by the IRO.

(xiii) The State process must provide for an expedited external review if the adverse benefit determination (or final internal adverse benefit determination) concerns an admission, availability of care, continued stay, or health care service for which the claimant received emergency services, but has not been discharged from a facility; or involves a medical condition for which the standard external review timeframe would seriously jeopardize the life or health of the claimant or jeopardize the claimant's ability to regain maximum function. As expeditiously as possible but within no more than 72 hours after the receipt of the request for expedited external review by the IRO, the IRO must make its decision to uphold or reverse the adverse benefit determination (or final internal adverse benefit determination) and notify the claimant and the issuer (or, if applicable, the plan) of the determination. If the notice is not in writing, the IRO must provide written confirmation of the decision within 48 hours after the date of the notice of the decision.

(xiv) The State process must require that issuers (or, if applicable, plans) include a description of the external review process in or attached to the summary plan description, policy, certificate, membership booklet, outline of coverage, or other evidence of coverage it provides to participants, beneficiaries, or enrollees, substantially similar to what is set forth in section 17 of the NAIC Uniform Model Act.

(xv) The State process must require that IROs maintain written records and make them available upon request to the State, substantially similar to what is set forth in section 15 of the NAIC Uniform Model Act.

(xvi) The State process follows procedures for external review of adverse benefit determinations (or final internal adverse benefit determinations) involving experimental or investigational treatment, substantially similar to what is set forth in section 10 of the NAIC Uniform Model Act.

(3) *Transition period for existing external review processes*—(i) For plan years beginning before July 1, 2011, an applicable State external review process applicable to a health insurance issuer or group health plan is considered to meet the requirements of this paragraph (c). Accordingly, for plan years beginning before July 1, 2011, an applicable State external review process will be considered binding on the issuer or plan (in lieu of the requirements of the Federal external review process). If there is no applicable State external review process, the issuer or plan is required to comply with the requirements of the Federal external review process in paragraph (d) of this section.

(ii) For final internal adverse benefit determinations (or, in the case of simultaneous internal appeal and external review, adverse benefit determinations) provided after the first day of the first plan year beginning on or after July 1, 2011, the Federal external review process will apply unless the Department of Health and Human Services determines that a State law meets all the minimum standards of paragraph (c)(2) of this section as of the first day of the plan year.

(d) *Federal external review process.* A plan or issuer not subject to an applicable State external review process under paragraph (c) of this section must provide an effective Federal external review process in accordance with this paragraph (d) (except to the extent, in the case of a plan, the plan is described in paragraph (c)(1)(i) of this section as not having to comply with this paragraph (d)). In the case of health insurance coverage offered in connection with a group health plan, if either the plan or the issuer complies with the Federal external review process of this paragraph (d), then the obligation to comply with this paragraph (d) is satisfied for both the plan and the issuer with respect to the health insurance coverage.

(1) *Scope.* The Federal external review process established pursuant to this paragraph (d) applies to any adverse benefit determination or final internal adverse benefit determination as defined in paragraphs (a)(2)(i) and (a)(2)(v) of this section, except that a denial, reduction, termination, or a failure to provide payment for a benefit based on a determination that a participant or beneficiary fails to meet the requirements for eligibility under the terms of a group health plan is not eligible for the external review process under this paragraph (d).

(2) *External review process standards.* The Federal external review process established pursuant to this paragraph (d) will be similar to the process set forth in the NAIC Uniform Model Act and will meet standards issued by the Secretary. These standards will comply with all of the requirements described in this paragraph (d)(2).

(i) These standards will describe how a claimant initiates an external review, procedures for preliminary reviews to determine whether a claim is eligible for external review, minimum qualifications for IROs, a process for

approving IROs eligible to be assigned to conduct external reviews, a process for random assignment of external reviews to approved IROs, standards for IRO decisionmaking, and rules for providing notice of a final external review decision.

(ii) These standards will provide an expedited external review process for—

(A) An adverse benefit determination, if the adverse benefit determination involves a medical condition of the claimant for which the timeframe for completion of an expedited internal appeal under paragraph (b) of this section would seriously jeopardize the life or health of the claimant, or would jeopardize the claimant's ability to regain maximum function and the claimant has filed a request for an expedited internal appeal under paragraph (b) of this section; or

(B) A final internal adverse benefit determination, if the claimant has a medical condition where the timeframe for completion of a standard external review pursuant to paragraph (d)(3) of this section would seriously jeopardize the life or health of the claimant or would jeopardize the claimant's ability to regain maximum function, or if the final internal adverse benefit determination concerns an admission, availability of care, continued stay or health care service for which the claimant received emergency services, but has not been discharged from a facility.

(iii) With respect to claims involving experimental or investigational treatments, these standards will also provide additional consumer protections to ensure that adequate clinical and scientific experience and protocols are taken into account as part of the external review process.

(iv) These standards will provide that an external review decision is binding on the plan or issuer, as well as the claimant, except to the extent other remedies are available under State or Federal law.

(v) These standards may establish external review reporting requirements for IROs.

(vi) These standards will establish additional notice requirements for plans and issuers regarding disclosures to participants and beneficiaries describing the Federal external review procedures (including the right to file a request for an external review of an adverse benefit determination or a final internal adverse benefit determination in the summary plan description, policy, certificate, membership booklet, outline of coverage, or other evidence of coverage it provides to participants or beneficiaries.

(vii) These standards will require plans and issuers to provide information relevant to the processing of the external review, including, but not limited to, the information considered and relied on in making the adverse benefit determination or final internal adverse benefit determination.

(e) *Form and manner of notice.* (1) For purposes of this section, a group health plan and health insurance issuer offering group health insurance coverage are considered to provide relevant notices in a culturally and linguistically appropriate manner—

(i) For a plan that covers fewer than 100 participants at the beginning of a plan year, if the plan and issuer provide notices upon request in a non-English language in which 25 percent or more of all plan participants are literate only in the same non-English language; or

(ii) For a plan that covers 100 or more participants at the beginning of a plan year, if the plan and issuer provide notices upon request in a non-English language in which the lesser of 500 or more participants, or 10 percent or more of all plan participants, are literate only in the same non-English language.

(2) If an applicable threshold described in paragraph (e)(1) of this section is met, the plan and issuer must also—

(i) Include a statement in the English versions of all notices, prominently displayed in the non-English language, offering the provision of such notices in the non-English language;

(ii) Once a request has been made by a claimant, provide all subsequent notices to the claimant in the non-English language; and

(iii) To the extent the plan or issuer maintains a customer assistance process (such as a telephone hotline) that answers questions or provides assistance with filing claims and appeals, the plan or issuer must provide such assistance in the non-English language.

(f) *Secretarial authority.* The Secretary may determine that the external review process of a group health plan or health insurance issuer, in operation as of March 23, 2010, is considered in compliance with the applicable process established under paragraph (c) or (d) of this section if it substantially meets the requirements of paragraph (c) or (d) of this section, as applicable.

(g) *Applicability date.* The provisions of this section apply for plan years beginning on or after September 23, 2010. See § 2590.715–1251 of this part for determining the application of this section to grandfathered health plans (providing that these rules regarding internal claims and appeals and external review processes do not apply to grandfathered health plans).

DEPARTMENT OF HEALTH AND HUMAN SERVICES

45 CFR Subtitle A

■ For the reasons stated in the preamble, the Department of Health and Human Services amends 45 CFR part 147 as follows:

PART 147—HEALTH INSURANCE REFORM REQUIREMENTS FOR THE GROUP AND INDIVIDUAL HEALTH INSURANCE MARKETS

■ 1. The authority citation for part 147 continues to read as follows:

Authority: Sections 2701 through 2763, 2791, and 2792 of the Public Health Service Act (42 U.S.C. 300gg through 300gg–63, 300gg–91, and 300gg–92), as amended.

■ 2. Add § 147.136 to read as follows:

§ 147.136 Internal claims and appeals and external review processes.

(a) *Scope and definitions*—(1) *Scope.* This section sets forth requirements with respect to internal claims and appeals and external review processes for group health plans and health insurance issuers that are not grandfathered health plans under § 147.140 of this part. Paragraph (b) of this section provides requirements for internal claims and appeals processes. Paragraph (c) of this section sets forth rules governing the applicability of State external review processes. Paragraph (d) of this section sets forth a Federal external review process for plans and issuers not subject to an applicable State external review process. Paragraph (e) of this section prescribes requirements for ensuring that notices required to be provided under this section are provided in a culturally and linguistically appropriate manner. Paragraph (f) of this section describes the authority of the Secretary to deem certain external review processes in existence on March 23, 2010 as in compliance with paragraph (c) or (d) of this section. Paragraph (g) of this section sets forth the applicability date for this section.

(2) *Definitions.* For purposes of this section, the following definitions apply—

(i) *Adverse benefit determination.* An *adverse benefit determination* means an adverse benefit determination as defined in 29 CFR 2560.503–1, as well as any rescission of coverage, as described in § 147.128 (whether or not, in connection with the rescission, there is an adverse effect on any particular benefit at that time).

(ii) *Appeal (or internal appeal).* An *appeal* or *internal appeal* means review by a plan or issuer of an adverse benefit determination, as required in paragraph (b) of this section.

(iii) *Claimant. Claimant* means an individual who makes a claim under this section. For purposes of this section, references to claimant include a claimant's authorized representative.

(iv) *External review. External review* means a review of an adverse benefit determination (including a final internal adverse benefit determination) conducted pursuant to an applicable State external review process described in paragraph (c) of this section or the Federal external review process of paragraph (d) of this section.

(v) *Final internal adverse benefit determination.* A *final internal adverse benefit determination* means an adverse benefit determination that has been upheld by a plan or issuer at the completion of the internal appeals process applicable under paragraph (b) of this section (or an adverse benefit determination with respect to which the internal appeals process has been exhausted under the deemed exhaustion rules of paragraph (b)(2)(ii)(F) or (b)(3)(ii)(F) of this section).

(vi) *Final external review decision.* A *final external review decision,* as used in paragraph (d) of this section, means a determination by an independent review organization at the conclusion of an external review.

(vii) *Independent review organization (or IRO).* An *independent review organization* (or *IRO*) means an entity that conducts independent external reviews of adverse benefit determinations and final internal adverse benefit determinations pursuant to paragraph (c) or (d) of this section.

(viii) *NAIC Uniform Model Act.* The *NAIC Uniform Model Act* means the Uniform Health Carrier External Review Model Act promulgated by the National Association of Insurance Commissioners in place on July 23, 2010.

(b) *Internal claims and appeals process*—(1) *In general.* A group health plan and a health insurance issuer offering group or individual health insurance coverage must implement an effective internal claims and appeals process, as described in this paragraph (b).

(2) *Requirements for group health plans and group health insurance issuers.* A group health plan and a health insurance issuer offering group health insurance coverage must comply with all the requirements of this paragraph (b)(2). In the case of health insurance coverage offered in connection with a group health plan, if either the plan or the issuer complies with the internal claims and appeals process of this paragraph (b)(2), then the obligation to comply with this paragraph (b)(2) is satisfied for both the plan and the issuer with respect to the health insurance coverage.

(i) *Minimum internal claims and appeals standards.* A group health plan and a health insurance issuer offering group health insurance coverage must comply with all the requirements applicable to group health plans under 29 CFR 2560.503–1, except to the extent those requirements are modified by paragraph (b)(2)(ii) of this section. Accordingly, under this paragraph (b), with respect to health insurance coverage offered in connection with a group health plan, the group health insurance issuer is subject to the requirements in 29 CFR 2560.503–1 to the same extent as the group health plan.

(ii) *Additional standards.* In addition to the requirements in paragraph (b)(2)(i) of this section, the internal claims and appeals processes of a group health plan and a health insurance issuer offering group health insurance coverage must meet the requirements of this paragraph (b)(2)(ii).

(A) *Clarification of meaning of adverse benefit determination.* For purposes of this paragraph (b)(2), an "adverse benefit determination" includes an adverse benefit determination as defined in paragraph (a)(2)(i) of this section. Accordingly, in complying with 29 CFR 2560.503–1, as well as the other provisions of this paragraph (b)(2), a plan or issuer must treat a rescission of coverage (whether or not the rescission has an adverse effect on any particular benefit at that time) as an adverse benefit determination. (Rescissions of coverage are subject to the requirements of § 147.128 of this part.)

(B) *Expedited notification of benefit determinations involving urgent care.* Notwithstanding the rule of 29 CFR 2560.503–1(f)(2)(i) that provides for notification in the case of urgent care claims not later than 72 hours after the receipt of the claim, for purposes of this paragraph (b)(2), a plan and issuer must notify a claimant of a benefit determination (whether adverse or not) with respect to a claim involving urgent care as soon as possible, taking into account the medical exigencies, but not later than 24 hours after the receipt of the claim by the plan or issuer, unless the claimant fails to provide sufficient information to determine whether, or to what extent, benefits are covered or payable under the plan or health insurance coverage. The requirements of 29 CFR 2560.503–1(f)(2)(i) other than the rule for notification within 72 hours continue to apply to the plan and issuer. For purposes of this paragraph (b)(2)(ii)(B), a claim involving urgent care has the meaning given in 29 CFR 2560.503–1(m)(1).

(C) *Full and fair review.* A plan and issuer must allow a claimant to review the claim file and to present evidence and testimony as part of the internal claims and appeals process. Specifically, in addition to complying with the requirements of 29 CFR 2560.503–1(h)(2)—

(*1*) The plan or issuer must provide the claimant, free of charge, with any new or additional evidence considered, relied upon, or generated by the plan or issuer (or at the direction of the plan or issuer) in connection with the claim; such evidence must be provided as soon as possible and sufficiently in advance of the date on which the notice of final internal adverse benefit determination is required to be provided under 29 CFR 2560.503–1(i) to give the claimant a reasonable opportunity to respond prior to that date; and

(*2*) Before the plan or issuer can issue a final internal adverse benefit determination based on a new or additional rationale, the claimant must be provided, free of charge, with the rationale; the rationale must be provided as soon as possible and sufficiently in advance of the date on which the notice of final internal adverse benefit determination is required to be provided under 29 CFR 2560.503–1(i) to give the claimant a reasonable opportunity to respond prior to that date.

(D) *Avoiding conflicts of interest.* In addition to the requirements of 29 CFR 2560.503–1(b) and (h) regarding full and fair review, the plan and issuer must ensure that all claims and appeals are adjudicated in a manner designed to ensure the independence and impartiality of the persons involved in making the decision. Accordingly, decisions regarding hiring, compensation, termination, promotion, or other similar matters with respect to any individual (such as a claims adjudicator or medical expert) must not be made based upon the likelihood that the individual will support the denial of benefits.

(E) *Notice.* A plan and issuer must provide notice to individuals, in a culturally and linguistically appropriate manner (as described in paragraph (e) of this section) that complies with the requirements of 29 CFR 2560.503–1(g) and (j). The plan and issuer must also comply with the additional

requirements of this paragraph (b)(2)(ii)(E).

(*1*) The plan and issuer must ensure that any notice of adverse benefit determination or final internal adverse benefit determination includes information sufficient to identify the claim involved (including the date of service, the health care provider, the claim amount (if applicable), the diagnosis code and its corresponding meaning, and the treatment code and its corresponding meaning).

(*2*) The plan and issuer must ensure that the reason or reasons for the adverse benefit determination or final internal adverse benefit determination includes the denial code and its corresponding meaning, as well as a description of the plan's or issuer's standard, if any, that was used in denying the claim. In the case of a notice of final internal adverse benefit determination, this description must include a discussion of the decision.

(*3*) The plan and issuer must provide a description of available internal appeals and external review processes, including information regarding how to initiate an appeal.

(*4*) The plan and issuer must disclose the availability of, and contact information for, any applicable office of health insurance consumer assistance or ombudsman established under PHS Act section 2793 to assist individuals with the internal claims and appeals and external review processes.

(F) *Deemed exhaustion of internal claims and appeals processes.* In the case of a plan or issuer that fails to strictly adhere to all the requirements of this paragraph (b)(2) with respect to a claim, the claimant is deemed to have exhausted the internal claims and appeals process of this paragraph (b), regardless of whether the plan or issuer asserts that it substantially complied with the requirements of this paragraph (b)(2) or that any error it committed was de minimis. Accordingly the claimant may initiate an external review under paragraph (c) or (d) of this section, as applicable. The claimant is also entitled to pursue any available remedies under section 502(a) of ERISA or under State law, as applicable, on the basis that the plan or issuer has failed to provide a reasonable internal claims and appeals process that would yield a decision on the merits of the claim. If a claimant chooses to pursue remedies under section 502(a) of ERISA under such circumstances, the claim or appeal is deemed denied on review without the exercise of discretion by an appropriate fiduciary.

(iii) *Requirement to provide continued coverage pending the outcome of an appeal.* A plan and issuer subject to the requirements of this paragraph (b)(2) are required to provide continued coverage pending the outcome of an appeal. For this purpose, the plan and issuer must comply with the requirements of 29 CFR 2560.503–1(f)(2)(ii), which generally provides that benefits for an ongoing course of treatment cannot be reduced or terminated without providing advance notice and an opportunity for advance review.

(3) *Requirements for individual health insurance issuers.* A health insurance issuer offering individual health insurance coverage must comply with all the requirements of this paragraph (b)(3).

(i) *Minimum internal claims and appeals standards.* A health insurance issuer offering individual health insurance coverage must comply with all the requirements of the ERISA internal claims and appeals procedures applicable to group health plans under 29 CFR 2560.503–1 except for the requirements with respect to multiemployer plans, and except to the extent those requirements are modified by paragraph (b)(3)(ii) of this section. Accordingly, under this paragraph (b), with respect to individual health insurance coverage, the issuer is subject to the requirements in 29 CFR 2560.503–1 as if the issuer were a group health plan.

(ii) *Additional standards.* In addition to the requirements in paragraph (b)(3)(i) of this section, the internal claims and appeals processes of a health insurance issuer offering individual health insurance coverage must meet the requirements of this paragraph (b)(3)(ii).

(A) *Clarification of meaning of adverse benefit determination.* For purposes of this paragraph (b)(3), an adverse benefit determination includes an adverse benefit determination as defined in paragraph (a)(2)(i) of this section. Accordingly, in complying with 29 CFR 2560.503–1, as well as other provisions of this paragraph (b)(3), an issuer must treat a rescission of coverage (whether or not the rescission has an adverse effect on any particular benefit at that time) and any decision to deny coverage in an initial eligibility determination as an adverse benefit determination. (Rescissions of coverage are subject to the requirements of 45 CFR 147.128.)

(B) *Expedited notification of benefit determinations involving urgent care.* Notwithstanding the rule of 29 CFR 2560.503–1(f)(2)(i) that provides for notification in the case of urgent care claims not later than 72 hours after the receipt of the claim, for purposes of this paragraph (b)(3), an issuer must notify a claimant of a benefit determination (whether adverse or not) with respect to a claim involving urgent care as soon as possible, taking into account the medical exigencies, but not later than 24 hours after the receipt of the claim by the issuer, unless the claimant fails to provide sufficient information to determine whether, or to what extent, benefits are covered or payable under the health insurance coverage. The requirements of 29 CFR 2560.503–1(f)(2)(i) other than the rule for notification within 72 hours continue to apply to the issuer. For purposes of this paragraph (b)(3)(ii)(B), a claim involving urgent care has the meaning given in 29 CFR 2560.503–1(m)(1).

(C) *Full and fair review.* An issuer must allow a claimant to review the claim file and to present evidence and testimony as part of the internal claims and appeals process. Specifically, in addition to complying with the requirements of 29 CFR 2560.503–1(h)(2)—

(*1*) The issuer must provide the claimant, free of charge, with any new or additional evidence considered, relied upon, or generated by the issuer (or at the direction of the issuer) in connection with the claim; such evidence must be provided as soon as possible and sufficiently in advance of the date on which the notice of final internal adverse benefit determination is required to be provided under 29 CFR 2560.503–1(i) to give the claimant a reasonable opportunity to respond prior to that date; and

(*2*) Before the issuer can issue a final internal adverse benefit determination based on a new or additional rationale, the claimant must be provided, free of charge, with the rationale; the rationale must be provided as soon as possible and sufficiently in advance of the date on which the notice of final internal adverse benefit determination is required to be provided under 29 CFR 2560.503–1(i) to give the claimant a reasonable opportunity to respond prior to that date.

(D) *Avoiding conflicts of interest.* In addition to the requirements of 29 CFR 2560.503–1(b) and (h) regarding full and fair review, the issuer must ensure that all claims and appeals are adjudicated in a manner designed to ensure the independence and impartiality of the persons involved in making the decision. Accordingly, decisions regarding hiring, compensation, termination, promotion, or other similar matters with respect to any individual (such as a claims adjudicator or medical expert) must not be made based upon

the likelihood that the individual will support the denial of benefits.

(E) *Notice.* An issuer must provide notice to individuals, in a culturally and linguistically appropriate manner (as described in paragraph (e) of this section) that complies with the requirements of 29 CFR 2560.503–1(g) and (j). The issuer must also comply with the additional requirements of this paragraph (b)(2)(ii)(E).

(*1*) The issuer must ensure that any notice of adverse benefit determination or final internal adverse benefit determination includes information sufficient to identify the claim involved (including the date of service, the health care provider, the claim amount (if applicable), the diagnosis code and its corresponding meaning, and the treatment code and its corresponding meaning).

(*2*) The issuer must ensure that the reason or reasons for the adverse benefit determination or final internal adverse benefit determination includes the denial code and its corresponding meaning, as well as a description of the issuer's standard, if any, that was used in denying the claim. In the case of a notice of final internal adverse benefit determination, this description must include a discussion of the decision.

(*3*) The issuer must provide a description of available internal appeals and external review processes, including information regarding how to initiate an appeal.

(*4*) The issuer must disclose the availability of, and contact information for, any applicable office of health insurance consumer assistance or ombudsman established under PHS Act section 2793 to assist individuals with the internal claims and appeals and external review processes.

(F) *Deemed exhaustion of internal claims and appeals processes.* In the case of an issuer that fails to strictly adhere to all the requirements of this paragraph (b)(3) with respect to a claim, the claimant is deemed to have exhausted the internal claims and appeals process of this paragraph (b), regardless of whether the issuer asserts that it substantially complied with the requirements of this paragraph (b)(3) or that any error it committed was de minimis. Accordingly the claimant may initiate an external review under paragraph (c) or (d) of this section, as applicable. The claimant is also entitled to pursue any available remedies under applicable State law on the basis that the issuer has failed to provide a reasonable internal claims and appeals process that would yield a decision on the merits of the claim.

(G) *One level of internal appeal.* Notwithstanding the requirements in 29 CFR § 2560.503–1(c)(3), a health insurance issuer offering individual health insurance coverage must provide for only one level of internal appeal before issuing a final determination.

(H) *Recordkeeping requirements.* A health insurance issuer offering individual health insurance coverage must maintain for six years records of all claims and notices associated with the internal claims and appeals process, including the information detailed in paragraph (b)(3)(ii)(E) of this section and any other information specified by the Secretary. An issuer must make such records available for examination by the claimant or State or Federal oversight agency upon request.

(iii) *Requirement to provide continued coverage pending the outcome of an appeal.* An issuer subject to the requirements of this paragraph (b)(3) is required to provide continued coverage pending the outcome of an appeal. For this purpose, the issuer must comply with the requirements of 29 CFR 2560.503–1(f)(2)(ii) as if the issuer were a group health plan, so that the issuer cannot reduce or terminate an ongoing course of treatment without providing advance notice and an opportunity for advance review.

(c) *State standards for external review*—(1) *In general.* (i) If a State external review process that applies to and is binding on a health insurance issuer offering group or individual health insurance coverage includes at a minimum the consumer protections in the NAIC Uniform Model Act, then the issuer must comply with the applicable State external review process and is not required to comply with the Federal external review process of paragraph (d) of this section. In such a case, to the extent that benefits under a group health plan are provided through health insurance coverage, the group health plan is not required to comply with either this paragraph (c) or the Federal external review process of paragraph (d) of this section.

(ii) To the extent that a group health plan provides benefits other than through health insurance coverage (that is, the plan is self-insured) and is subject to a State external review process that applies to and is binding on the plan (for example, is not preempted by ERISA) and the State external review process includes at a minimum the consumer protections in the NAIC Uniform Model Act, then the plan must comply with the applicable State external review process and is not required to comply with the Federal external review process of paragraph (d) of this section.

(iii) If a plan or issuer is not required under paragraph (c)(1)(i) or (c)(1)(ii) of this section to comply with the requirements of this paragraph (c), then the plan or issuer must comply with the Federal external review process of paragraph (d) of this section, except to the extent, in the case of a plan, the plan is not required under paragraph (c)(1)(i) of this section to comply with paragraph (d) of this section.

(2) *Minimum standards for State external review processes.* An applicable State external review process must meet all the minimum consumer protections in this paragraph (c)(2). The Department of Health and Human Services will determine whether State external review processes meet these requirements.

(i) The State process must provide for the external review of adverse benefit determinations (including final internal adverse benefit determinations) by issuers (or, if applicable, plans) that are based on the issuer's (or plan's) requirements for medical necessity, appropriateness, health care setting, level of care, or effectiveness of a covered benefit.

(ii) The State process must require issuers (or, if applicable, plans) to provide effective written notice to claimants of their rights in connection with an external review for an adverse benefit determination.

(iii) To the extent the State process requires exhaustion of an internal claims and appeals process, exhaustion must be unnecessary where the issuer (or, if applicable, the plan) has waived the requirement, the issuer (or the plan) is considered to have exhausted the internal claims and appeals process under applicable law (including by failing to comply with any of the requirements for the internal appeal process, as outlined in paragraph (b)(2) or (b)(3) of this section), or the claimant has applied for expedited external review at the same time as applying for an expedited internal appeal.

(iv) The State process provides that the issuer (or, if applicable, the plan) against which a request for external review is filed must pay the cost of the IRO for conducting the external review. Notwithstanding this requirement, the State external review process may require a nominal filing fee from the claimant requesting an external review. For this purpose, to be considered nominal, a filing fee must not exceed $25, it must be refunded to the claimant if the adverse benefit determination (or final internal adverse benefit determination) is reversed through external review, it must be waived if

payment of the fee would impose an undue financial hardship, and the annual limit on filing fees for any claimant within a single plan year (in the individual market, policy year) must not exceed $75.

(v) The State process may not impose a restriction on the minimum dollar amount of a claim for it to be eligible for external review. Thus, the process may not impose, for example, a $500 minimum claims threshold.

(vi) The State process must allow at least four months after the receipt of a notice of an adverse benefit determination or final internal adverse benefit determination for a request for an external review to be filed.

(vii) The State process must provide that IROs will be assigned on a random basis or another method of assignment that assures the independence and impartiality of the assignment process (such as rotational assignment) by a State or independent entity, and in no event selected by the issuer, plan, or the individual.

(viii) The State process must provide for maintenance of a list of approved IRO qualified to conduct the external review based on the nature of the health care service that is the subject of the review. The State process must provide for approval only of IROs that are accredited by a nationally recognized private accrediting organization.

(ix) The State process must provide that any approved IRO has no conflicts of interest that will influence its independence. Thus, the IRO may not own or control, or be owned or controlled by a health insurance issuer, a group health plan, the sponsor of a group health plan, a trade association of plans or issuers, or a trade association of health care providers. The State process must further provide that the IRO and the clinical reviewer assigned to conduct an external review may not have a material professional, familial, or financial conflict of interest with the issuer or plan that is the subject of the external review; the claimant (and any related parties to the claimant) whose treatment is the subject of the external review; any officer, director, or management employee of the issuer; the plan administrator, plan fiduciaries, or plan employees; the health care provider, the health care provider's group, or practice association recommending the treatment that is subject to the external review; the facility at which the recommended treatment would be provided; or the developer or manufacturer of the principal drug, device, procedure, or other therapy being recommended.

(x) The State process allows the claimant at least five business days to submit to the IRO in writing additional information that the IRO must consider when conducting the external review and it requires that the claimant is notified of the right to do so. The process must also require that any additional information submitted by the claimant to the IRO must be forwarded to the issuer (or, if applicable, the plan) within one business day of receipt by the IRO.

(xi) The State process must provide that the decision is binding on the issuer (or, if applicable, the plan), as well as the claimant except to the extent the other remedies are available under State or Federal law.

(xii) The State process must require, for standard external review, that the IRO provide written notice to the claimant and the issuer (or, if applicable, the plan) of its decision to uphold or reverse the adverse benefit determination (or final internal adverse benefit determination) within no more than 45 days after the receipt of the request for external review by the IRO.

(xiii) The State process must provide for an expedited external review if the adverse benefit determination (or final internal adverse benefit determination) concerns an admission, availability of care, continued stay, or health care service for which the claimant received emergency services, but has not been discharged from a facility; or involves a medical condition for which the standard external review time frame would seriously jeopardize the life or health of the claimant or jeopardize the claimant's ability to regain maximum function. As expeditiously as possible but within no more than 72 hours after the receipt of the request for expedited external review by the IRO, the IRO must make its decision to uphold or reverse the adverse benefit determination (or final internal adverse benefit determination) and notify the claimant and the issuer (or, if applicable, the plan) of the determination. If the notice is not in writing, the IRO must provide written confirmation of the decision within 48 hours after the date of the notice of the decision.

(xiv) The State process must require that issuers (or, if applicable, plans) include a description of the external review process in or attached to the summary plan description, policy, certificate, membership booklet, outline of coverage, or other evidence of coverage it provides to participants, beneficiaries, or enrollees, substantially similar to what is set forth in section 17 of the NAIC Uniform Model Act.

(xv) The State process must require that IROs maintain written records and make them available upon request to the State, substantially similar to what is set forth in section 15 of the NAIC Uniform Model Act.

(xvi) The State process follows procedures for external review of adverse benefit determinations (or final internal adverse benefit determinations) involving experimental or investigational treatment, substantially similar to what is set forth in section 10 of the NAIC Uniform Model Act.

(3) *Transition period for existing external review processes*—(i) For plan years (in the individual market, policy years) beginning before July 1, 2011, an applicable State external review process applicable to a health insurance issuer or group health plan is considered to meet the requirements of this paragraph (c). Accordingly, for plan years (in the individual market, policy years) beginning before July 1, 2011, an applicable State external review process will be considered binding on the issuer or plan (in lieu of the requirements of the Federal external review process). If there is no applicable State external review process, the issuer or plan is required to comply with the requirements of the Federal external review process in paragraph (d) of this section.

(ii) For final internal adverse benefit determinations (or, in the case of simultaneous internal appeal and external review, adverse benefit determinations) provided after the first day of the first plan year (in the individual market, policy year) beginning on or after July 1, 2011, the Federal external review process will apply unless the Department of Health and Human Services determines that a State law meets all the minimum standards of paragraph (c)(2) of this section as of the first day of the plan year (in the individual market, policy year).

(d) *Federal external review process*—A plan or issuer not subject to an applicable State external review process under paragraph (c) of this section must provide an effective Federal external review process in accordance with this paragraph (d) (except to the extent, in the case of a plan, the plan is described in paragraph (c)(1)(i) of this section as not having to comply with this paragraph (d)). In the case of health insurance coverage offered in connection with a group health plan, if either the plan or the issuer complies with the Federal external review process of this paragraph (d), then the obligation to comply with this paragraph (d) is satisfied for both the plan and the issuer

with respect to the health insurance coverage.

(1) *Scope.* The Federal external review process established pursuant to this paragraph (d) applies to any adverse benefit determination or final internal adverse benefit determination as defined in paragraphs (a)(2)(i) and (a)(2)(v) of this section, except that a denial, reduction, termination or, or a failure to provide payment for a benefit based on a determination that a participant or beneficiary fails to meet the requirements for eligibility under the terms of a group health plan is not eligible for the external review process under this paragraph (d).

(2) *External review process standards.* The Federal external review process established pursuant to this paragraph (d) will be similar to the process set forth in the NAIC Uniform Model Act and will meet standards issued by the Secretary. These standards will comply with all of the requirements described in this paragraph (d)(2).

(i) These standards will describe how a claimant initiates an external review, procedures for preliminary reviews to determine whether a claim is eligible for external review, minimum qualifications for IROs, a process for approving IROs eligible to be assigned to conduct external reviews, a process for random assignment of external reviews to approved IROs, standards for IRO decision-making, and rules for providing notice of a final external review decision.

(ii) These standards will provide an expedited external review process for—

(A) An adverse benefit determination, if the adverse benefit determination involves a medical condition of the claimant for which the timeframe for completion of an expedited internal appeal under paragraph (b) of this section would seriously jeopardize the life or health of the claimant, or would jeopardize the claimant's ability to regain maximum function and the claimant has filed a request for an expedited internal appeal under paragraph (b) of this section; or

(B) A final internal adverse benefit determination, if the claimant has a medical condition where the timeframe for completion of a standard external review pursuant to paragraph (d)(3) of this section would seriously jeopardize the life or health of the claimant or would jeopardize the claimant's ability to regain maximum function, or if the final internal adverse benefit determination concerns an admission, availability of care, continued stay or health care service for which the claimant received emergency services, but has not been discharged from a facility.

(iii) With respect to claims involving experimental or investigational treatments, these standards will also provide additional consumer protections to ensure that adequate clinical and scientific experience and protocols are taken into account as part of the external review process.

(iv) These standards will provide that an external review decision is binding on the plan or issuer, as well as the claimant, except to the extent other remedies are available under State or Federal law.

(v) These standards may establish external review reporting requirements for IROs.

(vi) These standards will establish additional notice requirements for plans and issuers regarding disclosures to participants, beneficiaries, and enrollees describing the Federal external review procedures (including the right to file a request for an external review of an adverse benefit determination or a final internal adverse benefit determination in the summary plan description, policy, certificate, membership booklet, outline of coverage, or other evidence of coverage it provides to participants, beneficiaries, or enrollees.

(vii) These standards will require plans and issuers to provide information relevant to the processing of the external review, including, but not limited to, the information considered and relied on in making the adverse benefit determination or final internal adverse benefit determination.

(e) *Form and manner of notice*—(1) *Group health coverage*—(i) For purposes of this section, a group health plan and health insurance issuer offering group health insurance coverage are considered to provide relevant notices in a culturally and linguistically appropriate manner—

(A) For a plan that covers fewer than 100 participants at the beginning of a plan year, if the plan and issuer provide notices upon request in a non-English language in which 25 percent or more of all plan participants are literate only in the same non-English language; or

(B) For a plan that covers 100 or more participants at the beginning of a plan year, if the plan and issuer provides notices upon request in a non-English language in which the lesser of 500 or more participants, or 10 percent or more of all plan participants, are literate only in the same non-English language.

(ii) If an applicable threshold described in paragraph (e)(1)(i) of this section is met, the plan and issuer must also—

(A) Include a statement in the English versions of all notices, prominently displayed in the non-English language, offering the provision of such notices in the non-English language;

(B) Once a request has been made by a claimant, provide all subsequent notices to the claimant in the non-English language; and

(C) To the extent the plan or issuer maintains a customer assistance process (such as a telephone hotline) that answers questions or provides assistance with filing claims and appeals, the plan or issuer must provide such assistance in the non-English language.

(2) *Individual health insurance coverage*—(i) For purposes of this section, a health insurance issuer offering individual health insurance coverage is considered to provide relevant notices in a culturally and linguistically appropriate manner if the issuer provides notices upon request in a non-English language in which 10 percent or more of the population residing in the claimant's county are literate only in the same non-English language, determined in guidance published by the Secretary of Health and Human Services.

(ii) If the threshold described in paragraph (e)(2)(i) of this section is met, the issuer must also—

(A) Include a statement in the English versions of all notices, prominently displayed in the non-English language, offering the provision of such notices in the non-English language;

(B) Once a request has been made by a claimant, provide all subsequent notices to the claimant in the non-English language; and

(C) To the extent the issuer maintains a customer assistance process (such as a telephone hotline) that answers questions or provides assistance with filing claims and appeals, the issuer must provide such assistance in the non-English language.

(f) *Secretarial authority.* The Secretary may determine that the external review process of a group health plan or health insurance issuer, in operation as of March 23, 2010, is considered in compliance with the applicable process established under paragraph (c) or (d) of this section if it substantially meets the requirements of paragraph (c) or (d) of this section, as applicable.

(g) *Applicability date.* The provisions of this section apply for plan years (in the individual market, policy years) beginning on or after September 23, 2010. See § 147.140 of this part for determining the application of this section to grandfathered health plans (providing that these rules regarding internal claims and appeals and external review processes do not apply to grandfathered health plans).

[FR Doc. 2010–18043 Filed 7–22–10; 8:45 am]

BILLING CODE 4830–01–P, 4510–29–P, 4120–01–P

Federal Register

Friday,
July 23, 2010

Part V

Department of Agriculture

7 CFR Part 2

Revision of Delegations of Authority; Final Rule

DEPARTMENT OF AGRICULTURE

Office of the Secretary

7 CFR Part 2

RIN 0503–AA41

Revision of Delegations of Authority

AGENCY: Office of the Secretary, USDA.

ACTION: Final rule.

SUMMARY: This document revises the delegations of authority from the Secretary of Agriculture and general officers of the Department of Agriculture (USDA) principally to reflect changes to the delegations required by the reorganization of Departmental Staff Offices, Departmental Administration, and the Assistant Secretary for Civil Rights under the newly named "Departmental Management," led by the Assistant Secretary for Administration. Other additions, deletions, and changes are made as summarized below.

DATES: *Effective Date:* Effective July 23, 2010.

FOR FURTHER INFORMATION CONTACT: Roberta Jeanquart, Chief of Staff, Office of the Assistant Secretary for Administration, USDA 1400 Independence Ave., SW., Stop 0103, Washington, DC 20250–0103 Phone (202) 720–3291 E-mail: *bobbi.jeanquart@osec.usda.gov.*

SUPPLEMENTARY INFORMATION:

Departmental Management Reorganization

Effective October 1, 2009, the Secretary of Agriculture ("Secretary") implemented within USDA a reorganization of Departmental Staff Offices, Departmental Administration, and the Assistant Secretary for Civil Rights ("ASCR") under the newly named "Departmental Management," led by the Assistant Secretary for Administration ("ASA"). For further information, *see* Secretary's Memorandum 1060–001, "Reorganization of Departmental Staff Offices, Departmental Administration, and Assistant Secretary for Civil Rights," available at *http://www.ocio.usda.gov/directives/doc/SM1060–001.pdf.* This rulemaking amends USDA's delegations of authority at 7 CFR part 2 principally to reflect this reorganization.

Under the reorganized Departmental Management organization, the following officials within USDA report directly to the ASA: Assistant Secretary for Civil Rights ("ASCR"); Chief Information Officer ("CIO");[1] Chief Financial Officer ("CFO");[2] Director, Office of Human Resources Management ("OHRM"); Director, Office of Small and Disadvantaged Business Utilization ("OSDBU"); Director, Office of Procurement and Property Management ("OPPM"); Director, Office of Advocacy and Outreach ("OAO"); Director, Office of Homeland Security and Emergency Coordination ("OHSEC");[3] Director, Office of Operations ("OO"); Director, Office of the Executive Secretariat ("OES"); and Director, Management Services. The ASA continues to provide administrative supervision of the Office of Administrative Law Judges ("OALJ"). Pursuant to this new reporting structure, the Secretary has delegated to the ASA responsibilities in the following areas: civil rights; information technology and information resources; financial systems and budget formulation and execution; human resources management; small and disadvantaged business utilization; procurement and property management; advocacy and outreach; homeland security, personnel and document security, and emergency coordination; operations support; Secretarial correspondence; and shared management services. The ASA continues to provide administrative supervision of the OALJ and has delegated the authority to assign certain proceedings to the OALJ and maintain overall responsibility and control over the OALJ Hearing Clerk's activities. Delegations from the Secretary to the ASA are reflected in 7 CFR part 2, subpart C, § 2.24.

Delegations by the ASA to other officials are reflected in 7 CFR part 2, subpart P, as follows:

- Civil rights, to the ASCR (§ 2.88).
- Information technology and information resources, to the CIO (§ 2.89).
- Financial systems and budget formulation and execution, to the CFO (§ 2.90).
- Human resources management, to the Director, OHRM (§ 2.91).
- Small and disadvantaged business utilization, to the Director, OSDBU (§ 2.92).
- Procurement and property management, to the Director, OPPM (§ 2.93).
- Advocacy and outreach, to the Director, OAO (§ 2.94).
- Homeland security, personnel and document security, and emergency coordination, to the Director, OHSEC (§ 2.95).
- Operations support, to the Director, OO (§ 2.96).
- Secretarial correspondence, to the Director, OES (§ 2.97).
- Shared management services, to the Director, Management Services (§ 2.98).

Additionally, the ASA is delegating to the Deputy Assistant Secretaries of Administration the authority to perform the duties of the ASA during the absence or unavailability of the ASA (§ 2.87).

This rulemaking reflects the establishment of two new organizations within Departmental Management. First, the Office of Advocacy and Outreach ("OAO") has been established pursuant to section 226B of the Department of Agriculture Reorganization Act of 1994 (7 U.S.C. 6934), as added by section 14013 of the Food, Conservation, and Energy Act of 2008, Public Law 110–246. The OAO was established to improve access to USDA programs and services by small farms and ranches, beginning farmers and ranchers, and socially disadvantaged farmers and ranchers. Delegations from the ASA to the Director, OAO are reflected in 7 CFR 2.94 and include certain advocacy and outreach functions previously carried out by other elements within USDA.

Second, Management Services has been established to service the human resources, information technology, budget, and procurement operational needs of the various offices that comprise Departmental Management. Delegations from the ASA to the Director, Management Services are reflected in 7 CFR 2.98.

This rulemaking also reflects the renaming of the Office of Homeland Security as the Office of Homeland Security and Emergency Coordination ("OHSEC"). The OHSEC provides Departmental executive leadership in Government-wide initiatives pertaining to physical security, emergency programs, personnel and document security, continuity of operations/continuity of government, homeland security, and operations center support to USDA emergency response and program operations nationwide. Delegations from the ASA to the Director, OHSEC are reflected in 7 CFR 2.95 and include certain physical and document security, emergency preparedness, and radiation safety

[1] The Chief Information Officer continues to report directly to the Secretary regarding certain information technology matters as required by the Clinger-Cohen Act of 1996, 44 U.S.C. 3506. *See* 7 CFR 2.89(a)(1).

[2] The Chief Financial Officer continues to report directly to the Secretary regarding certain financial management matters as required by the Chief Financial Officers Act of 1990, 31 U.S.C. 902. *See* 7 CFR 2.90(a)(1).

[3] The Director, OHSEC, reports directly to the Secretary with respect to certain functions delegated by the Secretary to the Director, OHSEC, regarding management of the personnel security functions of USDA and the safeguarding of certain national security information. *See* 7 CFR 2.95.

functions previously carried out by other elements within USDA.

This rulemaking also reflects the abolishment of the Office of Planning and Coordination (delegations formerly at 7 CFR 2.94). Additionally, delegations from the ASCR to the Director, Office of Civil Rights (formerly at 7 CFR 2.300) are removed because the ASCR is now within the Departmental Management organization under the ASA (*see* § 2.88). A new delegation is added from the ASCR to the Deputy ASCR to perform the duties of the ASCR during his or her absence or unavailability (*see* § 2.300).

The rulemaking also reflects the reorganization of several functions within the Department. These include budget formulation and program analysis duties carried out by the Director, Office of Budget and Program Analysis ("OBPA"), which is now within the Office of the Chief Financial Officer (*see* § 2.501). The ethics function of the Department (formerly at 7 CFR 2.95), for purposes of administrative supervision only, is now within the Office of Human Resources Management (*see* § 2.91). Additionally, USDA special emphasis programs have moved from the ASCR to OHRM.

To implement the changes described above, the following section in 7 CFR part 2, subpart C ("Delegations of Authority to the Deputy Secretary, the Under Secretaries, and the Assistant Secretaries for Congressional Relations and Administration"), is being removed: § 2.25 ("Assistant Secretary for Civil Rights"). (Delegations of authority by the ASA to the ASCR are now reflected in 7 CFR part 2, subpart P, § 2.88.)

The following sections in 7 CFR part 2, subpart D ("Delegations of Authority to Other General Officers and Agency Heads"), are being removed: § 2.26 ("Director, Office of the Executive Secretariat"); § 2.28 ("Chief Financial Officer"); § 2.30 ("Director, Office of Budget and Program Analysis"); § 2.32 ("Director, Office of Homeland Security"); and § 2.37 ("Chief Information Officer"). (Delegations from the ASA to the Director, OES, are now reflected in 7 CFR part 2, subpart P, § 2.97; delegations from the ASA to the CFO are now reflected in 7 CFR part 2, subpart P, § 2.90; delegations from the CFO to the Director, OBPA, are now reflected in 7 CFR part 2, subpart T, § 2.501; delegations from the ASA to the Director, OHSEC, are now reflected in 7 CFR part 2, subpart P, § 2.95; and delegations from the ASA to the CIO are now reflected in 7 CFR part 2, subpart P, § 2.89.)

Subpart M ("Delegations of Authority by the Chief Financial Officer") and § 2.75 ("Deputy Chief Financial Officer") are being removed. (Delegations to the Deputy CFO are now reflected in a new subpart T, § 2.500.)

Subpart P ("Delegations of Authority by the Assistant Secretary for Administration") is re-ordered to reflect the delegations to the officials within Departmental Management, as described above.

Subpart Q ("Delegations of Authority by the Chief Information Officer") and § 2.200 ("Deputy Chief Information Officer") are amended, respectively, to read "Delegations of Authority by the General Counsel" and "Deputy General Counsel." (Delegations to the Deputy CIO are now reflected in a new subpart S, § 2.400.)

Subpart R ("Delegations of Authority by the Assistant Secretary for Civil Rights") contains the new delegation from the ASCR to the Deputy ASCR to perform the duties of the ASCR during his or her absence or unavailability (*see* § 2.300).

Finally, to implement the reorganized Departmental Management organization, several conforming amendments are made to subpart C (§§ 2.16, 2.17, 2.20, and 2.21), subpart D (§ 2.27), subpart F (§ 2.42), subpart G (§§ 2.47, 2.48, and 2.49), subpart J (§ 2.61), and subpart K (§§ 2.65 and 2.66).

Other Delegations

This rulemaking also makes several other changes to 7 CFR part 2. The Secretarial order of succession in 7 CFR 2.5 is revised to reflect the current order of succession as established by Executive Order 13542, "Providing an Order of Succession Within the Department of Agriculture" (75 FR 27921, May 18, 2010). Amendments are made to §§ 2.4, 2.45, and 2.51 to correct obsolete or erroneous references. The delegations of authority from the Secretary to the Judicial Officer (§ 2.35) are updated to reflect the adjudicatory proceedings in which the Judicial Officer acts as the final deciding officer. Finally, a new delegation is added from the General Counsel to the Deputy General Counsel to perform the duties of the General Counsel during his or her absence or unavailability (§ 2.200).

Classification

This rule relates to internal agency management. Accordingly, pursuant to 5 U.S.C. 553, notice of proposed rulemaking and opportunity for comment are not required, and this rule may be made effective less than 30 days after publication in the **Federal Register**. This rule also is exempt from the provisions of Executive Orders 12866 and 12988. This action is not a rule as defined by the Regulatory Flexibility Act, Public Law 96–354, and the Small Business Regulatory Fairness Enforcement Act, 5 U.S.C. 801 *et seq.,* and thus is exempt from the provisions of those Acts. This rule contains no information collection or recordkeeping requirements under the Paperwork Reduction Act of 1995 (44 U.S.C. 3501 *et seq.*).

List of Subjects in 7 CFR Part 2

Authority delegations (Government agencies).

■ Accordingly, Title 7 of the Code of Federal Regulations is amended as set forth below:

PART 2—DELEGATIONS OF AUTHORITY BY THE SECRETARY OF AGRICULTURE AND GENERAL OFFICERS OF THE DEPARTMENT

■ 1. The authority for part 2 continues to read as follows:

Authority: 7 U.S.C. 6912(a)(1); 5 U.S.C. 301; Reorganization Plan No. 2 of 1953, 3 CFR 1949–1953 Comp., p. 1024.

Subpart A—General

■ 2. Revise § 2.4 to read as follows:

§ 2.4 General officers.

The work of the Department is under the supervision and control of the Secretary who is assisted by the following general officers: The Deputy Secretary, the Under Secretary for Farm and Foreign Agricultural Services; the Under Secretary for Rural Development; the Under Secretary for Food Safety; the Under Secretary for Food, Nutrition, and Consumer Services; the Under Secretary for Natural Resources and Environment; the Under Secretary for Research, Education, and Economics; the Under Secretary for Marketing and Regulatory Programs; the Assistant Secretary for Congressional Relations; the Assistant Secretary for Administration; the Assistant Secretary for Civil Rights; the General Counsel; the Inspector General; the Chief Financial Officer; the Chief Information Officer; the Judicial Officer; the Director, Office of Budget and Program Analysis; the Chief Economist; the Director, National Appeals Division; and the Director of Communications.

■ 3. Revise § 2.5 to read as follows:

§ 2.5 Order in which officers of the Department shall act as Secretary.

(a) Pursuant to Executive Order 13542, "Providing an Order of Succession Within the Department of Agriculture" (75 FR 27921, May 18, 2010), during any period in which both the Secretary and the Deputy Secretary have died, resigned, or are otherwise

unable to perform the functions and duties of the office of Secretary, the following officials designated in paragraphs (a)(1) through (a)(16) of this section shall act as Secretary, in the order in which they are listed, until such time as the Secretary or Deputy Secretary is able to perform the functions and duties of that office. Each official shall act only in the event of the death, resignation, or inability to perform the functions and duties of Secretary of the immediately preceding official:

(1) Assistant Secretary of Agriculture for Administration.

(2) Under Secretary of Agriculture for Marketing and Regulatory Programs.

(3) Under Secretary of Agriculture for Food, Nutrition, and Consumer Services.

(4) Under Secretary of Agriculture for Food Safety.

(5) Under Secretary of Agriculture for Natural Resources and Environment.

(6) Under Secretary of Agriculture for Farm and Foreign Agricultural Services.

(7) Under Secretary of Agriculture for Rural Development.

(8) Under Secretary of Agriculture for Research, Education, and Economics.

(9) General Counsel of the Department of Agriculture.

(10) Chief of Staff, Office of the Secretary.

(11) Director, Kansas City Commodity Office, Farm Service Agency.

(12) State Executive Directors of the Farm Service Agency for the States of California, Iowa, and Kansas, in order of seniority fixed by length of unbroken service as State Executive Director of that State.

(13) Regional Administrators of the Food and Nutrition Service for the Mountain Plains Regional Office (Denver, Colorado), Midwest Regional Office (Chicago, Illinois), and Western Regional Office (San Francisco, California), in order of seniority fixed by length of unbroken service as Regional Administrator of that Regional Office.

(14) Chief Financial Officer of the Department of Agriculture.

(15) Assistant Secretary of Agriculture for Civil Rights.

(16) Assistant Secretary of Agriculture for Congressional Relations.

(b) If any two or more individuals designated in paragraphs (a)(12) and (a)(13) of this section were sworn in to, or commenced service in, their respective offices on the same day, precedence shall be determined by the alphabetical order of the State in which the individual serves.

(c) No individual who is serving in an office listed in paragraphs (a)(1) through (a)(16) of this section in an acting capacity shall, by virtue of so serving, act as Secretary pursuant to this section.

(d) No individual who is serving in an office listed in paragraphs (a)(1) through (a)(16) of this section shall act as Secretary unless that individual is otherwise eligible to so serve under the Federal Vacancies Reform Act of 1998 (5 U.S.C. 3345, *et seq.*).

(e) Notwithstanding the provisions of this section and Executive Order 13542, the President retains discretion, to the extent permitted by law, to depart from the order of succession in paragraph (a) of this section in designating an acting Secretary.

Subpart C—Delegations of Authority to the Deputy Secretary, the Under Secretaries, and Assistant Secretaries for Congressional Relations and Administration

■ 4. The heading of subpart C is revised to read as set forth above.

■ 5. Amend § 2.16 by revising paragraph (a)(1)(xxxiii) to read as follows:

§ 2.16 Under Secretary for Farm and Foreign Agricultural Services.

(a) * * *

(1) * * *

(xxxiii) In coordination with the Assistant Secretary for Administration, issue receipts under section 2501A(e) of the Food, Agriculture, Conservation, and Trade Act of 1990 (7 U.S.C. 2279–1(e)).

* * * * *

■ 6. Amend § 2.17 as follows:

■ a. Revise paragraphs (a)(20)(xi), (a)(21)(xxv), and (a)(22)(viii); and

■ b. Remove and reserve paragraph (a)(22)(iii), to read as follows:

§ 2.17 Under Secretary for Rural Development.

(a) * * *

(20) * * *

(xi) In coordination with the Assistant Secretary for Administration, issue receipts under section 2501A(e) of the Food, Agriculture, Conservation, and Trade Act of 1990 (7 U.S.C. 2279–1(e)).

(21) * * *

(xxv) In coordination with the Assistant Secretary for Administration, issue receipts under section 2501A(e) of the Food, Agriculture, Conservation, and Trade Act of 1990 (7 U.S.C. 2279–1(e)).

(22) * * *

(iii) [Reserved]

* * * * *

(viii) In coordination with the Assistant Secretary for Administration, issue receipts under section 2501A(e) of the Food, Agriculture, Conservation, and Trade Act of 1990 (7 U.S.C. 2279–1(e)).

* * * * *

■ 7. Amend § 2.20 by revising paragraph (a)(3)(xxii) to read as follows:

§ 2.20 Under Secretary for Natural Resources and Environment.

(a) * * *

(3) * * *

(xxii) In coordination with the Assistant Secretary for Administration, issue receipts under section 2501A(e) of the Food, Agriculture, Conservation, and Trade Act of 1990 (7 U.S.C. 2279–1(e)).

* * * * *

■ 8. Amend § 2.21 by removing and reserving paragraphs (a)(1)(xxxi) and (a)(1)(xcv) to read as follows:

§ 2.21 Under Secretary for Research, Education, and Economics.

(a) * * *

(1) * * *

(xxxi) [Reserved]

* * * * *

(xcv) [Reserved]

* * * * *

■ 9. Revise § 2.24 to read as follows:

§ 2.24 Assistant Secretary for Administration.

(a) The following delegations of authority are made by the Secretary of Agriculture to the Assistant Secretary for Administration:

(1) *Related to civil rights.*

(i) Provide overall leadership, coordination, and direction for the Department's programs of civil rights, including program delivery, compliance, and equal employment opportunity, with emphasis on the following:

(A) Actions to enforce Title VI of the Civil Rights Act of 1964, 42 U.S.C. 2000d, prohibiting discrimination in federally assisted programs.

(B) Actions to enforce Title VII of the Civil Rights Act of 1964, as amended, 42 U.S.C. 2000e, prohibiting discrimination in Federal employment.

(C) Actions to enforce Title IX of the Education Amendments of 1972, 20 U.S.C. 1681, *et seq.,* prohibiting discrimination on the basis of sex in USDA education programs and activities funded by the Department.

(D) Actions to enforce the Age Discrimination Act of 1975, 42 U.S.C. 6102, prohibiting discrimination on the basis of age in USDA programs and activities funded by the Department.

(E) Actions to enforce section 504 of the Rehabilitation Act of 1973, as amended, 29 U.S.C. 794, prohibiting discrimination against individuals with

disabilities in USDA programs and activities funded or conducted by the Department.

(F) Actions to enforce related Executive Orders, Congressional mandates, and other laws, rules, and regulations, as appropriate.

(ii) Evaluate Departmental agency programs, activities, and impact statements for civil rights concerns.

(iii) Analyze and evaluate program participation data and equal employment opportunity data.

(iv) Provide leadership and coordinate Departmentwide programs of public notification regarding the availability of USDA programs on a nondiscriminatory basis.

(v) Coordinate with the Department of Justice on matters relating to title VI of the Civil Rights Act of 1964 (42 U.S.C. 2000d), title IX of the Education Amendments of 1972 (20 U.S.C. 1681, *et seq.*), and section 504 of the Rehabilitation Act of 1973, as amended (29 U.S.C. 794), except those matters in litigation, including administrative enforcement actions, which shall be coordinated by the Office of the General Counsel.

(vi) Coordinate with the Department of Health and Human Services on matters relating to the Age Discrimination Act of 1975, 42 U.S.C. 6102, except those matters in litigation, including administrative enforcement actions, which shall be coordinated by the Office of the General Counsel.

(vii) Order proceedings and hearings in the Department pursuant to §§ 15.9(e) and 15.86 of this title which concern consolidated or joint hearings within the Department or with other Federal departments and agencies.

(viii) Order proceedings and hearings in the Department pursuant to § 15.8 of this title after the program agency has advised the applicant or recipient of his or her failure to comply and has determined that compliance cannot be secured by voluntary means.

(ix) Issue orders to give a notice of hearing or the opportunity to request a hearing pursuant to part 15 of this title; arrange for the designation of an Administrative Law Judge to preside over any such hearing; and determine whether the Administrative Law Judge so designated will make an initial decision or certify the record to the Secretary of Agriculture with his or her recommended findings and proposed action.

(x) Authorize the taking of action pursuant to § 15.8(a) of this title relating to compliance by "other means authorized by law."

(xi) Make determinations required by § 15.8(d) of this title that compliance cannot be secured by voluntary means, and then take action, as appropriate.

(xii) Make determinations that program complaint investigations performed under § 15.6 of this title establish a proper basis for findings of discrimination, and that actions taken to correct such findings are adequate.

(xiii) Investigate (or make determinations that program complaint investigations establish a proper basis for final determinations), make final determinations on both the merits and required corrective action, and, where applicable, make recommendations to the Secretary that relief be granted under 7 U.S.C. 6998(d) notwithstanding the finality of National Appeals Division decisions, as to complaints filed under parts 15a, 15b, and 15d of this title.

(xiv) Conduct civil rights investigations and compliance reviews Departmentwide.

(xv) Develop regulations, plans, and procedures necessary to carry out the Department's civil rights programs, including the development, implementation, and coordination of Action Plans.

(xvi) *Related to Equal Employment Opportunity (EEO).* Designate the Department's Director of Equal Employment Opportunity with authority:

(A) To perform the functions and responsibilities of that position under 29 CFR part 1614, including the authority:

(*1*) To make changes in programs and procedures designed to eliminate discriminatory practices and improve the Department's EEO program.

(*2*) To provide EEO services for managers and employees.

(*3*) To make final agency decisions on EEO complaints by Department employees or applicants for employment and order such corrective measures in such complaints as may be considered necessary, including the recommendation for such disciplinary action as is warranted when an employee has been found to have engaged in a discriminatory practice.

(B) Administer the Department's EEO program.

(C) Oversee and manage the EEO counseling function for the Department.

(D) Process formal EEO complaints by employees or applicants for employment.

(E) Investigate Department EEO complaints and make final decisions on EEO complaints, except in those cases where the Assistant Secretary for Administration (or a person in the immediate office of the Assistant Secretary for Administration) or the Assistant Secretary for Civil Rights (or a person directly supervised by the Assistant Secretary for Civil Rights) has participated in the events that gave rise to the matter.

(F) Order such corrective measures in EEO complaints as may be considered necessary, including the recommendation for such disciplinary action as is warranted when an employee has been found to have engaged in a discriminatory practice.

(G) Provide liaison on EEO matters concerning complaints and appeals with the Department agencies and Department employees.

(H) Conduct EEO evaluations and develop policy regarding EEO programs.

(I) Provide liaison on EEO programs and activities with the Equal Employment Opportunity Commission and the Office of Personnel Management.

(xvii) Administer the discrimination appeals and complaints program for the Department, including all formal individual or group appeals, where the system provides for an avenue of redress to the Department level, Equal Employment Opportunity Commission, or other outside authority.

(xviii) Make final determinations, or enter into settlement agreements, on discrimination complaints in federally conducted programs subject to the Equal Credit Opportunity Act. This delegation includes the authority to make compensatory damage awards whether pursuant to a final determination or in a settlement agreement under the authority of the Equal Credit Opportunity Act and the authority to obligate agency funds, including Commodity Credit Corporation and Federal Crop Insurance Corporation funds to satisfy such an award.

(xix) Make final determinations in proceedings under part 15f of this title where review of an administrative law judge decision is undertaken.

(xx) Provide civil rights and equal employment opportunity support services, with authority to take actions required by law or regulation to perform such services for:

(A) The Secretary of Agriculture.

(B) The general officers of the Department.

(C) The offices and agencies reporting to the Assistant Secretary for Administration.

(D) Any other offices or agencies of the Department as may be agreed.

(xxi) Redelegate, as appropriate, any authority delegated under paragraph (a)(1) to general officers of the Department and heads of Departmental agencies.

(2) *Related to information technology and information resources.*

(i) [Reserved]

(ii) Oversee all information technology and information resource management activities relating to the programs and operations of the Department and component agencies. This oversight includes approving information technology investments, monitoring and evaluating the performance of those investments and information resource management activities, approval of all architectures and components thereto and determining whether to continue, modify, or terminate an information technology program or project.

(iii) Provide advice and other assistance to the Secretary and other senior management personnel to ensure that information technology is acquired and managed for the Department consistent with chapter 35 of title 44, United States Code (Coordination of Federal Information Policy).

(iv) Develop, implement, and maintain a sound and integrated Department-wide information technology architecture.

(v) Promote the effective and efficient design and operation of all major information resources management processes for the Department, including improvements to work processes of the Department.

(vi) Approve the acquisition or procurement of information technology resources by, or on behalf of, any Department agency or office.

(vii) Collaborate with Department procurement personnel with respect to information technology acquisition strategy and policy.

(viii) Designate the Major Information Technology Systems Executive in USDA to integrate and unify the management process for the Department's major information technology system acquisitions and to monitor implementation of the policies and practices set forth in Office of Management and Budget (OMB) Circular No. A–109, Major Systems Acquisitions, for information technology. This includes the authority to:

(A) Ensure that OMB Circular No. A–109 is effectively implemented for information technology systems in the Department and that the management objectives of the Circular are realized.

(B) Review the program management of each major information technology system acquisition.

(C) Approve the appointment of the program manager for each major information technology systems acquisition.

(D) Designate any Departmental information technology acquisition as a major system acquisition under OMB Circular No. A–109.

(ix) On an annual basis:

(A) Assess Department-wide personnel requirements regarding knowledge and skill in information resources management, and the adequacy of such requirements, to achieve the performance goals established for information resources management.

(B) Develop strategies and specific plans for hiring, training, and professional development at the executive and management level to meet personnel information technology personnel requirements.

(C) Report to the Secretary on progress made in improving information resources management capability.

(x) Designate the senior official to carry out the responsibilities of the Department under chapter 35 of title 44, United States Code (Coordination of Federal Information Policy), including:

(A) Ensure that the information policies, principles, standards, guidelines, rules and regulations prescribed by OMB are appropriately implemented within the Department.

(B) Review proposed Department reporting and record keeping requirements, including those contained in rules and regulations, to ensure that they impose the minimum burden upon the public and have practical utility for the Department.

(C) Develop and implement procedures for assessing the burden to the public and costs to the Department of information requirements contained in proposed legislation affecting Department programs.

(D) Assist OMB in the performance of its functions assigned under the E-Government Act of 2002 (Pub. L. 107–347), including review of Department and Agency activities for compliance.

(E) Assist OMB in the performance of its functions assigned under the Paperwork Reduction Act of 1995 (44 U.S.C. 3501–3520), including review of Department and Agency activities for compliance.

(xi) The Assistant Secretary for Administration is also responsible for the following:

(A) Provide Department-wide guidance and direction in planning, developing, documenting, and managing applications software projects in accordance with Federal and Department information processing standards, procedures, and guidelines.

(B) Provide Department-wide guidance and direction in all aspects of information technology, including: Feasibility studies; economic analyses; systems design; acquisition of equipment, software, services, and timesharing arrangements; systems installation; systems performance and capacity evaluation; information technology investment governance; cybersecurity; and privacy. Monitor these activities for agencies' major systems development efforts to assure effective and economic use of resources and compatibility among systems of various agencies when required.

(C) Manage the Enterprise Data Centers, including setting rates to recover the cost of goods and services within approved policy and funding levels; and oversee the delivery of Enterprise Data Center goods and services, with authority to take actions required by law or regulation to perform such services for:

(*1*) The Secretary of Agriculture.

(*2*) The general officers of the Department.

(*3*) The offices and agencies reporting to the Assistant Secretary for Administration.

(*4*) Any other offices or agencies of the Department as may be agreed.

(D) Manage a comprehensive set of end user office automation services, including setting rates to recover the cost of goods and services within approved policy and funding levels; and oversee the delivery of goods and services associated with end user office automation services, with authority to take actions required by law or regulation to perform such services for any offices or agencies of the Department as may be agreed (except for the Office of the Secretary, the general officers of the Department, and the agencies and offices reporting to the Assistant Secretary for Administration, as specified in § 2.24(a)(11)(i)).

(E) Manage the Agricultural Security Operations Center to enable the Department to effectively monitor, detect, analyze, protect, report, and respond against known cyber vulnerabilities, attacks, and exploitations.

(F) Manage the Department's Certification and Accreditation process to ensure the Department and agencies have successfully conducted periodic risk assessments of its systems; grant the authority to operate for systems that have successfully completed the Certification and Accreditation process; and rescind or suspend the authority to operate for systems subject to repeated and/or significant security issues.

(G) Ensure that OMB Circular No. A–16, Coordination of Geographic Information and Related Spatial Data Activities, is effectively implemented in the Department and that the management objectives of the Circular

are realized; and provide Department-wide guidance and direction in governing, developing, implementing, and maintaining a sound and integrated geospatial architecture.

(H) Review and evaluate information technology activities related to delegated functions to assure that they conform to all applicable Federal and Department information technology management policies, plans, standards, procedures, and guidelines.

(I) Design, develop, implement, and revise systems, processes, work methods, and techniques to improve the management and operational effectiveness of information resources.

(J) Administer the Departmental records, forms, reports and Directives Management Programs.

(K) Manage all aspects of the USDA Telecommunications Program including planning, development, acquisition, and use of equipment and systems for voice, data, and communications, excluding the actual procurement of data transmission equipment, software, maintenance, and related supplies.

(L) Manage Departmental telecommunications contracts.

(M) Provide technical advice throughout the Department.

(N) Implement a program for applying information resources management technology to improve productivity in the Department.

(O) Plan, develop, install, and operate computer-based systems for message exchange, scheduling, computer conferencing, televideo technologies, and other applications of office automation technology which can be commonly used by multiple Department agencies and offices.

(P) Represent the Department in contacts with the Government Accountability Office, the General Services Administration, OMB, the National Institute of Standards and Technology, and other organizations or agencies on matters related to delegated responsibilities.

(xii) Implement policies established pursuant to paragraphs (a)(2)(ii) through (a)(2)(xi) of this section by:

(A) Disposing of information technology that is acquired by a Department agency in violation of procedures or standards for the Department Information Systems Technology Architecture.

(B) Establishing information technology and information resources management performance standards for agency Chief Information Officers, information resources managers, and project managers to be used in the performance appraisal process.

(C) Approving the selection of agency Chief Information Officers and agency major information technology system project managers in accordance with OMB policies.

(D) Providing recommendations to Agency Heads for the removal or replacement of information technology project managers, when, in the opinion of the Assistant Secretary for Administration, applicable laws and policies are being violated, or, when the cost, schedule, or performance of an information technology project would indicate management deficiencies.

(E) Withdrawing agencies' authority to obligate funds on Information Technology programs or projects if the agency violates the Assistant Secretary for Administration policies, standards, or Department Information Systems Technology Architecture.

(F) Requiring agencies to validate and verify major information technology systems through the use of an existing contract for such purpose designated by the Assistant Secretary for Administration.

(G) Requiring approval by the Assistant Secretary for Administration of any proposed acquisition of information technology (whether through the award or modification of a procurement contract, a cooperative or other agreement with a non-Federal party, or an interagency agreement) to ensure technical conformance to the Department technical architecture.

(H) Providing guidance to USDA regarding implementation of Section 508 of the Rehabilitation Act, as well as on-going consultative assistance regarding information technology accessibility, and reviewing progress made toward achieving information technology accessibility for USDA employees and individuals with disabilities.

(xiii) *Related to the Privacy Act.* Appoint a Department Privacy Act Officer; oversee general officers and agency heads in the development and implementation of policies issued pursuant to the provisions of the Privacy Act, 5 U.S.C. 552a; and provide consultation and guidance regarding those policies.

(xiv) *Related to the Freedom of Information Act.* Designate the Chief Freedom of Information Act Officer for the Department; oversee general officers and agency heads in efficient and appropriate compliance with the provisions of the Freedom of Information Act (5 U.S.C. 552); monitor implementation of 5 U.S.C. 552 throughout the agency and keep the Secretary, the General Counsel, and the Attorney General informed regarding agency performance in its implementation; recommend to the Secretary necessary adjustments to agency practices, policies, personnel, and funding to improve implementation of 5 U.S.C. 552; review and report to the Attorney General, through the Secretary, as the Attorney General may direct; and facilitate public understanding of the purposes of the statutory exemptions contained in 5 U.S.C. 552.

(3) *Related to financial systems and budget formulation and execution.*

(i) [Reserved]

(ii) Oversee all financial management activities relating to the programs and operations of the Department and component agencies.

(iii) Develop and maintain an integrated accounting and financial system for the Department and component agencies, including financial reporting and internal controls, which—

(A) Complies with applicable accounting principles, standards, and requirements, and internal control standards;

(B) Complies with such policies and requirements as may be prescribed by the Director of the Office of Management and Budget (OMB);

(C) Complies with any other requirements applicable to such systems; and

(D) Provides for complete, reliable, consistent, and timely information which is prepared on a uniform basis and which is responsive to the financial information needs of Department management and for the development and reporting of cost information, the integration of accounting and budgeting information, and the systematic measurement of performance.

(iv) Make recommendations to the Secretary regarding the selection of the Deputy Chief Financial Officer of the Department, and selection of principal financial officers of component agencies of the Department.

(v) Direct, manage, and provide policy guidance and oversight of Department financial management personnel, activities, and operations, including:

(A) Prepare and annually revise a Departmental plan to—

(*1*) Implement the 5-year financial management plan prepared by the Director of OMB under 31 U.S.C. 3512(a)(3).

(*2*) Comply with the requirements established for agency financial statements under 31 U.S.C. 3515 and with the requirements for audits of Department financial statements established in 31 U.S.C. 3521(e) and (f).

(B) Develop Departmental financial management budgets, including the oversight and recommendation of

approval of component agency financial management budgets.

(C) Recruit, select, and train personnel to carry out Departmental financial management functions.

(D) Approve and manage Departmental, and approve component agency, financial management systems design or enhancement projects.

(E) Implement and approve Departmental, and approve component agency, asset management systems, including systems for cash management, credit management, debt collection, and property and inventory management and control.

(vi) Prepare and transmit, by not later than 60 days after the submission of the audit report required by 31 U.S.C. 3521(f), an annual report to the Secretary and the Director of OMB, which shall include:

(A) A description and analysis of the status of financial management of the Department.

(B) The annual financial statements prepared under 31 U.S.C. 3521.

(C) The audit report transmitted to the Secretary under 31 U.S.C. 3521.

(D) A summary of the reports on internal accounting and administrative control systems submitted to the President and the Congress under the amendments made by the Federal Managers' Financial Integrity Act of 1982 (31 U.S.C. 1113, 3512).

(E) Other information the Secretary considers appropriate to inform fully the President and the Congress concerning the financial management of the Department.

(vii) Monitor the financial execution of the budget of the Department in relation to projected and actual expenditures, and prepare and submit to the Secretary timely performance reports.

(viii) Review, on a biennial basis, the fees, royalties, rent, and other charges imposed by the Department for services and things of value it produces, and make recommendations on revising those charges to reflect costs incurred by the Department in providing those services and things of value.

(ix) Access all records, reports, audits, reviews, documents, papers, recommendations, or other material that are the property of the Department or that are available to the Department, and that relate to programs and operations with respect to which the Chief Financial Officer has responsibilities, except that this grant allows no access greater than that permitted under any other law to records, reports, audits, reviews, documents, papers, recommendations, or other material of the Office of Inspector General.

(x) Request such information or assistance as may be necessary for carrying out the duties and responsibilities granted by the Chief Financial Officers Act of 1990 (Pub. L. 101–576), from any Federal, State, or local governmental entity.

(xi) To the extent and in such amounts as may be provided in advance by appropriations acts, enter into contracts and other arrangements with public agencies and with private persons for the preparation of financial statements, studies, analyses, and other services, and make such payments as may be necessary to carry out the duties and prerogatives of the Chief Financial Officer.

(xii) Designate the Department's Comptroller of the Department Working Capital Fund.

(xiii) Establish Departmental policies, standards, techniques, and procedures applicable to all USDA agencies for the following areas:

(A) Development, maintenance, review and approval of all departmental, and review and approval of component agency, internal control, fiscal, financial management and accounting systems including the financial aspects of payment management and property systems.

(B) Selection, standardization, and simplification of program delivery processes utilizing grants, cooperative agreements and other forms of Federal assistance.

(C) Review and approval of Federal assistance, internal control, fiscal, accounting and financial management regulations and instructions proposed or issued by USDA agencies for conformity with Departmental requirements.

(D) Section 5301 of the Anti-Drug Abuse Act of 1988 (21 U.S.C. 862) as it relates to grants, loans, and licenses.

(xiv) Establish policies related to the Department Working Capital Fund.

(xv) Approve regulations, procedures and rates for goods and services financed through the Department Working Capital Fund which will impact the financial administration of the Fund.

(xvi) Exercise responsibility and authority for operating USDA's financial and subsidiary management systems and related administrative systems including: Departmentwide payroll and personnel information systems, statistics, administrative payments, billings and collections, and related reporting systems that are either requested by the agencies or required by the Department.

(xvii) Manage the National Finance Center (NFC).

(xviii) Provide management support services for the NFC, and by agreement with agency heads concerned, provide such services for other USDA tenants housed in the same facility. As used herein, such management support services shall include:

(A) Personnel services, as listed in § 2.24(a)(4)(x), and organizational support services, with authority to take actions required by law or regulation to perform such services.

(B) Procurement, property management, space management, communications, messenger, paperwork management, and related administrative services, with authority to take actions required by law or regulation to perform such services.

(xix) Exercise responsibility and authority for all matters related to the Department's accounting and financial operations including such activities as:

(A) Financial administration, including accounting and related activities.

(B) Reviewing financial aspects of agency operations and proposals.

(C) Furnishing consulting services to agencies to assist them in developing and maintaining accounting and financial management systems and internal controls, and for other purposes consistent with delegations in paragraph (a)(3)(xiii) of this section.

(D) Reviewing and monitoring agency implementation of Federal assistance policies.

(E) Reviewing and approving agencies' accounting systems documentation including related development plans, activities, and controls.

(F) Monitoring agencies' progress in developing and revising accounting and financial management systems and internal controls.

(G) Evaluating agencies' financial systems to determine the effectiveness of procedures employed, compliance with regulations, and the appropriateness of policies and practices.

(H) Promulgation of Department schedule of fees and charges for reproductions, furnishing of copies and making searches for official records pursuant to the Freedom of Information Act, 5 U.S.C. 552.

(I) Monitoring USDA implementation of section 5301 of the Anti-Drug Abuse Act of 1988 (21 U.S.C. 862) as it relates to grants, loans, and licenses.

(xx) Establish Department and approving component agency programs, policies, standards, systems, techniques and procedures to improve the management and operational efficiency

and effectiveness of the USDA including:

(A) Increased use of operations research and management science in the areas of productivity and management.

(B) All activities financed through the Department Working Capital Fund.

(xxi) Develop Departmental policies, standards, techniques, and procedures for the conduct of reviews and analysis of the utilization of the resources of State and local governments, other Federal agencies and of the private sector in domestic program operations.

(xxii) Represent the Department in contacts with OMB, General Services Administration, GAO, Department of the Treasury, Office of Personnel Management, Department of Health and Human Services, Department of Labor, Environmental Protection Agency, Department of Commerce, Congress of the United States, State and local governments, universities, and other public and private sector individuals, organizations or agencies on matters related to assigned responsibilities.

(xxiii) Establish policies related to travel by USDA employees.

(xxiv) Exercise responsibility for coordinating and overseeing the implementation of the Government Performance and Results Act of 1993, Public Law 103–62, at the Department.

(xxv) Provide budget, accounting, fiscal and related financial management services, with authority to take action required by law or regulation to provide such services for Working Capital Funds and general appropriated and trust funds for:

(A) The Secretary of Agriculture.

(B) The general officers of the Department, except the Inspector General.

(C) The offices and agencies reporting to the Assistant Secretary for Administration.

(D) Any other offices and agencies of the Department as may be agreed.

(xxvi) Develop, promulgate, and coordinate Department-wide policy concerning nonprocurement debarment and suspension.

(xxvii) Prepare and submit to Congress reports on conferences sponsored or held by the Department or attended by employees of the Department (7 U.S.C. 2255b).

(xxviii) *Related to budget formulation and program analysis.*

(A) Designate the Department's Budget Officer and exercise general responsibility and authority for all matters related to the Department's budgeting affairs including:

(*1*) Resource administration, including all phases of the acquisition, and distribution of funds and staff years.

(*2*) Legislative and regulatory reporting and related activities.

(B) Provide staff assistance for the Secretary, general officers, and other Department and agency officials.

(C) Formulate and promulgate Departmental budgetary, legislative and regulatory policies and procedures.

(D) Represent the Department in contacts with OMB, the GAO, the Department of the Treasury, Congressional Committees on Appropriations, and other organizations and agencies on matters related to his or her responsibility.

(E) Coordinate and/or conduct policy and program analyses on agency operations and proposals to assist the Secretary, general officers and other Department and agency officials in formulating and implementing USDA policies and programs.

(F) Review and analyze legislation, regulations, and policy options to determine their impact on USDA programs and policy objectives and on the Department's budget.

(G) Monitor ongoing studies with significant program or policy implications.

(4) *Related to human resources management.*

(i) Formulate and issue Department policy, standards, rules, and regulations relating to human resources management.

(ii) Provide human resources management procedural guidance and operational instructions.

(iii) Set standards for human resources data systems.

(iv) Inspect and evaluate human resources management operations and issue instructions or take direct action to insure conformity with appropriate laws, Executive Orders, Office of Personnel Management (OPM) rules and regulations, and other appropriate rules and regulations.

(v) Exercise final authority in all human resources matters, including individual cases, that involve the jurisdiction of more than one General Officer or agency head, or otherwise as deemed appropriate.

(vi) Receive, review, and recommend action on all requests for the Secretary's approval in human resources matters.

(vii) Authorize and make final decisions on adverse actions, except in those cases where the Assistant Secretary for Administration has participated.

(viii) Represent the Department in human resources matters in all contacts outside the Department.

(ix) Exercise specific authorities in the following operational matters:

(A) Waive repayment of training expenses where an employee fails to fulfill service agreement.

(B) Establish or change standards and plans for awards to private citizens.

(C) Execute, change, extend, or renew:

(*1*) Labor-Management Agreements.

(*2*) Certifications of supervisory/managerial and non-labor union employee and professional organizations or associations.

(D) Represent the Department in contacts with the national offices of labor organizations in fulfilling the Department's national consultation obligations under 5 U.S.C. 7113.

(E) Change a position (with no material change in duties) from one pay system to another.

(F) Grant restoration rights, and release employees with administrative reemployment rights.

(G) Authorize any mass dismissals of employees in the Washington, DC, metropolitan area.

(H) Approve "normal line of promotion" cases in the excepted service where not in accordance with time-in-grade criteria.

(I) Make the final decision on all classification appeals filed with the Department of Agriculture.

(J) Authorize all employment actions (except nondisciplinary separations and LWOP) and classification actions for senior level and equivalent positions including Senior Executive Service positions and special authority professional and scientific positions responsible for carrying out research and development functions.

(K) Authorize all employment actions (except LWOP) for the following positions:

(*1*) Schedule C.

(*2*) Non-career Senior Executive Service or equivalent.

(*3*) Administrative Law Judge.

(L) Authorize and make final decisions on adverse actions for positions in GS–1—15 or equivalent.

(M) Authorize and make final decisions on adverse actions for positions in the career Senior Executive Service or equivalent.

(N) Approve the details of Department employees to the White House.

(O) Authorize adverse actions based in whole or in part on an allegation of violation of 5 U.S.C. chapter 73, subchapter III, for employees in the excepted service.

(P) Authorize long-term training in programs which require Departmentwide competition.

(Q) Initiate and take adverse action in cases involving a violation of the merit system.

(R) Any other human resources operational matter.

(x) As used in this section, the term human resources includes:

(A) Position management.

(B) Position classification.

(C) Employment.

(D) Pay administration.

(E) Automation of human resources data and systems.

(F) Hours of duty.

(G) Performance management.

(H) Promotions.

(I) Employee development.

(J) Incentive Programs.

(K) Leave.

(L) Retirement.

(M) Human resources program management accountability and evaluation.

(N) Social security.

(O) Life insurance.

(P) Health benefits.

(Q) Unemployment compensation.

(R) Labor management relations.

(S) Intramanagement consultation.

(T) [Reserved]

(U) Discipline.

(V) Appeals.

(W) Drug Testing Program.

(X) Worklife Program.

(Y) Transit Subsidy Program.

(Z) Alternative Dispute Resolution.

(xi) Maintain, review, and update Departmental delegations of authority.

(xii) Authorize organizational changes.

(xiii) Formulate and promulgate departmental organizational objectives and policies.

(xiv) Approve coverage and waiver of individual law enforcement and firefighter positions under the special retirement provisions of the Civil Service Retirement System and the Federal Employees Retirement System.

(xv) Provide for diversity and inclusion, as follows:

(A) Establish, direct, and provide policy and oversight for a Departmentwide Special Emphasis Program (SEP) including: Women, African Americans, Hispanics, Asian/Pacific Islanders, Native Americans, Disabled, and Gay/Lesbian/Bisexual/Transgender.

(B) Provide oversight and support for Departmental SEP recognition programs.

(C) Direct and oversee the Department-wide SEPM Council.

(D) Administer Federal Equal Opportunity Recruitment Program.

(xvi) Oversee and manage the Department's administrative grievance program.

(xvii) Make final decisions in those cases where an agency head has appealed the recommended decision of a grievance examiner.

(xviii) Administer the administrative appeals process related to the inclusion of positions in the testing designated position listing in the Department's Drug-Free Workplace Program and designate the final appeal officer for that Program.

(xix) Formulate and issue Department policy, standards, rules, and regulations relating to the Senior Scientific Research Service (7 U.S.C. 7657).

(xx) *Related to conflict management.*

(A) Designate the senior official to serve as the Department Dispute Resolution Specialist under the Administrative Dispute Resolution Act of 1996, 5 U.S.C. 571, *et seq.,* and provide leadership, direction and coordination for the Department's conflict prevention and resolution activities.

(B) Issue Departmental regulations, policies, and procedures relating to the use of Alternative Dispute Resolution (ADR) to resolve employment complaints and grievances, workplace disputes, Departmental program disputes, and contract and procurement disputes.

(C) Provide ADR services for:

(*1*) The Secretary of Agriculture.

(*2*) The general officers of the Department.

(*3*) The offices and agencies reporting to the Assistant Secretary for Administration.

(*4*) Any other office or agency of the Department as may be agreed.

(D) Develop and issue standards for mediators and other ADR neutrals utilized by the Department.

(E) Coordinate ADR activities throughout the Department.

(F) Monitor agency ADR programs and report at least annually to the Secretary on the Department's ADR activities.

(xxi) Redelegate, as appropriate, any authority delegated under paragraphs (a)(4)(i) through (a)(4)(xx) to general officers of the Department and heads of Departmental agencies.

(xxii) *Related to ethics.* Provide administrative supervision for the Office of Ethics.

(5) *Related to small and disadvantaged business utilization.*

(i) In compliance with Public Law 95–507, the Assistant Secretary for Administration is designated as the Department's Director for Small and Disadvantaged Business Utilization. The Director of Small and Disadvantaged Business Utilization has specific responsibilities under the Small Business Act, 15 U.S.C. 644(k). These duties include being responsible for the following:

(A) Administer the Department's small and disadvantaged business activities related to procurement contracts, minority bank deposits, and grants and loan activities affecting small and minority businesses including women-owned business, and the small business, small minority business and small women-owned business subcontracting programs.

(B) Provide Departmentwide liaison and coordination of activities related to small, small disadvantaged, and women-owned businesses with the Small Business Administration and others in public and private sector.

(C) Develop policies and procedures required by the applicable provision of the Small Business Act, as amended, to include the establishment of goals.

(D) Implement and administer programs described under sections 8 and 15 of the Small Business Act, as amended (15 U.S.C. 637 and 644).

(E) In compliance with the Veterans Benefits Act of 2003 (Pub. L. 108–183) amending the Small Business Act, implement and administer procurement programs for small business concerns owned and controlled by service-disabled veterans.

(ii) In compliance with the Javits-Wagner-O'Day Act (41 U.S.C. 46 *et seq.*), implement and administer the Department's AbilityOne program for purchases from qualified nonprofit agencies for the blind or for the severely disabled.

(6) *Related to procurement and property management.*

(i) Exercise full Departmentwide contracting and procurement authority.

(ii) Promulgate policies, standards, techniques, and procedures, and represent the Department, in the following:

(A) Acquisition, including, but not limited to, the procurement of supplies, services, equipment, and construction.

(B) Socioeconomic programs relating to contracting.

(C) Selection, standardization, and simplification of program delivery processes utilizing contracts.

(D) Acquisition, leasing, utilization, value analysis, construction, maintenance, and disposition of real and personal property, including control of space assignments.

(E) Motor vehicle and aircraft fleet and other vehicular transportation.

(F) Transportation of things (traffic management).

(G) Prevention, control, and abatement of pollution with respect to Federal facilities and activities under the control of the Department (Executive Order 12088, "Federal Compliance With Pollution Control Standards," 3 CFR, 1978 Comp., p. 243).

(H) Implementation of the Uniform Relocation Assistance and Real Property

Acquisition Policies Act of 1970 (42 U.S.C. 4601, *et seq.*).

(I) Development and implementation of sustainable operations actions including establishing and achieving greenhouse gas emission reduction goals, reducing energy intensity, increasing renewable energy use, increasing water efficiency, reducing petroleum use and increasing alternative fuel use, increasing recycling and waste diversion, preventing pollution, reducing use of toxic chemicals, procuring sustainable products and services, achieving sustainable principles for new and existing buildings, promoting electronic stewardship, and continuing environmental management system use. Maintain liaison with the Office of the Federal Environmental Executive, the Council on Environmental Quality, the Office of Management and Budget (OMB), the Department of Energy, and other Government agencies in these matters.

(J) Implementation of a program for the Federal procurement of biobased products and of a voluntary "USDA Certified Biobased Product" labeling program (7 U.S.C. 8102).

(K) Entering into cooperative agreements to further research programs in the food and agricultural sciences, related to establishing and implementing Federal biobased procurement and voluntary biobased labeling programs (7 U.S.C. 3318).

(L) Implementation of the policies and procedures set forth in OMB Circular No. A–76, Performance of Commercial Activities.

(iii) Exercise the following special authorities:

(A) Designate the Departmental Debarring Officer to perform the functions of 48 CFR part 9, subpart 9.4 related to procurement activities, except for commodity acquisitions on behalf of the Commodity Credit Corporation (7 CFR part 1407); with authority to redelegate suspension and debarment authority for contracts awarded under the School Lunch and Surplus Removal Programs (42 U.S.C. 1755 and 7 U.S.C. 612c).

(B) Conduct liaison with the Office of the Federal Register (1 CFR part 16) including the making of required certifications pursuant to 1 CFR part 18.

(C) Maintain custody and permit appropriate use of the official seal of the Department.

(D) Establish policy for the use of the official flags of the Secretary and the Department.

(E) Coordinate collection and disposition of personal property of historical significance.

(F) Make information returns to the Internal Revenue Service as prescribed by 26 U.S.C. 6050M and by 26 CFR 1.6050M–1 and such other Treasury regulations, guidelines or procedures as may be issued by the Internal Revenue Service in accordance with 26 U.S.C. 6050M. This includes making such verifications or certifications as may be required by 26 CFR 1.6050M–1 and making the election allowed by 26 CFR 1.6050M–1(d)(5)(1).

(G) Promulgate regulations for the management of contracting and procurement for information technology and telecommunication equipment, software, services, maintenance and related supplies.

(H) Represent the Department in working with the Government Accountability Office (GAO), the General Services Administration, OMB, and other organizations or agencies on matters related to assigned responsibilities.

(iv) Serve as the Acquisition Executive in the Department to integrate and unify the management process for the Department's major system acquisitions and to monitor implementation of the policies and practices set forth in OMB Circular No. A–109, Major Systems Acquisitions. This includes the authority to:

(A) Ensure that OMB Circular No. A–109 is effectively implemented in the Department and that the management objectives of the Circular are realized.

(B) Review the program management of each major system acquisition.

(C) Designate the program manager for each major systems acquisition.

(D) Designate any Departmental acquisition as a major system acquisition under OMB Circular No. A–109.

(v) Pursuant to Executive Order 12931, "Federal Procurement Reform," 3 CFR, 1994 Comp., p. 925, and sections 16, 22, and 37 of the Office of Federal Procurement Policy Act, as amended, 41 U.S.C. 414, 418b, and 433, designate the Senior Procurement Executive for the Department and delegate responsibility for the following:

(A) Prescribing and publishing Departmental acquisition policies, advisories, regulations, and procedures.

(B) Taking any necessary actions consistent with policies, regulations, and procedures with respect to purchases, contracts, leases, agreements, and other transactions.

(C) Designating contracting officers.

(D) Establishing clear lines and limitations of contracting authority through written delegations of authority.

(E) Approving any Departmental and component agency procurement systems and processes.

(F) Managing and enhancing career development of the Department's acquisition workforce.

(G) Participating in the development of Governmentwide procurement policies, regulations, and standards, and determining specific areas where Governmentwide performance standards should be established and applied.

(H) Developing unique Departmental standards as required.

(I) Overseeing the development of procurement goals, guidelines, and innovation.

(J) Measuring and evaluating procurement office performance against stated goals.

(K) Advising the Secretary whether goals are being achieved.

(L) Prescribing standards for agency Procurement Executives.

(M) Redelegating, suspending, or revoking, as appropriate, the authority in paragraph (a)(6)(v)(A) of this section to agency Procurement Executives or other qualified agency officials with no power of further redelegation.

(N) Redelegating, suspending, or revoking, as appropriate, the authorities in paragraphs (a)(6)(v)(B), (C), (D), (F), and (G) of this section to agency Procurement Executives or other qualified agency officials with the power of further redelegation.

(vi) Represent the Department in establishing standards for acquisition transactions within the electronic data interchange environment.

(vii) Designate the Departmental Task Order Ombudsman pursuant to 41 U.S.C. 253j.

(viii) Designate the Departmental Remedy Coordination Official pursuant to 41 U.S.C. 255 to determine whether payment to any contractor should be reduced or suspended based on substantial evidence that the request of the contractor for advance, partial, or progress payment is based on fraud.

(ix) Review and approve exemptions for USDA contracts, subcontracts, grants, agreements, and loans from the requirements of the Clean Air Act, as amended (42 U.S.C. 7401, *et seq.*), the Federal Water Pollution Control Act, as amended (33 U.S.C. 1251, *et seq.*), and Executive Order 11738, "Providing for Administration of the Clean Air Act and the Federal Water Pollution Control Act With Respect to Federal Contracts, Grants, or Loans," 3 CFR, 1971–1975 Comp., p. 799, when he or she determines that the paramount interest of the United States so requires as provided in these acts and Executive

Order and the regulations of the EPA (2 CFR 1532.1140).

(x) Transfer excess research equipment to eligible educational institutions or certain non-profit organizations for the conduct of technical and scientific education and research activities under section 11(i) of the Stevenson-Wydler Technology Innovation Act of 1980 (15 U.S.C. 3710(i)) (7 CFR part 2812).

(xi) Promulgate policy and obtain and furnish Federal excess personal property in accordance with section 923 of Public Law 104–127 (7 U.S.C. 2206a), to support research, educational, technical and scientific activities or for related programs, to:

(A) Any 1994 Institutions (as defined in section 532 of the Equity in Educational Land-Grant Status Act of 1994 (Pub. L. 103–382; 7 U.S.C. 301 note)).

(B) Any Institutions eligible to receive funds under the Act of August 30, 1890 (7 U.S.C. 321, *et seq.*) including Tuskegee University.

(C) Any Hispanic-serving Institutions (as defined in sections 316(b) of the Higher Education Act of 1965 (20 U.S.C. 1059c(b)).

(xii) Make available to organizations excess or surplus computers or other technical equipment of the Department for the purpose of distribution to cities, towns, or local government entities in rural areas (7 U.S.C. 2206b).

(xiii) Issue regulations and directives to implement or supplement the Federal Acquisition Regulations (48 CFR Chapters 1 and 4).

(xiv) Issue regulations and directives to implement or supplement the Federal Property Management Regulations (41 CFR chapter 101) and the Federal Management Regulation (41 CFR chapter 102).

(xv) Serve as USDA Senior Sustainability Officer under Executive Order 13514, "Federal Leadership in Environmental, Energy, and Economic Performance" (74 FR 52117, Oct. 8, 2009) responsible for developing and achieving greenhouse gas emission reduction targets, developing and implementing a Strategic Sustainability Performance Plan, achieving sustainable practice goals in Executive Order 13423, "Strengthening Federal Environmental, Energy, and Transportation Management," 3 CFR, 2007 Comp., p. 191, and reporting USDA's progress to OMB and the Council on Environmental Quality.

(xvi) Pursuant to the Office of Federal Procurement Policy Act (Act), as amended (41 U.S.C. 401, *et seq.*), designate the Department's Advocate for Competition with the responsibility for section 20 of the Act (41 U.S.C. 418), including:

(A) Reviewing the procurement activities of the Department.

(B) Developing new initiatives to increase full and open competition.

(C) Developing goals and plans and recommending actions to increase competition.

(D) Challenging conditions unnecessarily restricting competition in the acquisition of supplies and services.

(E) Promoting the acquisition of commercial items.

(F) Designating an Advocate for Competition for each procuring activity within the Department.

(xvii) *Related to compliance with environmental laws and sustainable operating requirements.*

(A) Serve as Chair of the USDA Sustainable Operations Council.

(B) Represent USDA in consulting or working with the EPA, the Council on Environmental Quality, the Domestic Policy Council, and others to develop policies relating to hazardous materials management and Federal facilities compliance with applicable pollution control laws.

(C) Monitor, review, evaluate, and oversee hazardous materials management program activities and compliance Department-wide.

(D) Monitor, review, evaluate, and oversee USDA agency expenditures for hazardous materials management program accomplishments.

(E) Represent USDA on the National Response Team and exercise responsibility for USDA response efforts for hazardous substance releases and oil spills pursuant to the Comprehensive Environmental Response, Compensation, and Liability Act of 1980, as amended (42 U.S.C. 9601, *et seq.*); the Clean Water Act, as amended (33 U.S.C. 1251, *et seq.*); Oil Pollution Act, as amended (33 U.S.C. 2701, *et seq.*); Executive Order 12580, "Superfund Implementation," 3 CFR, 1987 Comp., p. 193; Executive Order 12777, "Implementation of section 311 of the Federal Water Pollution Control Act of October 18, 1972, as amended, and the Oil Pollution Act of 1990," 3 CFR, 1991 Comp., p. 351, and the National Oil and Hazardous Substances Contingency Plan, 40 CFR Part 300.

(F) Approve disbursements from the New World Mine Response and Restoration Account, approve the New World Mine Response and Restoration Plan, and make quarterly reports to Congress under Sections 502(d) and (f) of Title V of the Department of the Interior and Related Agencies Appropriations Act of 1998, Public Law 105–83.

(G) Ensure that the Hazardous Materials Management Program Department-wide is accomplished with regard to, and in compliance with, Executive Order 12898, "Federal Actions to Address Environmental Justice in Minority Populations and Low-Income Populations," 3 CFR, 1994 Comp. p. 859.

(H) Take such action as may be necessary, with the affected agency head and with the concurrence of the General Counsel, including issuance of administrative orders and agreements with any person to perform any response action under sections 106(a) and 122 (except subsection (b)(1)) of the Comprehensive Environmental Response, Compensation, and Liability Act of 1980, as amended (42 U.S.C. 9606(a), 9622), pursuant to sections 4(c)(3) and 4(d)(3) of Executive Order 12580, "Superfund Implementation," 3 CFR, 1987 Comp., p. 193, as amended by Executive Order 13016, "Amendment to Executive Order No. 12580," 3 CFR, 1996 Comp., p. 214.

(I) Represent USDA on the EPA Brownfields Federal Partnership and coordinate USDA support for Brownfields redevelopment and establish policy and guidance for the implementation of the June 2003 amendment to Executive Order 12580, "Superfund Implementation," 3 CFR, 1987 Comp., p. 193 (Executive Order 13308, "Further Amendment to Executive Order 12580, As Amended, Superfund Implementation," 3 CFR, 2003 Comp., p. 239).

(xviii) *Related to occupational safety and health.*

(A) Establish Departmentwide safety and health policy and provide leadership in the development, coordination, and implementation of related standards, techniques, and procedures, and represent the Department in complying with laws, Executive Orders and other policy and procedural issuances related to occupational safety and health and workers' compensation programs within the Department.

(B) Represent the Department in all rulemaking, advisory, or legislative capacities on any groups, committees, or Governmentwide activities that affect the Department's Occupational Safety and Health Management Program; and serve as the USDA Designated Safety and Health Official.

(C) Determine and provide Departmentwide technical services and regional staff support for the safety and health programs.

(D) Administer the computerized management information systems for the collection, processing and

dissemination of data related to the Department's occupational safety and health programs.

(E) Administer the Department's Occupational Health and Preventive Medicine Program, as well as design and operate employee assistance and workers' compensation activities.

(F) Provide education and training on a Departmentwide basis for safety and health-related issues and develop resource and operational manuals.

(7) *Related to advocacy and outreach.*

(i) Ensure that small farms and ranches, beginning farmers or ranchers, and socially disadvantaged farmers or ranchers have access to, and equitable participation in, programs and services of the Department pursuant to section 226B(c) of the Department of Agriculture Reorganization Act of 1994 (7 U.S.C. 6934(c)).

(ii) Oversee the Advisory Committee for Beginning Farmers and Ranchers.

(iii) Oversee the operations of the Office of Small Farms Coordination.

(iv) Administer section 2501 of the Food, Agriculture, Conservation, and Trade Act of 1990 (7 U.S.C. 2279), except for authorities related to the Census of Agriculture and economic studies in subsection (h) of that section.

(v) Establish and oversee the Minority Farmer Advisory Committee pursuant to section 14008 of FCEA (7 U.S.C. 2279 note).

(vi) Administer the low-income migrant and seasonal farmworker grants program under section 2281 of the Food, Agriculture, Conservation, and Trade Act of 1990 (42 U.S.C. 5177a).

(vii) Consult with appropriate entities regarding integration of farmworker interests into Department programs, including assisting farmworkers in becoming agricultural producers or landowners, and research, program improvements, and agricultural education opportunities for low-income and migrant seasonal farmworkers.

(viii) Administer the grants program under section 14204 of FCEA (7 U.S.C. 2008q–1) to improve the supply, stability, safety, and training of the agricultural labor force.

(ix) Administer and coordinate a USDA outreach program in collaboration with USDA agencies.

(x) Administer section 2501A of the Food, Agriculture, Conservation, and Trade Act of 1990 (7 U.S.C. 2279–1), including the authority to coordinate Department policy for the issuance of receipts under subsection (e) of that section.

(xi) Provide strategic planning and performance measurement, coordinate outreach activities, monitor goals and objectives, and evaluate programs, of Department programs and activities involving small farms or ranches and beginning or socially disadvantaged farmers or ranchers.

(xii) Administer the USDA/1994 Land Grant Institutions (Tribal Colleges) Programs.

(xiii) Administer the USDA/1890 Liaison Officer Program.

(xiv) Administer the Hispanic Serving Institutions National Program.

(8) *Related to homeland security, personnel and document security, and emergency coordination.*

(i) Provide administrative supervision to the unit that grants, denies, or revokes security clearances for USDA employees and contractors.

(ii) Administer the Department Emergency Preparedness Program. This includes:

(A) Coordinate the delegations and assignments made to the Department under the Defense Production Act of 1950, 50 U.S.C. App. 2061, *et seq.;* the Robert T. Stafford Disaster Relief and Emergency Assistance Act, 42 U.S.C. 5121, *et seq.;* and by Executive Orders 12148, "Federal Emergency Management," 3 CFR, 1979 Comp., p. 412, 12919, "National Defense Industrial Resources Preparedness," 3 CFR, 1994 Comp., p. 901, and 12656, "Assignment of Emergency Preparedness Responsibilities," 3 CFR, 1988 Comp., p. 585; or any successor to these Executive Orders, to ensure that the Department has sufficient capabilities to respond to any occurrence, including natural disaster, military attack, technological emergency, or any all hazards incident.

(B) Manage the Department Emergency Operations Center at Headquarters and the Secretary's alternative facilities; provide senior staff with international, national, and regional situational awareness reports; and provide and maintain current information systems technology and National Security Systems to support USDA executive crisis management capability.

(C) Provide facilities and equipment to facilitate inter-agency coordination during emergencies.

(D) Activate the USDA incident management system in accordance with the National Response Framework and the National Incident Management System in the event of a major incident; and provide oversight and coordination of the Department's Emergency Support Functions as outlined in the National Response Framework.

(E) Develop and promulgate policies for the Department regarding emergency preparedness and national security, including matters relating to anti-terrorism and agriculture-related emergency preparedness planning both national and international, and guidance to USDA State and County Emergency Boards.

(F) Establish and provide oversight of a Department-wide training program for the National Incident Management System to include Incident Command System, National Response Framework, Continuity programs, and Critical Infrastructure Protection program.

(G) Provide representation and liaison for the Department in contacts with other Federal entities and organizations, including the National Security Council, Homeland Security Council, Office of Management and Budget, Department of Homeland Security, Federal Emergency Management Agency, Office of The Director of National Intelligence, and Department of Defense concerning matters of a national security, natural disaster, other emergencies, and agriculture/food-related international civil emergency planning and related activities.

(H) Act as the primary USDA representative for anti-terrorism activities.

(I) Develop and submit a coordinated budget request for homeland security requirements.

(J) Provide guidance and direction regarding radiological emergency preparedness programs and the implementation of the National Response Framework's Nuclear/Radiological Incident Annex to Departmental staff offices, mission areas, and agencies.

(K) Provide program leadership and coordination for USDA's radiological emergency preparedness requirements with respect to Emergency Management and Assistance (44 CFR parts 350–352).

(L) Represent USDA on the Federal Radiological Preparedness Coordinating Committee (FRPCC) and Regional Assistance Committees (RACs) and assist them in carrying out their functions.

(M) Support USDA in its management of the Department's emergency response program with respect to radiological emergency response activities.

(iii) Provide for the personal security to the Secretary and the Deputy Secretary.

(iv) Serve as the primary point of contact for Government Accountability Office (GAO) and Office of the Inspector General (OIG) audits of USDA homeland security activities.

(v) Coordinate interaction between Department agencies and private sector businesses and industries in emergency planning and public education under Department authorities delegated or assigned under the National Response

Framework, National Infrastructure Protection Plan, Defense Production Act of 1950, 50 U.S.C. App. 2061, *et seq.,* and Robert T. Stafford Disaster Relief and Emergency Assistance Act, 42 U.S.C. 5121, *et seq.*

(vi) Oversee the Department's ability to collect and disseminate information and prepare for an agricultural disease emergency, agroterrorist act, or other threat to agricultural biosecurity, and coordinate such activities among agencies and offices within the Department (7 U.S.C. 8912).

(vii) Administer a funded competitive grant program to support the development and expansion of advanced training programs in agricultural biosecurity planning and response for food science professionals and veterinarians; administer a funded competitive grant and low-interest loan assistance program to assist States in assessing agricultural disease response capability (7 U.S.C. 8913).

(viii) Promulgate Departmental policies, standards, techniques, and procedures; and represent the Department in maintaining the security of physical facilities and providing security guidance to the Food and Agricultural Sector nationwide.

(A) Lead and coordinate the development and maintenance of a mission critical facility inventory with agency involvement to ensure proper security countermeasures are implemented in the Department's most critical infrastructure.

(B) Provide guidance to USDA agencies in matters of physical security through use of physical security assessments and development of mitigation strategies.

(C) Provide guidance to USDA agencies and the Food and Agricultural Sector in matters of security through use of assessments and development of mitigation strategies.

(D) Represent and act as liaison for the Department in contacts with other Federal security entities and organizations, including the Interagency Security Committee and the Department of Homeland Security.

(E) Provide guidance and direction to ensure physical security and agriculture/food security are fully integrated in USDA's security preparations, which are reported to and coordinated with the White House.

(F) Provide assistance to the USDA agencies in preparation for and during a disaster to identify critical assets and possible alternate storage locations.

(G) Conduct physical security investigations and compliance reviews Department-wide.

(H) Review and provide coordinated technical physical security assessments for all new construction of laboratories, data centers, germplasm repositories, and other mission critical infrastructure during the design phase, and all leased facilities prior to contract award.

(I) Oversee and manage physical security aspects of the Common Identification Card (LincPass) Program to ensure National Institute of Standards and Technology (NIST) and General Services Administration (GSA) compliancy within the National Capital Region and the physical access to USDA facilities.

(J) Provide enterprise connectivity to agency physical access control systems that provide cost leveraging and provisioning/de-provisioning nationwide.

(ix) Provide oversight and coordination of the development and administration of the Department Continuity Program. This includes:

(A) Provide guidance and direction regarding continuity of operations to the Office of the Secretary, Departmental staff offices, mission areas, and agencies.

(B) Represent and act as liaison for the Department in contacts with other Federal entities and organizations concerning matters of assigned continuity program responsibilities.

(C) Oversee Department continuity of operations and emergency relocation facility planning, development, equipping, and preparedness to ensure that resources are in a constant state of readiness.

(x) Provide for the development and administration of a Public Trust program for the safeguarding of national security information:

(A) Direct and administer USDA's public trust program established pursuant to 5 CFR part 731 and Executive Order 13488, "Granting Reciprocity on Excepted Service and Federal Contractor Employee Fitness and Reinvestigating Individuals in Positions of Public Trust" (74 FR 4111, Jan. 22, 2009).

(B) Direct and administer USDA's program under which information is safeguarded pursuant to Executive Order 13526, "Classified National Security Information" (75 FR 707, Jan. 5, 2010), or subsequent orders.

(C) Establish and maintain Information Security policies and procedures for classifying, declassifying, safeguarding, and disposing of classified national security information and materials.

(D) Investigate or delegate authority to investigate any potential compromises of classified national security information and take corrective action for violations or infractions under section 5.5(b) of Executive Order 13526 or any subsequent order.

(E) Develop and maintain oversight of all facilities throughout USDA where classified national security information is or will be safeguarded, discussed, or processed including sole authority to liaison with the Central Intelligence Agency concerning guidance, approval, requirements, and oversight of USDA secure facilities.

(F) Act as the USDA focal point to identify, receive, disseminate and safeguard USDA related intelligence information as required; convey information to USDA policy officials; and liaise with the intelligence community, as appropriate.

(xi) Control within USDA the acquisition, use, and disposal of material and equipment that can be a source of ionizing radiation.

(A) Promulgate policies and procedures for ensuring the safety of USDA employees, the public, and the environment resulting from USDA's use of ionizing radiation sources.

(B) Maintain and ensure compliance with the Nuclear Regulatory Commission regulations (Title 10, Code of Federal Regulations) and license(s) issued to USDA for the acquisition, use, and disposal of radioactive materials.

(9) *Related to operations support to the Department of Agriculture headquarters complex, George Washington Carver Center, and leased facilities in the Washington metro area.*

(i) Provide services relating to facilities management and daily operational support for agencies and offices occupying USDA's headquarters complex, George Washington Carver Center, and, in coordination with the General Services Administration (GSA), USDA leased facilities in the Washington, DC metropolitan area, as well as at emergency relocation sites and certain critical facilities specified by the Assistant Secretary for Administration in the following areas:

(A) Acquiring, leasing, utilizing, constructing, maintaining, and disposing of real property, including control of space assignments, and architecture and engineering design oversight.

(B) Sustainable Operations leadership and management in the areas of internal energy efficiency, conservation and recycling in support of Executive Orders 13423, "Strengthening Federal Environmental, Energy, and Transportation Management," 3 CFR, 2007 Comp., p. 193, and 13514, "Federal Leadership in Environmental, Energy,

and Economic Performance" (74 FR 52117, Oct. 8, 2009).

(C) Occupational health, safety, and related functions; and environmental compliance pursuant to Executive Order 12088, "Federal Compliance with Pollution Control Standards," 3 CFR, 1978 Comp., p. 243, to ensure actions are taken for the prevention, control, and abatement of environmental pollution.

(ii) Provide centralized Departmental business services including:

(A) Printing, copy reproducing, offset composing, mail management and delivery, and automated mailing lists.

(B) USDA Nationwide mail management policy.

(C) Operation of a disability resource center for all USDA agencies in the Washington, DC metropolitan area and nationwide in the areas of accessible technologies and reasonable accommodations.

(D) General supplies, shipping and receiving, warehouse and labor services.

(E) Operation of a USDA Consolidated Forms and Publications Distribution Center for storage and nationwide distribution of USDA program forms and publications.

(F) Excess personal property operations with disposition responsibility for all USDA agencies in the Washington, DC metropolitan area.

(G) Operation of a GSA authorized Federal excess property Sales Center for USDA property and other government agencies in the Washington, DC metropolitan area via Memorandum of Understanding (MOU).

(iii) Promulgate Departmental regulations, standards, techniques, and procedures and represent the Department in managing and maintaining a comprehensive physical and technical security program including access control, management of special police officer and guard services, executive driving, parking, ID badging in accordance with HSPD–12, occupant emergency and warden services at the USDA Headquarters Complex, George Washington Carver Center and, in coordination with GSA, USDA leased facilities in the Washington, DC metropolitan area, as well as at emergency relocation sites and certain critical facilities specified by the Assistant Secretary for Administration.

(iv) Provide management and oversight of the Secretary's People's Garden initiative and the USDA Visitor's Center for education and outreach to USDA and the public.

(v) Represent the Department in contacts with other organizations or agencies on matters related to assigned responsibilities.

(10) *Related to Secretarial correspondence.*

(i) Exercise responsibility for all correspondence control and related records management functions for the Office of the Secretary.

(ii) Provide administrative, editorial, and project management support services to the Immediate Office of the Secretary.

(11) *Related to shared management services.*

(i) Provide a full range of services, including: Procurement of supplies, services, and equipment; travel support, conference management, general administrative support including coordination of office renovations and moves (within USDA Whitten Building); budget, accounting, fiscal, and related financial management services; information technology services related to end user office automation, desktop computers, enterprise networking support, handheld devices and voice telecommunications; with authority to take actions required by law or regulation to perform said services for:

(A) The Secretary of Agriculture.

(B) The general officers of the Department, except the Inspector General.

(C) The offices and agencies reporting to the Assistant Secretary for Administration.

(D) Any other offices or agencies of the Department as may be agreed.

(ii) Prepare responses to requests under the Freedom of Information Act with authority to take actions as required by law or regulation for the offices and agencies reporting to the Assistant Secretary for Administration.

(iii) Administer the records management program in support of Departmental Management, and prepare and coordinate responses to management audits by the Inspector General and the Government Accountability Office with authority to take actions as required by law or regulation for the offices and agencies reporting to the Assistant Secretary for Administration.

(iv) Provide administrative and financial management support in the award and administration of grants, cooperative agreements, and Memoranda of Understanding in support of Departmental Management programs, with authority to take actions as required by law or regulation for the offices and agencies reporting to the Assistant Secretary for Administration.

(v) Provide human resources operational services for the following (with the exception of Senior Executives, Senior Level positions, and Political Appointees):

(A) The Secretary of Agriculture.

(B) The general officers of the Department.

(C) The offices and agencies reporting to the Assistant Secretary for Administration.

(D) Any other offices and agencies of the Department as may be agreed.

(12) *Related to Office of Administrative Law Judges.*

(i) Assign, after appropriate consultation with other general officers, to the Office of Administrative Law Judges proceedings not subject to 5 U.S.C. 556 and 557, involving the holdings of hearings and performance of related duties pursuant to the applicable rules of practice, when the Assistant Secretary for Administration determines that because of the nature of the proceeding it would be desirable for the proceeding to be presided over by an Administrative Law Judge and that such duties and responsibilities would not be inconsistent with those of an Administrative Law Judge.

(ii) Provide administrative supervision of the Office of Administrative Law Judges.

(iii) Maintain overall responsibility and control over the Hearing Clerk's activities which include the custody of and responsibility for the control, maintenance, and servicing of the original and permanent records of all USDA administrative proceedings conducted under the provisions of 5 U.S.C. 556 and 557:

(A) Receiving, filing and acknowledging the receipt of complaints, petitions, answers, briefs, arguments, and all other documents that may be submitted to the Secretary or the Department of Agriculture in such proceedings.

(B) Receiving and filing complaints, notices of inquiry, orders to show cause, notices of hearing, designations of Administrative Law Judges or presiding officers, answers, briefs, arguments, orders, and all other documents that may be promulgated or issued by the Secretary or other duly authorized officials of the Department of Agriculture in such proceedings.

(C) Supervising the service upon the parties concerned of any documents that are required to be served, and where required, preserving proof of service.

(D) Keeping a docket record of all such documents and proceedings.

(E) Filing a stenographic record of each administrative hearing where a transcript is required.

(F) Preparing for certification and certifying under the Secretary's

facsimile signature, material on file in the Hearing Clerk's office.

(G) Performing any other clerical duties with respect to the documents relative to such proceedings as may be required to be performed.

(H) Cooperating with the Office of Operations in the letting of contracts for stenographic and reporting services; and forwarding vouchers to appropriate agencies for payment.

(I) Receiving and compiling data, views or comments filed in response to notices of proposed standards or rules or regulations.

(J) Performing upon request the following services with respect to any hearings in such proceedings:

(*1*) Arranging for suitable hearing place.

(*2*) Arranging for stenographic reporting of hearings and handling details in connection therewith.

(13) *Other general.*

(i) Administer the debarment authorities in section 14211 of the Food, Conservation, and Energy Act of 2008 (7 U.S.C. 2209j).

(ii) [Reserved]

(b) The following authorities are reserved to the Secretary of Agriculture:

(1) *Related to financial systems and budget formulation and execution.*

(i) Final approval of the Department's program and financial plans.

(ii) [Reserved]

(2) *Related to human resources management.* Make final determinations in the following areas:

(i) Separation of employees for security reasons.

(ii) Restoration to duty of employees following suspension from duty for security reasons.

(iii) Reinstatement or restoration to duty or the employment of any person separated for security reasons.

(iv) Issuance of temporary certificates to occupy sensitive positions.

§ 2.25 [Removed]

■ 10. Remove § 2.25.

Subpart D—Delegations of Authority to Other General Officers and Agency Heads

§ 2.26 [Removed]

■ 11. Remove § 2.26.

■ 12. Amend § 2.27 by revising paragraph (b) introductory text and paragraph (b)(2), to read as follows:

§ 2.27 Office of Administrative Law Judges.

* * * * *

(b) The Chief Administrative Law Judge is delegated the following administrative responsibilities subject to the guidance and control of the Assistant Secretary for Administration (*See* § 2.24(a)(12)):

* * * * *

(2) Direct the functions of the Hearing Clerk as set out in § 2.24(a)(12)(iii).

§ 2.28 [Removed]

■ 13. Remove § 2.28.

§ 2.30 [Removed]

■ 14. Remove § 2.30.

§ 2.32 [Removed]

■ 15. Remove § 2.32.

■ 16. Amend § 2.35 as follows:

■ a. Revise paragraphs (a)(9) and (a)(10); and

■ b. Add new paragraphs (a)(11), (a)(12), and (a)(13), to read as follows:

§ 2.35 Judicial Officer.

(a) * * *

(9) Act as final deciding officer in adjudicatory proceedings under section 359i of the Agricultural Adjustment Act of 1938, as amended (7 U.S.C. 1359ii);

(10) Issue rules of practice applicable to proceedings conducted under section 359i of the Agricultural Adjustment Act of 1938, as amended (7 U.S.C. 1359ii);

(11) Act as final deciding officer in adjudicatory proceedings subject to the "Rules of Practice Governing Proceedings on Petitions To Modify or To Be Exempted From Marketing Orders" set forth in sections 900.50 through 900.71 of this title;

(12) Act as final deciding officer in adjudicatory proceedings subject to the "Rules of Practice Governing Proceedings on Petitions to Modify or To Be Exempted from Research, Promotion, and Information Programs" set forth in part 1200, subpart B, of this title; and

(13) Act as final deciding officer in adjudicatory proceedings subject to "Appeals of Quality Control ('QC') Claims" set forth in part 283 of this title.

* * * * *

§ 2.37 [Removed]

■ 17. Remove § 2.37.

Subpart F—Delegations of Authority by the Under Secretary for Farm and Foreign Agricultural Services

■ 18. Amend § 2.42 by revising paragraph (a)(55) to read as follows:

§ 2.42 Administrator, Farm Service Agency.

(a) * * *

(55) In coordination with the Director, Office of Advocacy and Outreach, issue receipts under section 2501A(e) of the Food, Agriculture, Conservation, and Trade Act of 1990 (7 U.S.C. 2279–1(e)).

* * * * *

Subpart G—Delegations of Authority by the Under Secretary for Rural Development

■ 19. Revise § 2.45 to read as follows:

§ 2.45 Deputy Under Secretary for Rural Development.

Pursuant to § 2.17(a), subject to reservations in § 2.17(b), and subject to policy guidance and direction by the Under Secretary, the following delegation of authority is made to the Deputy Under Secretary for Rural Development, to be exercised only during the absence or unavailability of the Under Secretary: Perform all the duties and exercise all the powers which are now or which may hereafter be delegated to the Under Secretary for Rural Development.

■ 20. Amend § 2.47 by revising paragraph (a)(16), to read as follows:

§ 2.47 Administrator, Rural Utilities Service.

(a) * * *

(16) In coordination with the Director, Office of Advocacy and Outreach, issue receipts under section 2501A(e) of the Food, Agriculture, Conservation, and Trade Act of 1990 (7 U.S.C. 2279–1(e)).

* * * * *

■ 21. Amend § 2.48 by revising paragraph (a)(32), to read as follows:

§ 2.48 Administrator, Rural Business-Cooperative Service.

(a) * * *

(32) In coordination with the Director, Office of Advocacy and Outreach, issue receipts under section 2501A(e) of the Food, Agriculture, Conservation, and Trade Act of 1990 (7 U.S.C. 2279–1(e)).

* * * * *

■ 22. Amend § 2.49 as follows:

■ a. Remove and reserve paragraph (a)(3); and

■ b. Revise paragraph (a)(13), to read as follows:

§ 2.49 Administrator, Rural Housing Service.

(a) * * *

(3) [Reserved]

* * * * *

(13) In coordination with the Director, Office of Advocacy and Outreach, issue receipts under section 2501A(e) of the Food, Agriculture, Conservation, and Trade Act of 1990 (7 U.S.C. 2279–1(e)).

* * * * *

Subpart H—Delegations of Authority by the Under Secretary for Food Safety

■ 23. Revise § 2.51 to read as follows:

§ 2.51 Deputy Under Secretary for Food Safety

Pursuant to § 2.18, and subject to policy guidance and direction by the Under Secretary, the following delegation of authority is made by the Under Secretary for Food Safety to the Deputy Under Secretary for Food Safety, to be exercised only during the absence or unavailability of the Under Secretary: Perform all the duties and exercise all the powers which are now or which may hereafter be delegated to the Under Secretary for Food Safety.

Subpart J—Delegations of Authority by the Under Secretary for Natural Resources and Environment

■ 24. Amend § 2.61 by revising paragraph (a)(27), to read as follows:

§ 2.61 Chief, Natural Resources Conservation Service.

(a) * * *

(27) In coordination with the Director, Office of Advocacy and Outreach, issue receipts under section 2501A(e) of the Food, Agriculture, Conservation, and Trade Act of 1990 (7 U.S.C. 2279–1(e)).

* * * * *

Subpart K—Delegations of Authority by the Under Secretary for Research, Education, and Economics

■ 25. Amend § 2.65 by removing and reserving paragraph (a)(56), to read as follows:

§ 2.65 Administrator, Agricultural Research Service.

(a) * * *

(56) [Reserved]

* * * * *

■ 26. Amend § 2.66 by revising the section heading and removing and reserving paragraph (a)(9), to read as follows:

§ 2.66 Director, National Institute of Food and Agriculture.

(a) * * *

(9) [Reserved]

* * * * *

Subpart M [Reserved]

■ 27. Remove and reserve subpart M as set forth above.

■ 28. Revise subpart P to read as follows:

Subpart P—Delegations of Authority by the Assistant Secretary for Administration

Sec.

2.87 Deputy Assistant Secretaries for Administration.
2.88 Assistant Secretary for Civil Rights.
2.89 Chief Information Officer.
2.90 Chief Financial Officer.
2.91 Director, Office of Human Resources Management.
2.92 Director, Office of Small and Disadvantaged Business Utilization.
2.93 Director, Office of Procurement and Property Management.
2.94 Director, Office of Advocacy and Outreach.
2.95 Director, Office of Homeland Security and Emergency Coordination.
2.96 Director, Office of Operations.
2.97 Director, Office of the Executive Secretariat.
2.98 Director, Management Services.

Subpart P—Delegations of Authority by the Assistant Secretary for Administration

§ 2.87 Deputy Assistant Secretary for Administration.

Pursuant to § 2.24(a), and subject to reservations in § 2.24(b), the following delegation of authority is made by the Assistant Secretary for Administration to the Deputy Assistant Secretary for Administration, to be exercised only during the absence or unavailability of the Assistant Secretary: Perform all the duties and exercise all the powers which are now or which may hereafter be delegated to the Assistant Secretary for Administration: Provided, that this authority shall be exercised first by a respective non-career Deputy Assistant Secretary in the order in which he or she has taken office as Deputy Assistant Secretary, and second by a career Deputy Assistant Secretary.

§ 2.88 Assistant Secretary for Civil Rights.

(a) *Delegations.* Pursuant to § 2.24(a)(1), and with due deference for delegations to other Departmental Management officials, the following delegations of authority are made by the Assistant Secretary for Administration to the Assistant Secretary for Civil Rights:

(1) Provide overall leadership, coordination, and direction for the Department's programs of civil rights, including program delivery, compliance, and equal employment opportunity, with emphasis on the following:

(i) Actions to enforce Title VI of the Civil Rights Act of 1964, 42 U.S.C. 2000d, prohibiting discrimination in federally assisted programs.

(ii) Actions to enforce Title VII of the Civil Rights Act of 1964, as amended, 42 U.S.C. 2000e, prohibiting discrimination in Federal employment.

(iii) Actions to enforce Title IX of the Education Amendments of 1972, 20 U.S.C. 1681, *et seq.,* prohibiting discrimination on the basis of sex in USDA education programs and activities funded by the Department.

(iv) Actions to enforce the Age Discrimination Act of 1975, 42 U.S.C. 6102, prohibiting discrimination on the basis of age in USDA programs and activities funded by the Department.

(v) Actions to enforce section 504 of the Rehabilitation Act of 1973, as amended, 29 U.S.C. 794, prohibiting discrimination against individuals with disabilities in USDA programs and activities funded or conducted by the Department.

(vi) Actions to enforce related Executive Orders, Congressional mandates, and other laws, rules, and regulations, as appropriate.

(2) Evaluate Departmental agency programs, activities, and impact statements for civil rights concerns.

(3) Analyze and evaluate program participation data and equal employment opportunity data.

(4) Provide leadership and coordinate Departmentwide programs of public notification regarding the availability of USDA programs on a nondiscriminatory basis.

(5) Coordinate with the Department of Justice on matters relating to title VI of the Civil Rights Act of 1964 (42 U.S.C. 2000d), title IX of the Education Amendments of 1972 (20 U.S.C. 1681, *et seq.*), and section 504 of the Rehabilitation Act of 1973, as amended (29 U.S.C. 794), except those matters in litigation, including administrative enforcement actions, which shall be coordinated by the Office of the General Counsel.

(6) Coordinate with the Department of Health and Human Services on matters relating to the Age Discrimination Act of 1975, 42 U.S.C. 6102, except those matters in litigation, including administrative enforcement actions, which shall be coordinated by the Office of the General Counsel.

(7) Order proceedings and hearings in the Department pursuant to §§ 15.9(e) and 15.86 of this title which concern consolidated or joint hearings within the Department or with other Federal departments and agencies.

(8) Order proceedings and hearings in the Department pursuant to § 15.8 of this title after the program agency has advised the applicant or recipient of his or her failure to comply and has determined that compliance cannot be secured by voluntary means.

(9) Issue orders to give a notice of hearing or the opportunity to request a hearing pursuant to part 15 of this title; arrange for the designation of an Administrative Law Judge to preside

over any such hearing; and determine whether the Administrative Law Judge so designated will make an initial decision or certify the record to the Secretary of Agriculture with his or her recommended findings and proposed action.

(10) Authorize the taking of action pursuant to § 15.8(a) of this title relating to compliance by "other means authorized by law."

(11) Make determinations required by § 15.8(d) of this title that compliance cannot be secured by voluntary means, and then take action, as appropriate.

(12) Make determinations that program complaint investigations performed under § 15.6 of this title establish a proper basis for findings of discrimination, and that actions taken to correct such findings are adequate.

(13) Investigate (or make determinations that program complaint investigations establish a proper basis for final determinations), make final determinations on both the merits and required corrective action, and, where applicable, make recommendations to the Secretary that relief be granted under 7 U.S.C. 6998(d) notwithstanding the finality of National Appeals Division decisions, as to complaints filed under parts 15a, 15b, and 15d of this title.

(14) Conduct civil rights investigations and compliance reviews Departmentwide.

(15) Develop regulations, plans, and procedures necessary to carry out the Department's civil rights programs, including the development, implementation, and coordination of Action Plans.

(16) *Related to Equal Employment Opportunity (EEO).* Is designated as the Department's Director of Equal Employment Opportunity with authority:

(i) To perform the functions and responsibilities of that position under 29 CFR part 1614, including the authority:

(A) To make changes in programs and procedures designed to eliminate discriminatory practices and improve the Department's EEO program.

(B) To provide EEO services for managers and employees.

(C) To make final agency decisions on EEO complaints by Department employees or applicants for employment and order such corrective measures in such complaints as may be considered necessary, including, in consultation with the Director, Office of Human Resources Management, the recommendation for such disciplinary action as is warranted when an employee has been found to have engaged in a discriminatory practice.

(ii) Administer the Department's EEO program.

(iii) Oversee and manage the EEO counseling function for the Department.

(iv) Process formal EEO complaints by employees or applicants for employment.

(v) Investigate Department EEO complaints and make final decisions on EEO complaints, except in those cases where the Assistant Secretary for Administration (or a person in the immediate office of the Assistant Secretary for Administration) or the Assistant Secretary for Civil Rights (or a person directly supervised by the Assistant Secretary for Civil Rights) has participated in the events that gave rise to the matter.

(vi) Order such corrective measures in EEO complaints as may be considered necessary, including the recommendation for such disciplinary action as is warranted when an employee has been found to have engaged in a discriminatory practice.

(vii) Provide liaison on EEO matters concerning complaints and appeals with the Department agencies and Department employees.

(viii) Conduct EEO evaluations and develop policy regarding EEO programs.

(ix) Provide liaison on EEO programs and activities with the Equal Employment Opportunity Commission and the Office of Personnel Management.

(17) Administer the discrimination appeals and complaints program for the Department, including all formal individual or group appeals, where the system provides for an avenue of redress to the Department level, Equal Employment Opportunity Commission, or other outside authority.

(18) Make final determinations, or enter into settlement agreements, on discrimination complaints in federally conducted programs subject to the Equal Credit Opportunity Act. This delegation includes the authority to make compensatory damage awards whether pursuant to a final determination or in a settlement agreement under the authority of the Equal Credit Opportunity Act and the authority to obligate agency funds, including Commodity Credit Corporation and Federal Crop Insurance Corporation funds to satisfy such an award.

(19) Make final determinations in proceedings under part 15f of this title where review of an administrative law judge decision is undertaken.

(20) Provide civil rights and equal employment opportunity support services, with authority to take actions required by law or regulation to perform such services for:

(i) The Secretary of Agriculture.

(ii) The general officers of the Department.

(iii) The offices and agencies reporting to the Assistant Secretary for Administration.

(iv) Any other offices or agencies of the Department as may be agreed.

(21) Redelegate, as appropriate, any authority delegated under this section to general officers of the Department and heads of Departmental agencies.

(b) [Reserved]

§ 2.89 Chief Information Officer.

(a) *Delegations.* The Chief Information Officer, under the supervision of the Assistant Secretary for Administration pursuant to § 2.24(a)(2), and with due deference for delegations to other Departmental Management officials, is responsible for executing the duties enumerated in Public Law 104–106 for agency Chief Information Officers, and additional specified duties, as follows:

(1) Report directly to the Secretary of Agriculture regarding information technology matters.

(2) Oversee all information technology and information resource management activities relating to the programs and operations of the Department and component agencies. This oversight includes approving information technology investments, monitoring and evaluating the performance of those investments and information resource management activities, approval of all architectures and components thereto and determining whether to continue, modify, or terminate an information technology program or project.

(3) Provide advice and other assistance to the Secretary and other senior management personnel to ensure that information technology acquired and managed for the Department consistent with chapter 35 of title 44, United States Code (Coordination of Federal Information Policy).

(4) Develop, implement, and maintain a sound and integrated Departmentwide information technology architecture.

(5) Promote the effective and efficient design and operation of all major information resources management processes for the Department, including improvements to work processes of the Department.

(6) Approve the acquisition or procurement of information technology resources by, or on behalf of, any Department agency or office.

(7) Collaborate with Department procurement personnel with respect to information technology acquisition strategy and policy.

(8) Function as the Major Information Technology Systems Executive in USDA

to integrate and unify the management process for the Department's major information technology system acquisitions and to monitor implementation of the policies and practices set forth in Office of Management and Budget (OMB) Circular No. A–109, Major Systems Acquisitions, for information technology. This includes the authority to:

(i) Ensure that OMB Circular No. A–109 is effectively implemented for information technology systems in the Department and that the management objectives of the Circular are realized.

(ii) Review the program management of each major information technology system acquisition.

(iii) Approve the appointment of the program manager for each major information technology systems acquisition.

(iv) Designate any Departmental information technology acquisition as a major system acquisition under OMB Circular No. A–109.

(9) On an annual basis:

(i) Assess Departmentwide personnel requirements regarding knowledge and skill in information resources management, and the adequacy of such requirements, to achieve the performance goals established for information resources management.

(ii) Develop strategies and specific plans for hiring, training, and professional development at the executive and management level to meet personnel information technology personnel requirements.

(iii) Report to the Assistant Secretary for Administration on progress made in improving information resources management capability.

(10) Function as the senior official to carry out the responsibilities of the Department under chapter 35 of title 44, United States Code (Coordination of Federal Information Policy), including:

(i) Ensure that the information policies, principles, standards, guidelines, rules and regulations prescribed by OMB are appropriately implemented within the Department.

(ii) Review proposed Department reporting and record keeping requirements, including those contained in rules and regulations, to ensure that they impose the minimum burden upon the public and have practical utility for the Department.

(iii) Develop and implement procedures for assessing the burden to the public and costs to the Department of information requirements contained in proposed legislation affecting Department programs.

(iv) Assist OMB in the performance of its functions assigned under the E-Government Act of 2002 (Pub. L. 107–347), including review of Department and Agency activities for compliance.

(v) Assist OMB in the performance of its functions assigned under the Paperwork Reduction Act of 1995 (44 U.S.C. 3501–3520), including review of Department and Agency activities for compliance.

(11) The Chief Information Officer is also responsible for the following:

(i) Provide Departmentwide guidance and direction in planning, developing, documenting, and managing applications software projects in accordance with Federal and Department information processing standards, procedures, and guidelines.

(ii) Provide Departmentwide guidance and direction in all aspects of information technology, including: Feasibility studies; economic analyses; systems design; acquisition of equipment, software, services, and timesharing arrangements; systems installation; systems performance and capacity evaluation; information technology investment governance; cybersecurity; and privacy. Monitor these activities for agencies' major systems development efforts to assure effective and economic use of resources and compatibility among systems of various agencies when required.

(iii) Manage the Enterprise Data Centers, with the exception of the National Finance Center; and oversee the delivery of Enterprise Data Center goods and services, with authority to take actions required by law or regulation to perform such services for:

(A) The Secretary of Agriculture.

(B) The general officers of the Department.

(C) The offices and agencies reporting to the Assistant Secretary for Administration.

(D) Any other offices or agencies of the Department as may be agreed.

(iv) Manage a comprehensive set of end user office automation services and oversee the delivery of goods and services associated with end user office automation services, with authority to take actions required by law or regulation to perform such services for any offices or agencies of the Department as may be agreed (except for the Office of the Secretary, the general officers of the Department, and the agencies and offices reporting to the Assistant Secretary for Administration, as specified in § 2.98(a)(1)).

(v) Manage the Agricultural Security Operations Center to enable the Department to effectively monitor, detect, analyze, protect, report, and respond against known cyber vulnerabilities, attacks, and exploitations.

(vi) Manage the Department's Certification and Accreditation process to ensure the Department and agencies have successfully conducted periodic risk assessments of its systems; grant the authority to operate for systems that have successfully completed the Certification and Accreditation process; and rescind or suspend the authority to operate for systems subject to repeated and/or significant security issues.

(vii) Ensure that OMB Circular No. A–16, Coordination of Geographic Information and Related Spatial Data Activities, is effectively implemented in the Department and that the management objectives of the Circular are realized; and providing Departmentwide guidance and direction in governing, developing, implementing, and maintaining a sound and integrated geospatial architecture.

(viii) Review and evaluate information technology activities related to delegated functions to assure that they conform to all applicable Federal and Department information technology management policies, plans, standards, procedures, and guidelines.

(ix) Design, develop, implement, and revise systems, processes, work methods, and techniques to improve the management and operational effectiveness of information resources.

(x) Administer the Departmental records, forms, reports and Directives Management Programs.

(xi) Manage all aspects of the USDA Telecommunications Program including planning, development, acquisition, and use of equipment and systems for voice, data, and communications, excluding the actual procurement of data transmission equipment, software, maintenance, and related supplies.

(xii) Manage Departmental telecommunications contracts.

(xiii) Provide technical advice throughout the Department.

(xiv) Implement a program for applying information resources management technology to improve productivity in the Department.

(xv) Plan, develop, install, and operate computer-based systems for message exchange, scheduling, computer conferencing, televideo technologies, and other applications of office automation technology which can be commonly used by multiple Department agencies and offices.

(xvi) Represent the Department in contacts with the Government Accountability Office, the General Services Administration, OMB, the National Institute of Standards and

Technology, and other organizations or agencies on matters related to delegated responsibilities.

(12) Implement policies established pursuant to paragraphs (a)(1) through (a)(11) of this section by:

(i) Disposing of information technology that is acquired by a Department agency in violation of procedures or standards for the Department Information Systems Technology Architecture.

(ii) Establishing information technology and information resources management performance standards for agency Chief Information Officers, information resources managers, and project managers to be used in the performance appraisal process.

(iii) Approving the selection of agency Chief Information Officers and agency major information technology system project managers in accordance with OMB policies.

(iv) Providing recommendations to Agency Heads for the removal or replacement of information technology project managers, when, in the opinion of the Chief Information Officer, applicable laws and policies are being violated, or, when the cost, schedule, or performance of an information technology project would indicate management deficiencies.

(v) Withdrawing agencies' authority to obligate funds on Information Technology programs or projects if the agency violates the Chief Information Officer policies, standards, or Department Information Systems Technology Architecture.

(vi) Requiring agencies to validate and verify major information technology systems through the use of an existing contract for such purpose designated by the Chief Information Officer.

(vii) Requiring approval by the Chief Information Officer of any proposed acquisition of information technology (whether through the award or modification of a procurement contract, a cooperative or other agreement with a non-Federal party, or an interagency agreement) to ensure technical conformance to the Department technical architecture.

(viii) Providing guidance to USDA regarding implementation of Section 508 of the Rehabilitation Act, as well as on-going consultative assistance regarding information technology accessibility, and reviewing progress made toward achieving information technology accessibility for USDA employees and individuals with disabilities.

(13) *Related to the Privacy Act.* Appoint a Department Privacy Act Officer; oversee general officers and agency heads in the development and implementation of policies issued pursuant to the provisions of the Privacy Act, 5 U.S.C. 552a; and provide consultation and guidance regarding those policies.

(14) *Related to the Freedom of Information Act.* Serve as the Chief Freedom of Information Act Officer for the Department; oversee general officers and agency heads in efficient and appropriate compliance with the provisions of the Freedom of Information Act (5 U.S.C. 552); monitor implementation of 5 U.S.C. 552 throughout the agency and keep the Secretary, the General Counsel, and the Attorney General informed regarding agency performance in its implementation; recommend to the Secretary necessary adjustments to agency practices, policies, personnel, and funding to improve implementation of 5 U.S.C. 552; review and report to the Attorney General, through the Secretary, as the Attorney General may direct; and, facilitate public understanding of the purposes of the statutory exemptions contained in 5 U.S.C. 552.

(b) [Reserved]

§ 2.90 Chief Financial Officer.

(a) The Chief Financial Officer, under the supervision of the Assistant Secretary for Administration pursuant to §§ 2.24(a)(3) and 2.24(a)(13), with due deference for delegations to other Departmental Management officials, and subject to the reservations in § 2.24(b), is responsible for executing the duties enumerated for agency Chief Financial Officers in the Chief Financial Officers Act of 1990, Public Law 101–576, 31 U.S.C. 902, and additional specified duties, including:

(1) Report directly to the Secretary of Agriculture regarding financial management matters.

(2) Oversee all financial management activities relating to the programs and operations of the Department and component agencies.

(3) Develop and maintain an integrated accounting and financial system for the Department and component agencies, including financial reporting and internal controls, which—

(i) Complies with applicable accounting principles, standards, and requirements, and internal control standards;

(ii) Complies with such policies and requirements as may be prescribed by the Director of the Office of Management and Budget (OMB);

(iii) Complies with any other requirements applicable to such systems; and

(iv) Provides for complete, reliable, consistent, and timely information which is prepared on a uniform basis and which is responsive to the financial information needs of Department management and for the development and reporting of cost information, the integration of accounting and budgeting information, and the systematic measurement of performance.

(4) Make recommendations to the Assistant Secretary for Administration regarding the selection of the Deputy Chief Financial Officer of the Department, and selection of principal financial officers of component agencies of the Department.

(5) Direct, manage, and provide policy guidance and oversight of Department financial management personnel, activities, and operations, including:

(i) Prepare and annually revise a Departmental plan to:

(A) Implement the 5-year financial management plan prepared by the Director of OMB under 31 U.S.C. 3512(a)(3); and

(B) Comply with the requirements established for agency financial statements under 31 U.S.C. 3515 and with the requirements for audits of Department financial statements established in 31 U.S.C. 3521(e) and (f).

(ii) Develop Departmental financial management budgets, including the oversight and recommendation of approval of component agency financial management budgets.

(iii) Recruit, select, and train personnel to carry out Departmental financial management functions.

(iv) Approve and manage Departmental, and approve component agency, financial management systems design or enhancement projects.

(v) Implement and approve Departmental, and approve component agency, asset management systems, including systems for cash management, credit management, debt collection, and property and inventory management and control.

(6) Prepare and transmit, by not later than 60 days after the submission of the audit report required by 31 U.S.C. 3521(f), an annual report to the Secretary, the Assistant Secretary for Administration, and the Director of OMB, which shall include:

(i) A description and analysis of the status of financial management of the Department.

(ii) The annual financial statements prepared under 31 U.S.C. 3521.

(iii) The audit report transmitted to the Secretary under 31 U.S.C. 3521.

(iv) A summary of the reports on internal accounting and administrative control systems submitted to the

President and the Congress under the amendments made by the Federal Managers' Financial Integrity Act of 1982 (31 U.S.C. 1113, 3512).

(v) Other information the Secretary considers appropriate to inform fully the President and the Congress concerning the financial management of the Department.

(7) Monitor the financial execution of the budget of the Department in relation to projected and actual expenditures, and prepare and submit to the Secretary timely performance reports.

(8) Review, on a biennial basis, the fees, royalties, rent, and other charges imposed by the Department for services and things of value it produces, and make recommendations on revising those charges to reflect costs incurred by the Department in providing those services and things of value.

(9) Access all records, reports, audits, reviews, documents, papers, recommendations, or other material that are the property of the Department or that are available to the Department, and that relate to programs and operations with respect to which the Chief Financial Officer has responsibilities, except that this grant allows no access greater than that permitted under any other law to records, reports, audits, reviews, documents, papers, recommendations, or other material of the Office of Inspector General.

(10) Request such information or assistance as may be necessary for carrying out the duties and responsibilities granted by the Chief Financial Officers Act of 1990 (Pub. L. 101–576), from any Federal, State, or local governmental entity.

(11) To the extent and in such amounts as may be provided in advance by appropriations acts, enter into contracts and other arrangements with public agencies and with private persons for the preparation of financial statements, studies, analyses, and other services, and making such payments as may be necessary to carry out the duties and prerogatives of the Chief Financial Officer.

(12) Designate the Department's Comptroller of the Department Working Capital Fund.

(13) Establish Departmental policies, standards, techniques, and procedures applicable to all USDA agencies for the following areas:

(i) Development, maintenance, review and approval of all departmental, and review and approval of component agency, internal control, fiscal, financial management and accounting systems including the financial aspects of payment management and property systems.

(ii) Selection, standardization, and simplification of program delivery processes utilizing grants, cooperative agreements and other forms of Federal assistance.

(iii) Review and approval of Federal assistance, internal control, fiscal, accounting and financial management regulations and instructions proposed or issued by USDA agencies for conformity with Departmental requirements.

(iv) Section 5301 of the Anti-Drug Abuse Act of 1988 (21 U.S.C. 862) as it relates to grants, loans, and licenses.

(14) Establish policies related to the Department Working Capital Fund.

(15) Approve regulations, procedures and rates for goods and services financed through the Department Working Capital Fund which will impact the financial administration of the Fund.

(16) Exercise responsibility and authority for operating USDA's financial and subsidiary management systems and related administrative systems including: Departmentwide payroll and personnel information systems, statistics, administrative payments, billings and collections, and related reporting systems that are either requested by the agencies or required by the Department.

(17) Manage the National Finance Center (NFC).

(18) Provide management support services for the NFC, and by agreement with agency heads concerned, provide such services for other USDA tenants housed in the same facility. As used herein, such management support services shall include:

(i) Personnel services, as listed in § 2.91(a)(10), and organizational support services, with authority to take actions required by law or regulation to perform such services; and

(ii) Procurement, property management, space management, communications, messenger, paperwork management, and related administrative services, with authority to take actions required by law or regulation to perform such services.

(19) Exercise responsibility and authority for all matters related to the Department's accounting and financial operations including such activities as:

(i) Financial administration, including accounting and related activities.

(ii) Reviewing financial aspects of agency operations and proposals.

(iii) Furnishing consulting services to agencies to assist them in developing and maintaining accounting and financial management systems and internal controls, and for other purposes consistent with delegations in paragraph (a)(13) of this section.

(iv) Reviewing and monitoring agency implementation of Federal assistance policies.

(v) Reviewing and approving agencies' accounting systems documentation including related development plans, activities, and controls.

(vi) Monitoring agencies' progress in developing and revising accounting and financial management systems and internal controls.

(vii) Evaluating agencies' financial systems to determine the effectiveness of procedures employed, compliance with regulations, and the appropriateness of policies and practices.

(viii) Promulgation of Department schedule of fees and charges for reproductions, furnishing of copies and making searches for official records pursuant to the Freedom of Information Act, 5 U.S.C. 552.

(ix) Monitoring USDA implementation of section 5301 of the Anti-Drug Abuse Act of 1988 (21 U.S.C. 862) as it relates to grants, loans, and licenses.

(20) Establish Department and approve component agency programs, policies, standards, systems, techniques and procedures to improve the management and operational efficiency and effectiveness of the USDA including:

(i) Increased use of operations research and management science in the areas of productivity and management.

(ii) All activities financed through the Department Working Capital Fund.

(21) Develop Departmental policies, standards, techniques, and procedures for the conduct of reviews and analysis of the utilization of the resources of State and local governments, other Federal agencies and of the private sector in domestic program operations.

(22) Represent the Department in contacts with OMB, General Services Administration, GAO, Department of the Treasury, Office of Personnel Management, Department of Health and Human Services, Department of Labor, Environmental Protection Agency, Department of Commerce, Congress of the United States, State and local governments, universities, and other public and private sector individuals, organizations or agencies on matters related to assigned responsibilities.

(23) Establish policies related to travel by USDA employees.

(24) Exercise responsibility for coordinating and overseeing the implementation of the Government Performance and Results Act of 1993, Public Law 103–62, at the Department.

(25) Provide budget, accounting, fiscal and related financial management services, with authority to take action required by law or regulation to provide such services for Working Capital Funds and general appropriated and trust funds for:

(i) The Secretary of Agriculture.

(ii) The general officers of the Department, except the Inspector General.

(iii) The offices and agencies reporting to the Assistant Secretary for Administration,

(iv) Any other offices and agencies of the Department as may be agreed.

(26) Develop, promulgate, and coordinate Department-wide policy concerning nonprocurement debarment and suspension.

(27) Prepare and submit to Congress reports on conferences sponsored or held by the Department or attended by employees of the Department (7 U.S.C. 2255b).

(28) *Related to budget formulation and program analysis.*

(i) Designate the Department's Budget Officer and exercise general responsibility and authority for all matters related to the Department's budgeting affairs including:

(A) Resource administration, including all phases of the acquisition, and distribution of funds and staff years.

(B) Legislative and regulatory reporting and related activities.

(ii) Provide staff assistance for the Secretary, general officers, and other Department and agency officials.

(iii) Formulate and promulgate Departmental budgetary, legislative and regulatory policies and procedures.

(iv) Represent the Department in contacts with OMB, the GAO, the Department of the Treasury, Congressional Committees on Appropriations, and other organizations and agencies on matters related to his or her responsibility.

(v) Coordinate and/or conduct policy and program analyses on agency operations and proposals to assist the Secretary, general officers and other Department and agency officials in formulating and implementing USDA policies and programs.

(vi) Review and analyze legislation, regulations, and policy options to determine their impact on USDA programs and policy objectives and on the Department's budget.

(vii) Monitor ongoing studies with significant program or policy implications.

(29) Administer the debarment authorities in section 14211 of the Food, Conservation, and Energy Act of 2008 (7 U.S.C. 2209j) in coordination with the Director, Office of Procurement and Property Management.

§ 2.91 Director, Office of Human Resources Management.

(a) *Delegations.* Pursuant to § 2.24(a)(4), with due deference for delegations to other Departmental Management officials, and subject to the reservations in § 2.24(b), the following delegations of authority are made by the Assistant Secretary for Administration to the Director, Office of Human Resources Management:

(1) Formulate and issue Department policy, standards, rules and regulations relating to human resources management.

(2) Provide human resources management procedural guidance and operational instructions.

(3) Set standards for human resources data systems.

(4) Inspect and evaluate human resources management operations and issue instructions or take direct action to insure conformity with appropriate laws, Executive Orders, Office of Personnel Management (OPM) rules and regulations, and other appropriate rules and regulations.

(5) Exercise final authority in all human resources matters, including individual cases, that involve the jurisdiction of more than one General Officer, or agency head, or otherwise as deemed appropriate.

(6) Receive, review, and recommend action on all requests for the Secretary's or Assistant Secretary for Administration's approval in human resources matters.

(7) Authorize and make final decisions on adverse actions except in those cases where the Assistant Secretary for Administration or the Director, Office of Human Resources Management, has participated.

(8) Represent the Department in human resources matters in all contacts outside the Department.

(9) Exercise specific authorities in the following operational matters:

(i) Waive repayment of training expenses where an employee fails to fulfill service agreement.

(ii) Establish or change standards and plans for awards to private citizens.

(iii) Execute, change, extend, or renew:

(A) Labor-Management Agreements.

(B) Certifications of supervisory/managerial and non-labor union employee and professional organizations and associations.

(iv) Represent the Department in all contacts with the national offices of labor organizations in fulfilling the Department's national consultation obligations under 5 U.S.C. 7113.

(v) Change a position (with no material change in duties) from one pay system to another.

(vi) Grant restoration rights, and release employees with administrative reemployment rights.

(vii) Authorize any mass dismissals of employees in the Washington, DC metropolitan area.

(viii) Approve "normal line of promotion" cases in the excepted service where not in accordance with time-in grade criteria.

(ix) Make the final decision on all classification appeals filed with the Department of Agriculture.

(x) Authorize all employment actions (except nondisciplinary separations and LWOP) and classification actions for senior level and equivalent positions including Senior Executive Service positions and special authority professional and scientific positions responsible for carrying out research and development functions.

(xi) Authorize all employment actions (except LWOP) for the following positions:

(A) Schedule C.

(B) Non-career Senior Executive Service or equivalent.

(C) Administrative Law Judge.

(xii) Authorize and make final decisions on adverse actions for positions in GS–1–15 or equivalent.

(xiii) Authorize and make final decisions on adverse actions for positions in the career Senior Executive Service or equivalent.

(xiv) Approve the details of Department employees to the White House.

(xv) Authorize adverse actions based in whole or in part on an allegation of violation of 5 U.S.C. chapter 73, subchapter III, for employees in the excepted service.

(xvi) Authorize long-term training in programs which require Departmentwide competition.

(xvii) Initiate and take adverse action in cases involving a violation of the merit system.

(xviii) Any other human resources operational matter.

(10) As used in this section, the term human resources includes:

(i) Position management.

(ii) Position classification.

(iii) Employment.

(iv) Pay administration.

(v) Automated human resources data and systems.

(vi) Hours of duty.

(vii) Performance management.

(viii) Promotions.

(ix) Employee development.

(x) Incentive programs.

(xi) Leave.

(xii) Retirement.
(xiii) Human resources program management accountability and evaluation.
(xiv) Social security.
(xv) Life insurance.
(xvi) Health benefits.
(xvii) Unemployment compensation.
(xviii) Labor management relations.
(xix) Intramanagement consultation.
(xx) [Reserved]
(xxi) Discipline.
(xxii) Appeals.
(xxiii) Drug Testing Program.
(xxiv) Worklife Program.
(xxv) Transit Subsidy Program.
(xxvi) Alternative Dispute Resolution.
(11) Maintain, review, and update Departmental delegations of authority.
(12) Recommend authorization of organizational changes.
(13) Formulate and promulgate Departmental policies regarding reorganizations.
(14) [Reserved]
(15) Provide for diversity and inclusion, as follows:
(i) Establish, direct, and provide policy and oversight for a Department-wide Special Emphasis Program (SEP) including: Women, African Americans, Hispanics, Asian/Pacific Islanders, Native Americans, Disabled, and Gay/Lesbian/Bisexual/Transgender.
(ii) Provide oversight and support for Departmental SEP recognition programs.
(iii) Direct and oversee the Department-wide SEPM Council.
(iv) Administer Federal Equal Opportunity Recruitment Program.
(16) Oversee and manage the Department's administrative grievance program.
(17) Make final decisions in those cases where an agency head has appealed the recommended decision of a grievance examiner.
(18) Administer the administrative appeals process related to the inclusion of positions in the testing designated position listing in the Department's Drug-Free Workplace Program and designate the final appeal officer for that Program.
(19) Formulate and issue Department policy, standards, rules, and regulations relating to the Senior Scientific Research Service (7 U.S.C. 7657).
(20) *Related to conflict management.*
(i) Designate the senior official to serve as the Department Dispute Resolution Specialist under the Administrative Dispute Resolution Act of 1996, 5 U.S.C. 571, *et seq.,* and provide leadership, direction and coordination for the Department's conflict prevention and resolution activities.
(ii) Issue Departmental regulations, policies, and procedures relating to the use of Alternative Dispute Resolution (ADR) to resolve employment complaints and grievances, workplace disputes, Departmental program disputes, and contract and procurement disputes.
(iii) Provide ADR services for:
(A) The Secretary of Agriculture.
(B) The general officers of the Department.
(C) The offices and agencies reporting to the Assistant Secretary for Administration.
(D) Any other office or agency of the Department as may be agreed.
(iv) Develop and issue standards for mediators and other ADR neutrals utilized by the Department.
(v) Coordinate ADR activities throughout the Department.
(vi) Monitor agency ADR programs and report at least annually to the Secretary on the Department's ADR activities.
(21) Redelegate, as appropriate, any authority delegated under paragraphs (a)(1) through (a)(20) of this section to general officers of the Department and heads of Departmental agencies, provided that the Director, Office of Human Resources Management retains the authority to make final decisions in any human resources matter so redelegated.
(22) *Related to Ethics.* Provide administrative supervision for the Office of Ethics.
(b) *Reservations.* The following authorities are reserved to the Assistant Secretary for Administration:
(1) Authorize organizational changes occurring in a Department agency or staff office which affect the overall structure of that service or office; *i.e.,* require a change to that service or office's overall organization chart.
(2) Approve coverage and waiver of individual law enforcement and firefighter positions under the special retirement provisions of the Civil Service Retirement System and the Federal Employees Retirement System.

§ 2.92 Director, Office of Small and Disadvantaged Business Utilization.

(a) *Delegations.* Pursuant to § 2.24(a)(5), and with due deference for delegations to other Departmental Management officials, the following delegations of authority are made by the Assistant Secretary for Administration to the Director, Office of Small and Disadvantaged Business Utilization:
(1) The Director, Office of Small and Disadvantaged Business Utilization, under the supervision of the Assistant Secretary for Administration, has specific responsibilities under the Small Business Act, 15 U.S.C. 644(k). These duties include being responsible for the following:
(i) Administer the Department's small and disadvantaged business activities related to procurement contracts, minority bank deposits, and grants and loan activities affecting small and minority businesses including women-owned business, and the small business, small minority business, and small women-owned business subcontracting programs.
(ii) Provide Departmentwide liaison and coordination of activities related to small, small disadvantaged, and women-owned businesses with the Small Business Administration and others in public and private sector.
(iii) Develop policies and procedures required by the applicable provision of the Small Business Act, as amended, to include the establishment of goals.
(iv) Implement and administer programs described under sections 8 and 15 of the Small Business Act, as amended (15 U.S.C. 637 and 644).
(v) In compliance with the Veterans Benefits Act of 2003 (Pub. L. 108–183) amending the Small Business Act, implement and administer procurement programs for small business concerns owned and controlled by service-disabled veterans.
(2) The Director, Office of Small and Disadvantaged Business Utilization, also has the following responsibilities:
(i) In compliance with the Javits-Wagner-O'Day Act (41 U.S.C. 46 *et seq.*), implement and administer the Department's AbilityOne program for purchases from qualified nonprofit agencies for the blind or for the severely disabled.
(ii) [Reserved]
(b) [Reserved]

§ 2.93 Director, Office of Procurement and Property Management.

(a) *Delegations.* Pursuant to §§ 2.24(a)(6) and 2.24(a)(13), and with due deference for delegations to other Departmental Management officials, the following delegations of authority are made by the Assistant Secretary for Administration to the Director, Office of Procurement and Property Management:
(1) Exercise full Departmentwide contracting and procurement authority.
(2) Promulgate policies, standards, techniques, and procedures, and represent the Department, in the following:
(i) Acquisition, including, but not limited to, the procurement of supplies, services, equipment, and construction.
(ii) Socioeconomic programs relating to contracting.
(iii) Selection, standardization, and simplification of program delivery processes utilizing contracts.

(iv) Acquisition, leasing, utilization, value analysis, construction, maintenance, and disposition of real and personal property, including control of space assignments.

(v) Motor vehicle and aircraft fleet and other vehicular transportation.

(vi) Transportation of things (traffic management).

(vii) Prevention, control, and abatement of pollution with respect to Federal facilities and activities under the control of the Department (Executive Order 12088, "Federal Compliance With Pollution Control Standards," 3 CFR, 1978 Comp., p. 243).

(viii) Implementation of the Uniform Relocation Assistance and Real Property Acquisition Policies Act of 1970 (42 U.S.C. 4601, *et seq.*).

(ix) Development and implementation of sustainable operations actions including establishing and achieving greenhouse gas emission reduction goals, reducing energy intensity, increasing renewable energy use, increasing water efficiency, reducing petroleum use and increasing alternative fuel use, increasing recycling and waste diversion, preventing pollution, reducing use of toxic chemicals, procuring sustainable products and services, achieving sustainable principles for new and existing buildings, promoting electronic stewardship, and continuing environmental management system use. Maintain liaison with the Office of the Federal Environmental Executive, the Council on Environmental Quality, the Office of Management and Budget (OMB), the Department of Energy, and other Government agencies in these matters.

(x) Implementation of a program for the Federal procurement of biobased products and of a voluntary "USDA Certified Biobased product" labeling program (7 U.S.C. 8102).

(xi) Entering into cooperative agreements to further research programs in the food and agricultural sciences, related to establishing and implementing Federal biobased procurement and voluntary biobased labeling programs (7 U.S.C. 3318).

(xii) Implementation of the policies and procedures set forth in OMB Circular No. A–76, Performance of Commercial Activities.

(3) Exercise the following special authorities:

(i) The Director, Office of Procurement and Property Management, is designated as the Departmental Debarring Officer and authorized to perform the functions of 48 CFR part 9, subpart 9.4 related to procurement activities, except for commodity acquisitions on behalf of the Commodity Credit Corporation (7 CFR part 1407), with authority to redelegate suspension and debarment authority for contracts awarded under the School Lunch and Surplus Removal Programs (42 U.S.C. 1755 and 7 U.S.C. 612c).

(ii) Conduct liaison with the Office of Federal Register (1 CFR part 16) including the making of required certifications pursuant to 1 CFR part 18.

(iii) Maintain custody and permit appropriate use of the official seal of the Department.

(iv) Establish policy for the use of the official flags of the Secretary and the Department.

(v) Coordinate collection and disposition of personal property of historical significance.

(vi) Make information returns to the Internal Revenue Service as prescribed by 26 U.S.C. 6050M and by 26 CFR 1.6050M–1 and such other Treasury regulations, guidelines or procedures as may be issued by the Internal Revenue Service in accordance with 26 U.S.C. 6050M. This includes making such verifications or certifications as may be required by 26 CFR 1.6050M–1 and making the election allowed by 26 CFR 1.6050M–1(d)(5)(1).

(vii) Promulgate regulations for the management of contracting and procurement for information technology and telecommunication equipment, software, services, maintenance and related supplies.

(viii) Represent the Department in working with the Government Accountability Office (GAO), the General Services Administration, OMB, and other organizations or agencies on matters related to assigned responsibilities.

(ix) Redelegate, as appropriate, the authority in paragraphs (a)(10) and (a)(12) of this section to agency Property Officials or other qualified agency officials with no power of further redelegation.

(4) Exercise authority under the Department's Acquisition Executive (the Assistant Secretary for Administration) to integrate and unify the management process for the Department's major system acquisitions and to monitor implementation of the policies and practices set forth in OMB Circular No. A–109, Major Systems Acquisitions, with the exception that major system acquisitions for information technology shall be under the cognizance of the Chief Information Officer. This delegation includes the authority to:

(i) Ensure that OMB Circular No. A–109 is effectively implemented in the Department and that the management objectives of the Circular are realized.

(ii) Review the program management of each major system acquisition, excluding information technology.

(iii) Designate the program manager for each major system acquisition, excluding information technology.

(iv) Designate any Departmental acquisition, excluding information technology, as a major system acquisition under OMB Circular No. A–109.

(5) Pursuant to Executive Order 12931, "Federal Procurement Reform," 3 CFR, 1994 Comp., p. 925, and sections 16, 22, and 37 of the Office of Federal Procurement Policy Act, as amended, 41 U.S.C. 414, 418b, and 433, serve as the Senior Procurement Executive for the Department with responsibility for the following:

(i) Prescribing and publishing Departmental acquisition policies, advisories, regulations, and procedures.

(ii) Taking any necessary actions consistent with policies, regulations, and procedures, with respect to purchases, contracts, leases, agreements, and other transactions.

(iii) Designating contracting officers.

(iv) Establishing clear lines and limitations of contracting authority through written delegations of authority.

(v) Approving any Departmental and component agency procurement systems and processes.

(vi) Managing and enhancing career development of the Department's acquisition workforce.

(vii) Participating in the development of Governmentwide procurement policies, regulations and standards, and determining specific areas where Governmentwide performance standards should be established and applied.

(viii) Developing unique Departmental standards as required.

(ix) Overseeing the development of procurement goals, guidelines, and innovation.

(x) Measuring and evaluating procurement office performance against stated goals.

(xi) Advising the Assistant Secretary for Administration whether procurement goals are being achieved.

(xii) Prescribing standards for agency Procurement Executives.

(xiii) Redelegating, suspending, or revoking, as appropriate, the authority in paragraph (a)(5)(i) of this section to agency Procurement Executives or other qualified agency officials with no power of further redelegation.

(xiv) Redelegating, suspending, or revoking, as appropriate, the authorities in paragraphs (a)(5)(ii), (iii), (iv), (vi), and (vii) of this section to agency Procurement Executives or other

qualified agency officials with the power of further redelegation.

(6) Represent the Department in establishing standards for acquisition transactions within the electronic data interchange environment.

(7) Designate the Departmental Task Order Ombudsman pursuant to 41 U.S.C. 253j.

(8) Serve as Departmental Remedy Coordination Official pursuant to 41 U.S.C. 255 to determine whether payment to any contractor should be reduced or suspended based on substantial evidence that the request of the contractor for advance, partial, or progress payment is based on fraud.

(9) Review and approve exemptions for USDA contracts, subcontracts, grants, agreements, and loans from the requirements of the Clean Air Act, as amended (42 U.S.C. 7401, *et seq.*), the Federal Water Pollution Control Act, as amended (33 U.S.C. 1251, *et seq.*), and Executive Order 11738, "Providing for Administration of the Clean Air Act and the Federal Water Pollution Control Act With Respect to Federal Contracts, Grants, or Loans," 3 CFR, 1971–1975 Comp., p. 799, when he or she determines that the paramount interest of the United States so requires as provided in these acts and Executive Order and the regulations of the EPA (2 CFR 1532.1140).

(10) Transfer excess research equipment to eligible educational institutions or certain non-profit organizations for the conduct of technical and scientific education and research activities under section 11(i) of the Stevenson-Wydler Technology Innovation Act of 1980 (15 U.S.C. 3710(i)) (7 CFR part 2812).

(11) Promulgate policy and obtain and furnish Federal excess personal property in accordance with section 923 of Public Law 104–127 (7 U.S.C. 2206a), to support research, educational, technical and scientific activities or for related programs, to:

(i) Any 1994 Institutions (as defined in section 532 of the Equity in Educational Land-Grant Status Act of 1994 (Pub. L. 103–382; 7 U.S.C. 301 note)).

(ii) Any Institutions eligible to receive funds under the Act of August 30, 1890 (7 U.S.C. 321, *et seq.*) including Tuskegee University.

(iii) Any Hispanic-serving Institutions (as defined in section 316(b) of the Higher Education Act of 1965 (20 U.S.C. 1059c(b)).

(12) Make available to organizations excess or surplus computers or other technical equipment of the Department for the purpose of distribution to cities, towns, or local government entities in rural areas (7 U.S.C. 2206b).

(13) Issue regulations and directives to implement or supplement the Federal Acquisition Regulations (48 CFR chapter 1 and 4).

(14) Issue regulations and directives to implement or supplement the Federal Property Management Regulations (41 CFR chapter 101) and the Federal Management Regulation (41 CFR chapter 102).

(15) [Reserved]

(16) Pursuant to the Office of Federal Procurement Policy Act (Act), as amended (41 U.S.C. 401, *et seq.*), designate the Department's Advocate for Competition with the responsibility for section 20 of the Act (41 U.S.C. 418), including:

(i) Reviewing the procurement activities of the Department.

(ii) Developing new initiatives to increase full and open competition.

(iii) Developing goals and plans and recommending actions to increase competition.

(iv) Challenging conditions unnecessarily restricting competition in the acquisition of supplies and services.

(v) Promoting the acquisition of commercial items.

(vi) Designating an Advocate for Competition for each procuring activity within the Department.

(17) *Related to compliance with environmental laws and sustainable operating requirements.*

(i) Serve as Departmental Management Member and Executive Secretary of the USDA Sustainable Operations Council.

(ii) Represent USDA in consulting or working with the EPA, the Council on Environmental Quality, the Domestic Policy Council, and others to develop policies relating to hazardous materials management and Federal facilities compliance with applicable pollution control laws.

(iii) Monitor, review, evaluate, and oversee hazardous materials management program activities and compliance Department-wide.

(iv) Monitor, review, evaluate, and oversee USDA agency expenditures for hazardous materials management program accomplishments.

(v) Represent USDA on the National Response Team and exercise responsibility for USDA response efforts for hazardous substance releases and oil spills pursuant to the Comprehensive Environmental Response, Compensation, and Liability Act of 1980, as amended (42 U.S.C. 9601, *et seq.*); the Clean Water Act, as amended (33 U.S.C. 1251, *et seq.*); Oil Pollution Act, as amended (33 U.S.C. 2701, *et seq.*); Executive Order 12580, "Superfund Implementation," 3 CFR, 1987 Comp., p. 193; Executive Order 12777, "Implementation of section 311 of the Federal Water Pollution Control Act of October 18, 1972, as amended, and the Oil Pollution Act of 1990," 3 CFR, 1991 Comp., p. 351, and the National Oil and Hazardous Substances Contingency Plan, 40 CFR Part 300. When a spill of national significance is declared under the Oil Pollution Act of 1990, responsibility for USDA response efforts will transfer to the Office of Homeland Security and Emergency Coordination, as determined by the Assistant Secretary for Administration.

(vi) Approve disbursements from the New World Mine Response and Restoration Account, approve the New World Mine Response and Restoration Plan, and make quarterly reports to Congress under Sections 502(d) and (f) of Title V of the Department of the Interior and Related Agencies Appropriations Act of 1998, Public Law 105–83.

(vii) Ensure that the Hazardous Materials Management Program Department-wide is accomplished with regard to, and in compliance with, Executive Order 12898, "Federal Actions to Address Environmental Justice in Minority Populations and Low-Income Populations," 3 CFR, 1994 Comp., p. 859.

(viii) Take such action as may be necessary, with the affected agency head and with the concurrence of the General Counsel, including issuance of administrative orders and agreements with any person to perform any response action under sections 106(a) and 122 (except subsection (b)(1)) of the Comprehensive Environmental Response, Compensation, and Liability Act of 1980, as amended (42 U.S.C. 9606(a), 9622), pursuant to sections 4(c)(3) and 4(d)(3) of Executive Order 12580, "Superfund Implementation," 3 CFR, 1987 Comp., p. 193, as amended by Executive Order 13016, "Amendment to Executive Order No. 12580," 3 CFR, 1996 Comp., p. 214.

(ix) Represent USDA on the EPA Brownfields Federal Partnership and coordinate USDA support for Brownfields redevelopment and establish policy and guidance for the implementation of the June 2003 amendment to Executive Order 12580, "Superfund Implementation," 3 CFR, 1987 Comp., p. 193 (Executive Order 13308, "Further Amendment to Executive Order 12580, As Amended, Superfund Implementation," 3 CFR, 2003 Comp., p. 239).

(18) *Related to occupational safety and health.*

(i) Establish Departmentwide safety and health policy and provide leadership in the development, coordination, and implementation of related standards, techniques, and procedures, and represent the Department in complying with laws, Executive Orders and other policy and procedural issuances and related to occupational safety and health and workers' compensation programs within the Department.

(ii) Represent the Department in all rulemaking, advisory, or legislative capacities on any groups, committees, or Governmentwide activities that affect the USDA Occupational Safety and Health Management Program.

(iii) Determine and provide Departmentwide technical services and regional staff support for the safety and health programs.

(iv) Administer the computerized management information systems for the collection, processing, and dissemination of data related to the Department's occupational safety and health programs.

(v) Administer the Department's Occupational Health and Preventive Medicine Program, as well as design and operate employee assistance and workers' compensation activities.

(vi) Provide education and training on a Departmentwide basis for safety and health-related issues and develop resource and operational manuals.

(19) In coordination with the Chief Financial Officer, implement the debarment authorities in section 14211 of the Food, Conservation, and Energy Act of 2008 (7 U.S.C. 2209j), in connection with procurement activities.

(b) [Reserved]

§ 2.94 Director, Office of Advocacy and Outreach.

(a) *Delegations.* Pursuant to § 2.24(a)(7), and with due deference for delegations to other Departmental Management officials, the following delegations of authority are made by the Assistant Secretary for Administration to the Director, Office of Advocacy and Outreach:

(1) Ensure that small farms and ranches, beginning farmers or ranchers, and socially disadvantaged farmers or ranchers have access to, and equitable participation in, programs and services of the Department pursuant to section 226B(c) of the Department of Agriculture Reorganization Act of 1994 (7 U.S.C. 6934(c)).

(2) Oversee the Advisory Committee for Beginning Farmers and Ranchers.

(3) Oversee the operations of the Office of Small Farms Coordination.

(4) Administer section 2501 of the Food, Agriculture, Conservation, and Trade Act of 1990 (7 U.S.C. 2279), except for authorities related to the Census of Agriculture and economic studies in subsection (h) of that section.

(5) Establish and oversee the Minority Farmer Advisory Committee pursuant to section 14008 of FCEA (7 U.S.C. 2279 note).

(6) Administer the low-income migrant and seasonal farmworker grants program under section 2281 of the Food, Agriculture, Conservation, and Trade Act of 1990 (42 U.S.C. 5177a).

(7) Consult with appropriate entities regarding integration of farmworker interests into Department programs, including assisting farmworkers in becoming agricultural producers or landowners, and research, program improvements, and agricultural education opportunities for low-income and migrant seasonal farmworkers.

(8) Administer the grants program under section 14204 of FCEA (7 U.S.C. 2008q–1) to improve the supply, stability, safety, and training of the agricultural labor force.

(9) Administer and coordinate a USDA outreach program in collaboration with USDA agencies.

(10) Administer section 2501A of the Food, Agriculture, Conservation, and Trade Act of 1990 (7 U.S.C. 2279–1), including the authority to coordinate Department policy for the issuance of receipts under subsection (e) of that section.

(11) Provide strategic planning and performance measurement, coordinate outreach activities, monitor goals and objectives, and evaluate programs, of Department programs and activities involving small farms or ranches and beginning or socially disadvantaged farmers or ranchers.

(12) Administer the USDA/1994 Land Grant Institutions (Tribal Colleges) Programs.

(13) Administer the USDA/1890 Liaison Officer Program.

(14) Administer the Hispanic Serving Institutions National Program.

(b) [Reserved]

§ 2.95 Director, Office of Homeland Security and Emergency Coordination.

(a) *Delegations from the Secretary.* Pursuant to Executive Order 10450, "Security Requirements for Government Employment" (18 FR 2489, Apr. 29, 1953); Executive Order 12968, "Access to Classified Information," 3 CFR, 1995 Comp., p. 391; Executive Order 13526, "Classified National Security Information" (75 FR 707, Jan. 5, 2010); and 5 CFR part 732, and with due deference for delegations to other Departmental Management officials, the following delegations of authority are made by the Secretary to the Director, Office of Homeland Security and Emergency Coordination, pursuant to the Director's responsibilities as the Departmental National Security Programs Officer, as designated by the Secretary:

(1) Manage the personnel security functions of the Department, which includes sole authority for making eligibility access determinations and sponsoring Sensitive Compartmented Information clearances; obtaining and granting security clearances for USDA employees and consultants and volunteers on authorized agreements; and suspending, denying, or revoking access to national security information (Executive Order 12968 "Access to Classified Information", as amended), notwithstanding the Secretary's authority to remove an employee for national security reasons as outlined in 5 U.S.C. 7532.

(2) Manage, coordinate, develop, and promulgate policies and training regarding personnel security, and serve as USDA's personnel security liaison to the Office of Personnel Management and Director of National Intelligence.

(3) Review and develop recommendations on classifying, declassifying, and safeguarding national security information for which the Secretary is responsible as Original Classification Authority.

(b) *Delegations from the Assistant Secretary for Administration.* Pursuant to § 2.24(a)(8), and with due deference for delegations to other Departmental Management officials, the following delegations of authority are made by the Assistant Secretary for Administration to the Director, Office of Homeland Security and Emergency Coordination:

(1) Administer the Department Emergency Preparedness Program. This includes:

(i) Coordinate the delegations and assignments made to the Department under the Defense Production Act of 1950, 50 U.S.C. App. 2061, *et seq.;* the Robert T. Stafford Disaster Relief and Emergency Assistance Act, 42 U.S.C. 5121, *et seq.;* and by Executive Orders 12148, "Federal Emergency Management," 3 CFR, 1979 Comp., p. 412, 12919, "National Defense Industrial Resources Preparedness," 3 CFR, 1994 Comp., p. 901, and 12656, "Assignment of Emergency Preparedness Responsibilities," 3 CFR, 1988 Comp., p. 585; or any successor to these Executive Orders, to ensure that the Department has sufficient capabilities to respond to any occurrence, including natural disaster, military attack, technological emergency, or any other all hazards incident.

(ii) Manage the Department Emergency Operations Center at Headquarters and the Secretary's alternative facilities; provide senior staff with international, national, and regional situational awareness reports; and provide and maintain current information systems technology and National Security Systems to support USDA executive crisis management capability.

(iii) Provide facilities and equipment to facilitate inter-agency coordination during emergencies.

(iv) Activate the USDA incident management system in accordance with the National Response Framework and the National Incident Management System in the event of a major incident; and provide oversight and coordination of the Department's Emergency Support Functions as outlined in the National Response Framework.

(v) Develop and promulgate policies for the Department regarding emergency preparedness and national security, including matters relating to anti-terrorism and agriculture-related emergency preparedness planning, both national and international, and guidance to USDA State and County Emergency Boards.

(vi) Establish and provide oversight of a Department-wide training program for the National Incident Management System to include Incident Command System, National Response Framework, Continuity programs, and Critical Infrastructure Protection program.

(vii) Provide representation and liaison for the Department in contacts with other Federal entities and organizations, including the National Security Council, Homeland Security Council, Office of Management and Budget, Department of Homeland Security, Federal Emergency Management Agency, Office of The Director of National Intelligence, and Department of Defense concerning matters of a national security, natural disaster, other emergencies, and agriculture/food-related international civil emergency planning and related activities.

(viii) Act as the primary USDA representative for anti-terrorism activities.

(ix) Develop and submit a coordinated budget request for homeland security requirements.

(x) Provide guidance and direction regarding radiological emergency preparedness programs and the implementation of the National Response Framework's Nuclear/Radiological Incident Annex to Departmental staff offices, mission areas, and agencies.

(xi) Provide program leadership and coordination for USDA's radiological emergency preparedness requirements with respect to Emergency Management and Assistance (44 CFR parts 350–352).

(xii) Represent USDA on the Federal Radiological Preparedness Coordinating Committee (FRPCC) and Regional Assistance Committees (RACs) and assist them in carrying out their functions.

(xiii) Support USDA in its management of the Department's emergency response program with respect to radiological emergency response activities.

(xiv) Exercise responsibility for USDA response efforts when a spill of national significance is declared under the Oil Pollution Act of 1990, as determined by the Assistant Secretary for Administration.

(2) Provide for the personal security to the Secretary and the Deputy Secretary.

(3) Serve as the primary point of contact for Government Accountability Office (GAO) and Office of the Inspector General (OIG) audits of USDA homeland security activities.

(4) Coordinate interaction between Department agencies and private sector businesses and industries in emergency planning and public education under Department authorities delegated or assigned under the National Response Framework, National Infrastructure Protection Plan, Defense Production Act of 1950, 50 U.S.C. App. 2061, *et seq.,* and Robert T. Stafford Disaster Relief and Emergency Assistance Act, 42 U.S.C. 5121, *et seq.*

(5) Oversee the Department's ability to collect and disseminate information and prepare for an agricultural disease emergency, agroterrorist act, or other threat to agricultural biosecurity, and coordinate such activities among agencies and offices within the Department (7 U.S.C. 8912).

(6) Administer a funded competitive grant program to support the development and expansion of advanced training programs in agricultural biosecurity planning and response for food science professionals and veterinarians; administer a funded competitive grant and low-interest loan assistance program to assist States in assessing agricultural disease response capability (7 U.S.C. 8913).

(7) Promulgate Departmental policies, standards, techniques, and procedures; and represent the Department in maintaining the security of physical facilities and providing security guidance to the Food and Agricultural Sector nationwide.

(i) Lead and coordinate the development and maintenance of a mission critical facility inventory with agency involvement to ensure proper security countermeasures are implemented in the Department's most critical infrastructure.

(ii) Provide guidance to USDA agencies in matters of physical security through use of physical security assessments and development of mitigation strategies.

(iii) Provide guidance to USDA agencies and the Food and Agricultural Sector in matters of security through use of assessments and development of mitigation strategies.

(iv) Represent and act as liaison for the Department in contacts with other Federal security entities and organizations, including the Interagency Security Committee and the Department of Homeland Security.

(v) Provide guidance and direction to ensure physical security and agriculture/food security are fully integrated in USDA's security preparations, which are reported to and coordinated with the White House.

(vi) Provide assistance to the USDA agencies in preparation for and during a disaster to identify critical assets and possible alternate storage locations.

(vii) Conduct physical security investigations and compliance reviews Department-wide.

(viii) Review and provide coordinated technical physical security assessments for all new construction of laboratories, data centers, germplasm repositories, and other mission critical infrastructure during the design phase, and all leased facilities prior to contract award.

(ix) Oversee and manage physical security aspects of the Common Identification Card (LincPass) Program to ensure National Institute of Standards and Technology (NIST) and General Services Administration (GSA) compliancy within the National Capital Region and the physical access to USDA facilities.

(x) Provide enterprise connectivity to agency physical access control systems that provide cost leveraging and provisioning/de-provisioning nationwide.

(8) Provide oversight and coordination of the development and administration of the Department Continuity Program. This includes:

(i) Provide guidance and direction regarding continuity of operations to the Office of the Secretary, Departmental staff offices, mission areas, and agencies.

(ii) Represent and act as liaison for the Department in contacts with other Federal entities and organizations concerning matters of assigned continuity program responsibilities.

(iii) Oversee Department continuity of operations and emergency relocation facility planning, development, equipping, and preparedness to ensure that resources are in a constant state of readiness.

(9) Provide for the development and administration of a Public Trust program for the safeguarding of national security information:

(i) Direct and administer USDA's public trust program established pursuant to 5 CFR part 731 and Executive Order 13488, "Granting Reciprocity on Excepted Service and Federal Contractor Employee Fitness and Reinvestigating Individuals in Positions of Public Trust" (74 FR 4111, Jan. 22, 2009).

(ii) Direct and administer USDA's program under which information is safeguarded pursuant to Executive Order 13526, "Classified National Security Information" (75 FR 707, Jan. 5, 2010), or subsequent orders.

(iii) Establish and maintain Information Security policies and procedures for classifying, declassifying, safeguarding, and disposing of classified national security information and materials.

(iv) Investigate or delegate authority to investigate any potential compromises of classified national security information and take corrective action for violations or infractions under section 5.5 (b), of Executive Order 13526 or any subsequent order.

(v) Develop and maintain oversight of all facilities throughout USDA where classified national security information is or will be safeguarded, discussed, or processed including sole authority to liaison with the Central Intelligence Agency concerning guidance, approval, requirements, and oversight of USDA secure facilities.

(vi) Act as the USDA focal point to identify, receive, disseminate and safeguard USDA related intelligence information as required; convey information to USDA policy officials; and liaise with the intelligence community, as appropriate.

(10) Control within USDA the acquisition, use, and disposal of material and equipment that can be a source of ionizing radiation.

(i) Promulgate policies and procedures for ensuring the safety of USDA employees, the public, and the environment resulting from USDA's use of ionizing radiation sources.

(ii) Maintain and ensure compliance with the Nuclear Regulatory Commission regulations (Title 10, Code of Federal Regulations) and license(s) issued to USDA for the acquisition, use, and disposal of radioactive materials.

§ 2.96 Director, Office of Operations.

(a) *Delegations.* Pursuant to § 2.24(a)(9), and with due deference for delegations to other Departmental Management officials, the following delegations of authority are made by the Assistant Secretary for Administration to the Director, Office of Operations:

(1) Provide services relating to facilities management and daily operational support for agencies and offices occupying USDA's headquarters complex, George Washington Carver Center, and, in coordination with the General Services Administration (GSA), USDA leased facilities in the Washington, DC metropolitan area, as well as at emergency relocation sites and certain critical facilities specified by the Assistant Secretary for Administration in the following areas:

(i) Acquiring, leasing, utilizing, constructing, maintaining, and disposing of real property, including control of space assignments, and architecture and engineering design oversight.

(ii) Sustainable Operations leadership and management in the areas of internal energy efficiency, conservation and recycling in support of Executive Orders 13423, "Strengthening Federal Environmental, Energy, and Transportation Management," 3 CFR, 2007 Comp., p. 193, and 13514, "Federal Leadership in Environmental, Energy, and Economic Performance" (74 FR 52117, Oct. 8, 2009).

(iii) Occupational health, safety, and related functions; and environmental compliance pursuant to Executive Order 12088, "Federal Compliance with Pollution Control Standards," 3 CFR, 1978 Comp., p. 243, to ensure actions are taken for the prevention, control, and abatement of environmental pollution.

(2) Provide centralized Departmental business services including:

(i) Printing, copy reproducing, offset composing, mail management and delivery, and automated mailing lists.

(ii) USDA Nationwide mail management policy.

(iii) Operation of a disability resource center for all USDA agencies in the Washington, DC metropolitan area and nationwide in the areas of accessible technologies and reasonable accommodations.

(iv) General supplies, shipping and receiving, warehouse and labor services.

(v) Operation of a USDA Consolidated Forms and Publications Distribution Center for storage and nationwide distribution of USDA program forms and publications.

(vi) Excess personal property operations with disposition responsibility for all USDA agencies in the Washington, DC metropolitan area.

(vii) Operation of a GSA authorized Federal excess property Sales Center for USDA property and other government agencies in the Washington, DC metropolitan area via Memorandum of Understanding (MOU).

(3) Promulgate Departmental regulations, standards, techniques, and procedures and represent the Department in managing and maintaining a comprehensive physical and technical security program including access control, management of special police officer and guard services, executive driving, parking, ID badging in accordance with HSPD–12, occupant emergency and warden services at the USDA Headquarters Complex, George Washington Carver Center and, in coordination with GSA, USDA leased facilities in the Washington, DC metropolitan area, as well as at emergency relocation sites and certain critical facilities specified by the Assistant Secretary for Administration.

(4) Provide management and oversight of the Secretary's People's Garden initiative and the USDA Visitor's Center for education and outreach to USDA and the public.

(5) Represent the Department in contacts with other organizations or agencies on matters related to assigned responsibilities.

(b) [Reserved]

§ 2.97 Director, Office of the Executive Secretariat.

(a) *Delegations.* Pursuant to § 2.24(a)(10), and with due deference for delegations to other Departmental Management officials, the following delegations of authority are made by the Assistant Secretary for Administration to the Director, Office of the Executive Secretariat:

(1) Exercise responsibility for all correspondence control and related records management functions for the Office of the Secretary.

(2) Provide administrative, editorial, and project management support services to the Immediate Office of the Secretary.

(b) [Reserved]

§ 2.98 Director, Management Services.

(a) *Delegations.* Pursuant to § 2.24(a)(11), and with due deference for delegations to other Departmental Management officials, the following delegations of authority are made by the Assistant Secretary for Administration to the Director, Management Services:

(1) Provide a full range of services, including: Procurement of supplies,

services, and equipment; travel support, conference management, general administrative support including coordination of office renovations and moves (within USDA Whitten Building); budget, accounting, fiscal and related financial management services; information technology services related to end user office automation, desktop computers, enterprise networking support, handheld devices and voice telecommunications; with authority to take actions required by law or regulation to perform said services for:

(A) The Secretary of Agriculture.

(B) The general officers of the Department, except the Inspector General.

(C) The offices and agencies reporting to the Assistant Secretary for Administration.

(D) Any other offices or agencies of the Department as may be agreed.

(2) Prepare responses to requests under the Freedom of Information Act with authority to take actions as required by law or regulation for the offices and agencies reporting to the Assistant Secretary for Administration.

(3) Administer the records management program in support of Departmental Management, and prepare and coordinate responses to management audits by the Inspector General and the Government Accountability Office, with authority to take actions as required by law or regulation for the offices and agencies reporting to the Assistant Secretary for Administration.

(4) Provide administrative and financial management support in the award and administration of grants, cooperative agreements, and Memoranda of Understanding in support of Departmental Management programs, with authority to take actions as required by law or regulation for the offices and agencies reporting to the Assistant Secretary for Administration.

(5) Provide human resources operational services for the following (with the exception of Senior Executives, Senior Level positions, and Political Appointees):

(i) The Secretary of Agriculture.

(ii) The general officers of the Department.

(iii) The offices and agencies reporting to the Assistant Secretary for Administration.

(iv) Any other offices and agencies of the Department as may be agreed.

(b) [Reserved]

■ 29. Revise subpart Q to read as follows:

Subpart Q—Delegations of Authority by the General Counsel

Sec.
2.200 Deputy General Counsel.

§ 2.200 Deputy General Counsel.

Pursuant to § 2.31, the following delegation of authority is made by the General Counsel to the Deputy General Counsel, to be exercised only during the absence or unavailability of the General Counsel: Perform all duties and exercise all powers which are now or which may hereafter be delegated to the General Counsel.

■ 30. Revise subpart R to read as follows:

Subpart R—Delegations of Authority by the Assistant Secretary for Civil Rights

Sec.
2.300 Deputy Assistant Secretary for Civil Rights.

§ 2.300 Deputy Assistant Secretary for Civil Rights.

Pursuant to § 2.88, the following delegation of authority is made by the Assistant Secretary for Civil Rights to the Deputy Assistant Secretary for Civil Rights, to be exercised only during the absence or unavailability of the Assistant Secretary: Perform all duties and exercise all powers which are now or which may hereafter be delegated to the Assistant Secretary.

■ 31. Add a new subpart S to read as follows:

Subpart S—Delegations of Authority by the Chief Information Officer

Sec.
2.400 Deputy Chief Information Officer.

§ 2.400 Deputy Chief Information Officer.

Pursuant to § 2.89, the following delegation of authority is made by the Chief Information Officer to the Deputy Chief Information Officer, to be exercised only during the absence or unavailability of the Chief Information Officer: Perform all duties and exercise all powers which are now or which may hereafter be delegated to the Chief Information Officer.

■ 32. Add a new subpart T to read as follows:

Subpart T—Delegations of Authority by the Chief Financial Officer

Sec.
2.500 Deputy Chief Financial Officer.
2.501 Director, Office of Budget and Program Analysis.

§ 2.500 Deputy Chief Financial Officer.

Pursuant to § 2.90, the following delegation of authority is made by the Chief Financial Officer to the Deputy Chief Financial Officer, to be exercised only during the absence or unavailability of the Chief Financial Officer: Perform all the duties and exercise all the powers which are now or which may hereafter be delegated to the Chief Financial Officer.

§ 2.501 Director, Office of Budget and Program Analysis.

(a) The following delegations of authority are made by the Chief Financial Officer to the Director, Office of Budget and Program Analysis:

(1) Serve as the Department's Budget Officer and exercise general responsibility and authority for all matters related to the Department's budgeting affairs including:

(i) Resource administration, including all phases of the acquisition, and distribution of funds and staff years.

(ii) Legislative and regulatory reporting and related activities.

(2) Provide staff assistance for the Secretary, general officers, and other Department and agency officials.

(3) Formulate and promulgate Departmental budgetary, legislative and regulatory policies and procedures.

(4) Represent the Department in contacts with the Office of Management and Budget, the Government Accountability Office, the Department of the Treasury, Congressional Committees on Appropriations, and other organizations and agencies on matters related to his or her responsibility.

(5) Coordinate and/or conduct policy and program analyses on agency operations and proposals to assist the Secretary, general officers and other Department and agency officials in formulating and implementing USDA policies and programs.

(6) Review and analyze legislation, regulations, and policy options to determine their impact on USDA programs and policy objectives and on the Department's budget.

(7) Monitor ongoing studies with significant program or policy implications.

(b) [Reserved]

Dated: July 8, 2010.

Thomas J. Vilsack,

Secretary of Agriculture.

[FR Doc. 2010–17465 Filed 7–20–10; 4:15 pm]

BILLING CODE 3410–90–P

Reader Aids

Federal Register

Vol. 75, No. 141

Friday, July 23, 2010

CUSTOMER SERVICE AND INFORMATION

Federal Register/Code of Federal Regulations	
General Information, indexes and other finding aids	**202–741–6000**
Laws	**741–6000**
Presidential Documents	
Executive orders and proclamations	**741–6000**
The United States Government Manual	**741–6000**
Other Services	
Electronic and on-line services (voice)	**741–6020**
Privacy Act Compilation	**741–6064**
Public Laws Update Service (numbers, dates, etc.)	**741–6043**
TTY for the deaf-and-hard-of-hearing	**741–6086**

ELECTRONIC RESEARCH

World Wide Web

Full text of the daily Federal Register, CFR and other publications is located at: **http://www.gpoaccess.gov/nara/index.html**

Federal Register information and research tools, including Public Inspection List, indexes, and links to GPO Access are located at: **http://www.archives.gov/federal__register**

E-mail

FEDREGTOC-L (Federal Register Table of Contents LISTSERV) is an open e-mail service that provides subscribers with a digital form of the Federal Register Table of Contents. The digital form of the Federal Register Table of Contents includes HTML and PDF links to the full text of each document.

To join or leave, go to **http://listserv.access.gpo.gov** and select *Online mailing list archives, FEDREGTOC-L, Join or leave the list (or change settings);* then follow the instructions.

PENS (Public Law Electronic Notification Service) is an e-mail service that notifies subscribers of recently enacted laws.

To subscribe, go to **http://listserv.gsa.gov/archives/publaws-l.html** and select *Join or leave the list (or change settings);* then follow the instructions.

FEDREGTOC-L and **PENS** are mailing lists only. We cannot respond to specific inquiries.

Reference questions. Send questions and comments about the Federal Register system to: **fedreg.info@nara.gov**

The Federal Register staff cannot interpret specific documents or regulations.

Reminders. Effective January 1, 2009, the Reminders, including Rules Going Into Effect and Comments Due Next Week, no longer appear in the Reader Aids section of the Federal Register. This information can be found online at **http://www.regulations.gov.**

CFR Checklist. Effective January 1, 2009, the CFR Checklist no longer appears in the Federal Register. This information can be found online at **http://bookstore.gpo.gov/.**

FEDERAL REGISTER PAGES AND DATE, JULY

37975–38390 1
38391–38692 2
38693–38914 6
38915–39132 7
39133–39442 8
39443–39628 9
39629–39786 12
39787–40718 13
40719–41072 14
41073–41364 15
41365–41690 16
41691–41962 19
41963–42278 20
42279–42570 21
42571–43030 22
43031–43394 23

CFR PARTS AFFECTED DURING JULY

At the end of each month, the Office of the Federal Register publishes separately a List of CFR Sections Affected (LSA), which lists parts and sections affected by documents published since the revision date of each title.

2 CFR

Ch. 58 41691
902 39443
3186 39133

3 CFR

Proclamations:
8539 38905
8540 38911
8541 42279

Executive Orders:
13546 39439
13366 (revoked by 13547) 43023
13547 43023

Administrative Orders:
Memorandum of June 28, 2010 38387
Memorandum of June 30, 2010 38913
Memorandum of July 13, 2010 41687
Memorandum of July 19, 2010 43029
Notices:
Notice of June 19, 2010 42281

5 CFR

2425 42283
2429 42283
4401 42270

Proposed Rules:
532 39460

6 CFR

Proposed Rules:
5 39144

7 CFR

2 43366
63 43031
205 38693
301 41073
760 41365
800 41693
916 38696
917 38696
920 43038
924 43039
946 43042
948 38698
983 43045
1413 41963
1430 41365
1455 39135
1720 42571
4280 41695

Proposed Rules:
701 41389
1755 38042
1221 41392
1429 41397

8 CFR

274a 42575

9 CFR

102 40719
103 40719
104 40719
108 40719
112 40719
113 40719
114 40719
116 40719
124 40719

10 CFR

9 41368
72 ..... 41369, 42292
430 42579
431 37975
607 39443
1703 39629

Proposed Rules:
37 40756
72 ..... 41404, 42339
73 42000
217 41405
430 ..... 41102, 42611, 42612
431 ..... 41102, 41103
1023 38042

12 CFR

Proposed Rules:
615 39392
1237 39462
1777 39462

14 CFR

13 41968
25 38391
39 ..... 37990, 37991, 37994, 37997, 38001, 38007, 38009, 38011, 38014, 38017, 38019, 38394, 38397, 38404, 39143, 39787, 39790, 39795, 39798, 39801, 39803, 39804, 39811, 39814, 39818, 42585, 42589, 42592, 43049
47 41968
71 ..... 38406, 39145, 39146, 39147, 39148, 39149, 40719, 41074, 41075, 41076, 41077, 41983, 41984, 41985
73 42598
77 42296
91 ..... 41968, 41986
97 ..... 39150, 39152, 42308, 42310
121 39629
217 41580
234 ..... 41580, 42599
241 41580

248 41580
250 41580
291 41580
298 41580
385 41580
Proposed Rules:
39 ....38052, 38056, 38058, 38061, 38064, 38066, 38941, 38943, 38945, 38947, 38950, 38953, 38956, 39185, 39189, 39192, 39472, 39863, 39869, 40757, 41104, 42340, 43092, 43095, 43097, 43099, 43101, 43103, 43105
71 ....38753, 41772, 41773, 41774, 42012, 42014, 42630, 42631
91 ....39196, 42015

15 CFR
742 41078
774 41078
Proposed Rules:
922 40759

16 CFR
305 41696
1611 42311
1630 42315
1631 42315
Proposed Rules:
1218 42017
1219 43308
1220 43308
1500 43308
1508 43107
1509 43107

17 CFR
200 ....42270, 42599
275 41018
Proposed Rules:
16 41775
38 42633
39 42633
40 42633
240 42984
242 39626
270 42984
274 42984
275 42984

18 CFR
38 43059
40 43059
Proposed Rules:
410 41106

20 CFR
404 39154
416 39154
418 41084
Proposed Rules:
404 42639
416 42639

21 CFR
522 38699
573 41725
814 41986
1310 38915

23 CFR
772 39820
Proposed Rules:
650 42643

24 CFR
5 41087
84 41087
85 41087
Proposed Rules:
3280 39871

26 CFR
1 38700
53 38700
54 ....38700, 41726, 43330
301 38700
602 ....38700, 43330
Proposed Rules:
54 ....41787, 43109
300 43110

27 CFR
9 42601
40 42605
41 42605
44 42605
46 42605
71 42605
Proposed Rules:
40 42659
41 42659
44 42659
45 42659
46 42659

29 CFR
2201 41370
2550 41600
2590 ....41726, 43330
4022 41091
Proposed Rules:
1910 38646
1915 38646
1917 38646
1918 38646
1926 38646
1928 38646
4003 42662
4903 42662

31 CFR
Ch. V 38212
Proposed Rules:
103 41788

33 CFR
100 ....38408, 38710, 39161, 39445, 39448, 41373, 41987
117 ....38411, 38412, 38712
165 ....38019, 38021, 38412, 38415, 38714, 38716, 38718, 38721, 38723, 38923, 38926, 39163, 39166, 39632, 39839, 40726, 41376, 41762, 41764, 41987, 42608
Proposed Rules:
100 ....41119, 41789
165 ....38754, 39197

34 CFR
Proposed Rules:
600 42190
668 42190
682 42190

36 CFR
7 39168

37 CFR
Proposed Rules:
386 39891

38 CFR
3 ....39843, 41092

39 CFR
111 41989
3050 38725
3055 38725
Proposed Rules:
20 39475
111 ....39477, 41790
3050 39200
3055 38757

40 CFR
52 ....38023, 38745, 39366, 39633, 39635, 40726, 41312, 43062, 43066
63 41991
81 ....39635, 41379, 43069
98 39736
180 ....38417, 39450, 39455, 40729, 40736, 40741, 40745, 40751, 42318, 42324, 43072, 43076
300 43082
355 39852
370 39852
721 42330
Proposed Rules:
2 39094
52 ....38757, 40760, 40762, 42018, 42342, 42346, 42672, 43114
60 42676
63 ....42030, 42676
80 42238
81 ....41421, 42018, 43114
122 38068
123 38068
141 40926
142 40926
152 38958
191 41421
194 41421
257 41121
261 41121
264 41121
265 41121
268 41121
271 41121
300 ....42361, 43115
302 41121
403 38068
501 38068
503 38068
745 38959

41 CFR
102-5 41994
Proposed Rules:
60-741 43116
102-38 40763

42 CFR
423 38026
447 38748
457 38748
Proposed Rules:
50 42362
73 42363
405 40040
409 ....40040, 43236
410 40040
411 40040
413 40040
414 40040
415 40040
418 43236
424 ....40040, 43236
484 43236
488 39641
489 43236

44 CFR
64 38749

45 CFR
147 ....41726, 43330
301 38612
302 38612
303 38612
305 38612
308 38612
614 40754
1186 39133
Proposed Rules:
94 42362
160 40868
164 40868

47 CFR
1 41932
24 43088
27 43088
64 39859
73 ....41092, 41093, 41932
90 41381
101 41932
Proposed Rules:
1 ....38959, 41338
22 38959
24 38959
27 38959
73 41123
90 38959
101 38959

48 CFR
Ch. I 38674, 38691, 39414, 39420
2 ....38675, 38683
4 ....38675, 38683, 38684, 39414
7 38683
10 38683
12 39414
13 38683
15 38675
18 38683
19 38687
22 38689
25 38689
26 38683
31 38675
32 38675
42 ....38675, 39414
45 38675
52 ....38675, 38683, 38684, 38689, 39414, 43090
205 40714
210 40714
212 40712
216 40716
232 40712
252 ....40712, 40717
516 41093
552 41093

3002 41097
3007 41097
3009 41097
3016 41097
3034 41097
3035 41097
3052 41097

Proposed Rules:

901 38042
902 38042
903 38042
904 38042
906 38042
907 38042
908 38042
909 38042
911 38042
914 38042
915 38042
916 38042
917 38042
952 38042

49 CFR

39 38878
40 38422
213 41282
237 41282
387 38423

Proposed Rules:

171 42364
173 42364
231 38432
395 40765
611 39492

50 CFR

17 42490
622 39638
635 41995
648 ....38935, 39170, 41996, 43090
660 ....38030, 39178, 41383, 42610
679 ....38430, 38936, 38937, 38938, 38939, 38940, 39183, 39638, 39639, 39861, 41999, 42336, 42337, 42338, 43090

Proposed Rules:

16 38069
17 ....38441, 42033, 42040, 42054, 42059
216 38070
300 38758
679 ....38452, 38454, 39892, 41123, 41424, 43118
680 39892

LIST OF PUBLIC LAWS

This is a continuing list of public bills from the current session of Congress which have become Federal laws. It may be used in conjunction with "P L U S" (Public Laws Update Service) on 202–741–6043. This list is also available online at *http://www.archives.gov/federal-register/laws.html*.

The text of laws is not published in the **Federal Register** but may be ordered in "slip law" (individual pamphlet) form from the Superintendent of Documents, U.S. Government Printing Office, Washington, DC 20402 (phone, 202–512–1808). The text will also be made available on the Internet from GPO Access at *http://www.gpoaccess.gov/plaws/index.html*. Some laws may not yet be available.

S. 3104/P.L. 111–202
To permanently authorize Radio Free Asia, and for other purposes. (July 13, 2010; 124 Stat. 1373)

Last List July 12, 2010

Public Laws Electronic Notification Service (PENS)

PENS is a free electronic mail notification service of newly enacted public laws. To subscribe, go to *http://listserv.gsa.gov/archives/publaws-l.html*

Note: This service is strictly for E-mail notification of new laws. The text of laws is not available through this service. **PENS** cannot respond to specific inquiries sent to this address.