AUTHENTICATED
U.S. GOVERNMENT
INFORMATION
GPO

Federal Register

6–21–10 Monday
Vol. 75 No. 118 June 21, 2010

Pages 34923–35288

The **FEDERAL REGISTER** (ISSN 0097–6326) is published daily, Monday through Friday, except official holidays, by the Office of the Federal Register, National Archives and Records Administration, Washington, DC 20408, under the Federal Register Act (44 U.S.C. Ch. 15) and the regulations of the Administrative Committee of the Federal Register (1 CFR Ch. I). The Superintendent of Documents, U.S. Government Printing Office, Washington, DC 20402 is the exclusive distributor of the official edition. Periodicals postage is paid at Washington, DC.

The **FEDERAL REGISTER** provides a uniform system for making available to the public regulations and legal notices issued by Federal agencies. These include Presidential proclamations and Executive Orders, Federal agency documents having general applicability and legal effect, documents required to be published by act of Congress, and other Federal agency documents of public interest.

Documents are on file for public inspection in the Office of the Federal Register the day before they are published, unless the issuing agency requests earlier filing. For a list of documents currently on file for public inspection, see *www.federalregister.gov.*

The seal of the National Archives and Records Administration authenticates the Federal Register as the official serial publication established under the Federal Register Act. Under 44 U.S.C. 1507, the contents of the **Federal Register** shall be judicially noticed.

The **Federal Register** is published in paper and on 24x microfiche. It is also available online at no charge as one of the databases on GPO Access, a service of the U.S. Government Printing Office.

The online edition of the **Federal Register**, *www.gpoaccess.gov/nara,* available through GPO Access, is issued under the authority of the Administrative Committee of the Federal Register as the official legal equivalent of the paper and microfiche editions (44 U.S.C. 4101 and 1 CFR 5.10). It is updated by 6 a.m. each day the **Federal Register** is published and includes both text and graphics from Volume 59, Number 1 (January 2, 1994) forward.

For more information about GPO Access, contact the GPO Access User Support Team, call toll free 1-888-293-6498; DC area 202-512-1530; fax at 202-512-1262; or via e-mail at *gpoaccess@gpo.gov.* The Support Team is available between 7:00 a.m. and 9:00 p.m. Eastern Time, Monday–Friday, except official holidays.

The annual subscription price for the **Federal Register** paper edition is $749 plus postage, or $808, plus postage, for a combined **Federal Register, Federal Register** Index and List of CFR Sections Affected (LSA) subscription; the microfiche edition of the **Federal Register** including the **Federal Register** Index and LSA is $165, plus postage. Six month subscriptions are available for one-half the annual rate. The prevailing postal rates will be applied to orders according to the delivery method requested. The price of a single copy of the daily **Federal Register,** including postage, is based on the number of pages: $11 for an issue containing less than 200 pages; $22 for an issue containing 200 to 400 pages; and $33 for an issue containing more than 400 pages. Single issues of the microfiche edition may be purchased for $3 per copy, including postage. Remit check or money order, made payable to the Superintendent of Documents, or charge to your GPO Deposit Account, VISA, MasterCard, American Express, or Discover. Mail to: U.S. Government Printing Office—New Orders, P.O. Box 979050, St. Louis, MO 63197-9000; or call toll free 1-866-512-1800, DC area 202-512-1800; or go to the U.S. Government Online Bookstore site, see *bookstore.gpo.gov.*

There are no restrictions on the republication of material appearing in the **Federal Register.**

How To Cite This Publication: Use the volume number and the page number. Example: 75 FR 12345.

Postmaster: Send address changes to the Superintendent of Documents, Federal Register, U.S. Government Printing Office, Washington, DC 20402, along with the entire mailing label from the last issue received.

SUBSCRIPTIONS AND COPIES

PUBLIC

Subscriptions:

Paper or fiche	**202–512–1800**
Assistance with public subscriptions	**202–512–1806**

General online information **202–512–1530; 1–888–293–6498**

Single copies/back copies:

Paper or fiche	**202–512–1800**
Assistance with public single copies	**1–866–512–1800 (Toll-Free)**

FEDERAL AGENCIES

Subscriptions:

Paper or fiche	**202–741–6005**
Assistance with Federal agency subscriptions	**202–741–6005**

FEDERAL REGISTER WORKSHOP

THE FEDERAL REGISTER: WHAT IT IS AND HOW TO USE IT

FOR: Any person who uses the Federal Register and Code of Federal Regulations.

WHO: Sponsored by the Office of the Federal Register.

WHAT: Free public briefings (approximately 3 hours) to present:

1. The regulatory process, with a focus on the Federal Register system and the public's role in the development of regulations.
2. The relationship between the Federal Register and Code of Federal Regulations.
3. The important elements of typical Federal Register documents.
4. An introduction to the finding aids of the FR/CFR system.

WHY: To provide the public with access to information necessary to research Federal agency regulations which directly affect them. There will be no discussion of specific agency regulations.

WHEN: Tuesday, July 13, 2010
9 a.m.–12:30 p.m.

WHERE: Office of the Federal Register
Conference Room, Suite 700
800 North Capitol Street, NW.
Washington, DC 20002

RESERVATIONS: (202) 741–6008

Printed on recycled paper.

Contents

Federal Register

Vol. 75, No. 118

Monday, June 21, 2010

Agency for Healthcare Research and Quality
NOTICES
Agency Information Collection Activities; Proposals, Submissions, and Approvals, 35038–35041

Agricultural Marketing Service
PROPOSED RULES
Changes to the Quality Regulations for Shelled Walnuts: Walnuts Grown in California, 34950–34953

Agriculture Department
See Agricultural Marketing Service
See Commodity Credit Corporation
See Forest Service
See National Agricultural Statistics Service
See Natural Resources Conservation Service
NOTICES
Agency Information Collection Activities; Proposals, Submissions, and Approvals, 34970–34971

Antitrust Division
NOTICES
National Cooperative Research and Production Act of 1993:
IMS Global Learning Consortium, Inc.; Correction, 35088
Information Card Foundation, 35088
National Shipbuilding Research Program, 35089
National Warheads and Energetics Consortium, 35089

Army Department
NOTICES
Meetings:
Board of Visitors, United States Military Academy (USMA), 34989

Centers for Disease Control and Prevention
NOTICES
Agency Information Collection Activities; Proposals, Submissions, and Approvals, 35041–35042

Coast Guard
RULES
Safety Zones:
Chicago Tall Ships Fireworks, Lake Michigan, Chicago, IL, 34936–34939
Fireworks for the Virginia Lake Festival, Buggs Island Lake, Clarksville, VA, 34934–34936
Michigan City Super Boat Grand Prix, Lake Michigan, Michigan City, IN, 34932–34934
Neptune Deep Water Port, Atlantic Ocean, Boston, MA, 34929–34932
Parade of Ships, Seattle SeaFair Fleet Week, Pier 66, Elliott Bay, WA, 34927–34929

Commerce Department
See International Trade Administration
See National Oceanic and Atmospheric Administration

Commodity Credit Corporation
RULES
Conservation Stewardship Program, 34924

Commodity Futures Trading Commission
NOTICES
Order Permitting the Kansas City Board of Trade Clearing Corporation to Clear Over-The-Counter Wheat Calendar Swaps, etc., 34983–34987

Consumer Product Safety Commission
RULES
Revocation of Regulations Banning Certain Baby-Walkers, 35279–35282
Safety Standard for Infant Walkers, 35266–35279
Third Party Testing for Certain Children's Products; Infant Walkers:
Requirements for Accreditation of Third Party Conformity Assessment Bodies, 35282–35285
NOTICES
Agency Information Collection Activities; Proposals, Submissions, and Approvals:
Safety Standard for Infant Walkers, 35286–35287

Defense Acquisition Regulations System
RULES
Defense Federal Acquisition Regulation Supplement:
Multiyear Contract Authority for Electricity from Renewable Energy Sources (DFARS Case 2008–D006), 34942–34943
Para-Aramid Fibers and Yarns Manufactured in a Qualifying Country (DFARS Case 2008–D024), 34943–34946
Technical Amendment, 34946

Defense Department
See Army Department
See Defense Acquisition Regulations System
See Navy Department
NOTICES
Meetings:
Defense Business Board, 34987–34988
Defense Science Board 2010 Summer Study on Enhancing Adaptability of our Military Forces, 34988

Education Department
NOTICES
Agency Information Collection Activities; Proposals, Submissions, and Approvals, 34989–34990
Applications for New Awards for Fiscal Year (FY) 2010:
Rehabilitation Research and Training Centers—Employment Outcomes for Individuals who are Blind or Visually Impaired, 34990–34994
Inviting Applications for New Awards for Fiscal Year (FY) 2010:
Predominantly Black Institutions Formula Grant Program, 34994–34997
National Institute on Disability and Rehabilitation Research—Disability and Rehabilitation Research Projects and Centers Program:
Rehabilitation Research and Training Centers—Employment Outcomes for Individuals who are Blind or Visually Impaired, 34997–35000

Energy Department
See Federal Energy Regulatory Commission

NOTICES
Meetings:
Blue Ribbon Commission on Americas Nuclear Future, Disposal Subcommittee, 35000–35001
Blue Ribbon Commission on Americas Nuclear Future, Reactor and Fuel Cycle Technologies Subcommittee, 35001

Environmental Protection Agency
RULES
Approval and Promulgation of Air Quality Implementation Plans:
Final Approval and Promulgation of State Implementation Plans; Carbon Monoxide and Volatile Organic Compounds; Ohio, 34939–34941
PROPOSED RULES
Approval and Promulgation of Air Quality Implementation Plans:
Amendment to Consumer Products and Architectural and Industrial Maintenance Coatings Regulations; Pennsylvania, 34964–34966
Hazardous and Solid Waste Management System:
Identification and Listing of Special Wastes; Disposal of Coal Combustion Residuals from Electric Utilities, 35128–35264
NOTICES
Agency Information Collection Activities; Proposals, Submissions, and Approvals:
Cooling Water Intake Structure Phase II Existing Facilities (Renewal), 35021–35023
Meetings:
Hydraulic Fracturing Research Study, 35023–35024
No Discharge Zone Determination:
North Carolina Waters Along the Entire Length of Brunswick and Pender Counties, etc., 35024–35025
Request for Nominations for 2010 Clean Air Excellence Awards Program, 35025–35026
Science Advisory Board Staff Office:
Request for Nominations of Experts for a Nutrient Criteria Review Panel, 35026–35027

Federal Aviation Administration
RULES
Airworthiness Directives:
CFM International, S.A. CFM56–5, –5B, and –7B Series Turbofan Engines, 34924–34925
PROPOSED RULES
Airworthiness Directives:
GA 8 Airvan (Pty) Ltd Models GA8 and GA8 TC320 Airplanes, 34953–34956
Robert E. Rust, Jr. Model DeHavilland DH.C1 Chipmunk 21, DH.C1 Chipmunk 22, and DH.C1 Chipmunk 22A Airplanes, 34956–34958
Existence of Proposed Airworthiness Design Standards for Acceptance Under the Primary Category Rule:
Orlando Helicopter Airways (OHA), Inc., Models Cessna 172I, 172K, 172L, and 172M, 34953
NOTICES
Approval Noise Compatibility Program for Buckeye Municipal Airport, Town of Buckeye, AZ, 35122–35123

Federal Bureau of Investigation
NOTICES
Agency Information Collection Activities; Proposals, Submissions, and Approvals:
Violent Criminal Apprehension Program, 35087–35088

Federal Communications Commission
RULES
Review of the Commission's Program Access Rules and Examination of Programming Tying Arrangements, 34941–34942
NOTICES
Agency Information Collection Activities; Proposals, Submissions, and Approvals, 35027–35028

Federal Energy Regulatory Commission
PROPOSED RULES
Five-Year Review of Oil Pipeline Pricing Index, 34959–34960
NOTICES
Agency Information Collection Activities; Proposals, Submissions, and Approvals, 35001–35007
Applications:
Dominion Transmission, Inc, 35008–35009
Portland Water Bureau, 35007–35008
Wyckoff Gas Storage Company LLC, 35007
Cancellation of Dispute Resolution Panel Meeting and Technical Conference:
York Haven Power Company, LLC, 35009
Combined Filings, 35010–35016
Initial Market-Based Rate Filing:
Brookfield Energy Marketing LP, 35017
Citizens Choice Energy, LLC, 35017
Eagle Industrial Power Services (IL), LLC, 35018
EDF Industrial Power Services (NY), LLC, 35016–35017
GenConn Energy LLC, 35018
Petitions for Declaratory Order:
Puget Sound Energy, Inc., 35018–35019
Rejection of Application:
Hampshire Paper Company, 35019
Requests Under Blanket Authorization:
Kinder Morgan Interstate Gas Transmission LLC, 35019–35020
Soliciting Scoping Comments:
Wilkesboro Hydroelectric Company, LLC, 35020–35021
Technical Conference:
Reliability Standards Development and NERC and Regional Entity Enforcement, 35021

Federal Highway Administration
NOTICES
Environmental Impact Statements; Availability, etc.:
Monroe County, New York, 35124

Federal Housing Finance Agency
NOTICES
Privacy Act; Systems of Records, 35028–35030

Federal Motor Carrier Safety Administration
NOTICES
Meetings; Sunshine Act, 35124–35125

Federal Reserve System
NOTICES
Formations of, Acquisitions by, and Mergers of Bank Holding Companies, 35030
Pubic Hearings:
Home Mortgage Disclosure Act, 35030–35033

Federal Trade Commission
NOTICES
Analysis of Agreement Containing Consent Order to Aid Public Comment:
U-Haul International, Inc. and AMERCO, 35033–35035

Federal Transit Administration
NOTICES
Buy America Waiver for Minivans and Minivan Chassis, 35123–35124

Fish and Wildlife Service
NOTICES
Final Comprehensive Conservation Plan and Finding of No Significant Impact:
Tampa Bay Refuges, FL, 35080–35081

Food and Drug Administration
NOTICES
Approval of a Supplemental New Animal Drug Application:
Penicillin G Procaine Suspension, 35044–35045
Authorization of Emergency Use of Certain In Vitro Diagnostic Devices; Availability, 35045–35070

Foreign Assets Control Office
NOTICES
Unblocking of Specifically Designated Nationals and Blocked Persons Pursuant to the Foreign Narcotics Kingpin Designation Act, 35125

Forest Service
NOTICES
Meetings:
New Mexico Collaborative Forest Restoration Program Technical Advisory Panel, 34973
Uinta–Wasatch–Cache National Forest Resource Advisory Committee, 34973

Health and Human Services Department
See Agency for Healthcare Research and Quality
See Centers for Disease Control and Prevention
See Food and Drug Administration
See Indian Health Service
See National Institutes of Health
NOTICES
Statement of Organization, Functions and Delegations of Authority:
Office of the Assistant Secretary for Preparedness and Response, 35035–35038

Homeland Security Department
See Coast Guard

Indian Health Service
NOTICES
Competitive Grant Applications for American Indians Into Medicine Program, 35070–35075

Interior Department
See Fish and Wildlife Service
See Land Management Bureau
See National Park Service
See Surface Mining Reclamation and Enforcement Office

International Trade Administration
PROPOSED RULES
Import Administration IA ACCESS Pilot Program, 34960
NOTICES
Alignment of Final Countervailing Duty Determination with Final Antidumping Duty Determination:
Drill Pipe from the People's Republic of China, 34974–34975
Extension of Time Limit for the Final Results of the 2008–2009 Administrative Review:
Certain Frozen Warmwater Shrimp from Thailand, 34976
Final Results and Partial Rescission of the 14th Antidumping Duty Administrative Review:
Fresh Garlic from the People's Republic of China, 34976–34980
Final Results of the Antidumping Duty Administrative Review:
Circular Welded Non-Alloy Steel Pipe from the Republic of Korea, 34980–34982
Postponement of Preliminary Determination in the Countervailing Duty Investigation:
Aluminum Extrusions from the People's Republic of China, 34982–34983

International Trade Commission
NOTICES
Full Five-Year Reviews Concerning The Antidumping Duty Orders:
Magnesium from China and Russia, 35086–35087
Meetings; Sunshine Act, 35087

Justice Department
See Antitrust Division
See Federal Bureau of Investigation
See Prisons Bureau
NOTICES
Lodging of Consent Decree Under The Clean Water Act, 35087

Labor Department
See Occupational Safety and Health Administration

Land Management Bureau
NOTICES
Call for Nominations:
Wild Horse and Burro Advisory Board, 35078–35079
Draft Environmental Impact Statement/Staff Assessment:
California Desert Conservation Area Plan for the Calico Solar Project, San Bernardino County, CA; Correction, 35079
Environmental Impact Statements; Availability, etc.:
Proposed Arturo Mine Project, Elko County, NV, 35079–35080
Intent to Establish and Call for Nominations for the New Mexico Resource Advisory Councils, 35081–35082
Proposed Reinstatement of Terminated Oil and Gas Lease:
Texas, 35082–35083
Wyoming, 35082
Realty Action:
Direct Sale of Public Lands in Lincoln County, Idaho, 35083–35084
Recreation and Public Purposes Act Classification, Elko County, Nevada, 35085–35086
Recreation and Public Purposes Act Classification; Lease and Conveyance of Public Land, Boise County, Idaho, 35084–35085

National Aeronautics and Space Administration
NOTICES
Meetings:
NASA Advisory Council; Science Committee, 35091

National Agricultural Statistics Service
NOTICES
Agency Information Collection Activities; Proposals, Submissions, and Approvals, 34971–34972

Invitation for Nominations to the Advisory Committee on Agriculture Statistics, 34972–34973
Opportunity to Submit Content Request for the Agricultural Energy Program Surveys, 34973–34974

National Highway Traffic Safety Administration
RULES
Federal Motor Vehicle Theft Prevention Standards:
Final Listing of 2011 Light Duty Truck Lines Subject to the Requirements of This Standard and Exempted Vehicle Lines for Model Year 2011, 34946–34949
PROPOSED RULES
Insurer Reporting Requirements:
List of Insurers Required to File Reports, 34966–34969

National Institutes of Health
NOTICES
Agency Information Collection Activities; Proposals, Submissions, and Approvals:
The National Children's Study (NCS); Vanguard (pilot) Study, 35042–35044
Meetings:
Center for Scientific Review, 35075–35076
Division of Program Coordination, Planning, and Strategic Initiatives, 35076
Eunice Kennedy Shriver National Institute of Child Health and Human Development, 35077–35078
National Center for Complementary and Alternative Medicine, 35075
National Institute of Environmental Health Sciences, 35076–35077
National Institute of General Medical Sciences, 35075, 35077

National Oceanic and Atmospheric Administration
NOTICES
Estuary Habitat Restoration Council's Intent to Revise its Estuary Habitat Restoration Strategy; Request for Public Comment, 34975

National Park Service
NOTICES
Acceptance of Concurrent Legislative Jurisdiction in Kansas, 35078

Natural Resources Conservation Service
NOTICES
Proposed Changes to Section IV of the Virginia State Technical Guide, 34974

Navy Department
NOTICES
Intent to Grant Exclusive Patent License:
Fiber Optic Sensor Systems Technology Corporation, 34988–34989

Occupational Safety and Health Administration
NOTICES
Meetings:
Maritime Advisory Committee for Occupational Safety and Health, 35090–35091

Personnel Management Office
RULES
General Schedule Locality Pay Areas, 34923–34924
NOTICES
Agency Information Collection Activities; Proposals, Submissions, and Approvals, 35091–35092
Agency Information Collection Activities; Proposals, Submissions, and Approvals:
Customer Satisfaction Surveys, 35093
Performance Measurement Surveys, 35092
Program Services Evaluation Surveys, 35092–35093
Civil Service Retirement System:
Present Value Factors, 35093–35095
Excepted Service, 35095–35096
Federal Employees Retirement System:
Present Value Factors, 35096–35098
Normal Cost Percentages:
Federal Employees Retirement System, 35098
Privacy Act; Systems of Records, 35099–35102

Postal Regulatory Commission
NOTICES
New Postal Products, 35102–35103

Prisons Bureau
NOTICES
Records of Decisions:
Proposed Contract Award to House District of Columbia-Sentenced Felons and Criminal Aliens, etc.; Availability, 35089–35090

Securities and Exchange Commission
NOTICES
Meetings; Sunshine Act, 35104
Order of Suspension of Trading:
Aphton Corp. et al., 35104–35105
Self-Regulatory Organizations; Proposed Rule Changes:
Financial Industry Regulatory Authority, Inc., 35105–35110
NASDAQ OMX PHLX, Inc., 35115–35117
NASDAQ Stock Market LLC, 35111–35115

Small Business Administration
NOTICES
Disaster Declaration:
Nebraska, 35104
Oklahoma, 35103–35104
Tennessee, 35103
West Virginia, 35103

State Department
NOTICES
Agency Information Collection Activities; Proposals, Submissions, and Approvals:
Application for a U.S. Passport, 35120
Application for a U.S. Passport by Mail, 35118
Application For a U.S. Passport; Name Change, Data Correction, and Limited Passport Book Replacement, 35117–35118
Application for Additional Visa Pages or Miscellaneous Passport Services, 35119–35120
Request for Determination of Possible Loss of United States Citizenship, 35118–35119
Statement of Consent or Special Circumstances: Issuance of a Passport to a Minor Under Age (16), 35120–35121
Intergovernmental Panel on Climate Change Special Report Review, 35121–35122
Meetings:
International Telecommunication Advisory Committee, 35122

Statistical Reporting Service
See National Agricultural Statistics Service

Surface Mining Reclamation and Enforcement Office
PROPOSED RULES
Pennsylvania Regulatory Program, 34960–34964

Transportation Department
See Federal Aviation Administration
See Federal Highway Administration
See Federal Motor Carrier Safety Administration
See Federal Transit Administration
See National Highway Traffic Safety Administration
RULES
Posting of Flight Delay Data on Websites, 34925–34927

Treasury Department
See Foreign Assets Control Office

Separate Parts In This Issue

Part II
Environmental Protection Agency, 35128–35264

Part III
Consumer Product Safety Commission, 35266–35287

Reader Aids

Consult the Reader Aids section at the end of this page for phone numbers, online resources, finding aids, reminders, and notice of recently enacted public laws.

To subscribe to the Federal Register Table of Contents LISTSERV electronic mailing list, go to http://listserv.access.gpo.gov and select Online mailing list archives, FEDREGTOC-L, Join or leave the list (or change settings); then follow the instructions.

CFR PARTS AFFECTED IN THIS ISSUE

A cumulative list of the parts affected this month can be found in the Reader Aids section at the end of this issue.

5 CFR
531 34923

7 CFR
1470 34924

Proposed Rules:
984 34950

14 CFR
39 34924
234 34925

Proposed Rules:
21 34953
39 (2 documents) 34953, 34956

16 CFR
1216 (2 documents) 35266, 35282
1500 35279

18 CFR

Proposed Rules:
342 34959

19 CFR

Proposed Rules:
351 34960

30 CFR

Proposed Rules:
938 (2 documents) 34960, 34962

33 CFR
165 (5 documents) 34927, 34929, 34932, 34934, 34936

40 CFR
52 34939

Proposed Rules:
52 34964
257 35128
261 35128
264 35128
265 35128
268 35128
271 35128
302 35128

47 CFR
76 34941

48 CFR
217 34942
225 34943
239 34946
241 34942
252 34943

49 CFR
541 34946

Proposed Rules:
544 34966

Rules and Regulations

Federal Register
Vol. 75, No. 118
Monday, June 21, 2010

This section of the FEDERAL REGISTER contains regulatory documents having general applicability and legal effect, most of which are keyed to and codified in the Code of Federal Regulations, which is published under 50 titles pursuant to 44 U.S.C. 1510.

The Code of Federal Regulations is sold by the Superintendent of Documents. Prices of new books are listed in the first FEDERAL REGISTER issue of each week.

OFFICE OF PERSONNEL MANAGEMENT

5 CFR Part 531

RIN 3206–AL96

General Schedule Locality Pay Areas

AGENCY: U.S. Office of Personnel Management.

ACTION: Final rule.

SUMMARY: On behalf of the President's Pay Agent, the U.S. Office of Personnel Management is issuing final regulations on the locality pay program for General Schedule employees. Originally published on September 28, 2009, as an interim rule with a request for comments, the regulations moved the McGuire Air Force Base, NJ, and Fort Dix, NJ, Philadelphia locality pay area portions of the new Joint Base McGuire-Dix-Lakehurst, from the Philadelphia locality pay area to the New York locality pay area. We received no comments on the interim rule and adopt the final rule without change. We are also adding a corresponding note to the definition of the Philadelphia locality pay area to clarify that the Joint Base is not part of the Philadelphia locality pay area and changing titling of the Portland, OR, locality pay area to correspond to a change in the name of the Portland Metropolitan Statistical Area.

DATES: *Effective on* July 21, 2010.

Applicability Date: The regulations were applicable on the first day of the first pay period that began on or after September 28, 2009.

FOR FURTHER INFORMATION CONTACT: Allan Hearne, (202) 606–2838;

Fax: (202) 606–4264; *e-mail: pay-performance-policy@opm.gov.*

SUPPLEMENTARY INFORMATION: Section 5304 of title 5, United States Code, authorizes locality pay for General Schedule (GS) employees with duty stations in the United States and its territories and possessions.

Section 5304(f) of title 5, United States Code, authorizes the President's Pay Agent (the Secretary of Labor, the Director of the Office of Management and Budget, and the Director of the Office of Personnel Management) to determine locality pay areas. Most locality pay areas follow county lines under the methods recommended by the Federal Salary Council (Council) and adopted by the President's Pay Agent. However, exceptions are made for Federal facilities that cross county borders under criteria recommended by the Council and approved by the Pay Agent.

As part of the base realignment and closure process, the Department of Defense established Joint Base McGuire-Dix-Lakehurst effective October 1, 2009. McGuire Air Force Base and Fort Dix, in Burlington County, New Jersey, were in the Philadelphia locality pay area while Lakehurst, in Ocean County, New Jersey, was in the New York locality pay area. The President's Pay Agent concluded that the Joint Base McGuire-Dix-Lakehurst met the Council's existing criteria to be included in the New York locality pay area. Accordingly, on September 28, 2009, the Office of Personnel Management published an interim rule to move the Philadelphia locality pay area portions of the joint base from the Philadelphia locality pay area to the New York locality pay area. We received no comments on the interim rule and adopt it as final with a clarification that the Philadelphia locality pay area does not include Joint Base McGuire-Dix-Lakehurst.

On December 1, 2009, the Office of Management and Budget (OMB) published OMB Bulletin No. 10–02 making changes in metropolitan statistical areas (MSAs). One of these changes renamed the Portland-Vancouver-Beaverton, OR–WA MSA as the Portland-Vancouver-Hillsboro, OR–WA MSA; but this change did not alter the geographic definition of the MSA. Since we use MSAs as the core definition of locality pay areas, we are also renaming the Portland-Vancouver-Beaverton, OR–WA locality pay area as the Portland-Vancouver-Hillsboro, OR–WA locality pay area and updating the MSA name in the regulation to match the new OMB MSA name. There are no changes in the geographic definition of the locality pay area or in employee entitlements as a result of this name change.

E.O. 12866, Regulatory Review

The Office of Management and Budget has reviewed this rule in accordance with E.O. 12866.

Paperwork Reduction Act

This document does not contain proposed information collection requirements subject to the Paperwork Reduction Act of 1995, Public Law 104–13.

Regulatory Flexibility Act

I certify that these regulations will not have a significant economic impact on a substantial number of small entities because they will apply only to Federal agencies and employees.

List of Subjects in 5 CFR Part 531

Government employees, Law enforcement officers, Wages.

U.S. Office of Personnel Management.

John Berry,

Director.

■ Accordingly, OPM adopts as a final rule the interim rule published at 74 FR 49307 on September 28, 2009 with the following changes:

PART 531—PAY UNDER THE GENERAL SCHEDULE

■ 1. The authority citation for part 531 continues to read as follows:

Authority: 5 U.S.C. 5115, 5307, and 5338; sec. 4 of Public Law 103–89, 107 Stat. 981; and E.O. 12748, 56 FR 4521, 3 CFR, 1991 Comp., p. 316; Subpart B also issued under 5 U.S.C. 5303(g), 5305, 5333, 5334(a) and (b), and 7701(b)(2); Subpart D also issued under 5 U.S.C. 5335 and 7701(b)(2); Subpart E also issued under 5 U.S.C. 5336; Subpart F also issued under 5 U.S.C. 5304 and 5305; E.O. 12883, 58 FR 63281, 3 CFR, 1993 Comp., p. 682; and E.O. 13106, 63 FR 68151, 3 CFR, 1998 Comp., p. 224.

Subpart F—Locality-Based Comparability Payments

■ 2. In § 531.603, paragraphs (b)(20), (b)(21), and (b)(24) are revised to read as follows:

§ 531.603 Locality pay areas.

* * * * *

(b) * * *

(20) New York-Newark-Bridgeport, NY–NJ–CT–PA—consisting of the New

York-Newark-Bridgeport, NY–NJ–CT–PA CSA, plus Monroe County, PA, Warren County, NJ, and all of Joint Base McGuire-Dix-Lakehurst;

(21) Philadelphia-Camden-Vineland, PA–NJ–DE–MD—consisting of the Philadelphia-Camden-Vineland, PA–NJ–DE–MD CSA excluding Joint Base McGuire-Dix-Lakehurst, plus Kent County, DE, Atlantic County, NJ, and Cape May County, NJ;

* * * * *

(24) Portland-Vancouver-Hillsboro, OR–WA—consisting of the Portland-Vancouver-Hillsboro, OR–WA MSA, plus Marion County, OR, and Polk County, OR;

* * * * *

[FR Doc. 2010–14981 Filed 6–18–10; 8:45 am]

BILLING CODE 6325–39–P

DEPARTMENT OF AGRICULTURE

Commodity Credit Corporation

7 CFR Part 1470

RIN 0578–AA43

Conservation Stewardship Program

AGENCY: Commodity Credit Corporation, Natural Resources Conservation Service, United States Department of Agriculture.

ACTION: Final rule; correction.

SUMMARY: The Natural Resources Conservation Service is correcting a final rule that appeared in the **Federal Register** of June 3, 2010 (75 FR 31653). The document 2010–12699, concerning the Conservation Stewardship Program, contained an error in the words of "issuance" at the end of the preamble.

DATES: *Effective Date:* The rule is effective June 3, 2010.

FOR FURTHER INFORMATION CONTACT: Dwayne Howard, Branch Chief, Financial Assistance Programs Division, Department of Agriculture, Natural Resources Conservation Service, 1400 Independence Avenue, SW., Room 5237 South Building, Washington, DC. 20250; *Telephone:* (202) 720–1845; *Fax:* (202) 720–4265; or *e-mail: Dwayne.howard@wdc.usda.gov.*

SUPPLEMENTARY INFORMATION: In FR Doc. 2010–12699 appearing on page 31653 in the **Federal Register** of Thursday, June 3, 2010, the following correction is made:

Words of Issuance [Corrected]

(1) On page 31653, in the second column, the Words of Issuance that read "For the reasons stated above, the CCC adds part 1470 of the CFR to read as follows:" is corrected to read: "For the reasons stated above, the CCC revises part 1470 of Title 7 of the CFR to read as follows:"

Signed June 15, 2010, in Washington, DC.

Teressa Davis,

Rulemaking Manager, Natural Resources Conservation Service.

[FR Doc. 2010–14847 Filed 6–18–10; 8:45 am]

BILLING CODE 3410–16–P

DEPARTMENT OF TRANSPORTATION

Federal Aviation Administration

14 CFR Part 39

[Docket No. FAA–2010–0026; Directorate Identifier 2010–NE–03–AD; Amendment 39–16340; AD 2010–13–09]

RIN 2120–AA64

Airworthiness Directives; CFM International, S.A. CFM56–5, –5B, and –7B Series Turbofan Engines

AGENCY: Federal Aviation Administration (FAA), DOT.

ACTION: Final rule.

SUMMARY: The FAA is adopting a new airworthiness directive (AD) for CFM International, S.A. CFM56–5, –5B, and –7B series turbofan engines. This AD requires removing from service, nine stage 3 low-pressure turbine (LPT) disks, identified by serial number (S/N). This AD results from the discovery of a material nonconformity requiring removal of the disk before the certified disk life of certain stage 3 LPT disks. We are issuing this AD to prevent uncontained failure of the stage 3 LPT disk and damage to the airplane.

DATES: This AD becomes effective July 26, 2010.

ADDRESSES: The Docket Operations office is located at Docket Management Facility, U.S. Department of Transportation, 1200 New Jersey Avenue, SE., West Building Ground Floor, Room W12–140, Washington, DC 20590–0001.

FOR FURTHER INFORMATION CONTACT: Antonio Cancelliere, Aerospace Engineer, Engine Certification Office, FAA, Engine & Propeller Directorate, 12 New England Executive Park, Burlington, MA 01803; *e-mail: antonio.cancelliere@faa.gov;* telephone (781) 238–7751; fax (781) 238–7199.

SUPPLEMENTARY INFORMATION: The FAA proposed to amend 14 CFR part 39 with a proposed AD. The proposed AD applies to CFM International, S.A. CFM56–5, –5B, and –7B series turbofan engines. We published the proposed AD in the **Federal Register** on March 18, 2010 (75 FR 13045). That action proposed to require removing from service, nine stage 3 LPT disks, identified by S/N.

Examining the AD Docket

You may examine the AD docket on the Internet at *http://www.regulations.gov;* or in person at the Docket Operations office between 9 a.m. and 5 p.m., Monday through Friday, except Federal holidays. The AD docket contains this AD, the regulatory evaluation, any comments received, and other information. The street address for the Docket Operations office (telephone (800) 647–5527) is provided in the **ADDRESSES** section. Comments will be available in the AD docket shortly after receipt.

Comments

We provided the public the opportunity to participate in the development of this AD. We have considered the comments received. Two commenters support the proposal as written.

Remove the Airbus A340 Reference

One commenter, CFM International, S.A., requests that we remove the reference to the Airbus A340 airplane from the applicability paragraph, as the engines used on that airplane are CFM56–5C engines, and use a different disk P/N not affected by this AD.

We agree. We removed the A340 reference from the AD.

Request To Reference the Disk Part Number

CFM International, S.A., requests that we reference the disk part number of 336–002–006–0, along with the affected disk serial numbers, in the applicability paragraph to help identify the parts to be removed.

We agree. We added the disk part number to the applicability paragraph.

Request To Clarify the Applicability Paragraph

CFM International, S.A., requests clarification of the applicability paragraph that none of these affected disk S/Ns were originally installed on any CFM56–5 turbofan engines, however, that disk P/N is certified for use on CFM56–5 engines.

We agree and changed the applicability paragraph.

Request To Reference European Aviation Safety Agency (EASA) Related AD

CFM International, S.A., requests that we reference the EASA related AD in our AD.

We agree and added a reference to EASA AD 2009–0270 in the AD.

Conclusion

We have carefully reviewed the available data, including the comments received, and determined that air safety and the public interest require adopting the AD with the changes described previously. We have determined that these changes will neither increase the economic burden on any operator nor increase the scope of the AD.

Costs of Compliance

We estimate that this AD will affect two engines installed on airplanes of U.S. registry. The pro-rated cost of the replacement parts is $40,375 per engine. We estimate that no additional labor costs will be incurred to perform the required disk removals, because the removals will be done at time of engine shop visit. Based on these figures, we estimate the total cost of the AD to U.S. operators to be $80,750.

Authority for This Rulemaking

Title 49 of the United States Code specifies the FAA's authority to issue rules on aviation safety. Subtitle I, section 106, describes the authority of the FAA Administrator. Subtitle VII, Aviation Programs, describes in more detail the scope of the Agency's authority.

We are issuing this rulemaking under the authority described in subtitle VII, part A, subpart III, section 44701, "General requirements." Under that section, Congress charges the FAA with promoting safe flight of civil aircraft in air commerce by prescribing regulations for practices, methods, and procedures the Administrator finds necessary for safety in air commerce. This regulation is within the scope of that authority because it addresses an unsafe condition that is likely to exist or develop on products identified in this rulemaking action.

Regulatory Findings

We have determined that this AD will not have federalism implications under Executive Order 13132. This AD will not have a substantial direct effect on the States, on the relationship between the national government and the States, or on the distribution of power and responsibilities among the various levels of government.

For the reasons discussed above, I certify that this AD:

(1) Is not a "significant regulatory action" under Executive Order 12866;

(2) Is not a "significant rule" under DOT Regulatory Policies and Procedures (44 FR 11034, February 26, 1979); and

(3) Will not have a significant economic impact, positive or negative, on a substantial number of small entities under the criteria of the Regulatory Flexibility Act.

We prepared a summary of the costs to comply with this AD and placed it in the AD Docket. You may get a copy of this summary at the address listed under **ADDRESSES**.

List of Subjects in 14 CFR Part 39

Air transportation, Aircraft, Aviation safety, Safety.

Adoption of the Amendment

■ Accordingly, under the authority delegated to me by the Administrator, the Federal Aviation Administration amends 14 CFR part 39 as follows:

PART 39—AIRWORTHINESS DIRECTIVES

■ 1. The authority citation for part 39 continues to read as follows:

Authority: 49 U.S.C. 106(g), 40113, 44701.

§ 39.13 [Amended]

■ 2. The FAA amends § 39.13 by adding the following new airworthiness directive:

2010–13–09 CFM International, S.A.: Amendment 39–16340. Docket No. FAA–2010–0026; Directorate Identifier 2010–NE–03–AD.

Effective Date

(a) This airworthiness directive (AD) becomes effective July 26, 2010.

Affected ADs

(b) None.

Applicability

(c) This AD applies to:

(1) CFM International CFM56–5, –5B, and –7B series turbofan engines with stage 3 low-pressure turbine (LPT) disks part number (P/N) 336–002–006–0, installed with the following serial numbers (S/Ns), DE255844, DE256388, DE256622, DE256623, DE256625, DE256627, DE256628, DE256631, and DE256637.

(2) CFM International, S.A. has stated that none of these affected disk S/Ns were originally installed on any CFM56–5 turbofan engine, however, that disk P/N is certified for use on CFM56–5 engines.

(3) The –5 and –5B series engines are installed on, but not limited to, Airbus A318, A319, A320, and A321 airplanes, and the –7B series engines are installed on, but not limited to, Boeing 737 series airplanes.

Unsafe Condition

(d) This AD results from the discovery of a material nonconformity requiring removal of the disk before the certified disk life of certain stage 3 LPT disks. We are issuing this AD to prevent uncontained failure of the stage 3 LPT disk and damage to the airplane.

Compliance

(e) You are responsible for having the actions required by this AD performed within the compliance time specified unless the actions have already been done.

Removal of Affected Stage 3 LPT Disks From Service

(f) Before accumulating 9,500 cycles-since-new, remove stage 3 LPT disks from service.

(g) After the effective date of this AD, do not reinstall any stage 3 LPT disk removed from service per paragraph (f) of this AD into any engine.

Alternative Methods of Compliance

(h) The Manager, Engine Certification Office, has the authority to approve alternative methods of compliance for this AD if requested using the procedures found in 14 CFR 39.19.

Related Information

(i) Contact Antonio Cancelliere, Aerospace Engineer, Engine Certification Office, FAA, Engine & Propeller Directorate, 12 New England Executive Park, Burlington, MA 01803; *e-mail: antonio.cancelliere@faa.gov;* telephone (781) 238–7751; fax (781) 238–7199, for more information about this AD.

(j) European Aviation Safety Agency AD 2009–0270, dated December 17, 2009, also addresses the subject of this AD.

(k) CFM International, S.A. Service Bulletin (SB) No. CFM56–5B S/B 72–0733, dated October 26, 2009, and SB No. CFM56–7B S/B 72–0743, dated October 26, 2009, pertain to the subject of this AD. Contact CFM International, Technical Publications Department, 1 Neumann Way, Cincinnati, OH 45215; telephone (513) 552–2800; fax (513) 552–2816, for a copy of this service information.

Material Incorporated by Reference

(l) None.

Issued in Burlington, Massachusetts, on June 15, 2010.

Peter A. White,

Assistant Manager, Engine and Propeller Directorate, Aircraft Certification Service.

[FR Doc. 2010–14819 Filed 6–18–10; 8:45 am]

BILLING CODE 4910–13–P

DEPARTMENT OF TRANSPORTATION

Office of the Secretary

14 CFR Part 234

[Docket No. DOT–OST–2007–0022]

RIN No. 2105–AE02

Posting of Flight Delay Data on Web Sites

AGENCY: Office of the Secretary (OST), Department of Transportation (DOT).

ACTION: Direct Final Rule, request for comments.

SUMMARY: This direct final rule amends the time period for uploading flight

performance information to an air carrier's Web site from anytime between the 20th and 23rd day of the month to the fourth Saturday of the month. The intended effect of this rule is to provide regulatory relief to industry by allowing carriers to follow standard industry practice of updating flight information such as schedule changes on Saturday. This action is necessary to address difficulties concerning implementation and compliance with the requirement to post flight delay data on carriers' Web sites. Moreover, this change would further the Department's goal of having all carriers upload flight information at the same time, thus ensuring passengers are comparing flight performance data from the same time period. The amendment contained in this rule is a minor substantive change, in the public interest, and unlikely to result in adverse comment.

DATES: This final rule is effective July 21, 2010, unless an adverse comment or notice to file an adverse comment is received by July 6, 2010. OST will publish in the **Federal Register** a timely document confirming the effective date of this final rule.

ADDRESSES: You may file comments identified by the docket number DOT–OST–2007–0022 by any of the following methods:

○ *Federal eRulemaking Portal:* go to *http://www.regulations.gov* and follow the online instructions for submitting comments.

○ *Mail:* Docket Management Facility, U.S. Department of Transportation, 1200 New Jersey Ave., SE., Room W12–140, Washington, DC 20590–0001.

○ *Hand Delivery or Courier:* West Building Ground Floor, Room W12–140, 1200 New Jersey Ave., SE., between 9 a.m. and 5 p.m. ET, Monday through Friday, except Federal Holidays.

○ *Fax:* (202) 493–2251.

Instructions: You must include the agency name and docket number DOT–OST–2007–0022 or the Regulatory Identification Number (RIN) for the rulemaking at the beginning of your comment. All comments received will be posted without change to *http://www.regulations.gov,* including any personal information provided.

Privacy Act: Anyone is able to search the electronic form of all comments received in any of our dockets by the name of the individual submitting the comment (or signing the comment if submitted on behalf of an association, a business, a labor union, etc.). You may review DOT's complete Privacy Act statement in the **Federal Register** published on April 11, 2000 (65 FR 19477–78), or you may visit *http://DocketsInfo.dot.gov*.

Docket: For access to the docket to read background documents or comments received, go to *http://www.regulations.gov* or to the street address listed above. Follow the online instructions for accessing the docket.

FOR FURTHER INFORMATION CONTACT: Blane A. Workie, Deputy Assistant General Counsel, Office of the Assistant General Counsel for Aviation Enforcement and Proceedings, U.S. Department of Transportation, 1200 New Jersey Ave., SE., Washington, DC 20590, 202–366–9342 (phone), 202–366–7152 (fax), *blane.workie@dot.gov* (e-mail).

SUPPLEMENTARY INFORMATION:

Background

The Department of Transportation requires that certificated air carriers that account for at least 1 percent of domestic scheduled passenger revenues (reporting carriers) provide certain flight delay data on their Web sites. Under that provision, a reporting carrier must display on its Web site between the 20th and 23rd day of the month the prior month's flight delay information for each flight it operates and for each flight its U.S. code-share partners operate for which schedule information is available. More specifically, the provision requires that reporting carriers provide on their Web sites the following on-time performance information: (1) The percentage of arrivals that were on time—*i.e.,* within 15 minutes of scheduled arrival time; (2) the percentage of arrivals that were more than 30 minutes late (including special highlighting if the flight was more than 30 minutes late more than 50 percent of the time); and (3) the percentage of flight cancellations if 5 percent or more of the flight's operations were canceled in the month covered. The first time carriers must load the flight delay information onto their Web sites is between July 20 and 23, 2010, for June data.

On May 7, 2010, the Air Transport Association of America (ATA), the Regional Airline Association (RAA) and the Air Carrier Association of America (ACAA) submitted a joint petition to the Department requesting a change of the date to upload flight data from the 20th to the 23rd of the month, which sometimes does not fall on a Saturday, to a set Saturday, as this would allow carriers to follow standard industry practice of updating flight information such as schedule changes on Saturdays. In addition, the carrier associations requested that the specific date for uploading flight performance information on Web sites be the fourth Saturday of the month to avoid a conflict with the requirement to file other flight performance information with the Department's Bureau of Transportation Statistics (BTS) on the 15th day of the month, which at times falls on the third Saturday of the month. The carrier associations explain that carriers use the same technical personnel and resources for both activities and having the carriers file required BTS data and upload flight performance information to a carrier's Web site on the same day would increase their cost burdens. ATA, RAA, and ACAA are also concerned that if DOT were to require that Web sites be updated on the third Saturday of the month there would be certain months where the reporting carriers would be required to upload information on their Web sites before submitting the flight data to BTS. ATA, RAA, and ACAA represent all but one of the carriers covered by the requirement to post flight delay data. The only reporting carrier that is not represented by these associations is Mesa, and the carrier associations have indicated in their petition that Mesa supports their request.

In addition, this change in the rule would be beneficial to consumers as it would require carriers to load data for the previous month on a particular day instead of allowing carriers to load information on their Web site over several days, thereby ensuring passengers are better able to compare flight performance data. It is also worth noting that when we requested comment in the NPRM on the proposal that carriers load data for the previous month between the 20th and 23rd day of the current month, we received no comments. *See* 73 FR 74586 (December 8, 2008).

The Direct Final Rule Procedure

On January 30, 2004, OST published a final rule adopting direct final rulemaking procedures intended to expedite the rulemaking process for noncontroversial rules (69 FR 4455). By using direct final rulemaking, OST can reduce the time necessary to develop, review, clear and publish a rule to which no adverse public comment is anticipated by eliminating the need to publish separate proposed and final rules.

OST anticipates that this amendment will not result in adverse or negative comment and, therefore, is issuing it as a direct final rule. Unless a written adverse or negative comment, or a written notice of intent to submit an adverse or negative comment is received within the comment period, the

regulation will become effective on the date specified above. In that event, after the close of the comment period OST will publish a document in the **Federal Register** indicating that no adverse or negative comments were received and confirming the date on which the final rule will become effective. If OST does receive, within the comment period, an adverse or negative comment, or written notice of intent to submit such a comment, a document withdrawing the direct final rule will be published in the **Federal Register**, and a notice of proposed rulemaking may be published with a new comment period.

Comments Invited

Interested parties are invited to participate in this rulemaking by submitting such written data, views, or arguments, as they may desire. Comments that provide the factual basis supporting the views and suggestions presented are particularly helpful in developing reasoned regulatory decisions on the proposal.

Regulatory Analyses and Notices

A. Executive Order 12866 (Regulatory Planning and Review) and DOT Regulatory Policies and Procedures

This final rule is not a significant regulatory action under Executive Order 12866 and the Department of Transportation's Regulatory Policies and Procedures. Accordingly, this final rule has not been reviewed by the Office of Management and Budget (OMB).

B. Regulatory Flexibility Act

Pursuant to section 605 of the Regulatory Flexibility Act (RFA), 5 U.S.C. 605(b), as amended by the Small Business Regulatory Enforcement and Fairness Act of 1996 (SBREFA), DOT certifies that this final rule does not have a significant economic impact on a substantial number of small entities. The final rule does not impose any duties or obligations on small entities.

C. Executive Order 13132 (Federalism)

This Final Rule does not have a substantial direct effect on the States, on the relationship between the national Government and the States, or on the distribution of power and responsibilities among the various levels of government, and therefore does not have federalism implications.

D. Executive Order 13084

This Final Rule has been analyzed in accordance with the principles and criteria contained in Executive Order 13084 ("Consultation and Coordination with Indian Tribal Governments"). Because the rule does not significantly or uniquely affect the communities of the Indian tribal governments or impose substantial direct compliance costs on them, the funding and consultation requirements of Executive Order 13084 do not apply.

E. Paperwork Reduction Act

The Paperwork Reduction Act of 1995 (PRA) (44 U.S.C. 3501 *et seq.)* requires that DOT consider the impact of paperwork and other information collection burdens imposed on the public and, under the provisions of PRA section 3507(d), obtain approval from the Office of Management and Budget (OMB) for each collection of information it conducts, sponsors, or requires through regulations. DOT has determined that there is no new information collection requirements associated with this final rule.

F. Unfunded Mandates Reform Act

The Department has determined that the requirements of Title II of the Unfunded Mandates Reform Act of 1995 do not apply to this Final Rule.

Issued June 16, 2010, in Washington, DC.

Ray LaHood,

Secretary of Transportation.

List of Subjects in 14 CFR Part 234

Air carriers, Consumer protection, Reporting and recordkeeping requirements.

■ For the reasons set forth in the preamble, the Department amends 14 CFR part 234 as follows:

PART 234—AIRLINE SERVICE QUALITY PERFORMANCE REPORTS

■ 1. The authority citation for Part 234 continues to read as follows:

Authority: 49 U.S.C. 329 and chapters 401 and 417.

■ 2. In § 234.11, revise paragraph (c) to read as follows:

§ 234.11 Disclosure to consumers.

* * * * *

(c) The first time each carrier must load the information whose disclosure is required under paragraphs (a) and (b) of this section onto its Web site is on Saturday, July 24, 2010, for June data. Carriers must load all subsequent flight performance information on the fourth Saturday of the month following the month that is being reported.

* * * * *

[FR Doc. 2010–15000 Filed 6–17–10; 11:15 am]

BILLING CODE 4910–9X–P

DEPARTMENT OF HOMELAND SECURITY

Coast Guard

33 CFR Part 165

[Docket No. USCG–2010–0525]

RIN 1625–AA00

Safety Zone; Parade of Ships, Seattle SeaFair Fleet Week, Pier 66, Elliott Bay, WA

AGENCY: Coast Guard, DHS.

ACTION: Temporary final rule.

SUMMARY: The Coast Guard is establishing a temporary safety zone extending 100 yards from Pier 66, Elliott Bay, Washington to ensure adequate safety of the boating public during naval and aerial spectator events associated with the Parade of Ships for the annual Seattle SeaFair Fleet Week. This action is intended to restrict vessel traffic movement and entry into, transit through, mooring, or anchoring within these zones is prohibited unless authorized by the Captain of the Port, Puget Sound or Designated Representative.

DATES: This rule is effective from 8 a.m. until 8 p.m. on August 4, 2010.

ADDRESSES: Documents indicated in this preamble as being available in the docket, are part of docket USCG–2010–0525 and are available online by going to *http://www.regulations.gov,* inserting USCG–2010–0525 in the "Keyword" box, and then clicking "Search." This material is also available for inspection or copying at the Docket Management Facility (M–30), U.S. Department of Transportation, West Building Ground Floor, Room W12–140, 1200 New Jersey Avenue, SE., Washington, DC 20590, between 9 a.m. and 5 p.m., Monday through Friday, except Federal holidays.

FOR FURTHER INFORMATION CONTACT: If you have questions on this temporary rule, call or e-mail Ensign Ashley M. Wanzer, Sector Seattle Waterways Management, Coast Guard; telephone 206–217–6175, e-mail *SectorSeattleWWM@uscg.mil.* If you have questions on viewing the docket, call Renee V. Wright, Program Manager, Docket Operations, telephone 202–366–9826.

SUPPLEMENTARY INFORMATION:

Regulatory Information

The Coast Guard is issuing this temporary final rule without prior notice and opportunity to comment pursuant to authority under section 4(a) of the Administrative Procedure Act

(APA) (5 U.S.C. 553(b)). This provision authorizes an agency to issue a rule without prior notice and opportunity to comment when the agency for good cause finds that those procedures are "impracticable, unnecessary, or contrary to the public interest." Under 5 U.S.C. 553(b)(B), the Coast Guard finds that good cause exists for not publishing a notice of proposed rulemaking (NPRM) with respect to this rule because immediate action is necessary to ensure the safety of spectators and participants attending Fleet Week Maritime Festival. Delaying the effective date by first publishing an NPRM would be contrary to the safety zone's intended objective since immediate action is needed to protect persons and vessels against the hazards associated with event activities, such as the pass and review of ships and accompanying aerial demonstrations. Additionally, the zone should have negligible impact on vessel transits due to the fact that vessels will be limited from the area for only a limited time and vessels can still transit in the majority of Elliott Bay during the event. Accordingly, under 5 U.S.C. 553(b)(B), the Coast Guard finds that good cause exists for not publishing an NPRM.

Basis and Purpose

The Coast Guard is establishing a temporary safety zone extending 100 yards from Pier 66, Elliott Bay, WA to ensure adequate safety for the public during the Parade of Ships for the annual Seattle SeaFair Fleet Week. For the purposes of this rule the Parade of Ships includes both the pass and review of the ships near Pier 66 and the aerial demonstrations immediately following the pass and review. These events have historically resulted in vessel congestion near Pier 66, Elliott Bay, WA which compromises participant spectator safety. This safety zone is also necessary to ensure the safety of participant vessels through providing unobstructed vessel traffic lanes to ensure unobstructed access to emergency response craft in the event of an emergency. The Captain of the Port, Puget Sound may be assisted by other Federal and local agencies in the enforcement of this safety zone.

Discussion of Rule

This rule will prohibit the movement of all vessel operators within the indicated safety zone extending 100 yards from Pier 66, Elliott Bay, Washington during period of enforcement. The temporary safety zone is delineated by the points 47°36.719′ N 122°21.099′ W, 47°36.682′ N 122°21.149′ W, 47°36.514′ N 122°20.865′ W, and 47°36.552′ N 122°20.814′ W (NAD 83). This temporary safety zone is necessary to adequately provide protection to spectators and participants of the Parade of Ships. This safety zone will be enforced 30 minutes prior to and 30 minutes following scheduled annual parade of ships scheduled on August 4th, 2010.

The Coast Guard will provide notice to the public of enforcement of this zone through both the Local Notice to Mariners and marine information broadcast on the day of the event.

Regulatory Analyses

We developed this rule after considering numerous statutes and executive orders related to rulemaking. Below we summarize our analyses based on 13 of these statutes or executive orders.

Regulatory Planning and Review

This rule is not a significant regulatory action under section 3(f) of Executive Order 12866, Regulatory Planning and Review, and does not require an assessment of potential costs and benefits under section 6(a)(3) of that Order. The Office of Management and Budget has not reviewed it under that Order.

Although this regulation will restrict access to the area, the effect of the rule will not be significant because: (i) The safety zone will be in effect for a limited period of time, (ii) the Coast Guard will give advance notification via maritime advisories so mariners can adjust their plans accordingly; and (iii) vessels may be granted permission to transit the area by the Captain of the Port or a designated representative.

Small Entities

Under the Regulatory Flexibility Act (5 U.S.C. 601–612), we have considered whether this rule would have a significant economic impact on a substantial number of small entities. The term "small entities" comprises small businesses, not-for-profit organizations that are independently owned and operated and are not dominant in their fields, and governmental jurisdictions with populations of less than 50,000.

The Coast Guard certifies under 5 U.S.C. 605(b) that this rule will not have a significant economic impact on a substantial number of small entities.

This temporary rule will affect the following entities, some of which may be small entities: The owners or operators of vessels intending to transit a portion of the Puget Sound while this rule is enforced. This safety zone will not have significant economic impact on a substantial number of small entities for the following reasons: This temporary rule will be in effect for a short time, and if safe to do so, traffic will be allowed to pass through the zone with the permission of the Captain of the Port or Designated Representative.

If you think that your business, organization, or governmental jurisdiction qualifies as a small entity and that this rule would have a significant economic impact on it, please submit a comment (*see* **ADDRESSES**) explaining why you think it qualifies and how and to what degree this rule would economically affect it.

Assistance for Small Entities

Under section 213(a) of the Small Business Regulatory Enforcement Fairness Act of 1996 (Pub. L. 104–121), we offer to assist small entities in understanding the rule so that they can better evaluate its effects on them and participate in the rulemaking process.

Small businesses may send comments on the actions of Federal employees who enforce, or otherwise determine compliance with, Federal regulations to the Small Business and Agriculture Regulatory Enforcement Ombudsman and the Regional Small Business Regulatory Fairness Boards. The Ombudsman evaluates these actions annually and rates each agency's responsiveness to small business. If you wish to comment on actions by employees of the Coast Guard, call 1–888–REG–FAIR (1–888–734–3247). The Coast Guard will not retaliate against small entities that question or complain about this rule or any policy or action of the Coast Guard.

Collection of Information

This rule calls for no new collection of information under the Paperwork Reduction Act of 1995 (44 U.S.C. 3501–3520).

Federalism

A rule has implications for federalism under Executive Order 13132, Federalism, if it has a substantial direct effect on State or local governments and would either preempt State law or impose a substantial direct cost of compliance on them. We have analyzed this rule under that Order and have determined that it does not have implications for federalism.

Unfunded Mandates Reform Act

The Unfunded Mandates Reform Act of 1995 (2 U.S.C. 1531–1538) requires Federal agencies to assess the effects of their discretionary regulatory actions. In particular, the Act addresses actions that may result in the expenditure by a

State, local, or tribal government, in the aggregate, or by the private sector of $100,000,000 (adjusted for inflation) or more in any one year. Though this rule will not result in such an expenditure, we do discuss the effects of this rule elsewhere in this preamble.

Taking of Private Property

This rule will not cause a taking of private property or otherwise have taking implications under Executive Order 12630, Governmental Actions and Interference with Constitutionally Protected Property Rights.

Civil Justice Reform

This rule meets applicable standards in sections 3(a) and 3(b)(2) of Executive Order 12988, Civil Justice Reform, to minimize litigation, eliminate ambiguity, and reduce burden.

Protection of Children

We have analyzed this rule under Executive Order 13045, Protection of Children from Environmental Health Risks and Safety Risks. This rule is not an economically significant rule and does not create an environmental risk to health or risk to safety that may disproportionately affect children.

Indian Tribal Governments

This rule does not have tribal implications under Executive Order 13175, Consultation and Coordination with Indian Tribal Governments, because it does not have a substantial direct effect on one or more Indian tribes, on the relationship between the Federal Government and Indian tribes, or on the distribution of power and responsibilities between the Federal Government and Indian tribes.

Energy Effects

We have analyzed this rule under Executive Order 13211, Actions Concerning Regulations That Significantly Affect Energy Supply, Distribution, or Use. We have determined that it is not a "significant energy action" under that order because it is not a "significant regulatory action" under Executive Order 12866 and is not likely to have a significant adverse effect on the supply, distribution, or use of energy. The Administrator of the Office of Information and Regulatory Affairs has not designated it as a significant energy action. Therefore, it does not require a Statement of Energy Effects under Executive Order 13211.

Technical Standards

The National Technology Transfer and Advancement Act (NTTAA) (15 U.S.C. 272 note) directs agencies to use voluntary consensus standards in their regulatory activities unless the agency provides Congress, through the Office of Management and Budget, with an explanation of why using these standards would be inconsistent with applicable law or otherwise impractical. Voluntary consensus standards are technical standards (*e.g.,* specifications of materials, performance, design, or operation; test methods; sampling procedures; and related management systems practices) that are developed or adopted by voluntary consensus standards bodies.

This rule does not use technical standards. Therefore, we did not consider the use of voluntary consensus standards.

Environment

We have analyzed this rule under Department of Homeland Security Management Directive 023–01 and Commandant Instruction M16475.lD, which guide the Coast Guard in complying with the National Environmental Policy Act of 1969 (NEPA) (42 U.S.C. 4321–4370f), and have concluded this action is one of a category of actions that do not individually or cumulatively have a significant effect on the human environment. This rule is categorically excluded, under figure 2–1, paragraph (34)(g), of the Instruction. This rule involves the establishment of a temporary safety zone. An environmental analysis checklist and a categorical exclusion determination are available in the docket where indicated under **ADDRESSES**.

List of Subjects in 33 CFR Part 165

Harbors, Marine safety, Navigation (water), Reporting and record keeping requirements, Security measures, Waterways.

■ For the reasons discussed in the preamble, the Coast Guard amends 33 CFR part 165, as follows:

PART 165—REGULATED NAVIGATION AREAS AND LIMITED ACCESS AREAS

■ 1. The authority citation for Part 165 continues to read as follows:

Authority: 33 U.S.C. 1226, 1231; 46 U.S.C. Chapter 701, 3306, 3703; 50 U.S.C. 191, 195; 33 CFR 1.05–1, 6.04–1, 6.04–6, 160.5; Pub. L. 107–295, 116 Stat. 2064; Department of Homeland Security Delegation No. 0170.1

■ 2. Add § 165.T13–150 to read as follows:

§ 165.T13–150 Safety Zone; Fleet Week Maritime Festival, Pier 66, Elliott Bay, Seattle, WA

(a) *Location.* The following area is a safety zone: All waters extending 100 yards from Pier 66, Elliott Bay, WA within a box encompassed by the points 47°36.719′ N 122°21.099′ W, 47°36.682′ N 122°21.149′ W, 47°36.514′ N 122°20.865′ W, and 47°36.552′ N 122°20.814′ W (NAD 83).

(b) *Regulations.* In accordance with the general regulations in § 165.23 of this part, no vessel operator may enter or remain in the safety zone without the permission of the Captain of the Port or Designated Representative, thirty minutes prior to the beginning of the parade of ships and thirty minutes following the conclusion of the parade of ships on August 4th, 2010. The Coast Guard will provide notice to the public of enforcement of this zone through both the Local Notice to Mariners and marine information broadcast on the day of the event.

For the purposes of this rule the Parade of Ships includes both the pass and review of the ships near Pier 66 and the aerial demonstrations immediately following the pass and review. The Captain of the Port may be assisted by other federal, state, or local agencies with the enforcement of the safety zone.

(c) *Authorization.* All vessel operators who desire to enter the safety zone must obtain permission from the Captain of the Port or Designated Representative by contacting the on scene patrol craft on VHF Ch 16 or the Coast Guard Sector Seattle Joint Harbor Operations Center (JHOC) via telephone at (206) 217–6001. Vessel operators granted permission to enter the zone will be escorted by the on-scene Coast Guard patrol craft until they are outside of the safety zone.

(d) *Effective Period.* This rule is effective from 8 a.m. until 8 p.m. on August 4, 2010, unless canceled sooner by the Captain of the Port.

Dated: June 5, 2010.

S.W. Bornemann,

Captain, U.S. Coast Guard, Captain of the Port, Puget Sound.

[FR Doc. 2010–14849 Filed 6–18–10; 8:45 am]

BILLING CODE 9110–04–P

DEPARTMENT OF HOMELAND SECURITY

Coast Guard

33 CFR Part 165

[Docket No. USCG–2010–0542]

RIN 1625–AA00

Safety Zones: Neptune Deep Water Port, Atlantic Ocean, Boston, MA

AGENCY: Coast Guard, DHS.

ACTION: Temporary final rule.

SUMMARY: The Coast Guard is establishing two temporary safety zones extending 500 meters in all directions from each of the two submerged turret loading (STL) buoys and accompanying systems that are part of GDF Suez Energy's Neptune Deepwater Port located in the Atlantic Ocean off of Boston, Massachusetts. The purpose of these temporary safety zones is to protect vessels and mariners from the potential safety hazards associated with construction of the deepwater port facilities and the large sub-surface turret buoys, and to protect the deepwater port infrastructure. All vessels, with the exception of deepwater port support vessels, are prohibited from entering into, remaining or moving within either of the safety zones.

DATES: This rule is effective in the CFR on June 21, 2010. This rule is effective with actual notice for purposes of enforcement from 12:01 a.m. June 12, 2010 until 11:59 p.m. December 31, 2010.

ADDRESSES: Comments and material received from the public, as well as documents mentioned in this preamble as being available in the docket, are part of docket USCG–2010–0542 and are available online by going to *http://www.regulations.gov,* inserting USCG–2010–0542 in the "Keyword" box, and then clicking "Search." This material is also available for inspection or copying at the Docket Management Facility (M–30), U.S. Department of Transportation, West Building Ground Floor, Room W12–140, 1200 New Jersey Avenue, SE., Washington, DC 20590, between 9 a.m. and 5 p.m., Monday through Friday, except Federal holidays.

FOR FURTHER INFORMATION CONTACT: If you have questions on this temporary rule, call or e-mail Lieutenant Commander Pamela Garcia, Prevention Department, Coast Guard Sector Boston; telephone 617–223–3028, e-mail *Pamela.P.Garcia@uscg.mil.* If you have questions on viewing the docket, call Renee V. Wright, Program Manager, Docket Operations, telephone 202–366–9826.

SUPPLEMENTARY INFORMATION:

Regulatory Information

The Coast Guard is issuing this temporary final rule without prior notice and opportunity to comment pursuant to authority under section 4(a) of the Administrative Procedure Act (APA) (5 U.S.C. 553(b)). This provision authorizes an agency to issue a rule without prior notice and opportunity to comment when the agency for good cause finds that those procedures are "impracticable, unnecessary, or contrary to the public interest." Under 5 U.S.C. 553(b)(B), the Coast Guard finds that good cause exists for not publishing a notice of proposed rulemaking (NPRM) with respect to this rule. The deepwater port facilities discussed elsewhere in this rule are in the final stages of completion and present a potential safety hazard to vessels, especially fishing vessels, operating in the vicinity of submerged structures associated with the deepwater port facility. A more robust regulatory scheme, (NPRM; USCG–2009–0589), to ensure the safety and security of vessels operating in the area, was developed via separate rulemaking, and was available for review and comment at the Web site *http://www.regulations.gov.* These safety zones are needed pending implementation of a final regulatory action, which will be proposed in a separate rulemaking docket titled: Neptune Deep Water Port, Atlantic Ocean, Boston, MA; Final Rule (USCG–2009–0589), to protect vessels from the hazard posed by the presence of the currently uncharted, submerged deepwater infrastructure.

The current construction schedule that includes installation of underwater structures does not allow time to conduct a notice and comment period for this rule therefore publication of an NPRM is impractical. Further, delaying the effective date pending completion of notice and comment rulemaking is contrary to the public interest to the extent it would expose vessels currently operating in the area to the known, but otherwise uncharted submerged hazards.

For the reasons outlined above, the Coast Guard finds under 5 U.S.C. 553(d)(3) that good cause exists for making this rule effective less than 30 days after publication in the **Federal Register**. Further, a delay or cancellation of this portion of the construction to facilitate 30 days publication before the rule is made effective is contrary to the public's interest in the timely completion of this project.

Basis and Purpose

On March 23, 2007, the Maritime Administration (MARAD), in accordance with the Deepwater Port Act of 1974, as amended, issued a license to Suez Energy to own, construct, and operate a natural gas deepwater port, "Neptune". Neptune Deepwater Port (NEPTUNE) is located in the Atlantic Ocean, approximately eight nautical miles South-southeast of Gloucester, Massachusetts, in Federal waters. The two STL buoys, which are circled at approximately 500 meters on the surface of the water by several small white buoys labeled LNG with red flags and radar-reflected buoys known as Hi Flyers are located in the following approximate positions: STL Buoy A: Latitude 42°29′12.3″ N, Longitude 070°36′29.7″ W; and, STL Buoy B: Latitude 42°27′20.5″ N, Longitude 070°36′07.3″ W. The Neptune Deepwater Port can accommodate the mooring, connecting, and offloading of two liquefied natural gas carriers (LNGCs) at one time. The Neptune Deepwater Port operator plans to offload LNGCs by regasifying the liquefied natural gas (LNG) on board the vessels. The regasified natural gas is then transferred through two STL buoys, via a flexible riser leading to a seabed pipeline that ties into the existing Algonquin Gas Transmission Pipeline for transfer to shore. GDF Suez recently completed installation of the STL buoys and associated sub-surface infrastructure, which includes, among other things, a significant sub-surface sea anchor and mooring system. The temporary zones created by this rule ensures that there is no gap in safety regulations so as to ensure the safety of persons and vessels operating around the submerged deepwater port infrastructure while public comments on the NPRM creating permanent regulations around the Neptune Deepwater Port facility are analyzed and final regulatory action is completed.

Discussion of Rule

The Coast Guard is establishing two temporary safety zones of 500 meters in radius around the two Neptune Deepwater Port STL buoys as described above to protect vessels from these submerged hazards. All vessels, other than Liquefied Natural Gas carriers and associated support vessels are prohibited from entering into, remaining or moving within the safety and security zones.

Regulatory Analyses

We developed this rule after considering numerous statutes and executive orders related to rulemaking. Below we summarize our analyses based on 13 of these statutes or executive orders.

Regulatory Planning and Review

This rule is not a significant regulatory action under section 3(f) of Executive Order 12866, Regulatory Planning and Review, and does not require an assessment of potential costs and benefits under section 6(a)(3) of that Order. The Office of Management and Budget has not reviewed it under that Order.

This regulation is not significant as it establishes a safety zone around the buoys and under water infrastructure of the Neptune Deep Water Port. Extensive outreach has been conducted by the company, GDF Suez Energy, with the local boating and fishing community so as to minimize impacts. In addition, the company has stationed a vessel at the location of the Neptune project to notify vessels potentially conducting under water operations of the local dangers.

Small Entities

Under the Regulatory Flexibility Act (5 U.S.C. 601–612), we have considered whether this rule would have a significant economic impact on a substantial number of small entities. The term "small entities" comprises small businesses, not-for-profit organizations that are independently owned and operated and are not dominant in their fields, and governmental jurisdictions with populations of less than 50,000.

The Coast Guard certifies under 5 U.S.C. 605(b) that this rule will not have a significant economic impact on a substantial number of small entities.

This rule will affect the following entities, some of which may be small entities: The owners or operators of fishing and recreational vessels intending to transit or anchor in a portion of the Atlantic Ocean, Massachusetts Bay area covered by this rule. These safety zones will not have a significant economic impact on a substantial number of small entities for the following reasons. These two safety zones only extend for 500 meters from each of the STL buoys allowing navigation in all other areas of Massachusetts Bay and public notification of the safety and the inherent dangers of the STL buoys and underwater equipment will continue to be made by the Coast Guard as well as Neptune personnel.

Assistance for Small Entities

Under section 213(a) of the Small Business Regulatory Enforcement Fairness Act of 1996 (Pub. L. 104–121), we offer to assist small entities in understanding the rule so that they can better evaluate its effects on them and participate in the rulemaking process.

Small businesses may send comments on the actions of Federal employees who enforce, or otherwise determine compliance with, Federal regulations to the Small Business and Agriculture Regulatory Enforcement Ombudsman and the Regional Small Business Regulatory Fairness Boards. The Ombudsman evaluates these actions annually and rates each agency's responsiveness to small business. If you wish to comment on actions by employees of the Coast Guard, call 1–888–REG–FAIR (1–888–734–3247). The Coast Guard will not retaliate against small entities that question or complain about this rule or any policy or action of the Coast Guard.

Collection of Information

This rule calls for no new collection of information under the Paperwork Reduction Act of 1995 (44 U.S.C. 3501–3520).

Federalism

A rule has implications for federalism under Executive Order 13132, Federalism, if it has a substantial direct effect on State or local governments and would either preempt State law or impose a substantial direct cost of compliance on them. We have analyzed this rule under that Order and have determined that it does not have implications for federalism.

Unfunded Mandates Reform Act

The Unfunded Mandates Reform Act of 1995 (2 U.S.C. 1531–1538) requires Federal agencies to assess the effects of their discretionary regulatory actions. In particular, the Act addresses actions that may result in the expenditure by a State, local, or Tribal government, in the aggregate, or by the private sector of $100,000,000 (adjusted for inflation) or more in any one year. Though this rule will not result in such expenditure, we do discuss the effects of this rule elsewhere in this preamble.

Taking of Private Property

This rule will not cause a taking of private property or otherwise have taking implications under Executive Order 12630, Governmental Actions and Interference with Constitutionally Protected Property Rights.

Civil Justice Reform

This rule meets applicable standards in sections 3(a) and 3(b)(2) of Executive Order 12988, Civil Justice Reform, to minimize litigation, eliminate ambiguity, and reduce burden.

Protection of Children

We have analyzed this rule under Executive Order 13045, Protection of Children from Environmental Health Risks and Safety Risks. This rule is not an economically significant rule and does not create an environmental risk to health or risk to safety that may disproportionately affect children.

Indian Tribal Governments

This rule does not have Tribal implications under Executive Order 13175, Consultation and Coordination with Indian Tribal Governments, because it does not have a substantial direct effect on one or more Indian Tribes, on the relationship between the Federal Government and Indian Tribes, or on the distribution of power and responsibilities between the Federal Government and Indian Tribes.

Energy Effects

We have analyzed this rule under Executive Order 13211, Actions Concerning Regulations That Significantly Affect Energy Supply, Distribution, or Use. We have determined that it is not a "significant energy action" under that order because it is not a "significant regulatory action" under Executive Order 12866 and is not likely to have a significant adverse effect on the supply, distribution, or use of energy. The Administrator of the Office of Information and Regulatory Affairs has not designated it as a significant energy action. Therefore, it does not require a Statement of Energy Effects under Executive Order 13211.

Technical Standards

The National Technology Transfer and Advancement Act (NTTAA) (15 U.S.C. 272 note) directs agencies to use voluntary consensus standards in their regulatory activities unless the agency provides Congress, through the Office of Management and Budget, with an explanation of why using these standards would be inconsistent with applicable law or otherwise impractical. Voluntary consensus standards are technical standards (*e.g.,* specifications of materials, performance, design, or operation; test methods; sampling procedures; and related management systems practices) that are developed or adopted by voluntary consensus standards bodies.

This rule does not use technical standards. Therefore, we did not consider the use of voluntary consensus standards.

Environment

We have analyzed this rule under Department of Homeland Security Management Directive 023–01 and Commandant Instruction M16475.lD, which guide the Coast Guard in complying with the National Environmental Policy Act of 1969 (NEPA)(42 U.S.C. 4321–4370f), and have concluded this action is one of a category of actions which do not individually or cumulatively have a significant effect on the human environment. This rule is categorically excluded, under figure 2–1, paragraph (34)(g), of the Instruction. This rule

involves the creation of two safety zones around a submerged buoy and its associated infrastructure. An environmental analysis checklist and a categorical exclusion determination will be available in the docket where indicated under **ADDRESSES**.

List of Subjects in 33 CFR Part 165

Harbors, Marine safety, Navigation (water), Reporting and recordkeeping requirements, Security measures, Waterways.

■ For the reasons discussed in the preamble, the Coast Guard amends 33 CFR part 165 as follows:

PART 165—REGULATED NAVIGATION AREAS AND LIMITED ACCESS AREAS

■ 1. The authority citation for part 165 continues to read as follows:

Authority: 33 U.S.C. 1226, 1231; 46 U.S.C. Chapter 701, 3306, 3703; 50 U.S.C. 191, 195; 33 CFR 1.05–1, 6.04–1, 6.04–6, and 160.5; Pub. L. 107–295, 116 Stat. 2064; Department of Homeland Security Delegation No. 0170.1.

■ 2. Add § 165.T01–0542 to read as follows:

§ 165.T01–0542 Safety Zones: Neptune Deepwater Port, Atlantic Ocean, Boston, MA.

(a) *Location.* The following areas are safety zones: All navigable waters of the United States within a 500-meter radius of each of the two STL buoys of the Neptune Deepwater Port, marked on the surface of the water by several small, white buoys labeled LNG with red flags and radar-reflected buoys known as "Hi Flyers" located at approximate positions 42°29′12.3″ N, 070°36′29.7″ W and 42° 27′20.5″ N, 070°36′07.3″ W. [NAD83].

(b) *Notification.* Coast Guard Sector Boston will cause notice of the enforcement of this temporary safety zone to be made by all appropriate means to affect the widest publicity among the effected segments of the public, including publication in the Local Notice to Mariners and Broadcast Notice to Mariners.

(c) *Enforcement Period.* This safety zone will be enforced at 12:01 a.m. Saturday June 12, 2010 until 11:59 p.m. December 31, 2010.

(d) *Definitions.* As used in this section:

Authorized representative means a Coast Guard commissioned, warrant, or petty officer or a Federal, State, or local law enforcement officer designated by or assisting the Captain of the Port Boston (COTP).

Deepwater port means any facility or structure meeting the definition of deepwater port in 33 CFR 148.5.

Support vessel means any vessel meeting the definition of support vessel in 33 CFR 148.5.

(e) *Regulations.*

(1) The general regulations contained in 33 CFR 165.23 apply.

(2) In accordance with the general regulations entry into or movement within these safety zones is prohibited unless authorized by the Captain of the Port Boston. Liquefied Natural Gas Carrier vessels and related Support Vessels calling on the Neptune Deepwater Port are authorized to enter and move within the safety zones of this section in the normal course of their operations.

(3) All persons and vessels shall comply with the Coast Guard Captain of the Port or authorized representative.

(4) Upon being hailed by an authorized representative by siren, radio, flashing light or other means, the operator of the vessel shall proceed as directed.

(5) Persons and vessels may contact the Coast Guard to request permission to enter the zone on VHF–FM Channel 16 or via phone at 617–223–5761.

Dated: June 9, 2010.

John N. Healey,

Captain, U.S. Coast Guard, Captain of the Port Boston.

[FR Doc. 2010–14851 Filed 6–18–10; 8:45 am]

BILLING CODE 9110–04–P

DEPARTMENT OF HOMELAND SECURITY

Coast Guard

33 CFR Part 165

[Docket No. USCG–2010–0235]

RIN 1625–AA00

Safety Zone; Michigan City Super Boat Grand Prix, Lake Michigan, Michigan City, IN

AGENCY: Coast Guard, DHS.

ACTION: Temporary final rule.

SUMMARY: The Coast Guard is establishing a temporary safety zone on Lake Michigan near Michigan City, Indiana. This zone is intended to restrict vessels from a portion of Lake Michigan due to a high speed boat racing event. This temporary safety zone is necessary to protect the surrounding public and their vessels from the hazards associated with a high speed boat racing event.

DATES: This regulation is effective from 9 a.m. until 4 p.m. on August 8, 2010.

ADDRESSES: Comments and material received from the public, as well as documents mentioned in this preamble as being available in the docket, are part of docket USCG–2010–0235 and are available online by going to *http://www.regulations.gov,* inserting USCG–2010–0235 in the "Keyword" box, and then clicking "Search." This material is also available for inspection or copying at the Docket Management Facility (M–30), U.S. Department of Transportation, West Building Ground Floor, Room W12–140, 1200 New Jersey Avenue, SE., Washington, DC 20590, between 9 a.m. and 5 p.m., Monday through Friday, except Federal holidays.

FOR FURTHER INFORMATION CONTACT: If you have questions on this temporary rule, contact or e-mail Petty Officer Adam Kraft, U.S. Coast Guard Sector Lake Michigan, at (414) 747–7154 or *Adam.D.Kraft@uscg.mil.* If you have questions on viewing the docket, call Renee V. Wright, Program Manager, Docket Operations, telephone (202) 366–9826.

SUPPLEMENTARY INFORMATION:

Regulatory Information

On April 28, 2010, we published a notice of proposed rulemaking (NPRM) entitled Safety Zone; Michigan City Super Boat Grand Prix, Lake Michigan, Michigan City, IN in the **Federal Register** (75 FR 22333). We received 0 comments on the proposed rule. No public meeting was requested and none was held.

Basis and Purpose

This temporary safety zone is necessary to protect vessels from the hazards associated with the Michigan City Super Boat Grand Prix. The Captain of the Port, Sector Lake Michigan, has determined that the Michigan City Super Boat Grand Prix presents a significant risk to public safety and property. The likely combination of congested waterways and high speed boat racing presents a significant risk of serious injuries or fatalities.

Discussion of Comments and Changes

No comments were received concerning this rule. No substantive changes have been made to the rule as proposed.

Regulatory Analyses

We developed this rule after considering numerous statutes and executive orders related to rulemaking. Below we summarize our analyses based on 13 of these statutes or executive orders.

Regulatory Planning and Review

This rule is not a significant regulatory action under section 3(f) of Executive Order 12866, Regulatory

Planning and Review, and does not require an assessment of potential costs and benefits under section 6(a)(3) of that Order. The Office of Management and Budget has not reviewed it under that Order.

Although this temporary rule restricts access to the safety zone, the effect of this rule will not be significant because of the the minimal time that vessels will be restricted from the zone and the zone is an area where the Coast Guard expects insignificant adverse impact to mariners from the zones' activation.

Small Entities

Under the Regulatory Flexibility Act (5 U.S.C. 601–612), we have considered whether this rule would have a significant economic impact on a substantial number of small entities. The term "small entities" comprises small businesses, not-for-profit organizations that are independently owned and operated and are not dominant in their fields, and governmental jurisdictions with populations of less than 50,000.

The Coast Guard certifies under 5 U.S.C. 605(b) that this rule will not have a significant economic impact on a substantial number of small entities.

This rule will affect the following entities, some of which might be small entities: The owners or operators of vessels intending to transit or anchor in a portion of Lake Michigan, Michigan City, Indiana between 9 a.m. and 4 p.m. on August 8, 2010.

This safety zone will not have a significant economic impact on a substantial number of small entities for the following reasons: This rule will only be enforced while unsafe conditions exist. In the event that this temporary safety zone affects shipping, commercial vessels may request permission from the Captain of The Port, Sector Lake Michigan, to transit through the safety zone. The Coast Guard will give notice to the public via a Broadcast to Mariners that the regulation is in effect.

Assistance for Small Entities

Under section 213(a) of the Small Business Regulatory Enforcement Fairness Act of 1996 (Pub. L. 104–121), in the NPRM we offered to assist small entities in understanding the rule so that they could better evaluate its effects on them and participate in the rulemaking process.

Small businesses may send comments on the actions of Federal employees who enforce, or otherwise determine compliance with, Federal regulations to the Small Business and Agriculture Regulatory Enforcement Ombudsman and the Regional Small Business Regulatory Fairness Boards. The Ombudsman evaluates these actions annually and rates each agency's responsiveness to small business. If you wish to comment on actions by employees of the Coast Guard, call 1–888–REG–FAIR (1–888–734–3247). The Coast Guard will not retaliate against small entities that question or complain about this rule or any policy or action of the Coast Guard.

Collection of Information

This rule calls for no new collection of information under the Paperwork Reduction Act of 1995 (44 U.S.C. 3501–3520).

Federalism

A rule has implications for federalism under Executive Order 13132, Federalism, if it has a substantial direct effect on State or local governments and would either preempt State law or impose a substantial direct cost of compliance on them. We have analyzed this rule under that Order and have determined that it does not have implications for federalism. No comments were received concerning this rule. No substantive changes have been made to the rule as proposed.

Unfunded Mandates Reform Act

The Unfunded Mandates Reform Act of 1995 (2 U.S.C. 1531–1538) requires Federal agencies to assess the effects of their discretionary regulatory actions. In particular, the Act addresses actions that may result in the expenditure by a State, local, or tribal government, in the aggregate, or by the private sector of $100,000,000 (adjusted for inflation) or more in any one year. Though this rule will not result in such an expenditure, we do discuss the effects of this rule elsewhere in this preamble.

Taking of Private Property

This rule will not cause a taking of private property or otherwise have taking implications under Executive Order 12630, Governmental Actions and Interference with Constitutionally Protected Property Rights. No comments were received concerning this rule. No substantive changes have been made to the rule as proposed.

Civil Justice Reform

This rule meets applicable standards in sections 3(a) and 3(b)(2) of Executive Order 12988, Civil Justice Reform, to minimize litigation, eliminate ambiguity, and reduce burden. No comments were received concerning this rule. No substantive changes have been made to the rule as proposed.

Protection of Children

We have analyzed this rule under Executive Order 13045, Protection of Children from Environmental Health Risks and Safety Risks. This rule is not an economically significant rule and does not create an environmental risk to health or risk to safety that may disproportionately affect children. No comments were received concerning this rule. No substantive changes have been made to the rule as proposed.

Indian Tribal Governments

This rule does not have tribal implications under Executive Order 13175, Consultation and Coordination with Indian Tribal Governments, because it does not have a substantial direct effect on one or more Indian tribes, on the relationship between the Federal Government and Indian tribes, or on the distribution of power and responsibilities between the Federal Government and Indian tribes. No comments were received concerning this rule. No substantive changes have been made to the rule as proposed.

Energy Effects

We have analyzed this rule under Executive Order 13211, Actions Concerning Regulations That Significantly Affect Energy Supply, Distribution, or Use. We have determined that it is not a "significant energy action" under that order because it is not a "significant regulatory action" under Executive Order 12866 and is not likely to have a significant adverse effect on the supply, distribution, or use of energy. The Administrator of the Office of Information and Regulatory Affairs has not designated it as a significant energy action. Therefore, it does not require a Statement of Energy Effects under Executive Order 13211. No comments were received concerning this rule. No substantive changes have been made to the rule as proposed.

Technical Standards

The National Technology Transfer and Advancement Act (NTTAA) (15 U.S.C. 272 note) directs agencies to use voluntary consensus standards in their regulatory activities unless the agency provides Congress, through the Office of Management and Budget, with an explanation of why using these standards would be inconsistent with applicable law or otherwise impractical. Voluntary consensus standards are technical standards (*e.g.,* specifications of materials, performance, design, or operation; test methods; sampling procedures; and related management systems practices) that are developed or

adopted by voluntary consensus standards bodies.

This rule does not use technical standards. Therefore, we did not consider the use of voluntary consensus standards. No comments were received concerning this rule. No substantive changes have been made to the rule as proposed.

Environment

We have analyzed this rule under Department of Homeland Security Management Directive 023–01 and Commandant Instruction M16475.lD, which guide the Coast Guard in complying with the National Environmental Policy Act of 1969 (NEPA) (42 U.S.C. 4321–4370f), and have concluded this action is one of a category of actions that do not individually or cumulatively have a significant effect on the human environment. This rule is categorically excluded, under figure 2–1, paragraph (34)(g), of the Instruction. This rule involves the establishment of a safety zone therefore paragraph (34)(g) of the Instruction applies.

An environmental analysis checklist and a categorical exclusion determination are available in the docket where indicated under **ADDRESSES**.

List of Subjects in 33 CFR Part 165

Harbors, Marine safety, Navigation (water), Reporting and recordkeeping requirements, Security measures, Waterways.

■ For the reasons discussed in the preamble, the Coast Guard proposes to amend 33 CFR Part 165 as follows:

PART 165—REGULATED NAVIGATION AREAS AND LIMITED ACCESS AREAS

■ 1. The authority citation for Part 165 continues to read as follows:

Authority: 33 U.S.C. 1226, 1231; 46 U.S.C. Chapter 701, 3306, 3703; 50 U.S.C. 191, 195; 33 CFR 1.05–1, 6.04–1, 6.04–6, and 160.5; Pub. L. 107–295, 116 Stat. 2064; Department of Homeland Security Delegation No. 0170.1.

■ 2. Add § 165.T09–0235 to read as follows:

§ 165.T09–0235 Safety Zone; Michigan City Super Boat Grand Prix, Lake Michigan, Michigan City, IN

(a) *Location.* The following area is a temporary safety zone: offshore of Long Beach in Michigan City, Indiana, a 4500 yard by 600 yard area encompassing specified U.S. waters of Lake Michigan bound by a line drawn from 41°43′42″ N, 086°54′18″ W; then north to 41°43′49″ N, 086°54′31″ W; then east to 41°44′48″ N, 086°51′45″ W; then south to 41°44′42″ N, 086°51′31″ W; then west returning to the point of origin (NAD 83).

(b) *Enforcement period.* This regulation will be enforced between 9 a.m. and 4 p.m. on August 8, 2010. The Captain of the Port, Sector Lake Michigan, or his or her on-scene representative may terminate this operation at anytime.

(c) *Regulations.* (1) In accordance with the general regulations in section 165.23 of this part, entry into, transiting, or anchoring within this safety zone is prohibited unless authorized by the Captain of the Port, Sector Lake Michigan, or his or her on-scene representative.

(2) This safety zone is closed to all vessel traffic, except as may be permitted by the Captain of the Port, Sector Lake Michigan, or his or her on-scene representative.

(3) The "on-scene representative" of the Captain of the Port, Sector Lake Michigan, is any Coast Guard commissioned, warrant or petty officer who has been designated by the Captain of the Port, Sector Lake Michigan, to act on his or her behalf. The on-scene representative of the Captain of the Port, Sector Lake Michigan, will be aboard either a Coast Guard or Coast Guard Auxiliary vessel.

(4) Vessel operators desiring to enter or operate within the safety zone shall contact the Captain of the Port, Sector Lake Michigan, or his or her on-scene representative to obtain permission to do so. The Captain of the Port, Sector Lake Michigan, or his or her on-scene representative may be contacted via VHF Channel 16. Vessel operators given permission to enter or operate in the safety zone must comply with all directions given to them by the Captain of the Port, Sector Lake Michigan, or his or her on-scene representative.

Dated: June 3, 2010.

L. Barndt,

Captain, U.S. Coast Guard, Captain of the Port, Sector Lake Michigan.

[FR Doc. 2010–14850 Filed 6–18–10; 8:45 am]

BILLING CODE 9110–04–P

DEPARTMENT OF HOMELAND SECURITY

Coast Guard

33 CFR Part 165

[Docket No. USCG–2010–0478]

RIN 1625–AA00

Safety Zone; Fireworks for the Virginia Lake Festival, Buggs Island Lake, Clarksville, VA

AGENCY: Coast Guard, DHS.

ACTION: Temporary final rule.

SUMMARY: The Coast Guard is establishing a 700-foot radius safety zone on the navigable waters of Buggs Island Lake in Clarksville, VA in support of the Fireworks for the Virginia Lake Festival event. This action is intended to restrict vessel traffic movement to protect mariners and spectators from the hazards associated with aerial fireworks displays.

DATES: This rule is effective from 9:30 p.m. to 10 p.m. on July 17, 2010.

ADDRESSES: Documents indicated in this preamble as being available in the docket are part of docket USCG–2010–0478 and are available online by going to *http://www.regulations.gov,* inserting USCG–2010–0478 in the "Keyword" box, and then clicking "Search." They are also available for inspection or copying at the Docket Management Facility (M–30), U.S. Department of Transportation, West Building Ground Floor, Room W12–140, 1200 New Jersey Avenue, SE., Washington, DC 20590, between 9 a.m. and 5 p.m., Monday through Friday, except Federal holidays.

FOR FURTHER INFORMATION CONTACT: If you have questions on this temporary rule, call or e-mail LT Tiffany Duffy, Waterways Management Division, Coast Guard; telephone 757–668–5580, e-mail *Tiffany.A.Duffy@uscg.mil.* If you have questions on viewing the docket, call Renee V. Wright, Program Manager, Docket Operations, telephone 202–366–9826.

SUPPLEMENTARY INFORMATION:

Regulatory Information

The Coast Guard is issuing this temporary final rule without prior notice and opportunity to comment pursuant to authority under section 4(a) of the Administrative Procedure Act (APA) (5 U.S.C. 553(b)). This provision authorizes an agency to issue a rule without prior notice and opportunity to comment when the agency for good cause finds that those procedures are "impracticable, unnecessary, or contrary to the public interest." Under 5 U.S.C.

553(b)(B), the Coast Guard finds that good cause exists for not publishing a notice of proposed rulemaking (NPRM) with respect to this rule because any delay encountered in this regulation's effective date by publishing a NPRM would be contrary to public interest since immediate action is needed to provide for the safety of life and property on navigable waters. This safety zone should have a minimal impact on transiting vessels because vessels will be limited from the area for only one-half hour and vessels can still transit in the majority of Buggs Island Lake during the event.

Under 5 U.S.C. 553(d)(3), the Coast Guard finds that good cause exists for making this rule effective less than 30 days after publication in the **Federal Register**. Due to the need for immediate action, the restriction of vessel traffic is necessary to protect life, property and the environment during the fireworks event, therefore, a 30-day notice is impracticable. Delaying the effective date would be contrary to the safety zone's intended objectives of protecting persons and vessels involved in the event, and enhancing public and maritime safety.

Basis and Purpose

On July 17, 2010, the Clarksville Lake Country Chamber of Commerce will sponsor a fireworks display on the causeway of the Highway 58 Business Bridge over the navigable waters of Buggs Island Lake centered on position 36°38′02″ N/078°32′32″ W (NAD 1983). Due to the need to protect mariners and spectators from the hazards associated with the fireworks display, such as the accidental discharge of fireworks, dangerous projectiles, and falling hot embers or other debris, vessel traffic will be temporarily restricted within 700 feet of the fireworks launch site.

Discussion of Rule

The Coast Guard is establishing a safety zone on the navigable waters of Buggs Island Lake within the area bounded by a 700-foot radius circle centered on position 36°38′02″ N/078°32′32″ W (NAD 1983). This safety zone will be established in the vicinity of Clarksville, VA from 9:30 p.m. to 10 p.m. on July 17, 2010. In the interest of public safety, general navigation within the safety zone will be restricted during the specified date and times. Except for participants and vessels authorized by the Coast Guard Captain of the Port or his representative, no person or vessel may enter or remain in the regulated area.

Regulatory Analyses

We developed this rule after considering numerous statutes and executive orders related to rulemaking. Below we summarize our analyses based on 13 of these statutes or executive orders.

Regulatory Planning and Review

This rule is not a significant regulatory action under section 3(f) of Executive Order 12866, Regulatory Planning and Review, and does not require an assessment of potential costs and benefits under section 6(a)(3) of that Order. The Office of Management and Budget has not reviewed it under that Order. Although this regulation restricts access to the safety zone, the effect of this rule will not be significant because: (i) The safety zone will be in effect for a limited duration; (ii) the zone is of limited size; and (iii) the Coast Guard will make notifications via maritime advisories so mariners can adjust their plans accordingly.

Small Entities

Under the Regulatory Flexibility Act (5 U.S.C. 601–612), we have considered whether this rule would have a significant economic impact on a substantial number of small entities. The term "small entities" comprises small businesses, not-for-profit organizations that are independently owned and operated and are not dominant in their fields, and governmental jurisdictions with populations of less than 50,000.

The Coast Guard certifies under 5 U.S.C. 605(b) that this rule will not have a significant economic impact on a substantial number of small entities.

This rule will affect the following entities, some of which may be small entities: The owners or operators of vessels intending to transit the specified portion of Buggs Island Lake from 9:30 p.m. to 10 p.m. on July 17, 2010.

This safety zone will not have a significant economic impact on a substantial number of small entities for the following reasons: (1) This rule will be enforced for only one half-hour on July 17, 2010; (2) Vessel traffic will be able to navigate safely around the zone without significant impact to their transit plans; and (3) Before the effective period begins, we will issue maritime advisories.

Assistance for Small Entities

Under section 213(a) of the Small Business Regulatory Enforcement Fairness Act of 1996 (Pub. L. 104–121), we offer to assist small entities in understanding the rule so that they can better evaluate its effects on them and participate in the rulemaking process.

Small businesses may send comments on the actions of Federal employees who enforce, or otherwise determine compliance with, Federal regulations to the Small Business and Agriculture Regulatory Enforcement Ombudsman and the Regional Small Business Regulatory Fairness Boards. The Ombudsman evaluates these actions annually and rates each agency's responsiveness to small business. If you wish to comment on actions by employees of the Coast Guard, call 1–888–REG–FAIR (1–888–734–3247). The Coast Guard will not retaliate against small entities that question or complain about this rule or any policy or action of the Coast Guard.

Collection of Information

This rule calls for no new collection of information under the Paperwork Reduction Act of 1995 (44 U.S.C. 3501–3520).

Federalism

A rule has implications for federalism under Executive Order 13132, Federalism, if it has a substantial direct effect on State or local governments and would either preempt State law or impose a substantial direct cost of compliance on them. We have analyzed this rule under that Order and have determined that it does not have implications for federalism.

Unfunded Mandates Reform Act

The Unfunded Mandates Reform Act of 1995 (2 U.S.C. 1531–1538) requires Federal agencies to assess the effects of their discretionary regulatory actions. In particular, the Act addresses actions that may result in the expenditure by a State, local, or tribal government, in the aggregate, or by the private sector of $100,000,000 (adjusted for inflation) or more in any one year. Though this rule will not result in such an expenditure, we do discuss the effects of this rule elsewhere in this preamble.

Taking of Private Property

This rule will not cause a taking of private property or otherwise have taking implications under Executive Order 12630, Governmental Actions and Interference with Constitutionally Protected Property Rights.

Civil Justice Reform

This rule meets applicable standards in sections 3(a) and 3(b)(2) of Executive Order 12988, Civil Justice Reform, to minimize litigation, eliminate ambiguity, and reduce burden.

Protection of Children

We have analyzed this rule under Executive Order 13045, Protection of Children from Environmental Health Risks and Safety Risks. This rule is not an economically significant rule and does not create an environmental risk to health or risk to safety that may disproportionately affect children.

Indian Tribal Governments

This rule does not have tribal implications under Executive Order 13175, Consultation and Coordination with Indian Tribal Governments, because it does not have a substantial direct effect on one or more Indian tribes, on the relationship between the Federal Government and Indian tribes, or on the distribution of power and responsibilities between the Federal Government and Indian tribes.

Energy Effects

We have analyzed this rule under Executive Order 13211, Actions Concerning Regulations That Significantly Affect Energy Supply, Distribution, or Use. We have determined that it is not a "significant energy action" under that order because it is not a "significant regulatory action" under Executive Order 12866 and is not likely to have a significant adverse effect on the supply, distribution, or use of energy. The Administrator of the Office of Information and Regulatory Affairs has not designated it as a significant energy action. Therefore, it does not require a Statement of Energy Effects under Executive Order 13211.

Technical Standards

The National Technology Transfer and Advancement Act (NTTAA) (15 U.S.C. 272 note) directs agencies to use voluntary consensus standards in their regulatory activities unless the agency provides Congress, through the Office of Management and Budget, with an explanation of why using these standards would be inconsistent with applicable law or otherwise impractical. Voluntary consensus standards are technical standards (*e.g.,* specifications of materials, performance, design, or operation; test methods; sampling procedures; and related management systems practices) that are developed or adopted by voluntary consensus standards bodies.

This rule does not use technical standards. Therefore, we did not consider the use of voluntary consensus standards.

Environment

We have analyzed this rule under Department of Homeland Security Management Directive 023–01 and Commandant Instruction M16475.lD, which guide the Coast Guard in complying with the National Environmental Policy Act of 1969 (NEPA)(42 U.S.C. 4321–4370f), and have concluded this action is one of a category of actions that do not individually or cumulatively have a significant effect on the human environment. This rule is categorically excluded, under figure 2–1, paragraph (34)(g), of the Instruction. This rule involves establishing a safety zone around a fireworks display. This zone is designed to protect mariners and spectators from the hazards associated with aerial fireworks displays. An environmental analysis checklist and a categorical exclusion determination are available in the docket where indicated under **ADDRESSES**.

List of Subjects 33 CFR Part 165

Harbors, Marine safety, Navigation (water), Reporting and recordkeeping requirements, Security measures, Waterways.

■ For the reasons discussed in the preamble, the Coast Guard amends 33 CFR part 165 as follows:

PART 165—REGULATED NAVIGATION AREAS AND LIMITED ACCESS AREAS

■ 1. The authority citation for part 165 continues to read as follows:

Authority: 33 U.S.C. 1226, 1231; 46 U.S.C. Chapter 701, 3306, 3703; 50 U.S.C. 191, 195; 33 CFR 1.05–1, 6.04–1, 6.04–6 and 160.5; Pub. L. 107–295, 116 Stat. 2064; Department of Homeland Security Delegation No. 0170.1.

■ 2. Add § 165.T05–0478 to read as follows:

§ 165.T05–0478 Safety Zone; Fireworks for the Virginia Lake Festival, Buggs Island Lake, Clarksville, VA

(a) *Regulated Area.* The following area is a safety zone: Specified waters of the Captain of the Port Sector Hampton Roads zone, as defined in 33 CFR 3.25–10, in the navigable waters of Buggs Island Lake on the causeway of the Highway 58 Business Bridge, within the area bounded by a 700-foot radius circle centered on position 36°38′02″ N/ 078°32′32″ W (NAD 1983).

(b) *Definition.* For the purposes of this part, Captain of the Port Representative means any U.S. Coast Guard commissioned, warrant or petty officer who has been authorized by the Captain of the Port, Hampton Roads, Virginia to act on his behalf.

(c) *Regulations.* (1) In accordance with the general regulations in § 165.23 of this part, entry into this zone is prohibited unless authorized by the Captain of the Port, Hampton Roads or his designated representatives.

(2) The operator of any vessel in the immediate vicinity of this safety zone shall:

(i) Stop the vessel immediately upon being directed to do so by any commissioned, warrant or petty officer on shore or on board a vessel that is displaying a U.S. Coast Guard Ensign.

(ii) Proceed as directed by any commissioned, warrant or petty officer on shore or on board a vessel that is displaying a U.S. Coast Guard Ensign.

(3) The Captain of the Port, Hampton Roads can be reached through the Sector Duty Officer at Sector Hampton Roads in Portsmouth, Virginia at telephone number (757) 638–6641.

(4) The Coast Guard Representatives enforcing the safety zone can be contacted on VHF–FM marine band radio channel 13 (165.65 Mhz) and channel 16 (156.8 Mhz).

(d) *Enforcement Period.* This regulation will be enforced from 9:30 p.m. to 10 p.m. on July 17, 2010.

Dated: June 3, 2010.

M.S. Ogle,

Captain, U.S. Coast Guard, Captain of the Port Hampton Roads.

[FR Doc. 2010–14852 Filed 6–18–10; 8:45 am]

BILLING CODE 9110–04–P

DEPARTMENT OF HOMELAND SECURITY

Coast Guard

33 CFR Part 165

[Docket No. USCG–2010–0250]

RIN 1625–AA00

Safety Zone; Chicago Tall Ships Fireworks, Lake Michigan, Chicago, IL

AGENCY: Coast Guard, DHS.

ACTION: Temporary final rule.

SUMMARY: The Coast Guard is establishing a temporary safety zone on the waters of Lake Michigan within Chicago Harbor, Chicago, Illinois. This zone is intended to restrict vessels from a portion of Chicago Harbor due to a fireworks display. This temporary safety zone is necessary to protect the surrounding public and vessels from the hazards associated with a fireworks display.

DATES: This rule is effective from 8:45 p.m. on August 24, 2010 until 9:15 p.m. August 28, 2010.

ADDRESSES: Comments and material received from the public, as well as documents mentioned in this preamble

as being available in the docket, are part of docket USCG–2010–0250 and are available online by going to *http://www.regulations.gov,* inserting USCG–2010–0250 in the "Keyword" box, and then clicking "Search." This material is also available for inspection or copying at the Docket Management Facility (M–30), U.S. Department of Transportation, West Building Ground Floor, Room W12–140, 1200 New Jersey Avenue SE., Washington, DC 20590, between 9 a.m. and 5 p.m., Monday through Friday, except Federal holidays.

FOR FURTHER INFORMATION CONTACT: If you have questions on this temporary rule, call or e-mail CWO2 Jon Grob, U.S. Coast Guard, Sector Lake Michigan, telephone (414)747–7188, e-mail *Jon.K.Grob@uscg.mil.* If you have questions on viewing the docket, call Renee V. Wright, Program Manager, Docket Operations, telephone (202) 366–9826.

SUPPLEMENTARY INFORMATION:

Regulatory Information

On May 3, 2010, we published a notice of proposed rulemaking (NPRM) entitled Safety Zone; Chicago Tall Ships Fireworks, Chicago, IL in the **Federal Register** (75 FR 23209). We received 0 comments on the proposed rule. No public meeting was requested and none was held.

Basis and Purpose

This temporary safety zone is necessary to protect vessels from the hazards associated with the Chicago Tall Ships Fireworks display. The Captain of the Port, Sector Lake Michigan has determined that the Chicago Tall Ships Fireworks display presents a significant risk to public safety and property. The likely combination of congested waterways and a fireworks display presents a significant risk of serious injuries or fatalities.

Discussion of Comments and Changes

No public comments were received concerning this event. No substantive changes have been made to the rule as proposed.

Regulatory Analyses

We developed this rule after considering numerous statutes and executive orders related to rulemaking. Below we summarize our analyses based on 13 of these statutes or executive orders.

Regulatory Planning and Review

This rule is not a significant regulatory action under section 3(f) of Executive Order 12866, Regulatory Planning and Review, and does not require an assessment of potential costs and benefits under section 6(a)(3) of that Order. The Office of Management and Budget has not reviewed it under that Order. We conclude that this rule is not a significant regulatory action because we anticipate that it will have minimal impact on the economy, will not interfere with other agencies, will not adversely alter the budget of any grant or loan recipients, and will not raise any novel legal or policy issues. The safety zone will be relatively small and will exist for only a minimal time. Under certain conditions, moreover, vessels may still transit through the safety zone when permitted by proper authority.

Small Entities

Under the Regulatory Flexibility Act (5 U.S.C. 601–612), we have considered whether this rule would have a significant economic impact on a substantial number of small entities. The term "small entities" comprises small businesses, not-for-profit organizations that are independently owned and operated and are not dominant in their fields, and governmental jurisdictions with populations of less than 50,000.

The Coast Guard certifies under 5 U.S.C. 605(b) that this rule will not have a significant economic impact on a substantial number of small entities.

This rule will affect the following entities, some of which might be small entities: The owners or operators of vessels intending to transit or anchor in a portion of Chicago Harbor between 8:45 p.m. until 9:15 p.m. from August 24, 2010 through August 28, 2010.

This safety zone will not have a significant economic impact on a substantial number of small entities for the following reasons: This rule will only be enforced for short period of time. Vessels may safely pass outside the safety zone during the event. In the event that this temporary safety zone affects shipping, commercial vessels may request permission from the Captain of the Port, Sector Lake Michigan to transit through the safety zone. The Coast Guard will give notice to the public via a Broadcast to Mariners that the regulation is in effect.

Assistance for Small Entities

Under section 213(a) of the Small Business Regulatory Enforcement Fairness Act of 1996 (Pub. L. 104–121), in the NPRM we offered to assist small entities in understanding the rule so that they could better evaluate its effects on them and participate in the rulemaking process.

Small businesses may send comments on the actions of Federal employees who enforce, or otherwise determine compliance with, Federal regulations to the Small Business and Agriculture Regulatory Enforcement Ombudsman and the Regional Small Business Regulatory Fairness Boards. The Ombudsman evaluates these actions annually and rates each agency's responsiveness to small business. If you wish to comment on actions by employees of the Coast Guard, call 1–888–REG–FAIR (1–888–734–3247). The Coast Guard will not retaliate against small entities that question or complain about this rule or any policy or action of the Coast Guard.

Collection of Information

This rule calls for no new collection of information under the Paperwork Reduction Act of 1995 (44 U.S.C. 3501–3520).

Federalism

A rule has implications for federalism under Executive Order 13132, Federalism, if it has a substantial direct effect on State or local governments and would either preempt State law or impose a substantial direct cost of compliance on them. We have analyzed this rule under that Order and have determined that it does not have implications for federalism. No comments were received concerning this rule. No substantive changes have been made to the rule as proposed.

Unfunded Mandates Reform Act

The Unfunded Mandates Reform Act of 1995 (2 U.S.C. 1531–1538) requires Federal agencies to assess the effects of their discretionary regulatory actions. In particular, the Act addresses actions that may result in the expenditure by a State, local, or tribal government, in the aggregate, or by the private sector of $100,000,000 (adjusted for inflation) or more in any one year. Though this rule will not result in such an expenditure, we do discuss the effects of this rule elsewhere in this preamble. No comments were received concerning this rule. No substantive changes have been made to the rule as proposed.

Taking of Private Property

This rule will not cause a taking of private property or otherwise have taking implications under Executive Order 12630, Governmental Actions and Interference with Constitutionally Protected Property Rights. No comments were received concerning this rule. No substantive changes have been made to the rule as proposed.

Civil Justice Reform

This rule meets applicable standards in sections 3(a) and 3(b)(2) of Executive Order 12988, Civil Justice Reform, to minimize litigation, eliminate ambiguity, and reduce burden. No comments were received concerning this rule. No substantive changes have been made to the rule as proposed.

Protection of Children

We have analyzed this rule under Executive Order 13045, Protection of Children from Environmental Health Risks and Safety Risks. This rule is not an economically significant rule and does not create an environmental risk to health or risk to safety that may disproportionately affect children. No comments were received concerning this rule. No substantive changes have been made to the rule as proposed.

Indian Tribal Governments

This rule does not have tribal implications under Executive Order 13175, Consultation and Coordination with Indian Tribal Governments, because it does not have a substantial direct effect on one or more Indian tribes, on the relationship between the Federal Government and Indian tribes, or on the distribution of power and responsibilities between the Federal Government and Indian tribes. No comments were received concerning this rule. No substantive changes have been made to the rule as proposed.

Energy Effects

We have analyzed this rule under Executive Order 13211, Actions Concerning Regulations That Significantly Affect Energy Supply, Distribution, or Use. We have determined that it is not a "significant energy action" under that order because it is not a "significant regulatory action" under Executive Order 12866 and is not likely to have a significant adverse effect on the supply, distribution, or use of energy. The Administrator of the Office of Information and Regulatory Affairs has not designated it as a significant energy action. Therefore, it does not require a Statement of Energy Effects under Executive Order 13211. No comments were received concerning this rule. No substantive changes have been made to the rule as proposed.

Technical Standards

The National Technology Transfer and Advancement Act (NTTAA) (15 U.S.C. 272 note) directs agencies to use voluntary consensus standards in their regulatory activities unless the agency provides Congress, through the Office of Management and Budget, with an explanation of why using these standards would be inconsistent with applicable law or otherwise impractical. Voluntary consensus standards are technical standards (*e.g.,* specifications of materials, performance, design, or operation; test methods; sampling procedures; and related management systems practices) that are developed or adopted by voluntary consensus standards bodies.

This rule does not use technical standards. Therefore, we did not consider the use of voluntary consensus standards. No comments were received concerning this rule. No substantive changes have been made to the rule as proposed.

Environment

We have analyzed this rule under Department of Homeland Security Management Directive 023–01 and Commandant Instruction M16475.lD, which guide the Coast Guard in complying with the National Environmental Policy Act of 1969 (NEPA) (42 U.S.C. 4321–4370f), and have concluded this action is one of a category of actions that do not individually or cumulatively have a significant effect on the human environment. This rule is categorically excluded, under figure 2–1, paragraph (34)(g), of the Instruction. This rule involves the establishment of a safety zone therefore paragraph (34)(g) of the Instruction applies.

An environmental analysis checklist and a categorical exclusion determination are available in the docket where indicated under **ADDRESSES**.

List of Subjects in 33 CFR Part 165

Harbors, Marine Safety, Navigation (water), Reporting and record keeping requirements, Security measures, Waterways.

■ For the reasons discussed in the preamble, the Coast Guard amends 33 CFR Part 165 as follows:

PART 165—REGULATED NAVIGATION AREAS AND LIMITED ACCESS AREAS

■ 1. The authority citation for part 165 continues to read as follows:

Authority: 33 U.S.C. 1226, 1231; 46 U.S.C. Chapter 701, 3306, 3703; 50 U.S.C. 191, 195; 33 CFR 1.05–1, 6.04–1, 6.04–6, and 160.5; Pub. L. 107–295, 116 Stat. 2064; Department of Homeland Security Delegation No. 0170.1.

■ 2. Add § 165.T09–0250 to read as follows:

§ 165.T09–0250 Safety Zone; Chicago Tall Ships Fireworks, Chicago Harbor, Chicago, IL

(a) *Location.* The safety zone will encompass all waters of Lake Michigan in the vicinity of Chicago Harbor located off the north east end of Navy Pier, encompassing an area 600 yards by 750 yards bound by a line drawn from bound by a line drawn from 41°53′24″ N., 087°35′55″ W.; then north to 41°53′41″ N., 087°35′55″ W.; then east to 41°53′41″ N., 087°35′26″ W.; then south to 41°53′24″ N., 087°35′26″ W.; then west returning to the point of origin (NAD 83).

(b) *Effective period.* This regulation is effective from 8:45 p.m. on August 24, 2010 until 9:15 p.m. on August 28, 2010. It will be enforced between 8:45 p.m. and 9:15 p.m. on August 24, 2010, between the hours of 8:45 p.m. and 9:15 p.m. on August 25, 2010, between the hours of 8:45 p.m. and 9:15 p.m. on August 26, 2010, between the hours of 8:45 p.m. and 9:15 p.m. on August 27, 2010, and again between the hours of 8:45 p.m. and 9:15 p.m. on August 28, 2010. The Captain of the Port, Sector Lake Michigan, or his or her on-scene representative may terminate this operation at anytime.

(c) *Regulations.* (1) In accordance with the general regulations in section 165.23 of this part, entry into, transiting, or anchoring within this safety zone is prohibited unless authorized by the Captain of the Port, Sector Lake Michigan, or his or her on-scene representative.

(2) This safety zone is closed to all vessel traffic, except as may be permitted by the Captain of the Port, Sector Lake Michigan, or his or her on-scene representative.

(3) The "on-scene representative" of the Captain of the Port is any Coast Guard commissioned, warrant or petty officer who has been designated by the Captain of the Port to act on his or her behalf. The on-scene representative of the Captain of the Port, Sector Lake Michigan, will be aboard either a Coast Guard or Coast Guard Auxiliary vessel.

(4) Vessel operators desiring to enter or operate within the safety zone shall contact the Captain of the Port, Sector Lake Michigan, or his or her on-scene representative to obtain permission to do so. The Captain of the Port, Sector Lake Michigan, or his or her on-scene representative may be contacted via VHF Channel 16. Vessel operators given permission to enter or operate in the safety zone must comply with all directions given to them by the Captain of the Port, Sector Lake Michigan, or his or her on-scene representative.

Dated: June 3, 2010.

L. Barndt,

Captain, U.S. Coast Guard, Captain of the Port, Sector Lake Michigan.

[FR Doc. 2010–14848 Filed 6–18–10; 8:45 am]

BILLING CODE 9110–04–P

ENVIRONMENTAL PROTECTION AGENCY

40 CFR Part 52

[EPA–R05–OAR–2005–OH–0003; FRL–9159–3]

Approval and Promulgation of Air Quality Implementation Plans; Ohio; Final Approval and Promulgation of State Implementation Plans; Carbon Monoxide and Volatile Organic Compounds

AGENCY: Environmental Protection Agency (EPA).

ACTION: Final rule.

SUMMARY: In this action, under the Clean Air Act, we are: Approving into the State Implementation Plan (SIP) certain regulation revisions within Ohio Administrative Code (OAC) 3745–21 (Carbon Monoxide, Photochemically Reactive Materials, Hydrocarbons, and related Materials Standards) which have been adopted by the State; recognizing various emission control exemptions that have been granted for miscellaneous metal coating operations under OAC 3745–21–09(U)(2)(f); and taking no action on certain regulation revisions. We proposed to take these actions in a document published on January 22, 2010, and received no comments.

DATES: This final rule is effective on July 21, 2010.

ADDRESSES: EPA has established a docket for this action under Docket ID No. EPA–R05–OAR–2005–OH–0003. All documents in the docket are listed on the *www.regulations.gov* Web site. Although listed in the index, some information is not publicly available, *i.e.,* Confidential Business Information (CBI) or other information whose disclosure is restricted by statute. Certain other material, such as copyrighted material, is not placed on the Internet and will be publicly available only in hard copy form. Publicly available docket materials are available either electronically through *www.regulations.gov* or in hard copy at the Environmental Protection Agency, Region 5, Air and Radiation Division, 77 West Jackson Boulevard, Chicago, Illinois 60604. This facility is open from 8:30 a.m. to 4:30 p.m., Monday through Friday, excluding Federal holidays. We recommend that you telephone Anthony Maietta, Environmental Protection Specialist, at (312) 353–8777 before visiting the Region 5 office.

FOR FURTHER INFORMATION CONTACT: Anthony Maietta, Environmental Protection Specialist, Criteria Pollutant Section, Air Programs Branch (AR–18J), Environmental Protection Agency, Region 5, 77 West Jackson Boulevard, Chicago, Illinois 60604, (312) 353–8777; *maietta.anthony@epa.gov.*

SUPPLEMENTARY INFORMATION: Throughout this document whenever "we," "us," or "our" is used, we mean EPA. This supplementary information section is arranged as follows:

I. What were EPA's proposed actions?
II. Public Comments and EPA Responses
III. What action is EPA taking?
IV. Statutory and Executive Order Reviews

I. What were EPA's proposed actions?

This action addresses revisions to OAC 3745–21 in a set of submittals dated October 9, 2000, February 6, 2001, and August 3, 2001; and also addresses revisions to OAC 3745–21, submitted on June 24, 2003, as part of Ohio's five-year rule review process. On January 22, 2010 (75 FR 3668), EPA proposed a variety of actions regarding revisions to OAC 3745–21. We proposed to approve: (1) Revisions to the rules which corrected grammar and spelling mistakes; (2) revisions to attainment dates and compliance schedules listed within the rules; (3) clarifications which made hard-to-interpret portions of the rules easier to understand; (4) removal of an exemption for certain geographic areas to carbon monoxide (CO) rules; and, (5) site specific emissions limit amendments. Our proposed action contains more information on the rule revisions submitted and our evaluation of them.

In our proposed action, we also provided extensive discussion regarding a provision of 2745–21–09(U)(2)(f) authorizing alternate miscellaneous metal coating limits in selected cases. EPA proposed to recognize alternate limits that Ohio issued during a period when the State had unilateral authority to do so. EPA also described a process developed in concert with Ohio EPA for addressing future requests for such alternate limits. Further discussion of this process, as well as more information on the rule revisions submitted and our evaluation of them, can be found in our proposed action.

We proposed conditional approval of PAC 3745–21–09(BBB)(1) (which affects the BF Goodrich Company Akron Chemical Plant) and disapproval of OAC 3745–21–09(U)(1)(h) (which affects sources conducting surface coating of miscellaneous metal parts and products). For administrative convenience, we will complete rulemaking on these portions of Ohio's submittal in a later action.

II. Public Comments and EPA Responses

EPA's proposed action provided a 30-day public comment period. We did not receive any comments on the proposed action.

III. What action is EPA taking?

EPA today is only approving rules submitted by Ohio which have not been separately approved. For the full listing of rules we proposed to approve, please see the proposed rulemaking for today's action (75 FR 3668). In a separate rulemaking on July 28, 2009 (74 FR 37171), EPA has already approved later versions of certain rules. Additional information on the approval of these rules is provided in the proposal for that action published on May 7, 2009, at 74 FR 21295.

EPA is fully approving into the Ohio SIP the following revised rule paragraphs as adopted by the State of Ohio and as defined in Ohio's submittals:

In OAC 3745–21–09, title, paragraphs (A)(4), (B)(3)(a), (B)(3)(d), (B)(3)(e), (B)(3)(f), (B)(3)(h), (B)(3)(j), (B)(3)(l), (B)(4)(a), (B)(4)(b), (C)(4), (H)(1)(a), (H)(1)(b), (H)(3), (O)(5)(b), (O)(6)(a), (O)(6)(b), (R)(4), the portion of paragraph (U)(2)(e) which states "Daily usage limitations included in (U)(2)(e)(i) through (U)(2)(e)(iii) above shall not apply to coatings employed by the metal parts or products coating line on parts or products which are not metal", (U)(2)(h), (Y)(1)(a)(i), (AA)(1)(b), (AA)(1)(c), (FF)(1), (II)(2), (II)(3), (II)(4), (KK)(1), (NN)(1), (NN)(2), (NN)(3),(NN)(4), (NN)(5), (OO), (OO)(1), (OO)(2), (OO)(3), (OO)(4), (PP)(2), (UU)(3), (AAA), (DDD), and Appendix A.

EPA is taking no action on revisions to 3745–21–09(U)(2)(f), from both the October 9, 2000, and June 24, 2003, submittals, because EPA approved a later version of this paragraph on July 28, 2009 (74 FR 37171). EPA will continue to honor exemptions granted by Ohio under this rule as it existed in the SIP after May 5, 1995, but prior to June 15, 1999. This leaves two time periods in which Ohio issued permits and amendments for which there are two separate methods to incorporate affected permits and amendments into the SIP: Prior to May 5, 1995, and after June 15, 1999. EPA will address any

exemptions granted prior to May 5, 1995, in a separate rulemaking after we work with Ohio EPA to determine the proper course of action for dealing with these sources. EPA will address any sources seeking alternate limits under this paragraph after June 15, 1999, as they will be subject to limits which result from the ongoing EPA and Ohio EPA resolution of this matter.

EPA is also taking no action on revisions to OAC 3725–21 chapters 01, 02, 03, 04, 06, 08, and 10 because newer versions of these chapters were approved and incorporated into Ohio's SIP in a subsequent rulemaking (74 FR 37171).

IV. Statutory and Executive Order Reviews

Under the Clean Air Act, the Administrator is required to approve a SIP submission that complies with the provisions of the Clean Air Act and applicable Federal regulations. 42 U.S.C. 7410(k); 40 CFR 52.02(a). Thus, in reviewing SIP submissions, EPA's role is to approve State choices, provided that they meet the criteria of the Clean Air Act. Accordingly, this action merely approves State law as meeting Federal requirements and does not impose additional requirements beyond those imposed by State law. For that reason, this action:

- Is not a "significant regulatory action" subject to review by the Office of Management and Budget under Executive Order 12866 (58 FR 51735, October 4, 1993);
- Does not impose an information collection burden under the provisions of the Paperwork Reduction Act (44 U.S.C. 3501 *et seq.*);
- Is certified as not having a significant economic impact on a substantial number of small entities under the Regulatory Flexibility Act (5 U.S.C. 601 *et seq.*);
- Does not contain any unfunded mandate or significantly or uniquely affect small governments, as described in the Unfunded Mandates Reform Act of 1995 (Pub. L. 104–4);
- Does not have Federalism implications as specified in Executive Order 13132 (64 FR 43255, August 10, 1999);
- Is not an economically significant regulatory action based on health or safety risks subject to Executive Order 13045 (62 FR 19885, April 23, 1997);
- Is not a significant regulatory action subject to Executive Order 13211 (66 FR 28355, May 22, 2001);
- Is not subject to requirements of Section 12(d) of the National Technology Transfer and Advancement Act of 1995 (15 U.S.C. 272 note) because application of those requirements would be inconsistent with the Clean Air Act; and
- Does not provide EPA with the discretionary authority to address, as appropriate, disproportionate human health or environmental effects, using practicable and legally permissible methods, under Executive Order 12898 (59 FR 7629, February 16, 1994).

In addition, this rule does not have tribal implications as specified by Executive Order 13175 (65 FR 67249, November 9, 2000), because the SIP is not approved to apply in Indian country located in the State, and EPA notes that it will not impose substantial direct costs on tribal governments or preempt tribal law.

The Congressional Review Act, 5 U.S.C. 801 *et seq.,* as added by the Small Business Regulatory Enforcement Fairness Act of 1996, generally provides that before a rule may take effect, the agency promulgating the rule must submit a rule report, which includes a copy of the rule, to each House of the Congress and to the Comptroller General of the United States. EPA will submit a report containing this action and other required information to the U.S. Senate, the U.S. House of Representatives, and the Comptroller General of the United States prior to publication of the rule in the **Federal Register.** A major rule cannot take effect until 60 days after it is published in the **Federal Register.** This action is not a "major rule" as defined by 5 U.S.C. 804(2).

Under section 307(b)(1) of the Clean Air Act, petitions for judicial review of this action must be filed in the United States Court of Appeals for the appropriate circuit by August 20, 2010. Filing a petition for reconsideration by the Administrator of this final rule does not affect the finality of this action for the purposes of judicial review nor does it extend the time within which a petition for judicial review may be filed, and shall not postpone the effectiveness of such rule or action. This action may not be challenged later in proceedings to enforce its requirements. (*See* section 307(b)(2).)

List of Subjects in 40 CFR Part 52

Environmental protection, Air pollution control, Carbon monoxide, Incorporation by reference, Intergovernmental relations, Volatile organic compounds.

Dated: May 20, 2010.

Walter W. Kovalick, Jr.,

Acting Regional Administrator, Region 5.

■ 40 CFR part 52 is amended as follows:

PART 52—[AMENDED]

■ 1. The authority citation for part 52 continues to read as follows:

Authority: 42 U.S.C. 7401 *et seq.*

Subpart KK—Ohio

■ 2. Section 52.1870 is amended by adding paragraphs (c)(102)(i)(C)(1) and (c)(149) to read as follows:

§ 52.1870 Identification of plan.

* * * * *

(c) * * *

(102) * * *

(i) * * *

(C) * * *

(1) Previously approved on October 31, 1995 in paragraph (c)(102)(i)(C) of this section and now deleted without replacement: OEPA OAC Rule 3745–21–09, Control of Emissions of Volatile Organic Compounds from Stationary Sources, Paragraph (AAA), as adopted by Ohio on October 25, 2002, effective on November 5, 2002.

* * * * *

(149) On October 9, 2000, February 6, 2001, August 3, 2001, and June 24, 2003, Ohio submitted revisions to Ohio Administrative Code (OAC) Chapter 3745–21 to address a variety of changes to its Carbon Monoxide and Volatile Organic Compounds regulations. The pertinent provisions are in OAC 3745–21–09; for other rules in these submittals, later versions have been addressed in separate rulemaking (*see* paragraph 146 of this section).

(i) Incorporation by reference.

(A) The following paragraphs of OAC 3745–21–09, entitled "*Control of emissions of volatile organic compounds from stationary sources and perchloroethylene from dry cleaning facilities,*" as adopted by Ohio on October 25, 2002, effective on November 5, 2002:

(1) Paragraphs (A)(4), (B)(3)(a), (B)(3)(d), (B)(3)(e), (B)(3)(f), (B)(3)(h), (B)(3)(j), (B)(3)(l), (B)(4)(a), (B)(4)(b), (C)(4), (H)(1), (H)(3), (O)(5)(b), (O)(6), (R)(4), (U)(2)(h), (Y)(1)(a)(i), (AA)(1)(b), (AA)(1)(c), (FF)(1), (II)(2), (II)(3), (II)(4), (KK)(1), (NN), (OO), (PP)(2), (UU)(3), (DDD), and Appendix A.

(2) Within paragraph (U), the undesignated paragraph following (U)(2)(e).

(B) October 25, 2002, "Director's Final Findings and Orders", signed by Christopher Jones, Director, Ohio Environmental Protection Agency.

(ii) Additional Information. The following permits to install authorizing exemptions under OAC Rule 3745–21–09(U)(2)(f) were issued by Ohio during the time period when the State had unilateral authority to issue them.

(A) Permit To Install issued by the State Of Ohio to Chase Industries, Inc, Cincinnati, OH, on June 24, 1998, for emissions unit K002, pursuant to application number 14–4578.

(B) Permit To Install issued by the State Of Ohio to CAE Ransohoff, Inc., Union, OH, on March 5, 1997, for emissions units K001 and K002, pursuant to application number 14–4268.

(C) Permit To Install issued by the State Of Ohio to Phoenix Presentations, Inc., Butler County, OH, on January 21, 1999, for emissions units R001, R002, and R003, pursuant to application number 14–4612.

(D) Permit To Install issued by the State Of Ohio to CTL Aerospace, Inc., Cincinnati, OH, on August 19, 1998, for emissions unit R005, pursuant to application number 14–4572.

(E) Permit To Install issued by the State Of Ohio to Hamilton Fixture, Hamilton, OH, on April 24, 1996, for emissions unit R006, pursuant to application number 14–4014.

(F) Permit To Install issued by the State Of Ohio to Lt. Moses Willard, Inc., Milford, OH, on December 23, 1997, for emissions units K001 and K002, pursuant to application number 14–4220.

(G) Permit To Install issued by the State Of Ohio to WHM Equipment Co., Cincinnati, OH, on May 28, 1997, for emissions unit K001, pursuant to application number 14–4348.

(H) Permit To Install issued by the State Of Ohio to Panel-Fab, Inc., Cincinnati, OH, on June 12, 1996, for emissions unit K001, pursuant to application number 14–4027.

(I) Permit To Install issued by the State Of Ohio to Cincinnati Fan & Ventilator, Mason, OH, on June 15, 1995, for emissions unit K003, pursuant to application number 14–3774.

(J) Permit To Install issued by the State Of Ohio to Honda of America Manufacturing, Inc., Marysville, OH, on December 24, 1997, for emissions units R003, and R103, pursuant to application number 01–6743.

(K) Permit To Install issued by the State Of Ohio to Durr Ecoclean, Inc. (formerly Henry Filters, Inc.), Bowling Green, OH, on June 26, 1996, for emissions unit K001 pursuant to application number 03–9510.

(L) Permit To Install issued by the State Of Ohio to Honda of America Manufacturing, Inc., East Liberty, OH, on April 17, 1996, for emissions units K009 and K013, pursuant to application number 05–7923.

(M) Permit To Install issued by the State Of Ohio to American Trim, LLC (formerly Stolle Corporation, Stolle Products Division), Sidney, OH, on September 13, 1995, K045, pursuant to application number 05–7329.

(N) Permit To Install issued by the State Of Ohio to American Trim, LLC (formerly Stolle Products), Sidney, OH, on December 3, 1998, for emissions unit K048, pursuant to application number 05–9516.

(O) Permit To Install issued by the State Of Ohio to Hawkline Nevada, LLC (formerly Trinity Industries, Inc.), Plant 101, Mt. Orab, OH, on February 28, 1996, for emissions unit K001, pursuant to application number 07–407.

(P) Permit To Install issued by the State Of Ohio to American Trim, LLC (formerly Superior Metal Products), Lima, OH, on July 23, 1997, for emissions unit K002, pursuant to application number 03–0397.

[FR Doc. 2010–14902 Filed 6–18–10; 8:45 am]

BILLING CODE 6560–50–P

FEDERAL COMMUNICATIONS COMMISSION

47 CFR Part 76

[MB Docket No. 07–198; FCC 10–17]

Review of the Commission's Program Access Rules and Examination of Programming Tying Arrangements

AGENCY: Federal Communications Commission

ACTION: Final Rule; announcement of effective date.

SUMMARY: In this document, the Commission announces that the Office of Management and Budget (OMB) has approved, for a period of three years, the information collection requirements associated with new rules 47 CFR Sections 76.1001(b)(2) and 76.1003(l), and the amendment to 47 CFR Section 76.1003(c)(3). On March 3, 2010, the Commission published the summary document of the First Report and Order, In the Matter of Review of the Commission's Program Access Rules and Examination of Programming Tying Arrangements, MB Docket No. 07–198, FCC 10–17, at 75 FR 9692. The Ordering Clause of the First Report and Order stated that new rules 47 CFR Sections 76.1001(b)(2) and 76.1003(1) and the amendment to 47 CFR Section 76.1003(c)(3) will become effective after the Commission publishes a document in the Federal Register announcing when OMB approval for the information collection requirements associated with these rules has been received and when the revised rules will take effect. This document is consistent with the statement in the First Report and Order. Therefore, these rules will take effect on June 21, 2010.

DATES: 47 CFR Sections 76.1001(b)(2) and 76.1003(l), and the amendment to 47 CFR Section 76.1003(c)(3) published at 75 FR 9692, March 3, 2010 are effective on June 21, 2010.

FOR FURTHER INFORMATION CONTACT: Cathy Williams, cathy.williams@fcc.gov or on (202) 418–2918.

SUPPLEMENTARY INFORMATION: This document announces that, on June 14, 2010, OMB approved, for a period of three years, the information collection requirement(s) contained in new rules 47 CFR Sections 76.1001(b)(2) and 76.1003(l), and the amendment to 47 CFR 76.1003(c)(3). The Commission publishes this document to announce the effective date of these rules.

SYNOPSIS

As required by the Paperwork Reduction Act of 1995 (44 U.S.C. 3507), the Commission is notifying the public that it received OMB approval on June 14, 2010, for the information collection requirement(s) contained in new rules 47 CFR Sections 76.1001(b)(2) and 76.1003(l), and the amendment to 47 CFR 76.1003(c)(3).

Under 5 CFR 1320, an agency may not conduct or sponsor a collection of information unless it displays a current, valid OMB Control Number.

No person shall be subject to any penalty for failing to comply with a collection of information subject to the Paperwork Reduction Act that does not display a valid OMB Control Number.

The OMB Control Number is 3060–0888 and the total annual reporting burdens for respondents for these information collections are as follows:

OMB Control Number: 3060–0888.

OMB Approval Date: June 14, 2010.

Expiration Date: June 30, 2013.

Title: Section 76.7, Petition Procedures; Section 76.9, Confidentiality of Proprietary Information; Section 76.61, Dispute Concerning Carriage; Section 76.914, Revocation of Certification; Section 76.1001, Unfair Practices; Section 76.1003, Program Access Proceedings; Section 76.1302, Carriage Agreement Proceedings; Section 76.1513, Open Video Dispute Resolution.

Form Number: Not applicable.

Type of Review: Revision of a currently approved collection.

Respondents: Business or other for–profit entities.

Number of Respondents and Responses: 640 respondents; 640 responses.

Estimated Time per Response: 4.5 – 67.5 hours.

Frequency of Response: On occasion reporting requirement; Third party disclosure requirement.

Total Annual Burden: 23,040 hours.

Total Annual Costs: $1,065,600.

Obligation to Respond: Required to obtain or retain benefits. The statutory authority for this information collection is contained in Sections 4(i), 303(r), and 628 of the Communications Act of 1934, as amended.

Nature and Extent of Confidentiality: A party that wishes to have confidentiality for proprietary information with respect to a submission it is making to the Commission must file a petition pursuant to the pleading requirements in Section 76.7 and use the method described in Sections 0.459 and 76.9 to demonstrate that confidentiality is warranted.

Privacy Act Impact Assessment: No impact(s).

Needs and Uses: On January 20, 2010, the Commission adopted a First Report and Order, In the Matter of Review of the Commission's Program Access Rules and Examination of Programming Tying Arrangements, MB Docket No. 07–198, FCC 10–17. In the First Report and Order, the Commission established rules, policies, and procedures for the consideration of complaints alleging unfair acts involving terrestrially delivered, cable–affiliated programming in violation of Section 628(b) of the Communications Act. The Commission also established procedures for the consideration of requests for a temporary standstill of the price, terms, and other conditions of an existing programming contract by a program access complainant seeking renewal of such a contract.

Federal Communications Commission.

Marlene H. Dortch,

Secretary,

Office of the Secretary,

Office of Managing Director.

[FR Doc. 2010-14877 Filed 6–18–10; 8:45 am]

BILLING CODE 6712–01–S

DEPARTMENT OF DEFENSE

Defense Acquisition Regulations System

48 CFR Parts 217 and 241

RIN 0750–AG48

Defense Federal Acquisition Regulation Supplement; Multiyear Contract Authority for Electricity From Renewable Energy Sources (DFARS Case 2008–D006)

AGENCY: Defense Acquisition Regulations System; Department of Defense (DoD).

ACTION: Interim rule with request for comments.

SUMMARY: DoD is issuing an interim rule to implement section 828 of the National Defense Authorization Act for Fiscal Year 2008. Section 828 authorizes the Secretary of Defense to enter into a contract for a period not to exceed 10 years for the purchase of electricity from sources of renewable energy.

DATES: *Effective Date:* June 21, 2010.

Comment Date: Comments on the interim rule should be submitted in writing to the address shown below on or before August 20, 2010, to be considered in the formation of the final rule.

ADDRESSES: Submit comments identified by DFARS Case 2008–D006 by any of the following methods:

- *Federal eRulemaking Portal: http://www.regulations.gov.* Follow the instructions for submitting comments.
- *E-mail: dfars@osd.mil.* Include DFARS Case 2008–D006 in the subject line of the message.
- *Fax:* 703–602–0350.
- *Mail:* Defense Acquisition Regulations System, Attn: Cassandra Freeman, OUSD (AT&L) DPAP/DARS, Room 3B855, 3060 Defense Pentagon, Washington, DC 20301–3060

All comments received will be posted to *http://www.regulations.gov,* including any personal information provided.

FOR FURTHER INFORMATION CONTACT: Ms. Cassandra Freeman, 703–602–8383. Please cite DFARS Case 2008–D006.

SUPPLEMENTARY INFORMATION:

A. Background

This interim rule implements section 828 of the National Defense Authorization Act for Fiscal Year 2008 (Pub. L. 110–181). It amends DFARS parts 217 and 241 to authorize the Department of Defense to enter into a contract for a period not to exceed 10 years for the purchase of electricity from sources of renewable energy, as that term is defined in section 203(b)(2) of the Energy Policy Act of 2005 (42 U.S.C. 15852(b)(2)). DoD may exercise this authority to enter into a contract for a period in excess of five years only if the head of the contracting activity determines, on the basis of a business case analysis prepared by DoD, that—

(1) The proposed purchase of electricity under such contract is cost effective; and

(2) It would not be possible to purchase electricity from the source in an economical manner without the use of a contract for a period in excess of five years.

This rule was subject to Office of Management and Budget review under Executive Order 12866, dated September 30, 1993.

B. Regulatory Flexibility Act

DoD has prepared an initial regulatory flexibility analysis consistent with 5 U.S.C. 604. The analysis is summarized below and a copy may be obtained from the point of contact specified herein. There are a very limited number of small businesses engaged in the sale of energy-related services to include the sale of renewable energy. Those small businesses that engage in energy-related activities tend to have more than one area of competency, such as fossil fuel electric power, distribution of electric power, or other electric power generation, etc. With the potential overlap of competencies, it is very likely that a small business may have more than one of these competencies, thereby reducing the number of small businesses in these areas. The market for renewable fuels is highly volatile and does not have the predictability as compared to other fuel markets. Renewable energy and alternative fuel projects are capital-intensive investments, and involve the construction of production facilities which provides limitations to small entities. At this time, DoD is unable to estimate the number of small entities to which this rule will apply. DoD invites comments from small business concerns and other interested parties on the expected impact of this rule on small entities.

DoD will also consider comments from small entities concerning the existing regulations in subparts affected by this rule in accordance with 5 U.S.C. 610. Interested parties must submit such comments separately and should cite 5 U.S.C. 610 (DFARS Case 2008–D006) in correspondence.

C. Paperwork Reduction Act

The Paperwork Reduction Act (Pub. L. 96–511) does not apply because the

rule does not impose additional information collection requirements that require the approval of the Office of Management and Budget under 44 U.S.C. 3501, *et seq.*

D. Determination To Issue an Interim Rule

A determination has been made under the authority of the Secretary of Defense that urgent and compelling reasons exist to publish an interim rule prior to affording the public an opportunity to comment. This interim rule authorizes and establishes conditions under which the Department of Defense may enter into a contract for a period not to exceed 10 years for the purchase of electricity from sources of renewable energy, pursuant to section 828 of the National Defense Authorization Act for Fiscal Year 2008. It is necessary to publish this rule prior to obtaining public comments because the statute became effective upon enactment, and it is imperative that DoD contracting officers be aware of the conditions under which DoD may enter into such contracts to ensure that they are in compliance with the requirements of the Act. However, DoD will consider public comments received in response to this interim rule in the formation of the final rule.

List of Subjects in 48 CFR Parts 217 and 241

Government procurement.

Ynette R. Shelkin,

Editor, Defense Acquisition Regulations System.

■ Therefore, 48 CFR parts 217 and 241 are amended as follows:

■ 1. The authority citation for 48 CFR parts 217 and 241 continues to read as follows:

Authority: 41 U.S.C. 421 and 48 CFR chapter 1.

PART 217—SPECIAL CONTRACTING METHODS

■ 2. Section 217.175 is added to read as follows:

217.175 Multiyear contracts for electricity from renewable energy sources.

(a) The head of the contracting activity may enter into a contract for a period not to exceed 10 years for the purchase of electricity from sources of renewable energy, as that term is defined in section 203(b)(2) of the Energy Policy Act of 2005 (42 U.S.C. 15852(b)(2)).

(b) *Limitations.* The head of the contracting activity may exercise the authority in paragraph (a) of this section to enter into a contract for a period in excess of five years only if the head of the contracting activity determines, on the basis of a business case analysis (*see* PGI 217.1, Supplemental Information TAB, for a business case analysis template and guidance) prepared by the requiring activity, that—

(1) The proposed purchase of electricity under such contract is cost effective; and

(2) It would not be possible to purchase electricity from the source in an economical manner without the use of a contract for a period in excess of five years.

(c) Nothing in this section shall be construed to preclude the DoD from using other multiyear contracting authority of DoD to purchase renewable energy.

PART 241—ACQUISITION OF UTILITY SERVICES

■ 3. Section 241.103 is amended by redesignating existing paragraph (2) as paragraph (3); and by adding new paragraph (2) to read as follows:

241.103 Statutory and delegated authority.

* * * * *

(2) *See* 217.175 for authority to enter into multiyear contracts for electricity from renewable energy sources.

* * * * *

[FR Doc. 2010–14938 Filed 6–18–10; 8:45 am]

BILLING CODE 5001–08–P

DEPARTMENT OF DEFENSE

Defense Acquisition Regulations System

48 CFR Parts 225 and 252

[DFARS Case 2008–D024]

RIN 0750–AG13

Defense Federal Acquisition Regulation Supplement; Para-Aramid Fibers and Yarns Manufactured in a Qualifying Country

AGENCY: Defense Acquisition Regulations System, Department of Defense (DoD).

ACTION: Final rule.

SUMMARY: DoD is adopting as final, with changes, the interim rule amending the Defense Federal Acquisition Regulation Supplement (DFARS) to implement determinations made by the Under Secretary of Defense for Acquisition, Technology, and Logistics with regard to the acquisition of items containing para-aramid fibers and yarns manufactured in foreign countries that have entered into a reciprocal defense procurement memorandum of understanding with the United States.

DATES: *Effective Date:* June 21, 2010.

FOR FURTHER INFORMATION CONTACT: Ms. Amy Williams, 703–602–0310.

SUPPLEMENTARY INFORMATION:

A. Background

DoD published an interim rule in the **Federal Register** on December 18, 2008 (73 FR 76970). The comment period closed on February 17, 2009.

10 U.S.C. 2533a restricts DoD procurement of foreign synthetic fabric or coated synthetic fabric, including textiles, fibers, and yarns for use in such fabrics. Section 807 of the National Defense Authorization Act for Fiscal Year 1999 (Pub. L. 105–261) provides authority for DoD to waive the restriction at 10 U.S.C. 2533a with regard to para-aramid fibers and yarns. On February 12, 1999, the Under Secretary of Defense for Acquisition and Technology (USD(AT&L)) waived the restriction at 10 U.S.C. 2533a for para-aramid fibers and yarns manufactured in the Netherlands. On August 15, 2008, the USD(AT&L) expanded the existing waiver to permit the acquisition of para-aramid fibers and yarns manufactured in any qualifying country listed in DFARS 225.003(10).

The interim rule also clarified the definition of "qualifying countries" at DFARS 225.003 and 252.225–7012 by including a list of the qualifying countries within the definition instead of referring to the list at DFARS 225.872–1.

DoD received comments on the interim rule from nine respondents. Based on public comments, changes were made to the interim rule. The differences between the interim rule and this final rule include—

- Restricting the authority to acquire para-aramid fibers and yarns manufactured in a qualifying country to apply to para-aramid fibers (both staple and continuous) and continuous filament para-aramid yarns, based on a new USD(AT&L) determination and findings, dated November 9, 2009, which contains a five year review requirement.
- Amplifying the definition of "qualifying country" to make clear that these are countries with which DoD has negotiated reciprocal defense procurement memoranda of understanding.

B. Public Comments

The following is a discussion of the comments and the changes included in this final rule as a result of those comments:

1. Limit the Rule to Staple Para-Aramid Fibers and Continuous Filament Para-Aramid Yarns

Two respondents opposed the interim rule acceptance of para-aramid yarns other than continuous filament yarns from any qualifying country (not just the Netherlands) because they believe it will increase competition from yarn producers outside the United States. They do not want the interim rule to apply to "yarns spun from staple para-aramid fibers." They believe the rule should only apply to staple para-aramid fibers and continuous filament para-aramid yarns.

Response: The respondents' rationale is that section 807 says that DoD may only procure articles containing para-aramid fibers and yarns manufactured in a qualifying country if—

- Procuring articles containing para-aramid fibers and yarns manufactured from suppliers in the national technology industrial base (U.S. & Canada) would result in sole source contracts or subcontracts; and
- To do so would not be in the best interests of the Government.

DoD's 1999 Findings of Fact stated that DuPont is the sole manufacturer of para-aramid (continuous and staple) fiber in the United States and Canada. This is a correct statement. Therefore, the request by the respondents to limit this rule to staple para-aramid fiber is unfounded.

However, the Findings also stated that DuPont is the sole producer of para-aramid yarn. DuPont is the sole producer of continuous filament para-aramid yarn, but it does not produce within the U.S. yarns made from staple para-aramid fiber. DoD has now identified 72 yarn producers in the U.S. and Canada, and three of these advertise that they produce yarn products made from DuPont Kevlar. DuPont supplies its Kevlar staple fiber to four major and six minor yarn producers in the U.S. and Canada, and it believes that there are several dozen more companies in Europe who produce yarn of this type.

Therefore, the Under Secretary of Defense (AT&L) issued on November 9, 2009, a revised determination and findings that limits the findings to staple and continuous para-aramid fibers and continuous filament para-aramid yarn. The final rule has been revised accordingly.

2. Review in Five Years To Establish Continued National Defense Need

One respondent commented that this exception should be reviewed in five years and extended only if needed for national defense purposes. Another respondent notes that DuPont is in the process of building a new plant in South Carolina and that this would boost the availability of these products in the U.S.

Response: DoD concurs. The request from industry that precipitated the USD (AT&L)'s determination to waive the restriction for all qualifying countries was based on DoD's immediate and increasing need for ballistic strength fiber in support of MRAP, ballistic armor, and other defense requirements in support of the Global War on Terror. It is reasonable to assume that this need will continue for at least five years, but a review at that time is a good idea. This requirement has been included in the new determination and findings.

3. Detrimental to U.S. Manufacturing Base

Several respondents opposed this rule on the basis that it would be detrimental to the U.S. textile manufacturing base.

One respondent was concerned about negative impact on spinners, knitters, weavers, finishers, and garment makers in the supply chain. Another respondent expressed concern over more foreign imports, when the jobs are so desperately needed in our own country (see also discussion of Regulatory Flexibility at paragraph 6). A third respondent referred to detrimental impact on the textile manufacturing base. He cited the exodus of textile manufacturing from the United States for decades and stated that the textile manufacturing that remains has moved into high performance and niche specialty areas. This respondent stated that by allowing items containing these fibers and the importation of yarns to move forward will continue to erode the U.S. textile manufacturing base.

Response: There are only two companies in the United States or a qualifying country that make para-aramid fibers and continuous filament para-aramid yarns: DuPont™ which makes Kevlar®, and the Teijin Group which makes Twaron. DuPont™ is the sole producer of these items in the United States. Therefore, this rule, when amended to exclude yarn produced from staple para-aramid fibers, will not deprive any U.S. companies of business.

The concern for the well-being of the textile industry, including knitters, weavers, finishers, and garment makers, is misplaced. This rule does not allow acquisition of items containing para-aramid fibers and continuous filament yarns from qualifying countries, but only the fibers and yarns (see DFARS 225.7002–2(m)).

4. Domestic Para-Aramid Sewing Thread May Be of Lower Quality

One respondent fully supported the interim rule and recommended that it should be made permanent. The respondent cited an experience with the specification to use para-aramid thread that was heavier and weaker than the commercial thread that was used in the commercial marketplace, in order to comply with the domestic source restriction.

Response: The Berry Amendment does not require the use of domestic fibers at the expense of satisfactory quality. There is an exception that can be applied if domestic products of a satisfactory quality are not available.

5. Need To Expand the Nations From Which Fiber Can Be Procured

One respondent proposed we add other friendly nations of quality ballistic fiber, such as Japan and India, to the list of nations from which these fibers can be procured.

Response: The authority provided to DoD in section 807 of the National Defense Authorization Act for Fiscal Year 1999 (Pub. L. 105–261) specifically applies only to foreign countries that are a party to a reciprocal defense procurement memorandum of understanding (MOU) entered into under section 2531 of title 10 of the United States Code and that permits United States firms that manufacture para-aramid fibers and yarns to compete with foreign firms for the sale of para-aramid fibers and yarns in that country, as determined by the Secretary of Defense. Section 2531 begins as follows:

(a) *Considerations in Making and Implementing MOUs and Related Agreements.* In the negotiation, renegotiation, and implementation of any existing or proposed memorandum of understanding, or any existing or proposed agreement related to a memorandum of understanding, between the Secretary of Defense, acting on behalf of the United States, and one or more foreign countries (or any instrumentality of a foreign country) relating to research, development, or production of defense equipment, or to the reciprocal procurement of defense items, the Secretary of Defense shall—

(1) Consider the effects of such existing or proposed memorandum of understanding or related agreement on the defense technology and industrial base of the United States; and

(2) Regularly solicit and consider comments and recommendations from the Secretary of Commerce with respect to the commercial implications of such memorandum of understanding or

related agreement and the potential effects of such memorandum of understanding or related agreement on the international competitive position of United States industry.

Under the authority of 10 U.S.C. 2531, DoD has negotiated reciprocal defense procurement (RDP) MOUs with "qualifying" countries. These RDP MOU partners have committed to remove barriers to purchases of supplies produced in the other country or services performed by sources in the other country. The qualifying countries listed at DFARS 225.003(10) are the countries with which DoD has reciprocal defense procurement MOUs. DoD has not negotiated reciprocal defense procurement MOUs with Japan or India.

6. Regulatory Flexibility Analysis

One respondent commented on the statement with regard to regulatory flexibility analysis that small entities normally are not involved in the production of para-aramid fibers and yarns. The respondent stated that there are many small entities involved in the weaving and production of para-aramid fabrics and that it would be devastating to the textile industry to expand the rule to cover the import of woven fabric or finished products.

Response: Since the rule does not cover the import of woven fabric or finished products, but addresses only fibers and yarns, this statement does not affect the requirement for a regulatory flexibility analysis. The reinstated requirement for domestic manufacture of yarn from staple para-aramid fiber removes any possible impact on domestic small entities.

7. Clarify the Definition of "Qualifying Country"

One respondent stated that the interim rule insufficiently defined "qualifying country." Alternate language was provided to expand this definition:

"Qualifying country" means a country with a memorandum of understanding or international agreement with the United States in which both agree to remove barriers to purchases of supplies produced in the other country or services performed by sources of the other country, and the memorandum or agreement complies, where applicable, with the requirements of section 36 of the Arms Export Control Act (22 U.S.C. 2776) and with 10 U.S.C. 2457.

Response: DoD has adopted the expanded definition.

8. Outside Scope of Case

a. One respondent recommends that DoD should also exempt meta-aramid fibers from qualifying countries.

Response: This comment is outside the scope of this case. The law which DoD is implementing only authorizes the exceptions for para-aramid fibers.

b. One respondent has comments regarding other changes to the clause at DFARS 252.212–7001.

Response: These comments relate to DFARS Case 2008–D002 and have been considered under that case.

This rule was subject to Office of Management and Budget review under Executive Order 12866, dated September 30, 1993. This rule is not a major rule under 5 U.S.C. 804.

C. Regulatory Flexibility Act

DoD certifies that this rule will not have a significant economic impact on a substantial number of small entities within the meaning of the Regulatory Flexibility Act, 5 U.S.C. 601, *et seq.,* because there are no small entities in the United States that can produce para-aramid fibers or continuous filament para-aramid yarns. The impact on spinners of para-aramid yarn other than continuous filament yarn has been removed by the change to the final rule.

D. Paperwork Reduction Act

The Paperwork Reduction Act does not apply, because the rule does not impose any information collection requirements that require the approval of the Office of Management and Budget under 44 U.S.C. 3501, *et seq.*

List of Subjects in 48 CFR Parts 225 and 252

Government procurement

Ynette R. Shelkin,

Editor, Defense Acquisition Regulations System.

■ Accordingly, the interim rule amending 48 CFR parts 225 and 252, which was published at 73 FR 76970 on December 18, 2008, is adopted as a final rule with the following changes:

■ 1. The authority citation for 48 CFR parts 225 and 252 continues to read as follows:

Authority: 41 U.S.C. 421 and 48 CFR chapter 1.

PART 225—FOREIGN ACQUISITION

■ 2. Section 225.003 is amended by revising the introductory text of paragraph (10) to read as follows:

225.003 Definitions.

* * * * *

(10) *Qualifying country* means a country with a reciprocal defense procurement memorandum of understanding or international agreement with the United States in which both countries agree to remove barriers to purchases of supplies produced in the other country or services performed by sources of the other country, and the memorandum or agreement complies, where applicable, with the requirements of section 36 of the Arms Export Control Act (22 U.S.C. 2776) and with 10 U.S.C. 2457. Accordingly, the following are qualifying countries:

* * * * *

■ 3. Section 225.7002–2 is amended by revising paragraph (m)(2) to read as follows:

225.7002–2 Exceptions.

* * * * *

(m) * * *

(2) The fibers and yarns are para-aramid fibers and continuous filament para-aramid yarns manufactured in a qualifying country.

* * * * *

PART 252—SOLICITATION PROVISIONS AND CONTRACT CLAUSES

■ 4. Section 252.212–7001 is amended by revising the clause date and revising paragraph (b)(8) to read as follows:

252.212–7001 Contract terms and conditions required to implement statutes or Executive orders applicable to Defense acquisitions of commercial items.

* * * * *

CONTRACT TERMS AND CONDITIONS REQUIRED TO IMPLEMENT STATUTES OR EXECUTIVE ORDERS APPLICABLE TO DEFENSE ACQUISITIONS OF COMMERCIAL ITEMS (JUN 2010)

* * * * *

(b) * * *

(8) _____ 252.225–7012, Preference for Certain Domestic Commodities (JUN 2010) (10 U.S.C. 2533a).

* * * * *

■ 5. Section 252.225–7012 is amended by revising the clause date; revising the introductory text of paragraph (a)(3); and revising paragraph (c)(6)(ii) to read as follows:

252.225–7012 Preference for certain domestic commodities.

* * * * *

PREFERENCE FOR CERTAIN DOMESTIC COMMODITIES (JUN 2010)

(a) * * *

(3) *Qualifying country* means a country with a reciprocal defense procurement memorandum of understanding or international agreement with the United States in which both countries agree to remove barriers to purchases of supplies produced in the other country or services performed by sources of the other country, and the memorandum or agreement complies, where applicable, with the requirements of section 36 of the Arms Export Control Act (22 U.S.C. 2776) and with 10 U.S.C. 2457. Accordingly, the following are qualifying countries:

* * * * *

(c) * * *

(6) * * *

(ii) The fibers and yarns are para-aramid fibers and continuous filament para-aramid yarns manufactured in a qualifying country.

* * * * *

[FR Doc. 2010–14937 Filed 6–18–10; 8:45 am]

BILLING CODE 5001–08–P

DEPARTMENT OF DEFENSE

Defense Acquisition Regulations System

48 CFR Part 239

Defense Federal Acquisition Regulation Supplement; Technical Amendment

AGENCY: Defense Acquisition Regulations System. Department of Defense (DoD).

ACTION: Final rule.

SUMMARY: DoD is issuing a technical amendment to the Defense Federal Acquisition Regulation Supplement (DFARS) to change a DoD Directive number for DoD Directive 8570.01 Information Assurance Training, Certification, and Workforce Management, certified current as of April 23, 2007.

DATES: *Effective Date:* June 21, 2010.

FOR FURTHER INFORMATION CONTACT: Ms. Ynette R. Shelkin, Defense Acquisition Regulations System, OUSD (AT&L) DPAP (DARS), Room 3B855, 3060 Defense Pentagon, Washington, DC 20301–3060. Telephone 703–602–8384; facsimile 703–602–0350.

SUPPLEMENTARY INFORMATION: This final rule amends DFARS text at 239.7102–1(a)(7) by correcting the DoD Directive number from 8570.1 to 8570.01 in a list of current information assurance policies, procedures, and statutes pertaining to information technology.

List of Subjects in 48 CFR Part 239

Government procurement

Ynette R. Shelkin,

Editor, Defense Acquisition Regulations System.

■ Therefore DoD is amending 48 CFR part 239 as follows:

PART 239—ACQUISITION OF INFORMATION TECHNOLOGY

■ 1. The authority citation for 48 CFR part 239 continues to read as follows:

Authority: 41 U.S.C. 421 and 48 CFR chapter 1.

■ 2. In 239.7102–1, revise paragraph (a)(7) to read as follows:

239.7102–1 General.

(a) * * *

(7) DoD Directive 8570.01, Information Assurance Training, Certification, and Workforce Management; and

* * * * *

[FR Doc. 2010–14936 Filed 6–18–10; 8:45 am]

BILLING CODE 5001–08–P

DEPARTMENT OF TRANSPORTATION

National Highway Traffic Safety Administration

49 CFR Part 541

[Docket No. NHTSA–2010–0070]

RIN 2127–AK68

Federal Motor Vehicle Theft Prevention Standard; Final Listing of 2011 Light Duty Truck Lines Subject to the Requirements of This Standard and Exempted Vehicle Lines for Model Year 2011

AGENCY: National Highway Traffic Safety Administration (NHTSA), Department of Transportation.

ACTION: Final rule.

SUMMARY: This final rule announces NHTSA's determination that there are no new model year (MY) 2011 light duty truck lines subject to the parts-marking requirements of the Federal motor vehicle theft prevention standard because they have been determined by the agency to be high-theft or because they have a majority of interchangeable parts with those of a passenger motor vehicle line. This final rule also identifies those vehicle lines that have been granted an exemption from the parts-marking requirements because the vehicles are equipped with antitheft devices determined to meet certain statutory criteria.

DATES: *Effective Date:* The amendment made by this final rule is effective June 21, 2010.

FOR FURTHER INFORMATION CONTACT: Ms. Rosalind Proctor, Consumer Standards Division, Office of International Policy, Fuel Economy and Consumer Programs, NHTSA, West Building, 1200 New Jersey Avenue, SE., (NVS–131, Room W43–302) Washington, DC 20590. Ms. Proctor's telephone number is (202) 366–0846. Her fax number is (202) 493–0073.

SUPPLEMENTARY INFORMATION: The theft prevention standard applies to (1) all passenger car lines; (2) all multipurpose passenger vehicle (MPV) lines with a gross vehicle weight rating (GVWR) of 6,000 pounds or less; (3) low-theft light-duty truck (LDT) lines with a GVWR of 6,000 pounds or less that have major parts that are interchangeable with a majority of the covered major parts of passenger car or MPV lines; and (4) high-theft light-duty truck lines with a GVWR of 6,000 pounds or less.

The purpose of the theft prevention standard (49 CFR Part 541) is to reduce the incidence of motor vehicle theft by facilitating the tracing and recovery of parts from stolen vehicles. The standard seeks to facilitate such tracing by requiring that vehicle identification numbers (VINs), VIN derivative numbers, or other symbols be placed on major component vehicle parts. The theft prevention standard requires motor vehicle manufacturers to inscribe or affix VINs onto covered original equipment major component parts, and to inscribe or affix a symbol identifying the manufacturer and a common symbol identifying the replacement component parts for those original equipment parts, on all vehicle lines subject to the requirements of the standard.

Section 33104(d) provides that once a line has become subject to the theft prevention standard, the line remains subject to the requirements of the standard unless it is exempted under § 33106. Section 33106 provides that a manufacturer may petition annually to have one vehicle line exempted from the requirements of § 33104, if the line is equipped with an antitheft device meeting certain conditions as standard equipment. The exemption is granted if NHTSA determines that the antitheft device is likely to be as effective as compliance with the theft prevention standard in reducing and deterring motor vehicle thefts.

The agency annually publishes the names of those LDT lines that have been determined to be high theft pursuant to 49 CFR Part 541, those LDT lines that have been determined to have major

parts that are interchangeable with a majority of the covered major parts of passenger car or MPV lines and those vehicle lines that are exempted from the theft prevention standard under section 33104. Appendix A to Part 541 identifies those LDT lines that are or will be subject to the theft prevention standard beginning in a given model year. Appendix A–I to Part 541 identifies those vehicle lines that are or have been exempted from the theft prevention standard.

For MY 2011, there are no new LDT lines that will be subject to the theft prevention standard in accordance with the procedures published in 49 CFR Part 542. Therefore, Appendix A does not need to be amended.

For MY 2011, the list of lines that have been exempted by the agency from the parts-marking requirements of Part 541 is amended to include twelve vehicle lines newly exempted in full. The twelve exempted vehicle lines are the Cadillac CTS, Ford Explorer, Hyundai VI, Jeep Patriot, Mazda2, Mercedes-Benz SL–Class Chassis Line, Mitsubishi Outlander, Nissan Cube, Saab 9–5, Subaru Legacy, Toyota Camry and Volkswagen Tiguan.

Subsequent to publishing the MY 2009 and 2010 list of exempted lines, the agency also granted Hyundai-Kia America Technical Center, Inc., a full exemption from the parts-marking requirement of the Theft Prevention Standard for the Kia Amanti vehicle line beginning with MY 2009. After considering the available information in the specific context of eligibility for parts-marking exemptions, the agency concluded that there was sufficient separation between Hyundai and Kia operations to treat them as two separate manufacturers.

We note that the agency removes from the list being published in the **Federal Register** each year certain vehicles lines that have been discontinued more than 5 years ago. Therefore, the Infiniti Q45 and Jaguar XK have been removed from the Appendix A–I listing. The agency will continue to maintain a comprehensive database of all exemptions on our Web site. However, we believe that re-publishing a list containing vehicle lines that have not been in production for a considerable period of time is unnecessary.

The vehicle lines listed as being exempt from the standard have previously been exempted in accordance with the procedures of 49 CFR Part 543 and 49 U.S.C. 33106. Therefore, NHTSA finds for good cause that notice and opportunity for comment on these listings are unnecessary. Further, public comment on the listing of selections and exemptions is not contemplated by 49 U.S.C. Chapter 331. For the same reasons, since this revised listing only informs the public of previous agency actions and does not impose additional obligations on any party, NHTSA finds for good cause that the amendment made by this notice should be effective as soon as it is published in the **Federal Register**.

Regulatory Impacts

A. Executive Order 12866 and DOT Regulatory Policies and Procedures

Executive Order 12866, "Regulatory Planning and Review" (58 FR 51735, October 4, 1993), provides for making determinations whether a regulatory action is "significant" and therefore subject to Office of Management and Budget (OMB) review and to the requirements of the Executive Order. The Order defines a "significant regulatory action" as one that is likely to result in a rule that may:

(1) Have an annual effect on the economy of $100 million or more or adversely affect in a material way the economy, a sector of the economy, productivity, competition, jobs, the environment, public health or safety, or State, local, or Tribal governments or communities;

(2) Create a serious inconsistency or otherwise interfere with an action taken or planned by another agency;

(3) Materially alter the budgetary impact of entitlements, grants, user fees, or loan programs or the rights and obligations of recipients thereof; or

(4) Raise novel legal or policy issues arising out of legal mandates, the President's priorities, or the principles set forth in the Executive Order.

This final rule was not reviewed under Executive Order 12866. It is not significant within the meaning of the DOT Regulatory Policies and Procedures. It will not impose any new burdens on vehicle manufacturers. This document informs the public of previously granted exemptions. Since the only purpose of this final rule is to inform the public of previous actions taken by the agency no new costs are burdens will result.

B. Regulatory Flexibility Act

The Regulatory Flexibility Act of 1980 (5 U.S.C. 601 *et seq.*) requires agencies to evaluate the potential effects of their rules on small businesses, small organizations and small governmental jurisdictions. I have considered the effects of this rulemaking action under the Regulatory Flexibility Act and certify that it would not have a significant economic impact on a substantial number of small entities. As noted above, the effect of this final rule is only to inform the public of agency's previous actions.

C. National Environmental Policy Act

NHTSA has analyzed this final rule for the purposes of the National Environmental Policy Act. The agency has determined that implementation of this action will not have any significant impact on the quality of the human environment. Accordingly, no environmental assessment is required.

D. Executive Order 13132 (Federalism)

The agency has analyzed this rulemaking in accordance with the principles and criteria contained in Executive Order 13132 and has determined that it does not have sufficient Federal implications to warrant consultation with State and local officials or the preparation of a federalism summary impact statement.

E. Unfunded Mandates Act

The Unfunded Mandates Reform Act of 1995 requires agencies to prepare a written assessment of the costs, benefits and other effects of proposed or final rules that include a Federal mandate likely to result in the expenditure by State, local or Tribal governments, in the aggregate, or by the private sector, of more than $100 million annually ($120.7 million as adjusted annually for inflation with base year of 1995). The assessment may be combined with other assessments, as it is here.

This final rule will not result in expenditures by State, local or Tribal governments or automobile manufacturers and/or their suppliers of more than $120.7 million annually. This document informs the public of previously granted exemptions. Since the only purpose of this final rule is to inform the public of previous actions taken by the agency, no new costs or burdens will result.

F. Executive Order 12988 (Civil Justice Reform)

Pursuant to Executive Order 12988, "Civil Justice Reform",[1] the agency has considered whether this final rule has any retroactive effect. We conclude that it would not have such an effect. In accordance with § 33118 when the Theft Prevention Standard is in effect, a State or political subdivision of a State may not have a different motor vehicle theft prevention standard for a motor vehicle or major replacement part. 49 U.S.C. 33117 provides that judicial review of

[1] *See* 61 FR 4729, February 7, 1996.

this rule may be obtained pursuant to 49 U.S.C. 32909. Section 32909 does not require submission of a petition for reconsideration or other administrative proceedings before parties may file suit in court.

G. Paperwork Reduction Act

The Department of Transportation has not submitted an information collection request to OMB for review and clearance under the Paperwork Reduction Act of 1995 (Pub. L. 104–13, 44 U.S.C. Chapter 35). This rule does not impose any new information collection requirements on manufacturers.

List of Subjects in 49 CFR Part 541

Administrative practice and procedure, Labeling, Motor vehicles, Reporting and recordkeeping requirements.

■ In consideration of the foregoing, 49 CFR Part 541 is amended as follows:

PART 541—[AMENDED]

■ 1. The authority citation for Part 541 continues to read as follows:

Authority: 49 U.S.C. 33101, 33102, 33103, 33104, 33105 and 33106; delegation of authority at 49 CFR 1.50.

■ 2. In Part 541, Appendix A–I is revised to read as follows:

APPENDIX A–I TO PART 541—LINES WITH ANTITHEFT DEVICES WHICH ARE EXEMPTED FROM THE PARTS-MARKING REQUIREMENTS OF THIS STANDARD PURSUANT TO 49 CFR PART 543

Manufacturer	Subject lines
BMW	MINI.
	X5.
	Z4.
	1 Car Line.
	3 Car Line.
	5 Car Line.
	6 Car Line.
	7 Car Line.
Chrysler	300C.
	Jeep Grand Cherokee.
	Jeep Patriot.[1]
	Jeep Wrangler.
	Town and Country MPV.
	Dodge Charger.
	Dodge Challenger.
	Dodge Journey.
	Dodge Magnum (2008).
Ford Motor Co	Escape.
	Explorer.[1]
	Ford Five-Hundred (2007).
	Ford Focus.
	Lincoln Town Car.
	Mustang.
	Mercury Mariner.
	Mercury Grand Marquis.
	Mercury Sable.

APPENDIX A–I TO PART 541—LINES WITH ANTITHEFT DEVICES WHICH ARE EXEMPTED FROM THE PARTS-MARKING REQUIREMENTS OF THIS STANDARD PURSUANT TO 49 CFR PART 543—Continued

Manufacturer	Subject lines
	Taurus.
	Taurus X.
General Motors	Buick Lucerne.
	Buick LeSabre.
	Buick LaCrosse/Century.
	Buick Park Avenue (1992–2005).
	Buick Regal/Century.
	Cadillac CTS.[1]
	Cadillac DTS/Deville.
	Chevrolet Camaro.
	Chevrolet Cavalier (1997–2005).
	Chevrolet Classic.
	Chevrolet Cobalt.[2]
	Chevrolet Corvette.
	Chevrolet Cruze.
	Chevrolet Equinox.
	Chevrolet Impala/Monte Carlo.
	Chevrolet Malibu/Malibu Maxx.
	GMC Terrain.
	Oldsmobile Alero.
	Oldsmobile Aurora.
	Pontiac Bonneville.
	Pontiac G6.
	Pontiac Grand Am.
	Pontiac Grand Prix.
	Pontiac Sunfire.
	Saturn Aura.
Honda	Acura CL.
	Acura NSX.
	Acura RL.
	Acura TL.
Hyundai	Azera.
	Genesis.
	VI.[1]
Isuzu	Axiom.
Jaguar	XK.
Kia	Amanti.
Mazda	2.[1]
	3.
	5.
	6.
	CX–7.
	CX–9.
	MX–5 Miata.
	Millenia.
Mercedes-Benz	smart USA fortwo.
	SL-Class [1] (the models within this line are):
	SL550.
	SL600.
	SL55.
	SL 63/AMG.
	SL 65/AMG.
	S-Class/CL-Class (the models within this line are):
	S450.
	S500.
	S550.
	S600.
	S55.
	S65.

APPENDIX A–I TO PART 541—LINES WITH ANTITHEFT DEVICES WHICH ARE EXEMPTED FROM THE PARTS-MARKING REQUIREMENTS OF THIS STANDARD PURSUANT TO 49 CFR PART 543—Continued

Manufacturer	Subject lines
	CL500.
	CL600.
	CL55.
	CL65.
	C-Class/CLK-Class (the models within this line are):
	C240.
	C300.
	C350.
	CLK 350.
	CLK 550.
	CLK 63AMG.
	E-Class/CLS Class (the models within this line are):
	E320/E320DT CDi.
	E350/E500/E55.
	CLS500/CLS55.
Mitsubishi	Eclipse.
	Endeavor.
	Galant.
	Lancer.
	Outlander.[1]
Nissan	Altima.
	Cube.[1]
	Maxima.
	Murano.
	Pathfinder.
	Quest.
	Rogue.
	Sentra.
	Versa.
	Infiniti G.[2]
	Infiniti M.[3]
Porsche	911.
	Boxster/Cayman.
	Panamera.
Saab	9–3.
	9–5.[1]
Subaru	Forester.
	Impreza.
	Legacy.[1]
	B9 Tribeca.
	Outback.
Suzuki	XL–7.
Toyota	Camry.[1]
	Lexus ES.
	Lexus GS.
	Lexus LS.
	Lexus SC.
Volkswagen	Audi 5000S.
	Audi A3.
	Audi A4.
	Audi Allroad.
	Audi A6.
	Audi Q5.
	New Beetle.
	Golf/Rabbit/GTI/R32.
	Jetta.
	Passat.
	Tiguan.[1]

[1] Granted an exemption from the parts marking requirements beginning with MY 2011.

[2] Infiniti G models include the G35 and G37 models.

[3] Infiniti M models include the M35, M37, M45 and M56 models.

Issued on: June 14, 2010.

Stephen R. Kratzke,

Associate Administrator for Rulemaking.

[FR Doc. 2010–14840 Filed 6–18–10; 8:45 am]

BILLING CODE 4910–59–P

Proposed Rules

Federal Register
Vol. 75, No. 118
Monday, June 21, 2010

This section of the FEDERAL REGISTER contains notices to the public of the proposed issuance of rules and regulations. The purpose of these notices is to give interested persons an opportunity to participate in the rule making prior to the adoption of the final rules.

DEPARTMENT OF AGRICULTURE

Agricultural Marketing Service

7 CFR Part 984

[Doc. No. AMS–FV–09–0036; FV09–984–4 PR]

Walnuts Grown in California; Changes to the Quality Regulations for Shelled Walnuts

AGENCY: Agricultural Marketing Service, USDA.

ACTION: Proposed rule.

SUMMARY: This rule invites comments on revisions to the quality regulations for shelled walnuts under the Federal marketing order for California walnuts (order). The order regulates the handling of walnuts grown in California and is administered locally by the California Walnut Board (Board). This rule would require inspection and certification of shelled walnut products after manufacturing instead of before manufacturing. It would also establish a process to specify that manufactured products smaller than eight sixty-fourths of an inch in diameter are derived from walnut pieces that have been inspected and certified to U.S. Commercial grade standards. These changes would result in more efficient and cost-effective handler operations, and would certify the final size and grade of all manufactured walnut pieces.

DATES: Comments must be received by July 6, 2010.

ADDRESSES: Interested persons are invited to submit written comments concerning this proposal. Comments must be sent to the Docket Clerk, Marketing Order Administration Branch, Fruit and Vegetable Programs, AMS, USDA, 1400 Independence Avenue, SW., STOP 0237, Washington, DC 20250–0237; *Fax:* (202) 720–8938; or *Internet: http://www.regulations.gov.* All comments should reference the document number and the date and page number of this issue of the **Federal Register** and will be made available for public inspection in the Office of the Docket Clerk during regular business hours, or can be viewed at: *http://www.regulations.gov.* All comments submitted in response to this rule will be included in the record and will be made available to the public. Please be advised that the identity of the individuals or entities submitting the comments will be made public on the Internet at the address provided above.

FOR FURTHER INFORMATION CONTACT: Debbie Wray, Marketing Specialist, or Kurt J. Kimmel, Regional Manager, California Marketing Field Office, Marketing Order Administration Branch, Fruit and Vegetable Programs, AMS, USDA; *Telephone:* (559) 487–5901, *Fax:* (559) 487–5906, or *E-mail: Debbie.Wray@ams.usda.gov* or *Kurt.Kimmel@ams.usda.gov.*

Small businesses may request information on complying with this regulation by contacting Antoinette Carter, Marketing Order Administration Branch, Fruit and Vegetable Programs, AMS, USDA, 1400 Independence Avenue, SW., STOP 0237, Washington, DC 20250–0237; *Telephone:* (202) 720–2491, *Fax:* (202) 720–8938, or *E-mail: Antoinette.Carter@ams.usda.gov.*

SUPPLEMENTARY INFORMATION: This proposed rule is issued under Marketing Order No. 984, as amended (7 CFR part 984), regulating the handling of walnuts grown in California, hereinafter referred to as the "order." The order is effective under the Agricultural Marketing Agreement Act of 1937, as amended (7 U.S.C. 601–674), hereinafter referred to as the "Act."

The Department of Agriculture (USDA) is issuing this rule in conformance with Executive Order 12866.

This proposal has been reviewed under Executive Order 12988, Civil Justice Reform. This rule is not intended to have retroactive effect.

The Act provides that administrative proceedings must be exhausted before parties may file suit in court. Under section 608c(15)(A) of the Act, any handler subject to an order may file with USDA a petition stating that the order, any provision of the order, or any obligation imposed in connection with the order is not in accordance with law and request a modification of the order or to be exempted therefrom. A handler is afforded the opportunity for a hearing on the petition. After the hearing, USDA would rule on the petition. The Act provides that the district court of the United States in any district in which the handler is an inhabitant, or has his or her principal place of business, has jurisdiction to review USDA's ruling on the petition, provided an action is filed not later than 20 days after the date of the entry of the ruling.

This proposal invites comments on revisions to the quality regulations for shelled walnuts to require inspection and certification after chopping or dicing them into smaller pieces (manufacturing) instead of before manufacturing, and to establish a process for specifying that manufactured products smaller than eight sixty-fourths of an inch in diameter are derived from walnut pieces that have been inspected and certified to U.S. Commercial grade standards. This would result in more efficient and cost-effective handler operations and would certify the final size and grade of all manufactured walnut pieces. This proposal was unanimously recommended by the Board at a meeting on September 12, 2008.

Section 984.50(d) of the order provides authority for the Board to recommend to the Secretary additional grade, size, or other quality regulations for California walnuts. Section 984.52 of the order provides that handlers shall not change the form of shelled walnuts unless such walnuts have been certified as merchantable or meet quality regulations established under § 984.50(d).

Currently, all shelled walnuts are inspected and certified before manufacturing by the American Council for Food Safety & Quality (also known as DFA of California and hereinafter referred to as "DFA") to ensure the walnuts meet marketing order requirements for U.S. Commercial grade. Following inspection, walnut pieces may be further manufactured by chopping them into smaller pieces, or "end products." Pieces smaller than eight sixty-fourths of an inch that are accumulated during the manufacturing process are considered a byproduct of this process and are called "meal." Walnut meal is sold into the market for industrial use, such as in commercial bakery products.

Upon passing inspection, an inspection certificate is issued for the

lot of shelled walnuts, and the certificate number follows the walnuts from that lot through the entire manufacturing process. The original inspection certificate number is noted on the certificates that accompany both the end products and the meal derived from the original lot of shelled walnuts. Providing information about the original lot of walnuts from which the end products and meal were derived assures customers that those products were derived from walnuts that meet quality standards under the order.

The inspection certificate specifies the size of the shelled walnut pieces before manufacturing. The size may be stated as "large pieces" or "halves and pieces," and that information is also noted on the certificates that accompany the end products and the meal, although it does not accurately describe the size of the manufactured end product pieces or meal. If a customer requires certification of the size of a finished end product, the handler must obtain a second inspection for that product, which may add expense to the process.

Currently, meal may be co-mingled into one output bin as it is accumulated from the manufacturing of several different lots of shelled walnuts. When this occurs, the certificate number from each original lot of shelled walnuts is transferred to the meal certificate. As a result, the certificate for one output bin of meal may include multiple certificate numbers.

Transferring the inspection certificate number from an original lot of shelled walnuts to various manufactured end products and meal is cumbersome and creates a potential for errors under the current system. Currently, all of a certified lot of shelled walnuts must be manufactured at one time to ensure the certificate number of that lot is properly transferred to the resulting end products and meal. If, at a future date, the end products from the original manufacturing run are remanufactured in order to be cut to a smaller size, the certificate numbers must be transferred from the first manufactured product to the second manufactured product. This additional process of transferring certificate numbers to and from multiple end products is cumbersome and further increases the potential for error.

The Board's Grades and Standards Committee formed a work group in May 2008 to investigate alternatives to the current inspection and certification process of manufactured shelled walnuts. The work group recommended changing the existing process to allow handlers to manufacture shelled walnuts into smaller end products without prior inspection. Instead, handlers would be required to have all end products inspected. The manufactured pieces equal to or larger than eight sixty-fourths of an inch in diameter would be inspected and certified to existing U.S. Commercial grade requirements specified in the United States Standards for Shelled Walnuts (Juglans regia). Each end product that passes inspection would be issued an inspection certificate, which would include the actual size of the end product.

The U.S. Commercial grade requirements do not include standards for walnut meal. Therefore, the meal accumulated during the manufacturing process would not be inspected. Meal collected from multiple manufacturing runs would no longer be co-mingled in one output bin but would remain segregated.

A document also referred to as a "meal certificate" would be issued for the walnut meal accumulated during each manufacturing run. Because the meal most closely resembles the color, freshness, and other characteristics of the smallest end product produced during manufacturing, the meal could be affiliated with that end product. If the end product passes inspection and is certified, the certificate number assigned to that end product would be referenced on the meal certificate. If that end product fails inspection, the meal created during the same manufacturing process would be rejected and disposed of pursuant to the requirements of § 984.64. However, the end product that failed inspection could be reconditioned, re-sampled, and presented again for inspection and certification.

These changes would improve the manufacturing process by eliminating the need for multiple inspections for the same product, and would improve handler efficiencies by eliminating duplicative inventory tracking. Consumers would be better served since each finished end product would be certified to U.S. Commercial grade requirements, and accurate size information for each end product would be provided on the individual inspection certificates. Handlers could continue to assure customers that walnut meal is derived from walnuts that have been inspected and certified. Accordingly, a new § 984.450(c) containing these regulations is proposed to be added to the order's administrative rules and regulations.

This rule would also revise the first sentence in § 984.450(a) regarding the minimum kernel content requirements of inshell walnuts for reserve disposition credit. The sentence incorrectly references requirements for inshell walnuts pursuant to § 984.59(a). The correct reference is § 984.50(a). The sentence would be revised accordingly.

Initial Regulatory Flexibility Analysis

Pursuant to requirements set forth in the Regulatory Flexibility Act (RFA) (5 U.S.C. 601–612), the Agricultural Marketing Service (AMS) has considered the economic impact of this action on small entities. Accordingly, AMS has prepared this initial regulatory flexibility analysis.

The purpose of the RFA is to fit regulatory actions to the scale of business subject to such actions in order that small businesses will not be unduly or disproportionately burdened. Marketing orders issued pursuant to the Act, and the rules issued thereunder, are unique in that they are brought about through group action of essentially small entities acting on their own behalf.

There are currently 58 handlers of California walnuts subject to regulation under the marketing order, and there are approximately 4,500 growers in the production area. Small agricultural service firms are defined by the Small Business Administration (SBA) (13 CFR 121.201) as those having annual receipts of less than $7,000,000, and small agricultural producers are defined as those having annual receipts of less than $750,000.

USDA's National Agricultural Statistics Service (NASS) reports that California walnuts were harvested from a total of 223,000 bearing acres during 2008–09. The average yield for the 2008–09 crop was 1.96 tons per acre, which is higher than the 1.56 tons per acre average for the previous five years. NASS reported the value of the 2008–09 crop at $1,210 per ton, which is lower than the previous five-year average of $1,598 per ton.

At the time of the 2007 Census of Agriculture, which is the most recent information available, approximately 89 percent of California's walnut farms were smaller than 100 acres. Fifty-four percent were between 1 and 15 acres. A 100-acre farm with an average yield of 1.96 tons per acre would have been expected to produce about 196 tons of walnuts during 2008–09. At $1,210 per ton, that farm's production would have had an approximate value of $237,000. Assuming that the majority of California's walnut farms are still smaller than 100 acres, it could be concluded that the majority of the growers had receipts of less than $237,000 in 2008–09. This is well below the SBA threshold of $750,000; thus, the majority of California's walnut growers

would be considered small growers according to SBA's definition.

According to information supplied by the industry, approximately one-half of California's walnut handlers shipped merchantable walnuts valued under $7,000,000 during the 2008–09 marketing year and would therefore be considered small handlers according to the SBA definition. The firm that currently inspects and certifies shelled walnuts before manufacturing would likely be considered a large agricultural business firm.

This rule would amend § 984.450 of the order's administrative rules and regulations by adding a new paragraph (c) that would require inspection and certification of shelled walnuts after manufacturing instead of before manufacturing, and would establish a process for specifying that walnut meal is derived from manufactured walnut pieces that have been inspected and certified to U.S. Commercial grade standards. This would result in more efficient and cost-effective handler operations, and would certify the final size and grade of all manufactured walnut pieces. Authority for these changes are provided in §§ 984.50(d) and 984.52 of the order.

Regarding the impact of the proposed action on affected entities, this rule should not impose any additional costs. It should reduce costs to handlers by streamlining and improving the production process. Handlers would no longer need to track lots of shelled walnuts through the manufacturing process in order to tie those original lots to the manufactured end products and meal. Handlers would be able to more easily manage inventory and production since they would no longer be required to manufacture an entire lot of shelled walnuts at one time in order to transfer the certificate number of the original lot to each end product and the meal. Since handlers would no longer be required to transfer certificate numbers from an entire lot of shelled walnuts to multiple manufactured end products, a portion of a lot could be held for manufacturing or remanufacturing at a later date.

The potential for errors would be reduced under the proposed system because fewer certificate numbers would be transferred. Each end product would have its own certificate number, and the certificate number of the smallest end product would be referenced on the meal certificate for the meal that was accumulated during the same manufacturing process.

Handler costs would also be reduced when customers require manufactured product to be certified to U.S. Commercial grade requirements since this would be automatically provided under the proposed regulations. Under the current system, if a customer requires this type of certification after manufacturing, handlers may pay additional fees if an inspector makes a special trip to perform a second inspection. If a DFA inspector is already onsite at a handler's facility, there is no additional charge for a second inspection. DFA charges $28.00 per hour with a four-hour minimum charge for a special visit to the handler's site, for a minimum total charge of $112 per visit.

While discussing this proposed change, the Board considered lab testing the meal as an alternative to transferring the inspection certificate number of the smallest manufactured end product to the meal. There is no U.S. Commercial grade standard for meal, so it is not currently possible to inspect and certify it as meeting a standard. Quality standards for meal would need to be developed in order to pursue this alternative. In addition, lab testing the meal could increase handler costs. This alternative would also cause a delay in shipping in order to allow time for lab testing, and this could adversely impact marketing efforts. As a result, lab testing of meal was not considered a viable alternative.

This proposed rule would not impose any additional reporting or recordkeeping requirements on either small or large walnut handlers. As with all Federal marketing order programs, reports and forms are periodically reviewed to reduce information requirements and duplication by industry and public sector agencies.

AMS is committed to complying with the E-Government Act, to promote the use of the Internet and other information technologies to provide increased opportunities for citizen access to Government information and services, and for other purposes.

USDA has not identified any relevant Federal rules that duplicate, overlap or conflict with this proposed rule.

In addition, the Board's meeting on September 12, 2008, when this action was considered, was widely publicized throughout the walnut industry. This issue was also deliberated at a Grades and Standards Committee meeting on May 20, 2008; a Board meeting on May 28, 2008; and a Grades and Standards Committee work group meeting on September 2, 2008. Like all Board meetings, these meetings were public meetings, and all interested persons were invited to attend the meetings and participate in deliberations on all issues. Finally, interested persons are invited to submit comments on this proposed rule, including the regulatory and informational impacts of this action on small businesses.

A small business guide on complying with fruit, vegetable, and specialty crop marketing agreements and orders may be viewed at: *http://www.ams.usda.gov/AMSv1.0/ams.fetchTemplateData.do?template=TemplateN&page=MarketingOrdersSmallBusinessGuide.* Any questions about the compliance guide should be sent to Antoinette Carter at the previously mentioned address in the **FOR FURTHER INFORMATION CONTACT** section.

A 15-day comment period is provided to allow interested persons to respond to this proposal. Fifteen days is deemed appropriate because the proposed changes would improve handler and program operations and, as such, should be available as soon as possible during the marketing year, if adopted. All written comments timely received will be considered before a final determination is made on this matter.

List of Subjects in 7 CFR Part 984

Marketing agreements, Nuts, Reporting and recordkeeping requirements, Walnuts.

For the reasons set forth in the preamble, 7 CFR part 984 is proposed to be amended as follows:

PART 984—WALNUTS GROWN IN CALIFORNIA

1. The authority citation for 7 CFR part 984 continues to read as follows:

Authority: 7 U.S.C. 601–674.

§ 984.450 [Amended]

2. Section 984.450 is amended by revising the first sentence in paragraph (a) and adding a new paragraph (c) to read as follows:

§ 984.450 Grade and size regulations.

(a) *Minimum kernel content requirements for inshell walnuts for reserve disposition credit.* For purposes of §§ 984.54 and 984.56, no lot of inshell walnuts may be held, exported, or disposed of for use by governmental agencies or charitable institutions unless it meets the minimum requirements for merchantable inshell walnuts effective pursuant to § 984.50(a). * * *

* * * * *

(c) Inspection and certification of shelled walnuts that are manufactured into products. For purposes of §§ 984.50(d) and 984.52(c), shelled walnuts may be cut or diced without prior inspection and certification: *Provided,* That the end product, except for walnut meal, is inspected and

certified. For purposes of this section, *end product* shall be defined as walnut pieces equal to or larger than eight sixty-fourths of an inch in diameter. *Walnut meal* shall be defined as walnut pieces smaller than eight sixty-fourths of an inch in diameter.

(1) *End product.* End product must be sized, inspected and certified, and the size must be noted on the inspection certificate. The end product quality must be equal to or better than the minimum requirements of U.S. Commercial grade as defined in the United States Standards for Shelled Walnuts (Juglans regia).

(2) *Walnut meal.* Walnut meal that is accumulated during the cutting or dicing of shelled walnuts to create end product must be presented with the smallest end product from that manufacturing run that is inspected and certified. If the end product meets the applicable U.S. Commercial grade requirements, the walnut meal accumulated during the manufacture of that end product shall be identified and referenced on a separate meal certificate as "meal derived from walnut pieces that meet U.S. Commercial grade requirements." The certificate number of the smallest end product will be referenced on the meal certificate.

(3) *Failed lots.* If the end product fails to meet applicable U.S. Commercial grade requirements, the end product may be reconditioned, re-sampled, inspected again, and certified. However, the walnut meal accumulated during the manufacture of that end product shall be rejected and disposed of pursuant to the requirements of § 984.64.

Dated: June 11, 2010.

Rayne Pegg,

Administrator, Agricultural Marketing Service.

[FR Doc. 2010–14845 Filed 6–18–10; 8:45 am]

BILLING CODE P

DEPARTMENT OF TRANSPORTATION

Federal Aviation Administration

14 CFR Part 21

Existence of Proposed Airworthiness Design Standards for Acceptance Under the Primary Category Rule; Orlando Helicopter Airways (OHA), Inc., Models Cessna 172I, 172K, 172L, and 172M

AGENCY: Federal Aviation Administration (FAA), DOT.

ACTION: Request for comments.

SUMMARY: This notice announces the existence of and requests comments on the proposed airworthiness design standards for acceptance of the OHA, Inc., Models Cessna 172I, 172K, 172L, and 172M airplanes under the regulations for primary category aircraft.

DATES: Comments must be received on or before July 21, 2010.

ADDRESSES: Send all comments to the Federal Aviation Administration (FAA), Standards Office, Small Airplane Directorate (ACE–111), Aircraft Certification Service, 901 Locust Street, Room 301, Kansas City, MO 64106.

FOR FURTHER INFORMATION CONTACT: Mr. Leslie B. Taylor, Aerospace Engineer, Standards Office (ACE–111), Small Airplane Directorate, Aircraft Certification Service, FAA; telephone number (816) 329–4134, fax number (816) 329–4090, e-mail at *leslie.b.taylor@faa.gov.*

SUPPLEMENTARY INFORMATION: Any person may obtain a copy of this information by contacting the person named above under **FOR FURTHER INFORMATION CONTACT**.

Comments Invited

We invite interested parties to submit comments on the proposed airworthiness standards to the address specified above. Commenters must identify the OHA Models Cessna 172I, 172K, 172L, and 172M and submit comments to the address specified above. The FAA will consider all communications received on or before the closing date before issuing the final acceptance. The proposed airworthiness design standards and comments received may be inspected at the FAA, Small Airplane Directorate, Aircraft Certification Service, Standards Office (ACE–110), 901 Locust Street, Room 301, Kansas City, MO 64106, between the hours of 7:30 a.m. and 4 p.m. weekdays, except Federal holidays.

Background

The "primary" category for aircraft was created specifically for the simple, low performance personal aircraft. Section 21.17(f) provides a means for applicants to propose airworthiness standards for their particular primary category aircraft. The FAA procedure establishing appropriate airworthiness standards includes reviewing and possibly revising the applicant's proposal, publication of the submittal in the **Federal Register** for public review and comment, and addressing the comments. After all necessary revisions, the standards are published as approved FAA airworthiness standards.

Accordingly, the applicant, OHA, Inc., has submitted a request to the FAA to include the following:

Proposed Airworthiness Standards for Acceptance Under the Primary Category Rule

For All Airplane Modifications and the Powerplant Installation

Part 3 of the Civil Air regulations (CAR 3), effective November 1, 1949, as amended by 3–1 through 3–12, except for § 3.415, Engines and § 3.416(a), Propellers; and 14 CFR part 23, §§ 23.603, 23.863, 23.907, 23.961, 23.1322 and 23.1359 (latest amendments through Amendment 23–59) as applicable to these airplanes.

For Engine Assembly Certification

Joint Aviation Requirements 22 (JAR 22), "Sailplanes and Powered Sailplanes," Change 5, dated October 28, 1995, Subpart H only.

For Propeller Certification

14 CFR part 35 as amended through 35–8 except § 35.1 (or a propeller with an FAA type certificate may be used).

For Noise Standards

14 CFR part 36, Amendment 36–28, Appendix G.

Issued in Kansas City, Missouri, on June 14, 2010.

Sandra J. Campbell,

Acting Manager, Small Airplane Directorate, Aircraft Certification Service.

[FR Doc. 2010–14975 Filed 6–18–10; 8:45 am]

BILLING CODE 4910–13–P

DEPARTMENT OF TRANSPORTATION

Federal Aviation Administration

14 CFR Part 39

[Docket No. FAA–2010–0463; Directorate Identifier 2010–CE–021–AD]

RIN 2120–AA64

Airworthiness Directives; GA 8 Airvan (Pty) Ltd Models GA8 and GA8–TC320 Airplanes

AGENCY: Federal Aviation Administration (FAA), Department of Transportation (DOT).

ACTION: Notice of proposed rulemaking (NPRM).

SUMMARY: We propose to adopt a new airworthiness directive (AD) for the products listed above that would revise an existing AD. This proposed AD results from mandatory continuing airworthiness information (MCAI) originated by an aviation authority of another country to identify and correct an unsafe condition on an aviation product. The MCAI describes the unsafe condition as: Inspection of a high time

aircraft has revealed cracks in the Horizontal Stabilizer rear spar splice plate and inboard main ribs around the area of the Horizontal Stabilizer rear pivot attachment. Additionally, failure of some attach bolts in service may be due to improper assembly. This amendment is issued to include an applicability matrix (Table 1, page 2) in the compliance section of the service bulletin for improved clarity. The proposed AD would require actions that are intended to address the unsafe condition described in the MCAI.

DATES: We must receive comments on this proposed AD by August 5, 2010.

ADDRESSES: You may send comments by any of the following methods:

- *Federal eRulemaking Portal:* Go to *http://www.regulations.gov.* Follow the instructions for submitting comments.
- *Fax:* (202) 493–2251.
- *Mail:* U.S. Department of Transportation, Docket Operations, M–30, West Building Ground Floor, Room W12–140, 1200 New Jersey Avenue, SE., Washington, DC 20590.
- *Hand Delivery:* U.S. Department of Transportation, Docket Operations, M–30, West Building Ground Floor, Room W12–140, 1200 New Jersey Avenue, SE., Washington, DC 20590, between 9 a.m. and 5 p.m., Monday through Friday, except Federal holidays.

Examining the AD Docket

You may examine the AD docket on the Internet at *http://www.regulations.gov;* or in person at the Docket Management Facility between 9 a.m. and 5 p.m., Monday through Friday, except Federal holidays. The AD docket contains this proposed AD, the regulatory evaluation, any comments received, and other information. The street address for the Docket Office (telephone (800) 647–5527) is in the **ADDRESSES** section. Comments will be available in the AD docket shortly after receipt.

FOR FURTHER INFORMATION CONTACT: Doug Rudolph, Aerospace Engineer, FAA, Small Airplane Directorate, 901 Locust, Room 301, Kansas City, Missouri 64106; *telephone:* (816) 329–4059; *fax:* (816) 329–4090.

SUPPLEMENTARY INFORMATION:

Comments Invited

We invite you to send any written relevant data, views, or arguments about this proposed AD. Send your comments to an address listed under the **ADDRESSES** section. Include "Docket No. FAA–2010–0463; Directorate Identifier 2010–CE–021–AD" at the beginning of your comments. We specifically invite comments on the overall regulatory, economic, environmental, and energy aspects of this proposed AD. We will consider all comments received by the closing date and may amend this proposed AD because of those comments.

We will post all comments we receive, without change, to *http://regulations.gov,* including any personal information you provide. We will also post a report summarizing each substantive verbal contact we receive about this proposed AD.

Discussion

On April 20, 2010, we issued AD 2010–10–01, Amendment 39–16280 (75 FR 23577, May 4, 2010). That AD required actions intended to address an unsafe condition on the products listed above.

Since we issued AD 2010–10–01, the foreign authority has issued an amendment to include an applicability matrix in the compliance section of the manufacturer's service bulletin for improved clarity. The FAA is proposing to revise this AD to allow the use of issue 6 or issue 5 of the service bulletin. An operator would be in compliance if the operator chose to only accomplish issue 5 of the SB. This proposed revision of the FAA's AD will make the FAA AD more in line with the latest version of the received MCAI.

The Civil Aviation Safety Authority (CASA), which is the aviation authority for Australia, has issued AD/GA8/5, Amdt 4, dated May 11, 2010 (referred to after this as "the MCAI"), to correct an unsafe condition for the specified products. The MCAI states:

> Inspection of a high time aircraft has revealed cracks in the Horizontal Stabilizer rear spar splice plate and inboard main ribs around the area of the Horizontal Stabilizer rear pivot attachment. Additionally, failure of some attach bolts in service may be due to improper assembly.
>
> This amendment is issued to include an applicability matrix (Table 1, page 2) in the compliance section of the service bulletin for improved clarity.
>
> The previous amendment included reference to the GA8–TC 320 variant in the applicability section.
>
> Amendment 2 was issued because the requirement document now contains an inspection for cracking in horizontal stabilizers which have load transferring fittings installed.
>
> Previous amendments of this AD listed the AD requirements in full. Due to the extensive use of diagrams and photographs, it is no longer appropriate or practical to write the requirements of the service bulletin out in full in this AD. All requirements, accomplishment instructions and illustrations are contained in the service bulletin.

You may obtain further information by examining the MCAI in the AD docket.

Relevant Service Information

Gippsland Aeronautics has issued Mandatory Service Bulletin SB–GA8–2002–02, Issue 6, dated April 21, 2010. The actions described in this service information are intended to correct the unsafe condition identified in the MCAI.

FAA's Determination and Requirements of the Proposed AD

This product has been approved by the aviation authority of another country, and is approved for operation in the United States. Pursuant to our bilateral agreement with this State of Design Authority, they have notified us of the unsafe condition described in the MCAI and service information referenced above. We are proposing this AD because we evaluated all information and determined the unsafe condition exists and is likely to exist or develop on other products of the same type design.

Differences Between This Proposed AD and the MCAI or Service Information

We have reviewed the MCAI and related service information and, in general, agree with their substance. But we might have found it necessary to use different words from those in the MCAI to ensure the AD is clear for U.S. operators and is enforceable. In making these changes, we do not intend to differ substantively from the information provided in the MCAI and related service information.

We might also have proposed different actions in this AD from those in the MCAI in order to follow FAA policies. Any such differences are highlighted in a Note within the proposed AD.

Costs of Compliance

We estimate that this proposed AD will affect 25 products of U.S. registry. We also estimate that it would take about 1 work-hour per product to comply with the basic requirements of this proposed AD. The average labor rate is $85 per work-hour. Required parts would cost about $0 per product.

Based on these figures, we estimate the cost of the proposed AD on U.S. operators to be $2,125, or $85 per product.

In addition, we estimate that any necessary follow-on actions would take about 5 work-hours and require parts costing $200, for a cost of $625 per product. We have no way of determining the number of products that may need these actions.

Authority for This Rulemaking

Title 49 of the United States Code specifies the FAA's authority to issue rules on aviation safety. Subtitle I, section 106, describes the authority of the FAA Administrator. "Subtitle VII: Aviation Programs," describes in more detail the scope of the Agency's authority.

We are issuing this rulemaking under the authority described in "Subtitle VII, Part A, Subpart III, Section 44701: General requirements." Under that section, Congress charges the FAA with promoting safe flight of civil aircraft in air commerce by prescribing regulations for practices, methods, and procedures the Administrator finds necessary for safety in air commerce. This regulation is within the scope of that authority because it addresses an unsafe condition that is likely to exist or develop on products identified in this rulemaking action.

Regulatory Findings

We determined that this proposed AD would not have federalism implications under Executive Order 13132. This proposed AD would not have a substantial direct effect on the States, on the relationship between the national Government and the States, or on the distribution of power and responsibilities among the various levels of government.

For the reasons discussed above, I certify this proposed regulation:

1. Is not a "significant regulatory action" under Executive Order 12866;

2. Is not a "significant rule" under the DOT Regulatory Policies and Procedures (44 FR 11034, February 26, 1979); and

3. Will not have a significant economic impact, positive or negative, on a substantial number of small entities under the criteria of the Regulatory Flexibility Act.

We prepared a regulatory evaluation of the estimated costs to comply with this proposed AD and placed it in the AD docket.

List of Subjects in 14 CFR Part 39

Air transportation, Aircraft, Aviation safety, Incorporation by reference, Safety.

The Proposed Amendment

Accordingly, under the authority delegated to me by the Administrator, the FAA proposes to amend 14 CFR part 39 as follows:

PART 39—AIRWORTHINESS DIRECTIVES

1. The authority citation for part 39 continues to read as follows:

Authority: 49 U.S.C. 106(g), 40113, 44701.

§ 39.13 [Amended]

2. The FAA amends § 39.13 by removing Amendment 39–16280 (75 FR 23577, May 4, 2010), and adding the following new AD:

GA 8 Airvan (Pty) Ltd.: Docket No. FAA–2010–0463; Directorate Identifier 2010–CE–021–AD.

Comments Due Date

(a) We must receive comments by August 5, 2010.

Affected ADs

(b) This AD revises AD 2010–10–01, Amendment 39–16280.

Applicability

(c) This AD applies to the following model and serial number airplanes, certificated in any category:

(1) *Group 1 Airplanes* (retains the actions and applicability from AD 2009–05–01): Model GA8 airplanes, serial numbers GA8–00–004 and up; and

(2) *Group 2 Airplanes:* Model GA8–TC320 airplanes, all serial numbers.

Subject

(d) Air Transport Association of America (ATA) Code 55: Stabilizers.

Reason

(e) The mandatory continuing airworthiness information (MCAI) states:

Inspection of a high time aircraft has revealed cracks in the Horizontal Stabiliser rear spar splice plate and inboard main ribs around the area of the Horizontal Stabiliser rear pivot attachment. Additionally, failure of some attach bolts in service may be due to improper assembly.

This amendment is issued to include an applicability matrix (Table 1, page 2) in the compliance section of the service bulletin for improved clarity.

The previous amendment included reference to the GA8–TC 320 variant in the applicability section.

Amendment 2 was issued because the requirement document now contains an inspection for cracking in horizontal stabilisers which have load transferring fittings installed.

Previous amendments of this AD listed the AD requirements in full. Due to the extensive use of diagrams and photographs, it is no longer appropriate or practical to write the requirements of the service bulletin out in full in this AD. All requirements, accomplishment instructions and illustrations are contained in the service bulletin.

The FAA is revising AD 2010–10–01 to allow the use of issue 6 or issue 5 of the service bulletin. An operator is in compliance if the operator chooses to only accomplish issue 5 of the SB. This proposed revision of the FAA's AD will make the FAA AD more consistent with the latest version of the MCAI.

Actions and Compliance

(f) *For Group 1 Airplanes:* Unless already done, do the following actions:

(1) Within the next 10 hours time-in-service (TIS) after March 2, 2009 (the effective date retained from AD 2009–05–01):

(i) For all aircraft not incorporating computer numeric control (CNC) machined elevator hinges, inspect and repair the left and right horizontal stabilizer rear pivot attachment installation following instruction "3. Rear Pivot Attachment Inspection," of Gippsland Aeronautics Mandatory Service Bulletin SB–GA8–2002–02, Issue 5, dated November 13, 2008; or Gippsland Aeronautics Mandatory Service Bulletin SB–GA8–2002–02, Issue 6, dated April 21, 2010; and,

(ii) For all aircraft, inspect the left and right rear attach bolt mating surfaces for damage or an out of square condition and replace the left and right rear attach bolts following instruction "5. Rear Attach Bolt Replacement," of Gippsland Aeronautics Mandatory Service Bulletin SB–GA8–2002–02, Issue 5, dated November 13, 2008; or Gippsland Aeronautics Mandatory Service Bulletin SB–GA8–2002–02, Issue 6, dated April 21, 2010. Reworking the mating surfaces by spotfacing is no longer acceptable. If the mating surfaces are damaged, not square, or were previously reworked by spotfacing the surface, replace the parts as specified in Gippsland Aeronautics Mandatory Service Bulletin SB–GA8–2002–02, Issue 5, dated November 13, 2008; or Gippsland Aeronautics Mandatory Service Bulletin SB–GA8–2002–02, Issue 6, dated April 21, 2010.

(2) Within the next 10 hours TIS after March 2, 2009 (the effective date retained from AD 2009–05–01) and repetitively thereafter at intervals not to exceed 100 hours TIS or 12 months, whichever occurs first, for all aircraft:

(i) Inspect the horizontal stabilizer externally following instruction "2. External Inspection (Lower flange, Stabilizer rear spar)," of Gippsland Aeronautics Mandatory Service Bulletin SB–GA8–2002–02, Issue 5, dated November 13, 2008; or Gippsland Aeronautics Mandatory Service Bulletin SB–GA8–2002–02, Issue 6, dated April 21, 2010; and

(ii) Inspect the horizontal stabilizer internally following instruction "4. Internal Inspection," of Gippsland Aeronautics Mandatory Service Bulletin SB–GA8–2002–02, Issue 5, dated November 13, 2008; or Gippsland Aeronautics Mandatory Service Bulletin SB–GA8–2002–02, Issue 6, dated April 21, 2010.

(3) If during the inspection required by paragraph (f)(2) of this AD any excessive local deflection or movement of the lower skin surrounding the lower pivot attachment, cracking, or working (loose) rivet is found, before further flight, obtain an FAA-approved repair scheme from the manufacturer and incorporate this repair scheme. Due to FAA policy, the repair scheme/modification for crack damage must include an immediate repair of the crack. The repair scheme cannot be by repetitive inspection only. The repair scheme/modification may incorporate repetitive inspections in addition to the repetitive inspections required in paragraph (f)(2) of this AD. Continued operational flight with un-repaired crack damage is not permitted.

(g) *For Group 2 Airplanes:* Unless already done, do the following actions:

(1) Within the next 10 hours TIS after May 10, 2010 (the effective date retained from AD 2010–10–01):

(i) For all aircraft not incorporating computer numeric control (CNC) machined elevator hinges, inspect and repair the left and right horizontal stabilizer rear pivot attachment installation following instruction "3. Rear Pivot Attachment Inspection," of Gippsland Aeronautics Mandatory Service Bulletin SB–GA8–2002–02, Issue 5, dated November 13, 2008; or Gippsland Aeronautics Mandatory Service Bulletin SB–GA8–2002–02, Issue 6, dated April 21, 2010; and,

(ii) For all aircraft, inspect the left and right rear attach bolt mating surfaces for damage or an out of square condition and replace the left and right rear attach bolts following instruction "5. Rear Attach Bolt Replacement," of Gippsland Aeronautics Mandatory Service Bulletin SB–GA8–2002–02, Issue 5, dated November 13, 2008; or Gippsland Aeronautics Mandatory Service Bulletin SB–GA8–2002–02, Issue 6, dated April 21, 2010. Reworking the mating surfaces by spotfacing is no longer acceptable. If the mating surfaces are damaged, not square, or were previously reworked by spotfacing the surface, before further flight, replace the parts as specified in Gippsland Aeronautics Mandatory Service Bulletin SB–GA8–2002–02, Issue 5, dated November 13, 2008; or Gippsland Aeronautics Mandatory Service Bulletin SB–GA8–2002–02, Issue 6, dated April 21, 2010.

(2) Within the next 10 hours TIS after May 10, 2010 (the effective date retained from AD 2010–10–01) and repetitively thereafter at intervals not to exceed 100 hours TIS or 12 months, whichever occurs first, for all aircraft:

(i) Inspect the horizontal stabilizer externally following instruction "2. External Inspection (Lower flange, Stabilizer rear spar)," of Gippsland Aeronautics Mandatory Service Bulletin SB–GA8–2002–02, Issue 5, dated November 13, 2008; or Gippsland Aeronautics Mandatory Service Bulletin SB–GA8–2002–02, Issue 6, dated April 21, 2010; and

(ii) Inspect the horizontal stabilizer internally following instruction "4. Internal Inspection," of Gippsland Aeronautics Mandatory Service Bulletin SB–GA8–2002–02, Issue 5, dated November 13, 2008; or Gippsland Aeronautics Mandatory Service Bulletin SB–GA8–2002–02, Issue 6, dated April 21, 2010.

(3) If during the inspection required by paragraph (g)(2) of this AD any excessive local deflection or movement of the lower skin surrounding the lower pivot attachment, cracking, or working (loose) rivet is found, before further flight, obtain an FAA-approved repair scheme from the manufacturer and incorporate this repair scheme. Due to FAA policy, the repair scheme/modification for crack damage must include an immediate repair of the crack. The repair scheme cannot be by repetitive inspection only. The repair scheme/modification may incorporate repetitive inspections in addition to the repetitive inspections required in paragraph (g)(2) of this AD. Continued operational flight with un-repaired crack damage is not permitted.

FAA AD Differences

Note: This AD differs from the MCAI and/or service information as follows:

(1) "Requirement: 1. Daily Inspection (Stabilizer attach bolt)" of the service information requires a daily inspection of the stabilizer attach bolt. The daily inspection is not a requirement of this AD. Instead of the daily inspection, we require you to perform, within 10 hours TIS, "Requirement 3. Rear Pivot Attachment Inspection" and "Requirement 5. Rear Attachment Bolt Replacement" of the service information. Compliance with requirement 3. and 5. is a terminating action for the daily inspection, and we are requiring these within 10 hours TIS after the effective date of AD 2009–05–01 for Group 1 airplanes and AD 2010–10–01 for Group 2 airplanes.

(2) "Requirement: 2. External Inspection (Lower flange, Stabilizer rear spar)" of the service information does not specify any action if excessive local deflection or movement of lower skin, cracking, or working (loose) rivet is found. We require obtaining and incorporating an FAA-approved repair scheme from the manufacturer before further flight.

(3) The MCAI does not state if further flight with known cracks is allowed. FAA policy is to not allow further flight with known cracks in critical structure. We require that if any cracks are found when accomplishing the inspection required in paragraphs (f)(2) and (g)(2) of this AD, you must repair the cracks before further flight.

(4) The service information does not state that parts with spotfaced nut and bolt mating surfaces require replacement. However, the service information no longer allows reworking of the mating surfaces by spotfacing. We require that if any nut and bolt surfaces were previously reworked by spotfacing, you must replace the parts.

Other FAA AD Provisions

(h) The following provisions also apply to this AD:

(1) *Alternative Methods of Compliance (AMOCs):* The Manager, Standards Office, FAA, has the authority to approve AMOCs for this AD, if requested using the procedures found in 14 CFR 39.19. Send information to *Attn:* Doug Rudolph, Aerospace Engineer, FAA, Small Airplane Directorate, 901 Locust, Room 301, Kansas City, Missouri 64106; *telephone:* (816) 329–4059; *fax:* (816) 329–4090. Before using any approved AMOC on any airplane to which the AMOC applies, notify your appropriate principal inspector (PI) in the FAA Flight Standards District Office (FSDO), or lacking a PI, your local FSDO.

(2) *Airworthy Product:* For any requirement in this AD to obtain corrective actions from a manufacturer or other source, use these actions if they are FAA-approved. Corrective actions are considered FAA-approved if they are approved by the State of Design Authority (or their delegated agent). You are required to assure the product is airworthy before it is returned to service.

(3) *Reporting Requirements:* For any reporting requirement in this AD, under the provisions of the Paperwork Reduction Act (44 U.S.C. 3501 *et seq.*), the Office of Management and Budget (OMB) has approved the information collection requirements and has assigned OMB Control Number 2120–0056.

Related Information

(i) Refer to MCAI Civil Aviation Safety Authority AD No. AD/GA8/5, Amdt 4, dated May 11, 2010; Gippsland Aeronautics Mandatory Service Bulletin SB–GA8–2002–02, Issue 5, dated November 13, 2008; and Gippsland Aeronautics Mandatory Service Bulletin SB–GA8–2002–02, Issue 6, dated April 21, 2010, for related information.

Issued in Kansas City, Missouri, on June 14, 2010.

Sandra J. Campbell,

Acting Manager, Small Airplane Directorate, Aircraft Certification Service.

[FR Doc. 2010–14986 Filed 6–18–10; 8:45 am]

BILLING CODE 4910–13–P

DEPARTMENT OF TRANSPORTATION

Federal Aviation Administration

14 CFR Part 39

[Docket No. FAA–2010–0632; Directorate Identifier 2010–CE–025–AD]

RIN 2120–AA64

Airworthiness Directives; Robert E. Rust, Jr. Model DeHavilland DH.C1 Chipmunk 21, DH.C1 Chipmunk 22, and DH.C1 Chipmunk 22A Airplanes

AGENCY: Federal Aviation Administration (FAA), Department of Transportation (DOT).

ACTION: Notice of proposed rulemaking (NPRM).

SUMMARY: We propose to adopt a new airworthiness directive (AD) for all Robert E. Rust, Jr. Model DeHavilland DH.C1 Chipmunk 21, DH.C1 Chipmunk 22, and DH.C1 Chipmunk 22A airplanes. This proposed AD would require a one-time inspection of the flap operating system for an unauthorized latch plate design installation. This proposed AD results from a report of a latch plate failing in service that was not made in accordance with the applicable de Havilland drawing. We are proposing this AD to detect and correct unauthorized latch plate design installation, which could result in an un-commanded retraction of the flaps. This failure could lead to a stall during a landing approach.

DATES: We must receive comments on this proposed AD by August 5, 2010.

ADDRESSES: Use one of the following addresses to comment on this proposed AD:

- *Federal eRulemaking Portal:* Go to *http://www.regulations.gov.* Follow the instructions for submitting comments.
- *Fax:* (202) 493–2251.
- *Mail:* U.S. Department of Transportation, Docket Operations, M–30, West Building Ground Floor, Room W12–140, 1200 New Jersey Avenue, SE., Washington, DC 20590.
- *Hand Delivery:* U.S. Department of Transportation, Docket Operations, M–30, West Building Ground Floor, Room W12–140, 1200 New Jersey Avenue, SE., Washington, DC 20590, between 9 a.m. and 5 p.m., Monday through Friday, except Federal holidays.

For service information identified in this proposed AD, contact de Havilland Support Limited, Duxford Airfield, Cambridgeshire, CB22 4QR, England, *phone:* +44 (0) 1223 830090; *fax:* +44 (0) 1223 830085; *e-mail: info@dhsupport.com;* Internet: *http://www.dhsupport.com/.*

FOR FURTHER INFORMATION CONTACT: Carey O'Kelley, Aerospace Engineer, FAA, Atlanta Aircraft Certification Office (ACO), 1701 Columbia Avenue, College Park, Georgia 30337; *telephone:* (404) 474–5543; *fax:* (404) 474–5606.

SUPPLEMENTARY INFORMATION:

Comments Invited

We invite you to send any written relevant data, views, or arguments regarding this proposed AD. Send your comments to an address listed under the **ADDRESSES** section. Include the docket number, "FAA–2010–0632; Directorate Identifier 2010–CE–025–AD" at the beginning of your comments. We specifically invite comments on the overall regulatory, economic, environmental, and energy aspects of the proposed AD. We will consider all comments received by the closing date and may amend the proposed AD in light of those comments.

We will post all comments we receive, without change, to *http://www.regulations.gov,* including any personal information you provide. We will also post a report summarizing each substantive verbal contact we receive concerning this proposed AD.

Discussion

We have received a report of a latch plate supplied under part number (P/N) C1–CF–1489 failing in service on a Model DeHavilland DH.C1 Chipmunk 21, DH.C1 Chipmunk 22, or DH.C1 Chipmunk 22A airplane. The part in question was not manufactured to the de Havilland drawing for P/N C1–CF–1489. The unapproved latch plate was made of a shaft that was pressed into a plate, rather than being machined from bar material as one piece. The shaft and plate on the unapproved part can become separated or bent, resulting in rapid wear and failure of the part.

This condition, if not corrected, could result in an un-commanded retraction of the flaps. This failure could lead to a stall during a landing approach.

Relevant Service Information

We have reviewed de Havilland Support Limited Technical News Sheet (TNS) CT(C1) No 208 Issue 1, dated January 3, 2009. The service information describes procedures for inspecting the flap operating system latch plate for an unapproved part installation.

FAA's Determination and Requirements of the Proposed AD

We are proposing this AD because we evaluated all information and determined the unsafe condition described previously is likely to exist or develop on other products of the same type design. This proposed AD would require a one-time inspection of the flap operating system for an unauthorized latch plate design installation.

Costs of Compliance

We estimate that this proposed AD would affect 64 airplanes in the U.S. registry.

We estimate the following costs to do the proposed inspection:

Labor cost	Parts cost	Total cost per airplane	Total cost on U.S. operators
3 work-hours × $85 per hour = $255	Not Applicable	$255	$16,320

We estimate the following costs to do any necessary replacements that would be required based on the results of the proposed inspection. We have no way of determining the number of airplanes that may need this replacement:

Labor cost	Parts cost	Total cost per airplane
.5 work-hour × $85 per hour = $42.50	$175	$217.50

Authority for This Rulemaking

Title 49 of the United States Code specifies the FAA's authority to issue rules on aviation safety. Subtitle I, Section 106, describes the authority of the FAA Administrator. Subtitle VII, Aviation Programs, describes in more detail the scope of the Agency's authority.

We are issuing this rulemaking under the authority described in Subtitle VII, Part A, Subpart III, Section 44701, "General requirements." Under that section, Congress charges the FAA with promoting safe flight of civil aircraft in air commerce by prescribing regulations for practices, methods, and procedures the Administrator finds necessary for safety in air commerce. This regulation is within the scope of that authority because it addresses an unsafe condition that is likely to exist or develop on products identified in this rulemaking action.

Regulatory Findings

We have determined that this proposed AD would not have federalism implications under Executive Order 13132. This proposed AD would not have a substantial direct effect on the States, on the relationship between the national Government and the States, or on the distribution of power and responsibilities among the various levels of government.

For the reasons discussed above, I certify that the proposed regulation:

1. Is not a "significant regulatory action" under Executive Order 12866;
2. Is not a "significant rule" under the DOT Regulatory Policies and Procedures (44 FR 11034, February 26, 1979); and
3. Will not have a significant economic impact, positive or negative, on a substantial number of small entities under the criteria of the Regulatory Flexibility Act.

We prepared a regulatory evaluation of the estimated costs to comply with this proposed AD and placed it in the AD docket.

Examining the AD Docket

You may examine the AD docket that contains the proposed AD, the regulatory evaluation, any comments received, and other information on the Internet at *http://www.regulations.gov;* or in person at the Docket Management Facility between 9 a.m. and 5 p.m., Monday through Friday, except Federal holidays. The Docket Office (telephone (800) 647–5527) is located at the street address stated in the **ADDRESSES** section. Comments will be available in the AD docket shortly after receipt.

List of Subjects in 14 CFR Part 39

Air transportation, Aircraft, Aviation safety, Incorporation by reference, Safety.

The Proposed Amendment

Accordingly, under the authority delegated to me by the Administrator, the FAA proposes to amend 14 CFR part 39 as follows:

PART 39—AIRWORTHINESS DIRECTIVES

1. The authority citation for part 39 continues to read as follows:

Authority: 49 U.S.C. 106(g), 40113, 44701.

§ 39.13 [Amended]

2. The FAA amends § 39.13 by adding the following new AD:

Robert E. Rust, Jr.: Docket No. FAA–2010–0632; Directorate Identifier 2010–CE–025–AD.

Comments Due Date

(a) We must receive comments on this airworthiness directive (AD) action by August 5, 2010.

Affected ADs

(b) None.

Applicability

(c) This AD applies to Model DeHavilland DH.C1 Chipmunk 21, DH.C1 Chipmunk 22, and DH.C1 Chipmunk 22A airplanes, all serial numbers, that are certificated in any category.

Note: These airplanes are also identified as CHIPMUNK 22A, CHIPMUNK DHC–1T10, CHIPMUNK T.10 MK–22, DH.C1 MK22A, DHC–1, DHC–1 CHIPMUNK, DHC–1 CHIPMUNK 22, DHC–1 SERIES 22, or DHC–1 T.MK. 10.

Subject

(d) Air Transport Association of America (ATA) Code 27: Flight Controls.

Unsafe Condition

(e) This AD results from a report of a latch plate supplied under part number C1–CF–1489 failing in service. The part in question was not manufactured to the applicable de Havilland drawing. The unapproved latch plate was made of a shaft that was pressed into a plate, rather than being machined from bar material as one piece. The shaft and plate on the unapproved part can become separated or bent, resulting in rapid wear and failure of the part. This condition, if not corrected, could result in an un-commanded retraction of the flaps. This failure could lead to a stall during a landing approach.

Compliance

(f) To address this problem, you must do the following, unless already done:

Actions	Compliance	Procedures
(1) Inspect the flap operating system to identify the part number (P/N) of the latch plate installed. If latch plate P/N C1–CF–1489 is installed, inspect the latch plate to determine if it is in compliance with the design standard. An unapproved latch plate P/N C1–CF–1489 is made from two pieces pressed together while one that complies with the design standard is machined in one piece from bar material.	Within 50 hours time-in-service (TIS) after the effective date of this AD or within 90 days after the effective date of this AD, whichever occurs first.	Follow de Havilland Support Limited Technical News Sheet (TNS) CT(C1) No 208 Issue 1, dated January 3, 2009.
(2) If during the inspection required in paragraph (f)(1) of this AD an unapproved latch plate P/N C1–CF–1489 is found, replace the latch plate with a latch plate that complies with the design standard. The following U.S. standard hardware may be substituted for the hardware specified in the service information: (i) 1/16″ diameter cotter pin that is P/N MS24665–153 (or equivalent) in place of split pin P/N SP90/C and; (ii) Washer that is P/N MS15795–806B (or equivalent) in place of washer P/N SP13/B.	Before further flight after the inspection where the unapproved latch plate P/N C1–CF–1849 was found.	Follow de Havilland Support Limited TNS CT(C1) No 208 Issue 1, dated January 3, 2009.

Alternative Methods of Compliance (AMOCs)

(g) The Manager, Atlanta Aircraft Certification Office (ACO), FAA, has the authority to approve AMOCs for this AD, if requested using the procedures found in 14 CFR 39.19. Send information to *Attn:* Carey O'Kelley, Aerospace Engineer, FAA, Atlanta Aircraft Certification Office (ACO), 1701 Columbia Avenue, College Park, Georgia 30337; *telephone:* (404) 474–5543; *fax:* (404) 474–5606. Before using any approved AMOC on any airplane to which the AMOC applies, notify your appropriate principal inspector (PI) in the FAA Flight Standards District Office (FSDO), or lacking a PI, your local FSDO.

Related Information

(h) To get copies of the service information referenced in this AD, contact de Havilland Support Limited, Duxford Airfield, Cambridgeshire, CB22 4QR, England, *phone:* +44 (0) 1223 830090; *fax:* +44 (0) 1223 830085; *e-mail: info@dhsupport.com; Internet: http://www.dhsupport.com/.* To view the AD docket, go to U.S. Department of Transportation, Docket Operations, M–30, West Building Ground Floor, Room W12–140, 1200 New Jersey Avenue, SE., Washington, DC 20590, or on the Internet at *http://www.regulations.gov.*

Issued in Kansas City, Missouri, on June 14, 2010.

Sandra J. Campbell,

Acting Manager, Small Airplane Directorate, Aircraft Certification Service.

[FR Doc. 2010–14989 Filed 6–18–10; 8:45 am]

BILLING CODE 4910–13–P

DEPARTMENT OF ENERGY

Federal Energy Regulatory Commission

18 CFR Part 342

[Docket No. RM10–25–000]

Five-Year Review of Oil Pipeline Pricing Index

June 15, 2010.

AGENCY: Federal Energy Regulatory Commission.

ACTION: Notice of Inquiry.

SUMMARY: The Federal Energy Regulatory Commission (Commission) invites comments on its five-year review of the oil pipeline pricing index established in *Revisions to Oil Pipeline Regulations Pursuant to the Energy Policy Act of 1992,* Order No. 561, FERC Stats. & Regs. [Regs. Preambles, 1991–1996] ¶ 30,985 (1993). Specifically, the Commission proposes to use the Producer Price Index for Finished Goods (PPI) plus 1.3 percent (PPI+1.3) as the index for annual changes to the oil pipeline rate ceiling over the five-year period commencing July 1, 2011. Commenters are invited to submit and justify alternatives to the continued use of PPI+1.3.

DATES: Written comments on this Notice of Inquiry are due on August 20, 2010. Reply comments must be received by the Commission 30 days after the filing date for initial comments.

ADDRESSES: You may submit comments, identified by docket number by any of the following methods:

- *Agency Web Site: http://www.ferc.gov.* Documents created electronically using word processing software should be filed in native applications or print-to-PDF format and not in a scanned format.
- *Mail/Hand Delivery:* Commenters unable to file comments electronically must mail or hand deliver an original and 14 copies of their comments to: Federal Energy Regulatory Commission, Office of the Secretary, 888 First Street, NE., Washington, DC 20426.

FOR FURTHER INFORMATION CONTACT: Michael Lacy (Technical Information), Office of Energy Market Regulation, Federal Energy Regulatory Commission, 888 First Street, NE., Washington, DC 20426, (202) 502–8843; Andrew R. Knudsen (Legal Information), Office of the General Counsel, Federal Energy Regulatory Commission, 888 First Street, NE., Washington, DC 20426, (202) 502–6527.

SUPPLEMENTARY INFORMATION:

Notice of Inquiry

1. In this notice of inquiry (NOI), the Commission invites comments on its intended utilization of the Producer Price Index for Finished Goods (PPI) [1] plus 1.3 percent (PPI+1.3) as the index for determining annual changes to the oil pipeline rate ceiling during the next five years beginning July 1, 2011.[2] The index of PPI+1.3 was previously adopted by the Commission for the five-year period starting July 1, 2006.[3] The Commission proposes to continue to apply the index of PPI+1.3 to an oil pipeline's existing rate ceiling level to determine the rate ceiling level for the next year.[4]

I. Background

2. In Order No. 561, the Commission established an index methodology to regulate changes to oil pipeline rates and adopted an index of PPI minus one percent (PPI–1) as the most appropriate index to track oil pipeline industry cost changes from one year to the next. The Commission also undertook to review every five years the continued effectiveness of its index for tracking changes to oil pipeline industry costs.

3. After its initial five-year review, the Commission adopted PPI, without the (−1) percent adjustment, as the appropriate index for tracking oil pipeline industry costs for the five-year period beginning July 2001.[5] In its second five-year review of the oil pricing index, the Commission adopted an index of PPI+1.3 for the five-year period commencing July 1, 2006.[6]

II. Proposal and Comments

4. The Commission proposes to continue to utilize PPI+1.3 for the next five-year period as the index to track changes to the costs of the oil pipeline industry and to apply to rate ceiling levels for oil pipeline rate changes. The Commission invites interested persons to submit comments on the continued use of PPI+1.3 and to propose, justify, and fully support, any alternative indexing proposals.

III. Comment Procedures

5. The Commission invites interested persons to submit comments on the matters and issues proposed in this notice to be adopted, including any related matters or alternative proposals that commenters may wish to discuss. Comments are due August 20, 2010. Comments must refer to Docket No. RM10–25–000, and must include the commenters' name, the organization they represent, if applicable, and their address.

6. The Commission encourages comments to be filed electronically via the eFiling link on the Commission's Web site at *http://www.ferc.gov.* The Commission accepts most standard word processing formats. Documents created electronically using word processing software should be filed in native applications or print-to-PDF format and not in a scanned format. Commenters filing electronically do not need to make a paper filing.

7. Commenters that are not able to file comments electronically must send an original and 14 copies of their comments to: Federal Energy Regulatory Commission, Office of the Secretary; 888 First Street, NE., Washington, DC 20426.

8. All comments will be placed in the Commission's public files and may be viewed, printed, or downloaded remotely as described in the Document Availability section below. Commenters on this proposal are not required to serve copies of their comments on other commenters.

IV. Document Availability

9. In addition to publishing the full text of this document in the **Federal Register**, the Commission provides all interested persons an opportunity to view and/or print the contents of this document via the Internet through the Commission's Home Page (*http://www.ferc.gov*) and in the Commission's Public Reference Room during normal business hours (8:30 a.m. to 5 p.m. Eastern time) at 888 First Street, NE., Room 2A, Washington, DC 20426.

10. From the Commission's Home Page on the Internet, this information is

---

[1] The PPI represents the Producer Price Index for Finished Goods, also written PPI–FG. The PPI–FG is determined and issued by the Bureau of Labor Statistics, U.S. Department of Labor. Pursuant to 18 C.F.R. section 342.3(d)(2) (2009), "The index will be calculated by dividing the PPI–FG for the calendar year immediately preceding the index year by the previous calendar year's PPI–FG." Multiplying the rate ceiling on June 30 of the index year by the resulting number gives the rate ceiling for the year beginning the next day, July 1.

[2] The five-year review process was established in Order No. 561. *See Revisions to Oil Pipeline Regulations Pursuant to the Energy Policy Energy Policy Act,* FERC Stats. & Regs. [Regs. Preambles, 1991–1996] ¶ 30,985 (1993); *order on reh'g,* Order No. 561–A, FERC Stats. & Regs. [Regs. Preambles, 1991–1996] ¶ 31,000 (1994), *affirmed, Association of Oil Pipelines* v. *FERC,* 83 F.3d 1424 (D.C. Cir. 1996).

[3] *Order Establishing Index for Oil Price Change Ceiling Levels,* 114 FERC ¶ 61,293 (2006).

[4] The Commission publishes the final annual change in the PPI–FG, expressed as a percent, after the final PPI–FG becomes available from the Bureau of Labor Statistics, U.S. Department of Labor in May of each calendar year. Pipelines are required to calculate the new ceiling level applicable to their indexed rates based on this annual change.

[5] *Five-Year Review of Oil Pipeline Pricing Index,* 102 FERC ¶ 61,195 (2003), *affirmed, Flying J Inc., et al.,* v. *FERC,* 363 F.3d 495 (DC Cir. 2004).

[6] *Order Establishing Index for Oil Price Change Ceiling Levels,* 114 FERC ¶ 61,293.

available on eLibrary. The full text of this document is available on eLibrary in PDF and Microsoft Word format for viewing, printing, and/or downloading. To access this document in eLibrary, type the docket number excluding the last three digits of this document in the docket number field.

11. User assistance is available for eLibrary and the Commission's Web site during normal business hours from FERC Online Support at (202) 502–6652 (toll free at 1–866–208–3676) or e-mail at *ferconlinesupport@ferc.gov,* or the Public Reference Room at (202) 502–8371, TTY (202) 502–8659. E-mail the Public Reference Room at *public.referenceroom@ferc.gov.*

By direction of the Commission.

Nathaniel J. Davis, Sr.,

Deputy Secretary.

[FR Doc. 2010–14874 Filed 6–18–10; 8:45 am]

BILLING CODE 6717–01–P

DEPARTMENT OF COMMERCE

International Trade Administration

19 CFR Part 351

[Docket No. 100602237–0250–02]

Import Administration IA ACCESS Pilot Program

AGENCY: Import Administration, International Trade Administration, Department of Commerce.

ACTION: Public notice and request for comments; correction.

SUMMARY: On Tuesday, June 8, 2010, the Department of Commerce (the Department) published the Public Notice and Request for Comments for Import Administration IA ACCESS Pilot Program in the **Federal Register**. The reference to the ITA docket number is incorrect. This document corrects that number. The June 8 document also stated that all comments should refer to RIN 0625–AA84. That RIN number is not applicable to the notice and need not be included in the comments.

FOR FURTHER INFORMATION CONTACT: Evangeline Keenan, Acting APO/Dockets Unit Director, Import Administration, APO/Dockets Unit, Room 1870, U.S. Department of Commerce, Constitution Avenue and 14th Street, NW., Washington, DC 20230; *telephone:* (202) 482–9157.

SUPPLEMENTARY INFORMATION: On Tuesday, June 8, 2010, the Department of Commerce (the Department) published the Public Notice and Request for Comments for Import Administration IA ACCESS Pilot Program in the **Federal Register** at 75 FR 32341. The reference to the Docket No. ITA–2010–XXXX, which is provided to assist the public in submitting comments in Regulations.gov, is incorrect. The Department publishes this notice to correct this number.

Accordingly, in FR Doc. 2010–13733, at page 32341 in the June 8, 2010, issue of the **Federal Register**, under the **ADDRESSES** section in the middle column, correct "Docket No. ITA–2010–XXXX" to read "Docket No. ITA–2010–0002."

Furthermore, in the same paragraph, that notice stated that all comments should refer to RIN 0625–AA84. That RIN number is not applicable to the notice and need not be included in the comments.

Dated: June 15, 2010.

Paul Piquado,

Acting Deputy Assistant Secretary for Import Administration.

[FR Doc. 2010–14940 Filed 6–18–10; 8:45 am]

BILLING CODE 3510–DS–P

DEPARTMENT OF THE INTERIOR

Office of Surface Mining Reclamation and Enforcement

30 CFR Part 938

[PA–155–FOR; OSM 2010–0003]

Pennsylvania Regulatory Program

AGENCY: Office of Surface Mining Reclamation and Enforcement (OSM), Interior.

ACTION: Proposed rule; public comment period and opportunity for public hearing on proposed amendment.

SUMMARY: OSM is announcing receipt of a request (Administrative Record No. 844.14) to remove a required amendment to the Pennsylvania regulatory program (the "Pennsylvania program") under the Surface Mining Control and Reclamation Act of 1977 (SMCRA or the Act). Pennsylvania has provided a rationale that it believes supports the position that the required amendment related to specific information (cessation orders) for permit applications should be removed.

This document gives the times and locations that the Pennsylvania program and this submittal are available for your inspection, the comment period during which you may submit written comments, and the procedures that we will follow for the public hearing, if one is requested.

DATES: We will accept written comments until 4 p.m., *e.s.t.* July 21, 2010. If requested, we will hold a public hearing on July 16, 2010. We will accept requests to speak until 4 p.m., *e.s.t.* on July 6, 2010.

ADDRESSES: You may submit comments, identified by "PA–155–FOR; Docket ID: OSM–2010–0003" by either of the following two methods:

Federal eRulemaking Portal: www.regulations.gov. The proposed rule has been assigned Docket ID: OSM–2010–0003. If you would like to submit comments through the Federal eRulemaking Portal, go to *www.regulations.gov* and follow the instructions.

Mail/Hand Delivery/Courier: Mr. George Rieger, Chief, Pittsburgh Field Division, Office of Surface Mining Reclamation and Enforcement, Harrisburg Transportation Center, 415 Market St., Suite 304, Harrisburg, PA 17101.

Instructions: For detailed instructions on submitting comments and additional information on the rulemaking process, see the "Public Comment Procedures" heading of the **SUPPLEMENTARY INFORMATION** section of this document.

Docket: In addition to obtaining copies of documents at *www.regulations.gov,* information may also be obtained at the addresses listed below during normal business hours, Monday through Friday, excluding holidays. You may receive one free copy of the amendment by contacting OSM's Pittsburgh Field Division Office at:

OSM's Pittsburgh Field Division Office, George Rieger, Chief, Pittsburgh Field Division, Office of Surface Mining Reclamation and Enforcement, Harrisburg Transportation Center, 415 Market St., Suite 304, Harrisburg, Pennsylvania 17101, Telephone (717) 782–4036, *E-mail: grieger@osmre.gov.*

William S. Allen Jr., Acting Director, Bureau of Mining and Reclamation, Pennsylvania Department of Environmental Protection, Rachel Carson State Office Building, P.O. Box 8461, Harrisburg, Pennsylvania 17105–8461, *Telephone:* (717) 787–5015, *E-mail: wallen@state.pa.us.*

FOR FURTHER INFORMATION CONTACT: George Rieger, Telephone: (717) 782–4036. *E-mail: grieger@osmre.gov.*

SUPPLEMENTARY INFORMATION:

I. Background on the Pennsylvania Program
II. Description of the Amendment
III. Public Comment Procedures
IV. Procedural Determinations

I. Background on the Pennsylvania Program

Section 503(a) of the Act permits a State to assume primacy for the regulation of surface coal mining and reclamation operations on non-Federal and non-Indian lands within its borders by demonstrating that its program includes, among other things, "a State law which provides for the regulation of surface coal mining and reclamation operations in accordance with the requirements of this Act * * *; and rules and regulations consistent with regulations issued by the Secretary pursuant to this Act." *See* 30 U.S.C. 1253(a)(1) and (7). On the basis of these criteria, the Secretary of the Interior conditionally approved the Pennsylvania program on July 30, 1982. You can find background information on the Pennsylvania program, including the Secretary's findings, the disposition of comments, and conditions of approval of the Pennsylvania program in the July 30, 1982, **Federal Register** (47 FR 33050). You can also find later actions concerning the Pennsylvania program and program amendments at 30 CFR 938.11, 938.12, 938.13, 938.15 and 938.16.

II. Description of the Amendment

By letter dated March 4, 2010, Pennsylvania sent us a request to remove a required amendment codified at 30 CFR 938.16(bbb) (Administrative Number PA 844.14), under SMCRA (30 U.S.C. 1201 *et seq.*). The required amendment reads as follows:

> By May 1, 1993, Pennsylvania shall submit a proposed amendment to section 86.63(a)(3) to require that all applications for surface mining permits include the specific information required by section 86.63(a)(3)(i)–(viii) for all cessation orders received, by the applicant and anyone linked to the applicant through ownership and control, prior to the date of the application.

Section 86.63 of 25 Pennsylvania Code outlines the compliance information that is required for an application and subsection 86.63(a)(3) reads as follows:

> (3) For a violation of a provision of the acts, or law, rule or regulation of the United States, or of State law, rule or regulation enacted under Federal law, rule or regulation pertaining to air or water environmental protection incurred in connection with a coal mining activity, a list of the violation notices received by the applicant during the 3-year period preceding the application date and a list of the unabated cessation orders and unabated air and water quality violation notices received prior to the date of the application by a coal mining activity owned or controlled by either the applicant or by a person who owns or controls the applicant under the definition of "owned or controlled" or "owns or controls" in section 86.1. The application shall also contain a statement regarding each violation notice including the following:
>
> (i) The identification number of the permit or operation and the MSHA number including the date of issuance of the MSHA number.
>
> (ii) The date of issuance of the violation notice with the Federal or State identification number.
>
> (iii) The name of the issuing regulatory authority, department or agency.
>
> (iv) The name of the person to whom the violation notice was issued.
>
> (v) A brief description of the particular violation.
>
> (vi) The date, location and type of administrative or judicial proceedings initiated concerning the violation.
>
> (vii) The current status of the violation.
>
> (viii) The actions taken by the applicant to abate the violation, and proof which is satisfactory to the regulatory authority, department or agency which has jurisdiction over the violation that the violation has been corrected, or is in the process of being corrected.

Pennsylvania states that under the Pennsylvania program, a cessation order is a type of violation notice. A cessation order is a compliance order that requires cessation of all or part of a mining operation. Pennsylvania manages its enforcement such that all violations are handled through enforcement actions. All enforcement actions are "violation notices" because they are the vehicle through which a violator is notified that there is a violation. In practice, the term "violation notice" in 25 Pa. Code 86.63(a)(3) includes the following enforcement actions: Compliance Orders, Cessation Orders, Failure to Abate Cessation Orders, Permit Suspensions, and Bond Forfeitures.

Pennsylvania manages violation and enforcement data using the eFACTS (Environment, Facility, Application, Compliance Tracking System) database. The practice to include cessation orders along with the other enforcement actions is embedded in the report that is used to verify violation history data.

The regulation at 25 Pa. Code 86.63(a)(3) requires cessation orders to be reported because in practice the term "violation notice" includes cessation orders. Therefore, Pennsylvania is requesting that the required program amendment at 30 CFR 938.16(bbb) be removed. The full text of the program amendment is available for you to read at the locations listed above under **ADDRESSES**.

III. Public Comment Procedures

Under the provisions of 30 CFR 732.17(h), we are seeking your comments on whether the submission satisfies the applicable program approval criteria of 30 CFR 732.15. If we approve the amendment, it will become part of the Pennsylvania program.

Electronic or Written Comments

If you submit written comments, they should be specific, confined to issues pertinent to the proposed regulations, and explain the reason for any recommended change(s). We appreciate any and all comments, but those most useful and likely to influence decisions on the final regulations will be those that either involve personal experience or include citations to and analyses of SMCRA, its legislative history, its implementing regulations, case law, other pertinent Tribal or Federal laws or regulations, technical literature, or other relevant publications. We cannot ensure that comments received after the close of the comment period (see **DATES**) or sent to an address other than those listed above (see **ADDRESSES**) will be included in the docket for this rulemaking and considered.

Public Availability of Comments

Before including your address, phone number, e-mail address, or other personal identifying information in your comment, you should be aware that your entire comment—including your personal identifying information—may be made publicly available at any time. While you may ask us in your comment to withhold your personal identifying information from public review, we cannot guarantee that we will be able to do so. We will not consider anonymous comments.

Public Hearing

If you wish to speak at the public hearing, contact the person listed under **FOR FURTHER INFORMATION CONTACT** by 4 p.m., *e.s.t* July 6, 2010. If you are disabled and need reasonable accommodations to attend a public hearing, contact the person listed under **FOR FURTHER INFORMATION CONTACT.** We will arrange the location and time of the hearing with those persons requesting the hearing. If no one requests an opportunity to speak, we will not hold the hearing.

To assist the transcriber and ensure an accurate record, we request, if possible, that each person who speaks at a public hearing provide us with a written copy of his or her comments. The public hearing will continue on the specified date until everyone scheduled to speak has been given an opportunity to be heard. If you are in the audience and have not been scheduled to speak and wish to do so, you will be allowed to speak after those who have been scheduled. We will end the hearing after everyone scheduled to speak and others

present in the audience who wish to speak, have been heard.

Public Meeting

If there is only limited interest in participating in a public hearing, we may hold a public meeting rather than a public hearing. If you wish to meet with us to discuss the submission, please request a meeting by contacting the person listed under **FOR FURTHER INFORMATION CONTACT**. All such meetings are open to the public and, if possible, we will post notices of meetings at the locations listed under **ADDRESSES**. We will make a written summary of each meeting a part of the administrative record.

IV. Procedural Determinations

Executive Order 12866—Regulatory Planning and Review

This rule is exempted from review by the Office of Management and Budget (OMB) under Executive Order 12866.

Other Laws and Executive Orders Affecting Rulemaking

When a State submits a program amendment to OSM for review, our regulations at 30 CFR 732.17(h) require us to publish a notice in the **Federal Register** indicating receipt of the proposed amendment, its text or a summary of its terms, and an opportunity for public comment. We conclude our review of the proposed amendment after the close of the public comment period and determine whether the amendment should be approved, approved in part, or not approved. At that time, we will also make the determinations and certifications required by the various laws and executive orders governing the rulemaking process and include them in the final rule.

List of Subjects in 30 CFR Part 938

Intergovernmental relations, Surface mining, Underground mining.

Dated: April 28, 2010.

Thomas D. Shope,

Regional Director, Appalachian Region.

[FR Doc. 2010–14868 Filed 6–18–10; 8:45 am]

BILLING CODE 4310–05–P

DEPARTMENT OF THE INTERIOR

Office of Surface Mining Reclamation and Enforcement

30 CFR Part 938

[PA–154–FOR; OSM 2010–0002]

Pennsylvania Regulatory Program

AGENCY: Office of Surface Mining Reclamation and Enforcement (OSM), Interior.

ACTION: Proposed rule; public comment period and opportunity for public hearing on proposed amendment.

SUMMARY: OSM is announcing the receipt of a proposed amendment to the Pennsylvania regulatory program (the "Pennsylvania program") under the Surface Mining Control and Reclamation Act of 1977 (SMCRA or the Act). The proposed amendment (Administrative Record Number PA 837.111) consists of a recent statutory amendment to Pennsylvania's Coal Refuse Disposal Control Act (CRDA), 52 Pennsylvania Statute Section 30.51 *et seq.* Section 4.1(a) of the CRDA was amended by adding subsection (6) to section 4.1(a), which added another category of sites to the list of "preferred sites" currently found in section 4.1.

This document gives the times and locations that the Pennsylvania program and this submittal are available for your inspection, the comment period during which you may submit written comments, and the procedures that we will follow for the public hearing, if one is requested.

DATES: We will accept written comments until 4 p.m., *e.s.t.* July 21, 2010. If requested, we will hold a public hearing on July 16, 2010. We will accept requests to speak until 4 p.m., *e.s.t.* on July 6, 2010.

ADDRESSES: You may submit comments, identified by "PA–154–FOR; Docket ID: OSM–2010–0002" by either of the following two methods:

Federal eRulemaking Portal: www.regulations.gov. The proposed rule has been assigned Docket ID: OSM–2010–0002. If you would like to submit comments through the Federal eRulemaking Portal, go to *www.regulations.gov* and follow the instructions.

Mail/Hand Delivery/Courier: Mr. George Rieger, Chief, Pittsburgh Field Division, Office of Surface Mining Reclamation and Enforcement, Harrisburg Transportation Center, 415 Market St., Suite 304, Harrisburg, PA 17101.

Instructions: For detailed instructions on submitting comments and additional information on the rulemaking process, *see* the "Public Comment Procedures" heading of the **SUPPLEMENTARY INFORMATION** section of this document.

Docket: In addition to obtaining copies of documents at *www.regulations.gov,* information may also be obtained at the addresses listed below during normal business hours, Monday through Friday, excluding holidays. You may receive one free copy of the amendment by contacting OSM's Pittsburgh Field Division Office.

George Rieger, Chief, Pittsburgh Field Division, Office of Surface Mining Reclamation and Enforcement, Harrisburg Transportation Center, 415 Market St., Suite 304, Harrisburg, Pennsylvania 17101, *Telephone* No. (717) 782–4036, *E-mail: grieger@osmre.gov.*

William S. Allen Jr., Acting Director, Bureau of Mining and Reclamation, Pennsylvania Department of Environmental Protection, Rachel Carson State Office Building, P.O. Box 8461, Harrisburg, Pennsylvania 17105–8461, *Telephone:* (717) 787–5015, *E-mail: wallen@state.pa.us.*

FOR FURTHER INFORMATION CONTACT: George Rieger, Telephone: (717) 782–4036. E-mail: *grieger@osmre.gov*

SUPPLEMENTARY INFORMATION:

I. Background on the Pennsylvania Program
II. Description of the Amendment
III. Public Comment Procedures
IV. Procedural Determinations

I. Background on the Pennsylvania Program

Section 503(a) of the Act permits a State to assume primacy for the regulation of surface coal mining and reclamation operations on non-Federal and non-Indian lands within its borders by demonstrating that its program includes, among other things, "a State law which provides for the regulation of surface coal mining and reclamation operations in accordance with the requirements of this Act * * *; and rules and regulations consistent with regulations issued by the Secretary pursuant to this Act." See 30 U.S.C. 1253(a)(1) and (7). On the basis of these criteria, the Secretary of the Interior conditionally approved the Pennsylvania program on July 30, 1982. You can find background information on the Pennsylvania program, including the Secretary's findings, the disposition of comments, and conditions of approval of the Pennsylvania program in the July 30, 1982, **Federal Register** (47 FR 33050). You can also find later actions concerning the Pennsylvania program and program amendments at 30

CFR 938.11, 938.12, 938.13, 938.15, and 938.16.

II. Description of the Amendment

By letter dated February 24, 2010, Pennsylvania sent us an amendment to its program (Administrative Number PA 837.111) under SMCRA (30 U.S.C. 1201 *et seq.*). Pennsylvania sent the amendment to include changes made at its own initiative. The full text of the program amendment is available for you to read at the locations listed above under **ADDRESSES**.

Pennsylvania has proposed a revision (adding subsection (6)) that would add another category of sites to the list of "preferred sites currently found in section 4.1, the site selection provision of the CRDA." *The proposed addition provides as follows:*

Section 4.1. Site Selection

(a) Preferred sites shall be used for coal refuse disposal unless the applicant demonstrates to the department another site is more suitable based upon engineering, geology, economics, transportation systems, and social factors and is not adverse to the public interest. A preferred site is one of the following:

(1) A watershed polluted by acid mine drainage;

(2) A watershed containing an unreclaimed surface mine but which has no mining discharge;

(3) A watershed containing an unreclaimed surface mine with discharges that could be improved by the proposed coal refuse disposal operation;

(4) Unreclaimed coal refuse disposal piles that could be improved by the proposed coal refuse disposal operation;

(5) Other unreclaimed areas previously affected by mining activities;

(6) An area adjacent to or an expansion of an existing coal refuse disposal site.

III. Public Comment Procedures

Under the provisions of 30 CFR 732.17(h), we are seeking your comments on whether the submission satisfies the applicable program approval criteria of 30 CFR 732.15. If we approve the amendment, it will become part of the Pennsylvania program.

Electronic or Written Comments

If you submit written comments, they should be specific, confined to issues pertinent to the proposed regulations, and explain the reason for any recommended change(s). We appreciate any and all comments, but those most useful and likely to influence decisions on the final regulations will be those that either involve personal experience or include citations to and analyses of SMCRA, its legislative history, its implementing regulations, case law, other pertinent Tribal or Federal laws or regulations, technical literature, or other relevant publications. We cannot ensure that comments received after the close of the comment period (*see* **DATES**) or sent to an address other than those listed above (*see* **ADDRESSES**) will be included in the docket for this rulemaking and considered.

Public Availability of Comments

Before including your address, phone number, e-mail address, or other personal identifying information in your comment, you should be aware that your entire comment—including your personal identifying information—may be made publicly available at any time. While you may ask us in your comment to withhold your personal identifying information from public review, we cannot guarantee that we will be able to do so. We will not consider anonymous comments.

Public Hearing

If you wish to speak at the public hearing, contact the person listed under **FOR FURTHER INFORMATION CONTACT** by 4 p.m., *e.s.t.* July 6, 2010. If you are disabled and need special accommodations to attend a public hearing, contact the person listed under **FOR FURTHER INFORMATION CONTACT**. We will arrange the location and time of the hearing with those persons requesting the hearing. If no one requests an opportunity to speak, we will not hold the hearing.

To assist the transcriber and ensure an accurate record, we request, if possible, that each person who speaks at a public hearing provide us with a written copy of his or her comments. The public hearing will continue on the specified date until everyone scheduled to speak has been given an opportunity to be heard. If you are in the audience and have not been scheduled to speak and wish to do so, you will be allowed to speak after those who have been scheduled. We will end the hearing after everyone scheduled to speak and others present in the audience who wish to speak, have been heard.

Public Meeting

If there is only limited interest in participating in a public hearing, we may hold a public meeting rather than a public hearing. If you wish to meet with us to discuss the submission, please request a meeting by contacting the person listed under **FOR FURTHER INFORMATION CONTACT**. All such meetings are open to the public and, if possible, we will post notices of meetings at the locations listed under **ADDRESSES**. We will make a written summary of each meeting a part of the administrative record.

IV. Procedural Determinations

Executive Order 12630—Takings

This rule does not have takings implications. This determination is based on the analysis of the proposed amendment.

Executive Order 12866—Regulatory Planning and Review

This rule is exempted from review by the Office of Management and Budget (OMB) under Executive Order 12866.

Executive Order 12988—Civil Justice Reform

The Department of the Interior has conducted the reviews required by section 3 of Executive Order 12988 and has determined that this rule meets the applicable standards of subsections (a) and (b) of that section. However, these standards are not applicable to the actual language of state regulatory programs and program amendments because each program is drafted and promulgated by a specific state, not by OSM. Under sections 503 and 505 of SMCRA (30 U.S.C. 1253 and 1255) and the Federal regulations at 30 CFR 730.11, 732.15, and 732.17(h)(10), decisions on proposed State regulatory programs and program amendments submitted by the states must be based solely on a determination of whether the submittal is consistent with SMCRA and its implementing Federal regulations and whether the other requirements of 30 CFR parts 730, 731, and 732 have been met.

Executive Order 13132—Federalism

This rule does not have Federalism implications. SMCRA delineates the roles of the Federal and State governments with regard to the regulation of surface coal mining and reclamation operations. One of the purposes of SMCRA is to "establish a nationwide program to protect society and the environment from the adverse effects of surface coal mining operations." Section 503(a)(1) of SMCRA requires that State laws regulating surface coal mining and reclamation operations be "in accordance with" the requirements of SMCRA. Section 503(a)(7) requires that State programs contain rules and regulations "consistent with" regulations issued by the Secretary pursuant to SMCRA.

Executive Order 13175—Consultation and Coordination With Indian Tribal Governments

In accordance with Executive Order 13175, we have evaluated the potential effects of this rule on Federally-recognized Indian tribes and have determined that the rule does not have substantial direct effects on one or more Indian tribes, on the relationship between the Federal Government and Indian tribes, or on the distribution of power and responsibilities between the Federal Government and Indian Tribes. The basis for this determination is that our decision is on a State regulatory program and does not involve Federal regulations involving Indian lands.

Executive Order 13211—Regulations That Significantly Affect the Supply, Distribution, or Use of Energy

On May 18, 2001, the President issued Executive Order 13211 which requires agencies to prepare a Statement of Energy Effects for a rule that is (1) considered significant under Executive Order 12866, and (2) likely to have a significant adverse effect on the supply, distribution, or use of energy. Because this rule is exempt from review under Executive Order 12866 and is not expected to have a significant adverse effect on the supply, distribution, or use of energy, a Statement of Energy Effects is not required.

National Environmental Policy Act

This rule does not require an environmental impact statement because section 702(d) of SMCRA (30 U.S.C. 1292(d)) provides that agency decisions on proposed State regulatory program provisions do not constitute major Federal actions within the meaning of section 102(2)(C) of the National Environmental Policy Act (42 U.S.C. 4332(2)(C)).

Paperwork Reduction Act

This rule does not contain information collection requirements that require approval by OMB under the Paperwork Reduction Act (44 U.S.C. 3507 *et seq.*).

Regulatory Flexibility Act

The Department of the Interior certifies that this rule will not have a significant economic impact on a substantial number of small entities under the Regulatory Flexibility Act (5 U.S.C. 601 *et seq.*). This analysis is based on the nature of the proposed amendment which does not impose requirements on small entities.

Small Business Regulatory Enforcement Fairness Act

This rule is not a major rule under 5 U.S.C. 804(2), the Small Business Regulatory Enforcement Fairness Act. This rule: (a) Does not have an annual effect on the economy of $100 million; (b) will not cause a major increase in costs or prices for consumers, individual industries, geographic regions, or Federal, State or local governmental agencies; and (c) does not have significant adverse effects on competition, employment, investment, productivity, innovation, or the ability of U.S.-based enterprises to compete with foreign-based enterprises. This determination is based upon an analysis of the proposed amendment which does not impose new requirements on the regulated industry.

Unfunded Mandates

This rule will not impose an unfunded mandate on state, local, or tribal governments or the private sector of $100 million or more in any given year. This determination is based upon the fact that the state submitted the amendment on its own initiative.

List of Subjects in 30 CFR Part 938

Intergovernmental relations, Surface mining, Underground mining.

Dated: February 23, 2010.

Thomas D. Shope,

Regional Director, Appalachian Region.

Editorial Note: This document was received in the Office of the Federal Register on June 16, 2010.

[FR Doc. 2010–14869 Filed 6–18–10; 8:45 am]

BILLING CODE 4310–05–P

ENVIRONMENTAL PROTECTION AGENCY

40 CFR Part 52

[EPA–R03–OAR–2010–0319; FRL–9164–3]

Approval and Promulgation of Air Quality Implementation Plans; Pennsylvania; Amendment to Consumer Products and Architectural and Industrial Maintenance Coatings Regulations

AGENCY: Environmental Protection Agency (EPA).

ACTION: Proposed rule.

SUMMARY: EPA is proposing to approve a State Implementation Plan (SIP) revision submitted by the Commonwealth of Pennsylvania concerning amendments to the Pennsylvania Consumer Products and Architectural and Industrial Maintenance Coatings Regulations. The revision amends 25 *Pa. Code* Chapter 130, Subchapters B and C (relating to consumer products and architectural and industrial maintenance (AIM) coatings) in order to reduce volatile organic compounds (VOCs). This action is being taken under the Clean Air Act (CAA).

DATES: Written comments must be received on or before July 21, 2010.

ADDRESSES: Submit your comments, identified by Docket ID Number EPA–R03–OAR–2010–0319 by one of the following methods:

A. *http://www.regulations.gov.* Follow the on-line instructions for submitting comments.

B. *E-mail: fernandez.cristina@epa.gov.*

C. *Mail:* EPA–R03–OAR–2010–0319, Cristina Fernandez, Office of Air Program Planning, Mailcode 3AP30, U.S. Environmental Protection Agency, Region III, 1650 Arch Street, Philadelphia, Pennsylvania 19103.

D. *Hand Delivery:* At the previously-listed EPA Region III address. Such deliveries are only accepted during the Docket's normal hours of operation, and special arrangements should be made for deliveries of boxed information.

Instructions: Direct your comments to Docket ID No. EPA–R03–OAR–2010–0319. EPA's policy is that all comments received will be included in the public docket without change, and may be made available online at *http://www.regulations.gov,* including any personal information provided, unless the comment includes information claimed to be Confidential Business Information (CBI) or other information whose disclosure is restricted by statute. Do not submit information that you consider to be CBI or otherwise protected through *http://www.regulations.gov* or e-mail. The *http://www.regulations.gov* Web site is an "anonymous access" system, which means EPA will not know your identity or contact information unless you provide it in the body of your comment. If you send an e-mail comment directly to EPA without going through *http://www.regulations.gov,* your e-mail address will be automatically captured and included as part of the comment that is placed in the public docket and made available on the Internet. If you submit an electronic comment, EPA recommends that you include your name and other contact information in the body of your comment and with any disk or CD–ROM you submit. If EPA cannot read your comment due to technical difficulties and cannot contact you for clarification, EPA may not be

able to consider your comment. Electronic files should avoid the use of special characters, any form of encryption, and be free of any defects or viruses.

Docket: All documents in the electronic docket are listed in the *http://www.regulations.gov* index. Although listed in the index, some information is not publicly available, *i.e.,* CBI or other information whose disclosure is restricted by statute. Certain other material, such as copyrighted material, is not placed on the Internet and will be publicly available only in hard copy form. Publicly available docket materials are available either electronically in *http://www.regulations.gov* or in hard copy during normal business hours at the Air Protection Division, U.S. Environmental Protection Agency, Region III, 1650 Arch Street, Philadelphia, Pennsylvania 19103. Copies of the State submittal are available at the Pennsylvania Department of Environmental Protection, Bureau of Air Quality Control, P.O. Box 8468, 400 Market Street, Harrisburg, Pennsylvania 17105.

FOR FURTHER INFORMATION CONTACT: Gregory Becoat, (215) 814–2036, or by e-mail at *becoat.gregory@epa.gov.*

SUPPLEMENTARY INFORMATION:

I. Background

On March 11, 2009, the Pennsylvania Department of Environmental Protection (PADEP) submitted a revision to its SIP for amendments to 25 *Pa. Code* Chapter 130, Subchapters B and C (relating to consumer products and AIM coatings). This SIP revision amends 25 *Pa. Code* Chapter 130, Subchapters B by adding VOC content limits for an additional 11 categories of consumer products and revising the VOC content limits for one category of consumer products currently regulated. The revision also adds definitions for approximately 30 new terms, including those that relate to the newly regulated product categories and amends definitions for approximately 75 existing terms in order to provide clarity. Additionally, the term "VOC—volatile organic compound" is added to Subchapter B.

The SIP revision changes the definition of the term "VOC—volatile organic compound" in Subchapter C (relating to AIM coatings) to mirror the definition of the term in 25 *Pa. Code* Chapter 121 (relating to definitions). This revision will make the most currently VOC exempt compounds available as tools to reduce ozone formation.

The standards and requirements contained in Pennsylvania's consumer products rule are consistent with the Ozone Transport Commission (OTC) model rule. The OTC consumer products model rule was based on the existing rules developed by the California Air Resources Board, which were analyzed and modified by the OTC workgroup to address VOC reduction needs in the Ozone Transport Region (OTR). Implementing this rule will result in SIP emission reductions in VOC to support the attainment demonstrations, and reductions in ground-level ozone in other areas of the OTR.

II. Summary of SIP Revision

This SIP revision consists of the following amendments:

1. Adds and/or amends definitions, terms, and sections in 25 *Pa. Code* Chapter 130, Subchapters B and C for clarity, style, format, and consistency with the OTC Model Rule and Federal definitions.

2. Adds and/or amends sections in 25 *Pa. Code* Chapter 130, Subchapter B in order to incorporate future changes in test procedures, delete an unnecessary reference to a California regulatory provision, delete and move definitions and terms, allow for the sell-through of product manufactured prior to applicable effective dates, update the product dating, establish the lowest applicable VOC limit requirements, require additional information on product containers, and establish requirements for a variance or alternative control plan (ACP).

3. Establishes under 25 *Pa. Code* Chapter 130, Subchapter B, applicability to any person who sells, supplies, offers for sale, or manufactures consumer products on and after applicable compliance dates.

4. Establishes under 25 *Pa. Code* Chapter 130, Subchapter B, the percentage of VOC by weight that cannot be exceeded for consumer products that are sold, supplied, offered for sale or manufactured for sale in the Commonwealth of Pennsylvania, and lists exemptions from the VOC limits. The rule also contains requirements for the following: (1) Products registered under FIFRA, (2) products requiring dilution, (3) sell-through of products, (4) aerosols adhesives, (5) charcoal lighter materials, and (6) floor wax strippers.

5. Establishes under 25 *Pa. Code* Chapter 130, Subchapter B, exemptions for the following: (1) Products for shipment and use outside the Commonwealth, (2) antiperspirants and deodorants, (3) products registered under FIFRA, (4) air fresheners, (5) adhesives, (6) bait station insecticides, and (7) fragrances.

6. Establishes under 25 *Pa. Code* Chapter 130, Subchapter B, applicability for ACPs for consumer products and criteria for innovative products exemption and requirements for waiver requests. The rule also contains grounds for requesting a variance, as well as applicability for ACPs for consumer products. ACPs for consumer products are provided by allowing responsible parties the option to voluntarily enter into separate ACP agreements for the consumer products mentioned above. In addition, the rule contains the following administrative requirements: (1) Product dating, (2) most restrictive limit, (3) labeling, and (4) recordkeeping and reporting, as well as test methods for demonstrating compliance.

7. Establishes under 25 *Pa. Code* Chapter 130, Subchapter C, the meaning of "VOC—volatile organic compound," unless the context clearly indicates otherwise.

Further details of the Commonwealth of Pennsylvania's regulation revisions can be found in a Technical Support Document prepared for this proposed rulemaking action.

III. Proposed Action

EPA has determined that the revisions made to 25 *Pa. Code* Chapter 130, Subchapters B and C meet the SIP revision requirements of the CAA and is proposing to approve the amendments to Pennsylvania's Consumer Products and AIM Coatings Regulations. This revision will result in the reduction of VOC emissions in the Commonwealth of Pennsylvania. EPA is soliciting public comments on the issues discussed in this document. These comments will be considered before taking final action.

IV. Statutory and Executive Order Reviews

Under the Clean Air Act, the Administrator is required to approve a SIP submission that complies with the provisions of the Act and applicable Federal regulations. 42 U.S.C. 7410(k); 40 CFR 52.02(a). Thus, in reviewing SIP submissions, EPA's role is to approve State choices, provided that they meet the criteria of the Clean Air Act. Accordingly, this action merely proposes to approve State law as meeting Federal requirements and does not impose additional requirements beyond those imposed by State law. For that reason, this proposed action:

- Is not a "significant regulatory action" subject to review by the Office of Management and Budget under Executive Order 12866 (58 FR 51735, October 4, 1993);
- Does not impose an information collection burden under the provisions

of the Paperwork Reduction Act (44 U.S.C. 3501 *et seq.*);

• Is certified as not having a significant economic impact on a substantial number of small entities under the Regulatory Flexibility Act (5 U.S.C. 601 *et seq.*);

• Does not contain any unfunded mandate or significantly or uniquely affect small governments, as described in the Unfunded Mandates Reform Act of 1995 (Pub. L. 104–4);

• Does not have Federalism implications as specified in Executive Order 13132 (64 FR 43255, August 10, 1999);

• Is not an economically significant regulatory action based on health or safety risks subject to Executive Order 13045 (62 FR 19885, April 23, 1997);

• Is not a significant regulatory action subject to Executive Order 13211 (66 FR 28355, May 22, 2001);

• Is not subject to requirements of Section 12(d) of the National Technology Transfer and Advancement Act of 1995 (15 U.S.C. 272 note) because application of those requirements would be inconsistent with the Clean Air Act; and

• Does not provide EPA with the discretionary authority to address, as appropriate, disproportionate human health or environmental effects, using practicable and legally permissible methods, under Executive Order 12898 (59 FR 7629, February 16, 1994).

In addition, this proposed rule, pertaining to Pennsylvania's amendment to 25 *Pa. Code* Chapter 130, Subchapters B and C (relating to Pennsylvania's Consumer Products and AIM Coatings Regulations), does not have Tribal implications as specified by Executive Order 13175 (65 FR 67249, November 9, 2000), because the SIP is not approved to apply in Indian country located in the State, and EPA notes that it will not impose substantial direct costs on Tribal governments or preempt Tribal law.

List of Subjects in 40 CFR Part 52

Environmental protection, Air pollution control, Ozone, Reporting and recordkeeping requirements, Volatile organic compounds.

Authority: 42 U.S.C. 7401 *et seq.*

Dated: June 7, 2010.

W.C. Early,

Acting Regional Administrator, Region III.

[FR Doc. 2010–14777 Filed 6–18–10; 8:45 am]

BILLING CODE 6560–50–P

DEPARTMENT OF TRANSPORTATION

National Highway Traffic Safety Administration

49 CFR Part 544

[Docket No. NHTSA–2010–0017]

RIN 2127–AK69

Insurer Reporting Requirements; List of Insurers Required To File Reports

AGENCY: National Highway Traffic Safety Administration (NHTSA), Department of Transportation (DOT).

ACTION: Notice of proposed rulemaking.

SUMMARY: This document proposes to amend appendices to NHTSA regulations on Insurer Reporting Requirements. The appendices list those passenger motor vehicle insurers that are required to file reports on their motor vehicle theft loss experiences. An insurer included in any of these appendices would be required to file three copies of its report for the 2007 calendar year before October 25, 2010. If the passenger motor vehicle insurers remain listed, they must submit reports by each subsequent October 25. We are proposing to add and remove several insurers from relevant appendices.

DATES: Comments must be submitted not later than August 20, 2010. Insurers listed in the appendices are required to submit reports on or before October 25, 2010.

ADDRESSES: You may submit comments, identified by DOT Docket No. NHTSA–2010–0017 by any of the following methods:

• *Federal eRulemaking Portal:* Go to *http://www.regulations.gov.* Follow the online instructions for submitting comments.

• *Mail:* Docket Management Facility: U.S. Department of Transportation, 1200 New Jersey Avenue, SE., West Building, Ground Floor, Room W12–140, Washington, DC 20590–0001.

• *Hand Delivery or Courier:* West Building Ground Floor, Room W12–140, 1200 New Jersey Avenue, SE., Washington, DC, between 9 a.m. and 5 p.m. ET, Monday through Friday, except Federal holidays.

• *Fax:* 1–202–493–2251.

Instructions: For detailed instructions on submitting comments and additional information on the rulemaking process, see the Public Participation heading of the **SUPPLEMENTARY INFORMATION** section of this document. Note that all comments received will be posted without change to *http://www.regulations.gov,* including any personal information provided. *Please see* the Privacy Act heading below.

Privacy Act: Anyone is able to search the electronic form of all comments received into any of our dockets by the name of the individual submitting the comment (or signing the comment, if submitted on behalf of an association, business, labor union, *etc.*). You may review DOT's complete Privacy Act Statement in the **Federal Register** published on April 11, 2000 (65 FR 19477–78) or you may visit *http://DocketInfo.dot.gov.*

Docket: For access to the docket to read background documents or comments received, go to the street address listed above. The Internet access to the docket will be at *http://www.regulations.gov.* Follow the online instructions for accessing the dockets.

FOR FURTHER INFORMATION CONTACT: Carlita Ballard, Office of International Policy, Fuel Economy and Consumer Programs, NHTSA, 1200 New Jersey Avenue, SE., Washington, DC 20590, by electronic mail to *Carlita.Ballard@dot.gov.* Ms. Ballard's telephone number is (202) 366–0846. Her fax number is (202) 493–2990.

SUPPLEMENTARY INFORMATION:

I. Background

Pursuant to 49 U.S.C. 33112, *Insurer reports and information,* NHTSA requires certain passenger motor vehicle insurers to file an annual report with the agency. Each insurer's report includes information about thefts and recoveries of motor vehicles, the rating rules used by the insurer to establish premiums for comprehensive coverage, the actions taken by the insurer to reduce such premiums, and the actions taken by the insurer to reduce or deter theft. Under the agency's regulation, 49 CFR Part 544, the following insurers are subject to the reporting requirements:

(1) Issuers of motor vehicle insurance policies whose total premiums account for 1 percent or more of the total premiums of motor vehicle insurance issued within the United States;

(2) Issuers of motor vehicle insurance policies whose premiums account for 10 percent or more of total premiums written within any one State; and

(3) Rental and leasing companies with a fleet of 20 or more vehicles not covered by theft insurance policies issued by insurers of motor vehicles, other than any governmental entity.

Pursuant to its statutory exemption authority, the agency exempted certain passenger motor vehicle insurers from the reporting requirements.

A. Small Insurers of Passenger Motor Vehicles

Section 33112(f)(2) provides that the agency shall exempt small insurers of

passenger motor vehicles if NHTSA finds that such exemptions will not significantly affect the validity or usefulness of the information in the reports, either nationally or on a State-by-State basis. The term "small insurer" is defined, in Section 33112(f)(1)(A) and (B), as an insurer whose premiums for motor vehicle insurance issued directly or through an affiliate, including pooling arrangements established under State law or regulation for the issuance of motor vehicle insurance, account for less than 1 percent of the total premiums for all forms of motor vehicle insurance issued by insurers within the United States. However, that section also stipulates that if an insurance company satisfies this definition of a "small insurer," but accounts for 10 percent or more of the total premiums for all motor vehicle insurance issued in a particular State, the insurer must report about its operations in that State.

In the final rule establishing the insurer reports requirement (52 FR 59; January 2, 1987), 49 CFR Part 544, NHTSA exercised its exemption authority by listing in Appendix A each insurer that must report because it had at least 1 percent of the motor vehicle insurance premiums nationally. Listing the insurers subject to reporting, instead of each insurer exempted from reporting because it had less than 1 percent of the premiums nationally, is administratively simpler since the former group is much smaller than the latter. In Appendix B, NHTSA lists those insurers required to report for particular States because each insurer had a 10 percent or greater market share of motor vehicle premiums in those States. In the January 1987 final rule, the agency stated that it would update Appendices A and B annually. NHTSA updates the appendices based on data voluntarily provided by insurance companies to A.M. Best.[1] A.M. Best publishes in its *State/Line Report* each spring. The agency uses the data to determine the insurers' market shares nationally and in each State.

B. Self-Insured Rental and Leasing Companies

In addition, upon making certain determinations, NHTSA grants exemptions to self-insurers, *i.e.,* any person who has a fleet of 20 or more motor vehicles (other than any governmental entity) used for rental or lease whose vehicles are not covered by theft insurance policies issued by insurers of passenger motor vehicles, 49 U.S.C. 33112(b)(1) and (f). Under 49 U.S.C. 33112(e)(1) and (2), NHTSA may exempt a self-insurer from reporting, if the agency determines:

(1) the cost of preparing and furnishing such reports is excessive in relation to the size of the business of the insurer; and 33112(e)(1) and (2),

(2) the insurer's report will not significantly contribute to carrying out the purposes of Chapter 331.

In a final rule published June 22, 1990 (55 FR 25606), the agency granted a class exemption to all companies that rent or lease fewer than 50,000 vehicles, because it believed that the largest companies' reports sufficiently represent the theft experience of rental and leasing companies. NHTSA concluded that smaller rental and leasing companies' reports do not significantly contribute to carrying out NHTSA's statutory obligations and that exempting such companies will relieve an unnecessary burden on them. As a result of the June 1990 final rule, the agency added Appendix C, consisting of an annually updated list of the self-insurers subject to Part 544. Following the same approach as in Appendix A, NHTSA included, in Appendix C, each of the self-insurers subject to reporting instead of the self-insurers which are exempted.

NHTSA updates Appendix C based primarily on information from *Automotive Fleet Magazine* and *Auto Rental News*.[2]

C. When a Listed Insurer Must File a Report

Under Part 544, as long as an insurer is listed, it must file reports on or before October 25 of each year. Thus, any insurer listed in the appendices must file a report before October 25, and by each succeeding October 25, absent an amendment removing the insurer's name from the appendices.

II. Proposal

1. Insurers of Passenger Motor Vehicles

Appendix A lists insurers that must report because each had 1 percent of the motor vehicle insurance premiums on a national basis. The list was last amended in a final rule published on January 12, 2010 (75 FR 1548). Based on the 2007 calendar year data market shares from A. M. Best, NHTSA proposes to make no change to Appendix A.

Each of the 19 insurers listed in Appendix A are required to file a report before October 25, 2010, setting forth the information required by Part 544 for each State in which it did business in the 2007 calendar year. As long as these 19 insurers remain listed, they will be required to submit reports by each subsequent October 25 for the calendar year ending slightly less than 3 years before.

Appendix B lists insurers required to report for particular States for calendar year 2007, because each insurer had a 10 percent or greater market share of motor vehicle premiums in those States. Based on the 2007 calendar year data for market shares from A.M. Best, we propose to add Balboa Insurance Group of South Dakota to Appendix B.

The nine remaining insurers listed in Appendix B are required to report on their calendar year 2007 activities in every State where they had a 10 percent or greater market share. These reports must be filed by October 25, 2010, and set forth the information required by Part 544. As long as these nine insurers remain listed, they would be required to submit reports on or before each subsequent October 25 for the calendar year ending slightly less than 3 years before.

2. Rental and Leasing Companies

Appendix C lists rental and leasing companies required to file reports. Subsequent to publishing the January 12, 2010 final rule (*see* 75 FR 1548), the agency was informed by Enterprise Rent-A-Car company (Enterprise), that it purchased Vanguard Car Rental, USA (Vanguard) in August of 2007, and that Vanguard will no longer be reporting as a separate entity because it merged with Enterprise in August of 2009. Specifically, Enterprise stated that all reporting will be performed by its parent company, Enterprise Holdings, Inc. for all three brands, National, Alamo and Enterprise. Therefore, NHTSA proposes to remove Vanguard Car Rental USA from the list of insurers required to meet the reporting requirements.

Each of the remaining five companies (including franchisees and licensees) listed in Appendix C are required to file reports for calendar year 2007 no later than October 25, 2010, and set forth the information required by Part 544. As long as those five companies remain listed, they would be required to submit reports before each subsequent October 25 for the calendar year ending slightly less than 3 years before.

[1] A.M. Best Company is a well-recognized source of insurance company ratings and information. 49 U.S.C. 33112(i) authorizes NHTSA to consult with public and private organizations as necessary.

[2] Automotive Fleet Magazine and Auto Rental News are publications that provide information on the size of fleets and market share of rental and leasing companies.

III. Regulatory Impacts

1. Costs and Other Impacts

This notice has not been reviewed under Executive Order 12866. NHTSA has considered the impact of this proposed rule and determined that the action is not "significant" within the meaning of the Department of Transportation's regulatory policies and procedures. This proposed rule implements the agency's policy of ensuring that all insurance companies that are statutorily eligible for exemption from the insurer reporting requirements are in fact exempted from those requirements. Only those companies that are not statutorily eligible for an exemption are required to file reports.

NHTSA does not believe that this proposed rule, reflecting current data, affects the impacts described in the final regulatory evaluation prepared for the final rule establishing Part 544 (52 FR 59; January 2, 1987). Accordingly, a separate regulatory evaluation has not been prepared for this rulemaking action. The cost estimates in the 1987 final regulatory evaluation should be adjusted for inflation, using the Bureau of Labor Statistics Consumer Price Index for 2009 (*see http://www.bls.gov/cpi*). The agency estimates that the cost of compliance is $50,000 (1987 dollars) for any insurer added to Appendix A, $20,000 (1987 dollars) for any insurer added to Appendix B, and $5,770 (1987 dollars) for any insurer added to Appendix C. If this proposed rule is made final, for Appendix A, the agency would propose to make no change; for Appendix B, the agency would propose to add one company; and for Appendix C, the agency would propose to remove one company. The agency estimates that the net effect of this proposal, if made final, would be a cost increase of approximately $14,220 (1987 dollars) to insurers as a group.

Interested persons may wish to examine the 1987 final regulatory evaluation. Copies of that evaluation were placed in Docket No. T86–01; Notice 2. Any interested person may obtain a copy of this evaluation by writing to NHTSA, Technical Reference Division, 1201 New Jersey Avenue, SE., East Building, Ground Floor, Room E12–100, Washington, DC 20590, or by calling (202) 366–2588.

2. Paperwork Reduction Act

The information collection requirements in this proposed rule were submitted to the Office of Management and Budget (OMB) pursuant to the requirements of the Paperwork Reduction Act (44 U.S.C. 3501 *et seq.*). This collection of information is assigned OMB Control Number 2127–0547 ("Insurer Reporting Requirements"). This collection of information is approved for use through April 30, 2012 and the agency will seek to extend the approval afterwards. The existing information collection indicates that the number of respondents for this collection is thirty-three, however, the actual number of respondents fluctuate from year to year. Therefore, because the number of respondents required to report for this final rule does not exceed the number of respondents indicated in the existing information collection, the agency does not believe that an amendment to the existing information collection is necessary.

3. Regulatory Flexibility Act

The agency also considered the effects of this rulemaking under the Regulatory Flexibility Act (RFA) (5 U.S.C. 601 *et seq.*). I certify that this proposed rule will not have a significant economic impact on a substantial number of small entities. The rationale for the certification is that none of the companies proposed for Appendices A, B, or C are construed to be a small entity within the definition of the RFA. "Small insurer" is defined, in part under 49 U.S.C. 33112, as any insurer whose premiums for all forms of motor vehicle insurance account for less than 1 percent of the total premiums for all forms of motor vehicle insurance issued by insurers within the United States, or any insurer whose premiums within any State account for less than 10 percent of the total premiums for all forms of motor vehicle insurance issued by insurers within the State. This notice would exempt all insurers meeting those criteria. Any insurer too large to meet those criteria is not a small entity. In addition, in this rulemaking, the agency proposes to exempt all "self insured rental and leasing companies" that have fleets of fewer than 50,000 vehicles. Any self-insured rental and leasing company too large to meet that criterion is not a small entity.

4. Federalism

This action has been analyzed according to the principles and criteria contained in Executive Order 12612, and it has been determined that the proposed rule does not have sufficient federalism implications to warrant the preparation of a Federalism Assessment.

5. Environmental Impacts

In accordance with the National Environmental Policy Act, NHTSA has considered the environmental impacts of this proposed rule and determined that it would not have a significant impact on the quality of the human environment.

6. Regulation Identifier Number (RIN)

The Department of Transportation assigns a regulation identifier number (RIN) to each regulatory action listed in the Unified Agenda of Federal Regulations. The Regulatory Information Service Center publishes the Unified Agenda in April and October of each year. You may use the RIN contained in the heading, at the beginning, of this document to find this action in the Unified Agenda.

7. Plain Language

Executive Order 12866 and the President's memorandum of June 1, 1998, require each agency to write all rules in plain language. Application of the principles of plain language includes consideration of the following questions:

- Have we organized the material to suit the public's needs?
- Are the requirements in the proposal clearly stated?
- Does the proposal contain technical language or jargon that is not clear?
- Would a different format (grouping and order of sections, use of headings, paragraphing) make the rule easier to understand?
- Would more (but shorter) sections be better?
- Could we improve clarity by adding tables, lists, or diagrams?
- What else could we do to make the proposal easier to understand?

If you have any responses to these questions, you can forward them to me several ways:

a. *Mail:* Carlita Ballard, Office of International Policy, Fuel Economy and Consumer Programs, NHTSA, 1200 New Jersey Avenue, SE., (West Building) Washington, DC 20590;

b. *E-mail: Carlita.Ballard@dot.gov;* or

c. *Fax:* (202) 493–2990.

IV. Comments

Submission of Comments

1. How can I influence NHTSA's thinking on this proposed rule?

In developing our rules, NHTSA tries to address the concerns of all our stakeholders. Your comments will help us improve this rule. We invite you to provide views on our proposal, new data, a discussion of the effects of this proposal on you, or other relevant information. We welcome your views on all aspects of this proposed rule. Your comments will be most effective if you follow the suggestions below:

- Explain your views and reasoning clearly.

• Provide solid technical and cost data to support your views.
• If you estimate potential costs, explain how you derived the estimate.
• Provide specific examples to illustrate your concerns.
• Offer specific alternatives.
• Include the name, date, and docket number with your comments.

2. How do I prepare and submit comments?

Your comments must be written in English. To ensure that your comments are correctly filed in the Docket, please include the docket number of this document in your comments.

Your comments must not exceed 15 pages long (49 CFR 553.21). We established this limit to encourage you to write your primary comments concisely. You may attach necessary documents to your comments. We have no limit on the attachments' length.

Please submit two copies of your comments, including the attachments, to Docket Management at the address given above under **ADDRESSES**.

Comments may also be submitted to the docket electronically by logging onto the Federal eRulemaking Portal Web site at *http://www.regulation.gov.* Follow the online instructions for submitting comments.

3. How can I be sure that my comments were received?

If you wish Docket Management to notify you, upon its receipt of your comments, enclose a self-addressed, stamped postcard in the envelope containing your comments. Upon receiving your comments, Docket Management will mail the postcard.

4. How do I submit confidential business information?

If you wish to submit any information under a confidentiality claim, you should submit three copies of your complete submission, including the information you claim as confidential business information, to the Chief Counsel, Office of Chief Counsel, NHTSA, 1200 New Jersey Avenue, SE., West Building, Washington, DC 20590. In addition, you should submit two copies, from which you have deleted the claimed confidential business information, to Docket Management at the address given above under **ADDRESSES**. When you send a comment containing information claimed to be confidential business information, you should include a cover letter addressing the information specified in our confidential business information regulation (49 CFR Part 512).

5. Will the agency consider late comments?

NHTSA will consider all comments that Docket Management receives before the close of business on the comment closing date indicated above under **DATES**. To the extent possible, we will also consider comments that Docket Management receives after that date. If Docket Management receives a comment too late for us to consider, in developing a final rule (assuming that one is issued), we will consider that comment as an informal suggestion for future rulemaking action.

6. How can I read the comments submitted by other people?

You may read the comments received by Docket Management at the address given above under **ADDRESSES**. The hours of the Docket are indicated above, in the same location. You may also see the comments on the Internet. To read the comments on the Internet, log onto the Federal eRulemaking Portal at *http://www.regulation.gov.*

V. Conclusion

Based on the foregoing, we are proposing to amend Appendices B and C of 49 CFR 544, Insurer Reporting Requirements. We are also amending § 544.5 to revise the example given the recent update to the reporting requirements.

List of Subjects in 49 CFR Part 544

Crime insurance, Insurance, Insurance companies, Motor vehicles, Reporting and recordkeeping requirements.

In consideration of the foregoing, 49 CFR Part 544 is proposed to be amended as follows:

PART 544—[AMENDED]

1. The authority citation for part 544 continues to read as follows:

Authority: 49 U.S.C. 33112; delegation of authority at 49 CFR 1.50.

2. Paragraph (a) of § 544.5 is revised to read as follows:

§ 544.5 General requirements for reports.

(a) Each insurer to which this part applies shall submit a report annually before October 25, beginning on October 25, 1986. This report shall contain the information required by § 544.6 of this part for the calendar year 3 years previous to the year in which the report is filed (*e.g.,* the report due by October 25, 2010, will contain the required information for the 2007 calendar year).

* * * * *

3. Appendix A to Part 544 is revised to read as follows:

Appendix A—Insurers of Motor Vehicle Insurance Policies Subject to the Reporting Requirements in Each State in Which They Do Business

Allstate Insurance Group
American Family Insurance Group
American International Group
Auto Club Enterprise Insurance Group
Auto-Owners Insurance Group
Erie Insurance Group
Berkshire Hathaway/GEICO Corporation Group
California State Auto Group
Hartford Insurance Group
Liberty Mutual Insurance Companies
Metropolitan Life Auto & Home Group
Mercury General Group
Nationwide Group
Progressive Group
Safeco Insurance Companies
State Farm Group
Travelers Companies
USAA Group
Farmers Insurance Group

4. Appendix B to Part 544 is revised to read as follows:

Appendix B—Issuers of Motor Vehicle Insurance Policies Subject to the Reporting Requirements Only in Designated States

Alfa Insurance Group (Alabama)
Auto Club (Michigan)
Balboa Insurance Group (South Dakota) [1]
Commerce Group, Inc. (Massachusetts)
Kentucky Farm Bureau Group (Kentucky)
New Jersey Manufacturers Group (New Jersey)
Safety Group (Massachusetts)
Southern Farm Bureau Group (Arkansas, Mississippi)
Tennessee Farmers Companies (Tennessee)

5. Appendix C to Part 544 is revised to read as follows:

Appendix C—Motor Vehicle Rental and Leasing Companies (Including Licensees and Franchisees) Subject to the Reporting Requirements of Part 544

Cendant Car Rental
Dollar Thrifty Automotive Group
Enterprise Holding Inc./Enterprise Rent-A-Car Company [2]
Hertz Rent-A-Car Division (subsidiary of The Hertz Corporation)
U-Haul International, Inc. (subsidiary of AMERCO)

Issued on: June 14, 2010.

Stephen R. Kratzke,

Associate Administrator for Rulemaking.

[FR Doc. 2010–14841 Filed 6–18–10; 8:45 am]

BILLING CODE 4910–59–P

[1] Indicates a newly listed company which must file a report beginning with the report due October 25, 2010.

[2] Enterprise Rent-A-Car Company acquired ownership of Vanguard Car Rental USA in August 2007.

Notices

Federal Register

Vol. 75, No. 118

Monday, June 21, 2010

This section of the FEDERAL REGISTER contains documents other than rules or proposed rules that are applicable to the public. Notices of hearings and investigations, committee meetings, agency decisions and rulings, delegations of authority, filing of petitions and applications and agency statements of organization and functions are examples of documents appearing in this section.

DEPARTMENT OF AGRICULTURE

Submission for OMB Review; Comment Request

June 16, 2010.

The Department of Agriculture has submitted the following information collection requirement(s) to OMB for review and clearance under the Paperwork Reduction Act of 1995, Public Law 104–13. Comments regarding (a) whether the collection of information is necessary for the proper performance of the functions of the agency, including whether the information will have practical utility; (b) the accuracy of the agency's estimate of burden including the validity of the methodology and assumptions used; (c) ways to enhance the quality, utility and clarity of the information to be collected; (d) ways to minimize the burden of the collection of information on those who are to respond, including through the use of appropriate automated, electronic, mechanical, or other technological collection techniques or other forms of information technology should be addressed to: Desk Officer for Agriculture, Office of Information and Regulatory Affairs, Office of Management and Budget (OMB), *OIRA_Submission@OMB.EOP.GOV* or fax (202) 395–5806 and to Departmental Clearance Office, USDA, OCIO, Mail Stop 7602, Washington, DC 20250–7602. Comments regarding these information collections are best assured of having their full effect if received within 30 days of this notification. Copies of the submission(s) may be obtained by calling (202) 720–8681.

An agency may not conduct or sponsor a collection of information unless the collection of information displays a currently valid OMB control number and the agency informs potential persons who are to respond to the collection of information that such persons are not required to respond to the collection of information unless it displays a currently valid OMB control number.

Rural Utilities Service

Title: Technical Assistance Program, 7 CFR Part 1775.

OMB Control Number: 0572–0112.

Summary of Collection: Section 306 of the Consolidated Farm and Rural Development Act (CONACT), 7 U.S.C. 1926, authorizes Rural Utilities Service (RUS) to make loans and grants to public agencies, American Indian tribes, and nonprofit corporations. The loans and grants fund the development of drinking water, wastewater, and solid waste disposal facilities in rural areas with populations of up to 10,000 residents. Nonprofit organizations receive Technical Assistance and Training (TAT) and Solid Waste Management (SWM) grants to help small rural communities or areas identify and solve problems relating to community drinking water, wastewater, or solid waste disposal systems. The technical assistance is intended to improve the management and operation of the systems and reduce or eliminate pollution of water resources. TAT and SWM are competitive grant programs administered by RUS.

Need and Use of the Information: Nonprofit organizations applying for TAT and SWM grants must submit a pre-application, which includes an application form, narrative proposal, various other forms, certifications and supplemental information. RUS will collect information to determine applicant eligibility, project feasibility, and the applicant's ability to meet the grant and regulatory requirements. RUS will review the information, evaluate it, and, if the applicant and project are eligible for further competition, invite the applicant to submit a formal application. Failure to collect proper information could result in improper determinations of eligibility, improper use of funds, or hindrances in making grants authorized by the TAT and SWM program.

Description of Respondents: Not-for-profit institutions; State, Local or Tribal Governments.

Number of Respondents: 142.

Frequency of Responses: Reporting: On occasion; Quarterly.

Total Burden Hours: 7,060.

Rural Utilities Service

Title: Environmental Policies and Procedures (7 CFR part 1794).

OMB Control Number: 0572–0117.

Summary of Collection: In December 1998, the Rural Utilities Service (RUS) published its revised Environmental Policies and Procedures and in 2003 revisions were made to clarify policy on certain environmental review processes. The rule promulgated environmental regulations that cover all RUS Federal actions taken by RUS' electric, telecommunications, water and environmental programs. The regulation was necessary to ensure continued RUS compliance with the Council on Environmental Quality (CEQ) Regulations for Implementing the Procedural Provisions of the National Environmental Policy Act (NEPA) (40 CFR Parts 1500–1508), and certain related Federal environmental laws, statutes, regulations, and Executive Orders. RUS electric, telecommunications, water and environmental program borrowers provide environmental documentation to assure that policy contained in NEPA is followed.

Need and Use of the Information: RUS will collect information to evaluate the cost and feasibility of the proposed project and the environmental impact. If the information is not collected, the agency would not be in compliance with NEPA and CEQ regulations.

Description of Respondents: Non-for-profit institutions; Business or other for-profit.

Number of Respondents: 1,339.

Frequency of Responses: Reporting: On occasion.

Total Burden Hours: 486,440.

Charlene Parker,

Departmental Information Collection Clearance Officer.

[FR Doc. 2010–14900 Filed 6–18–10; 8:45 am]

BILLING CODE 3410–15–P

DEPARTMENT OF AGRICULTURE

Submission for OMB Review; Comment Request

June 16, 2010.

The Department of Agriculture has submitted the following information collection requirement(s) to OMB for review and clearance under the Paperwork Reduction Act of 1995,

Public Law 104–13. Comments regarding (a) whether the collection of information is necessary for the proper performance of the functions of the agency, including whether the information will have practical utility; (b) the accuracy of the agency's estimate of burden including the validity of the methodology and assumptions used; (c) ways to enhance the quality, utility and clarity of the information to be collected; (d) ways to minimize the burden of the collection of information on those who are to respond, including through the use of appropriate automated, electronic, mechanical, or other technological collection techniques or other forms of information technology should be addressed to: Desk Officer for Agriculture, Office of Information and Regulatory Affairs, Office of Management and Budget (OMB), *OIRA_Submission@OMB.EOP.GOV* or fax (202) 395–5806 and to Departmental Clearance Office, USDA, OCIO, Mail Stop 7602, Washington, DC 20250–7602. Comments regarding these information collections are best assured of having their full effect if received within 30 days of this notification. Copies of the submission(s) may be obtained by calling (202) 720–8958.

An agency may not conduct or sponsor a collection of information unless the collection of information displays a currently valid OMB control number and the agency informs potential persons who are to respond to the collection of information that such persons are not required to respond to the collection of information unless it displays a currently valid OMB control number.

Food and Nutrition Service

Title: Education and Administrative Reporting System (EARS).

OMB Control Number: 0584–0542.

Summary of Collection: The Food and Nutrition Service (FNS) has developed Education and Administrative reporting System (EARS) for the nutrition education (SNAP–ED) component of the Supplemental Nutrition Assistance Program (SNAP), which is provided for in section 11(f) of the Food and Nutrition Act of 2008 (7 U.S.C. 2020 (f)(3)(B)(ii)). EARS will provide uniform data and information about the nutrition education activities of all participating States across the country. The data and information collected through EARS will inform management decisions, support policy initiatives, provide documentation for legislative, budget and other requests, and support planning within the agency. Data will be submitted electronically by all state SNAP agencies annually.

Need and Use of the Information: EARS will allow for the collection of uniform data on program activities, making it possible to describe who is reached, what they are taught and how resources are used in SNAP–Ed. Data collected under this system include demographic characteristics of participants receiving nutrition education benefits, topics covered by the educational intervention, education delivery sites, education strategies, and resource allocation. Without this data, FNS would not be able to respond timely and effectively to legislative and budget information requests or monitor trends in program activities.

Description of Respondents: State, Local, or Tribal Government.

Number of Respondents: 52.

Frequency of Responses: Reporting: Annually.

Total Burden Hours: 2,808.

Ruth Brown,

Departmental Information Collection Clearance Officer.

[FR Doc. 2010–14905 Filed 6–18–10; 8:45 am]

BILLING CODE 3410–30–P

DEPARTMENT OF AGRICULTURE

National Agricultural Statistics Service

Notice of Intent To Request Revision and Extension of a Currently Approved Information Collection

AGENCY: National Agricultural Statistics Service, USDA.

ACTION: Notice and request for comments.

SUMMARY: In accordance with the Paperwork Reduction Act of 1995, this notice announces the intention of the National Agricultural Statistics Service (NASS) to request revision and extension of a currently approved information collection, the Aquaculture Surveys. Revision to burden hours may be needed due to changes in the size of the target population, sampling design, and/or questionnaire length.

DATES: Comments on this notice must be received by August 20, 2010 to be assured of consideration.

ADDRESSES: You may submit comments, identified by docket number 0535–0150, by any of the following methods:

- *E-mail: ombofficer@nass.usda.gov.* Include docket number above in the subject line of the message.
- *Fax:* (202) 720–6396.
- *Mail:* Mail any paper, disk, or CD–ROM submissions to: David Hancock, NASS Clearance Officer, U.S. Department of Agriculture, Room 5336 South Building, 1400 Independence Avenue, SW., Washington, DC 20250–2024.
- *Hand Delivery/Courier:* Hand deliver to: David Hancock, NASS Clearance Officer, U.S. Department of Agriculture, Room 5336 South Building, 1400 Independence Avenue, SW., Washington, DC 20250–2024.

FOR FURTHER INFORMATION CONTACT: Joseph T. Reilly, Associate Administrator, National Agricultural Statistics Service, U.S. Department of Agriculture, (202) 720–4333.

SUPPLEMENTARY INFORMATION:

Title: Aquaculture Surveys.

OMB Control Number: 0535–0150.

Expiration Date: November 30, 2010.

Type of Request: To revise and extend a currently approved information collection for a period of three years.

Abstract: The primary objective of the National Agricultural Statistics Service is to prepare and issue State and national estimates of crop and livestock production, prices, and disposition. The Aquaculture Surveys collect information on both trout and catfish. The trout surveys include: Inventory counts, sales (dollars, pounds and quantity), percent of product sold by outlet at the point of first sale, number of fish raised for release into open waters, and losses. The catfish surveys include: inventory counts, water surface acreage used for production, sales (dollars, pounds, and quantity), number of catfish processed, and amount of catfish feed delivered to catfish producers. Survey results are used by government agencies in planning farm programs.

- Twenty-five States are in the trout growers' survey. In January, previous year trout sales data are collected from farmers and distributed fish data are collected from State and federal hatcheries.
- Nine States are in the catfish grower's survey. Data are collected from farmers in January for January inventory, water surface acreage, and previous year sales. In addition, farmers in the three major catfish producing States are surveyed in July for mid-year inventory and water surface acreage.
- All catfish processing plants, with the capacity to process 2,000 pounds of live weight per 8 hour shift are in the catfish processing survey. Plants are surveyed monthly for amount purchased, prices paid, amount sold, prices received, and end-of-month inventories.
- Fourteen catfish millers are surveyed monthly for the amount of feed delivered for food-size fish and fingerlings and broodfish.

Authority: These data will be collected under authority of 7 U.S.C. 2204(a). Individually identifiable data collected under this authority are governed by Section 1770 of the Food Security Act of 1985 as amended, 7 U.S.C. 2276, which requires USDA to afford strict confidentiality to non-aggregated data provided by respondents. This Notice is submitted in accordance with the Paperwork Reduction Act of 1995 (Pub. L. 104–13) and Office of Management and Budget regulations at 5 CFR part 1320 (60 FR 44978, August 29, 1995). NASS also complies with OMB Implementation Guidance, "Implementation Guidance for Title V of the E-Government Act, Confidential Information Protection and Statistical Efficiency Act of 2002 (CIPSEA)," **Federal Register**, Vol. 72, No. 115, June 15, 2007, p. 33362.

Estimate of Burden: Individual questionnaire burden ranges from 5 minutes to 15 minutes per response. Public reporting burden for this collection of information is estimated to average less than 15 minutes per response with 1.5 responses per grower and 12 responses each for feed mills and processors. Pre-survey publicity or cover letters will also be included to encourage respondents to complete and return the surveys.

Respondents: Farms, feed mills and processors.

Estimated Number of Respondents: 2,000.

Estimated Total Annual Burden on Respondents: 825 hours.

Copies of this information collection and related instructions can be obtained without charge from David Hancock, NASS Clearance Officer, at (202) 690–2388.

Comments: Comments are invited on: (a) Whether the proposed collection of information is necessary for the proper performance of the functions of the agency, including whether the information will have practical utility; (b) the accuracy of the agency's estimate of the burden of the proposed collection of information including the validity of the methodology and assumptions used; (c) ways to enhance the quality, utility, and clarity of the information to be collected; and (d) ways to minimize the burden of the collection of information on those who are to respond, through the use of appropriate automated, electronic, mechanical, technological or other forms of information technology collection methods.

All responses to this notice will become a matter of public record and be summarized in the request for OMB approval.

Signed at Washington, DC, June 3, 2010.

Joseph T. Reilly,

Associate Administrator.

[FR Doc. 2010–14844 Filed 6–18–10; 8:45 am]

BILLING CODE 3410–20–P

DEPARTMENT OF AGRICULTURE

National Agricultural Statistics Service

Notice of Invitation for Nominations to the Advisory Committee on Agriculture Statistics

AGENCY: National Agricultural Statistics Service (NASS), USDA.

ACTION: Solicitation of Nominations for Advisory Committee on Agriculture Statistics Membership.

SUMMARY: In accordance with the Federal Advisory Committee Act, 5 U.S.C. App. 2, this notice announces an invitation from the Office of the Secretary of Agriculture for nominations to the Advisory Committee on Agriculture Statistics.

On May 17, 2010, the Secretary of Agriculture renewed the Advisory Committee charter for another 2 years. The purpose of the Committee is to advise the Secretary of Agriculture on the scope, timing, content, etc., of the periodic censuses and surveys of agriculture, other related surveys, and the types of information to obtain from respondents concerning agriculture. The Committee also prepares recommendations regarding the content of agriculture reports and presents the views and needs for data of major suppliers and users of agriculture statistics.

DATES: Nominations must be received by July 9, 2010 to be assured of consideration.

ADDRESSES: Nominations should be mailed to Joe Reilly, Associate Administrator, National Agricultural Statistics Service, U.S. Department of Agriculture, 1400 Independence Avenue, SW., Room 5041A South Building, Washington, DC 20250–2000. In addition, nominations may be mailed electronically to *HQ_OA@nass.usda.gov*. In addition to mailed correspondence to the addresses listed above, nominations may also be faxed to (202) 720–9013.

FOR FURTHER INFORMATION CONTACT: Joe Reilly, Associate Administrator, National Agricultural Statistics Service, (202) 720–4333.

SUPPLEMENTARY INFORMATION: Nominations should include the following information: name, title, organization, address, telephone number, and e-mail address. Each person nominated is required to complete an Advisory Committee Membership Background Information form. This form may be requested by telephone, fax, or e-mail using the information above. Forms will also be available from the NASS home page *http://www.nass.usda.gov* by selecting "About NASS," "Advisory Committee on Agriculture Statistics." The "Advisory Committee for Agricultural Statistics" button is in the right column. Completed forms may be faxed to the number above, mailed, or completed and e-mailed directly from the Internet site.

The Committee draws on the experience and expertise of its members to form a collective judgment concerning agriculture data collected and the statistics issued by NASS. This input is vital to keep current with shifting data needs in the rapidly changing agricultural environment and keeps NASS informed of emerging issues in the agriculture community that can affect agriculture statistics activities.

The Committee, appointed by the Secretary of Agriculture, consists of 20 members representing a broad range of disciplines and interests, including, but not limited to, producers, representatives of national farm organizations, agricultural economists, rural sociologists, farm policy analysts, educators, State agriculture representatives, and agriculture-related business and marketing experts.

Members serve staggered 2-year terms, with terms for half of the Committee members expiring in any given year. Nominations are being sought for 20 open Committee seats. Members can serve up to 3 terms for a total of 6 consecutive years. The Chairperson of the Committee shall be elected by members to serve a 1-year term.

Equal opportunity practices, in line with USDA policies, will be followed in all membership appointments to the Committee. To ensure that the recommendations of the Committee have taken into account the needs of the diverse groups served by USDA, membership shall include, to the extent practicable, individuals with demonstrated ability to represent minorities, women, and persons with disabilities.

The duties of the Committee are solely advisory. The Committee will make recommendations to the Secretary of Agriculture with regards to the agricultural statistics program of NASS, and such other matters as it may deem advisable, or which the Secretary of Agriculture; Under Secretary for Research, Education, and Economics; or

the Administrator of NASS may request. The Committee will meet at least annually. All meetings are open to the public. Committee members are reimbursed for official travel expenses only.

Send questions, comments, and requests for additional information to the e-mail address, fax number, or address listed above.

Signed at Washington, DC, May 25, 2010.

Joseph T. Reilly,

Associate Administrator, National Agricultural Statistics Service.

[FR Doc. 2010–14843 Filed 6–18–10; 8:45 am]

BILLING CODE 3410–20–P

DEPARTMENT OF AGRICULTURE

Forest Service

Uinta-Wasatch-Cache National Forest Resource Advisory Committee

AGENCY: Forest Service, USDA.

ACTION: Notice of meeting.

SUMMARY: The Uinta-Wasatch-Cache National Forest Resource Advisory Committee will meet in Salt Lake City, Utah. The committee is meeting as authorized under the Secure Rural Secure Schools and Community Self-Determination Act (Pub. L. 110–343) and in compliance with the Federal Advisory Committee Act. The purpose is to hold the first meeting of the newly formed committee.

DATES: The meeting will be held on June 29, 2010, from 3 p.m. to 7 p.m.

ADDRESSES: The meeting will be held at the Salt Lake County Government Center, Room S1002, 2001 South State Street, Salt Lake City, UT. Written comments should be sent to Loyal Clark, Uinta-Wasatch-Cache National Forest, 88 West 100 North, Provo, UT 84601. Comments may also be sent via e-mail to *lfclark@fs.fed.us,* via facsimile to 801–342–5144.

All comments, including names and addresses when provided, are placed in the record and are available for public inspection and copying. The public may inspect comments received at the Uinta-Wasatch-Cache National Forest, 88 West 100 North, Provo, UT 84601.

FOR FURTHER INFORMATION CONTACT: Loyal Clark, RAC Coordinator, USDA, Uinta-Wasatch-Cache National Forest, 88 West 100 North, Provo, UT 84601; 801–342–5117; *lfclark@fs.fed.us.*

SUPPLEMENTARY INFORMATION: The meeting is open to the public. The following business will be conducted: (1) Introductions of all committee members, replacement members and Forest Service personnel; (2) Selection of a chairperson by the committee members; (3) Receive materials explaining the process for considering and recommending Title Il projects; and (4) Public comment. Persons who wish to bring related matters to the attention of the Committee may file written statements with the Committee staff before or after the meeting.

Dated: June 15, 2010.

Cheryl Probert,

Designated Federal Officer.

[FR Doc. 2010–14891 Filed 6–18–10; 8:45 am]

BILLING CODE M

DEPARTMENT OF AGRICULTURE

Forest Service

New Mexico Collaborative Forest Restoration Program Technical Advisory Panel

AGENCY: Forest Service, USDA.

ACTION: Notice of meeting.

SUMMARY: The New Mexico Collaborative Forest Restoration Program Technical Advisory Panel will meet in Albuquerque, New Mexico. The purpose of the meeting is to provide recommendations to the Regional Forester, USDA Forest Service Southwestern Region, on which forest restoration grant proposals submitted in response to the Collaborative Forest Restoration Program Request For Applications best meet the objectives of the Community Forest Restoration Act (Title VI, Pub. L. 106–393).

DATES: The meeting will be held July 19–23, 2010, beginning at 10 a.m. on Monday, July 19 and ending at approximately 4 p.m. on Friday, July 23.

ADDRESSES: The meeting will be held at the Hyatt Place Albuquerque/Uptown, 6901 Arvada Avenue, NE., Albuquerque, NM 87110, (505) 872–9000. Written comments should be sent to Walter Dunn, at the Cooperative and International Forestry Staff, USDA Forest Service, 333 Broadway SE., Albuquerque, NM 87102. Comments may also be sent via e-mail to *wdunn@fs.fed.us,* or via facsimile to Walter Dunn at (505) 842–3165. All comments, including names and addresses when provided, are placed in the record and are available for public inspection and copying. The public may inspect comments received at the Cooperative and International Forestry Staff, USDA Forest Service, 333 Broadway SE., Albuquerque, or during the Panel meeting at the Hyatt Place Albuquerque/Uptown, 6901 Arvada Avenue, NE., Albuquerque, NM 87110, (505) 872–9000.

FOR FURTHER INFORMATION CONTACT: Walter Dunn, Assistant Designated Federal Official, at (505) 842–3425, or Alicia San Gil, at (505) 842–3289, Cooperative and International Forestry Staff, USDA Forest Service, 333 Broadway SE., Albuquerque, NM 87102.

Individuals who use telecommunication devices for the deaf (TDD) may call the Federal Information Relay Service (FIRS) at 1–800–877–8339 between 8 a.m. and 8 p.m., Eastern Standard Time, Monday through Friday.

SUPPLEMENTARY INFORMATION: The meeting is open to the public. Panel discussion is limited to Forest Service staff and Panel members. However, project proponents may respond to questions of clarification from Panel members or Forest Service staff. Persons who wish to bring Collaborative Forest Restoration Program grant proposal review matters to the attention of the Panel may file written statements with the Panel staff before or after the meeting. Public input sessions will be provided and individuals who submitted written statements prior to the public input sessions will have the opportunity to address the Panel at those sessions.

Dated: May 28, 2010.

Corbin L. Newman, Jr.,

Regional Forester.

[FR Doc. 2010–14762 Filed 6–18–10; 8:45 am]

BILLING CODE 3410–11–M

DEPARTMENT OF AGRICULTURE

National Agricultural Statistics Service

Notice of Opportunity To Submit Content Request for the Agricultural Energy Program Surveys

AGENCY: National Agricultural Statistics Service.

ACTION: Notice and request for stakeholder input.

SUMMARY: The National Agricultural Statistics Service (NASS) is currently conducting the 2009 On-farm Renewable Energy Production (OREP) survey as a follow-on to the 2007 Census of Agriculture. Respondents who answered that they generated energy or electricity in 2007 are eligible for the follow-on survey to determine types of selected energy produced and associated information. NASS is currently accepting stakeholder feedback on future energy related topics and questionnaire content for development of an annual agricultural energy survey.

DATES: Comments on this notice must be received by August 2, 2010 to be assured of consideration.

ADDRESSES: Requests *must* address items listed in the Supplementary Information section below. Please submit requests online at: *http://www.nass.usda.gov/energysurvey/* or via mail to: USDA–NASS, Energy Content Team, P.O. Box 27767, Raleigh, NC 27611; or fax to: 919–856–4139. If you have any questions, send an *e-mail to: energyteam@nass.usda.gov* or call 1–800–727–9540.

FOR FURTHER INFORMATION CONTACT: Joseph T. Reilly, Associate Administrator, National Agricultural Statistics Service, U.S. Department of Agriculture, (202) 720–4333, Fax: 202–720–9013, or *e-mail to: HQ_OA@nass.usda.gov.*

SUPPLEMENTARY INFORMATION: The current On-Farm Renewable Energy Production survey is being conducted as a follow-on survey to the 2007 Census of Agriculture. In future years, annual surveys will measure changes within this sector of the farming industry and address other critical agricultural issues related to energy production and use. NASS is seeking input on ways to improve future surveys and ensure that new data collections address appropriate topics. Current plans for the expanded annual energy survey, including a link to the 2009 On-Farm Renewable Energy Production survey questionnaire, may be viewed on-line at: *http://www.nass.usda.gov/energysurvey/.* Click on "Review energy program plans".

Recommendations which propose new questions for NASS's annual Agricultural Energy Program in the future must address the following justification categories:

1. What data are needed?
2. Why are the data needed?
3. At what geographic level are the data needed? (U.S., State, County, other)
4. Who will use these data?
5. What decisions will be influenced with these data?
6. What surveys have used the proposed question before; what testing has been done on the question; and what is known about its reliability and validity.
7. Draft of the recommended question.

All responses to this notice will become a matter of public record and be summarized and considered by NASS in preparing the survey questionnaires for OMB approval.

Signed at Washington, DC, June 3, 2010.

Joseph T. Reilly,

Associate Administrator.

[FR Doc. 2010–14842 Filed 6–18–10; 8:45 am]

BILLING CODE 3410–20–P

DEPARTMENT OF AGRICULTURE

Natural Resources Conservation Service

Notice of Proposed Change to Section IV of the Virginia State Technical Guide

AGENCY: Natural Resources Conservation Service (NRCS), U.S. Department of Agriculture.

ACTION: Notice of availability of proposed changes in the Virginia NRCS State Technical Guide for review and comment.

SUMMARY: It has been determined by the NRCS State Conservationist for Virginia that changes must be made in the NRCS State Technical Guide specifically in the following practice standards: #386, Field Border, #393, Filter Strip, and #655, Forest Trails and Landings. These practices will be used to plan and install conservation practices.

DATES: Comments will be received for a 30-day period commencing with this date of publication.

FOR FURTHER INFORMATION CONTACT: John A. Bricker, State Conservationist, Natural Resources Conservation Service (NRCS), 1606 Santa Rosa Road, Suite 209, Richmond, Virginia 23229–5014; Telephone number (804) 287–1691; Fax number (804) 287–1737. Copies of the practice standards will be made available upon written request to the address shown above or on the Virginia NRCS Web site: *http://www.va.nrcs.usda.gov/technical/draftstandards.html.*

SUPPLEMENTARY INFORMATION: Section 343 of the Federal Agriculture Improvement and Reform Act of 1996 states that revisions made after enactment of the law to NRCS State technical guides used to carry out highly erodible land and wetland provisions of the law shall be made available for public review and comment. For the next 30 days, the NRCS in Virginia will receive comments relative to the proposed changes. Following that period, a determination will be made by the NRCS in Virginia regarding disposition of those comments and a final determination of change will be made to the subject standards.

Dated: June 9, 2010.

John A. Bricker,

State Conservationist, Natural Resources Conservation Service, Richmond, Virginia.

[FR Doc. 2010–14846 Filed 6–18–10; 8:45 am]

BILLING CODE 3410–16–P

DEPARTMENT OF COMMERCE

International Trade Administration

[C–570–966]

Drill Pipe From the People's Republic of China: Alignment of Final Countervailing Duty Determination With Final Antidumping Duty Determination

AGENCY: Import Administration, International Trade Administration, Department of Commerce.

SUMMARY: The Department of Commerce (the Department) is aligning the final determination in the countervailing duty investigation of drill pipe from the People's Republic of China (PRC) with the final determination in the companion antidumping duty investigation.

DATES: *Effective Date:* June 21, 2010.

FOR FURTHER INFORMATION CONTACT: Kristen Johnson or Eric Greynolds, AD/CVD Operations, Office 3, Import Administration, U.S. Department of Commerce, Room 4014, 14th Street and Constitution Avenue, NW., Washington, DC 20230; *telephone:* (202) 482–4793 and (202) 482–6071, respectively.

Background

On January 20, 2010, the Department initiated the countervailing and antidumping duty investigations on drill pipe from the PRC. *See Drill Pipe From the People's Republic of China: Initiation of Countervailing Duty Investigation,* 75 FR 4345 (January 27, 2010), and *Drill Pipe From the People's Republic of China: Initiation of Antidumping Duty Investigation,* 75 FR 4531 (January 28, 2010). The countervailing and antidumping duty investigations have the same scope with regard to the subject merchandise covered.

On June 9, 2010, the petitioners [1] submitted a letter, pursuant to 19 CFR 351.210(b)(4), requesting alignment of the final countervailing duty determination with the final determination in the companion

[1] Petitioners are VAM Drilling USA, Inc., Texas Steel Conversions, Inc., Rotary Drilling Tools, TMK IPSCO, and United Steel, Paper and Forestry, Rubber, Manufacturing, Energy, Allied Industrial and Service Workers International Union, AFL–CIO–CLC.

antidumping duty investigation of drill pipe from the PRC. On June 11, 2010, the Department published the preliminary affirmative countervailing duty determination on drill pipe from the PRC. *See Drill Pipe From the People's Republic of China: Preliminary Affirmative Countervailing Duty Determination,* 75 FR 33245 (June 11, 2010).

Therefore, in accordance with section 705(a)(1) of the Tariff Act of 1930, as amended (the Act), and 19 CFR 351.210(b)(4), we are aligning the final countervailing duty determination on drill pipe from the PRC with the final determination in the companion antidumping duty investigation of drill pipe from the PRC. The final countervailing duty determination will be issued on the same date as the final antidumping duty determination currently scheduled for October 19, 2010.

This notice is issued and published pursuant to sections 705(a)(1) and 771(i) of the Act.

Dated: June 16, 2010.

Paul Piquado,

Acting Deputy Assistant Secretary for Import Administration.

[FR Doc. 2010–14935 Filed 6–18–10; 8:45 am]

BILLING CODE 3510–DS–P

DEPARTMENT OF COMMERCE

National Oceanic and Atmospheric Administration

RIN 0648–XX00

Notice of Estuary Habitat Restoration Council's Intent to Revise its Estuary Habitat Restoration Strategy; Request for Public Comment

AGENCY: National Marine Fisheries Service (NMFS), National Oceanic and Atmospheric Administration (NOAA), Commerce.

ACTION: Notice; request for comments.

SUMMARY: NOAA, on behalf of the interagency Estuary Habitat Restoration Council, is providing notice of the Council's intent to revise the ''Estuary Habitat Restoration Strategy" and requesting public comments to guide its revision.

DATES: Comments and information must be received by July 21, 2010.

ADDRESSES: Send comments to Estuary Habitat Restoration Strategy, NOAA Fisheries Service, 1315 East-West Highway, Room 14730, Silver Spring, MD 20910. Electronic comments may be submitted to *estuaryrestorationact@noaa.gov*. NOAA is not responsible for e-mail comments sent to addresses other than the one provided here. Comments should be in one of the following formats: Word or Word Perfect. The subject line for submission of comments should begin with "Estuary Habitat Restoration Strategy comments from [insert name of agency, organization, or individual]." Comments sent via e-mail, including all attachments, must not exceed a 10–megabyte file size.

All comments received are a part of the public record and may be posted to *http://era.noaa.gov* without change. All Personal Identifying Information (for example, name, address, etc.) voluntarily submitted by the commenter may be publicly accessible. Do not submit Confidential Business Information or otherwise sensitive or protected information.

A copy of the strategy and other documents related to the proposed revision may be obtained by writing to the address specified above, telephoning the contact listed below (see **FOR FURTHER INFORMATION CONTACT**), or visiting *http://era.noaa.gov*.

FOR FURTHER INFORMATION CONTACT: Jenni Wallace, NOAA Fisheries Service, Silver Spring, MD, 301–713–0174.

SUPPLEMENTARY INFORMATION: The Estuary Restoration Act of 2000, title I of Pub. L. 106–457, as amended by Section 5017 of the Water Resources Development Act of 2007, Pub. L. 110–114, has four purposes: (1) promotion of estuary habitat restoration; (2) development of a national strategy for creating and maintaining effective estuary habitat restoration partnerships; (3) provision of Federal assistance for estuary habitat restoration projects; and (4) development and enhancement of monitoring and research capabilities to ensure that estuary habitat restoration efforts are based on sound scientific understanding and innovative technologies.

The Estuary Habitat Restoration Council, consisting of representatives from Department of the Army, National Oceanic and Atmospheric Administration, the Environmental Protection Agency, United States Fish and Wildlife Service, and the Department of Agriculture, was established to oversee implementation of the Act.

The Council was charged with developing an estuary habitat restoration strategy designed to ensure a comprehensive approach to maximize benefits and foster coordination of Federal and non-Federal activities. Elements of the strategy are discussed in section 106(d) of the Act.

In December 2002, the Estuary Habitat Restoration Council published the Final Estuary Habitat Restoration Strategy (67 FR 71942). Section 106(f) of the Act authorizes the Council to periodically review and update the estuary habitat restoration strategy. The Council is initiating the process for revising the strategy. The intent of this notice is to notify the public of the Council's intent to revise the strategy and obtain comments to guide that revision. Consistent with Section 106(e) of the Estuary Restoration Act, the Council will provide additional opportunity for the public to review and comment on a draft revised strategy once it is prepared.

Although the Estuary Restoration Act lists a number of issues that must be addressed in the strategy, the Council is interested in aligning the strategy with the Ocean Policy task force goals and in identifying focus areas for the estuary habitat restoration strategy, such as: climate adaptation restoration, socio-economic benefits of estuary habitat restoration, and geographic restoration prioritization.

The Council is not seeking comments on a revised estuary habitat restoration strategy at this time. The intent of this notice is to solicit ideas that may be incorporated into a revised estuary habitat restoration strategy. The Council will use comments obtained in response to this notice to guide its development of a draft revised strategy. It intends to prepare a draft revised estuary habitat restoration strategy in the fall of 2010 and, in accordance with Section 106(e) of the Estuary Restoration Act of 2000, make it available for public review and comment. After reviewing public comments on the draft, the Council intends to draft and release a final revised estuary habitat restoration strategy in early 2011.

Authority: 16 U.S.C. 2905(e)

Dated: June 15, 2010.

Patricia A. Montanio,

Director, Office of Habitat Conservation, National Marine Fisheries Service.

[FR Doc. 2010–14976 Filed 6–18–10; 8:45 am]

BILLING CODE 3510–22–S

DEPARTMENT OF COMMERCE

International Trade Administration

A–549–822

Certain Frozen Warmwater Shrimp from Thailand: Notice of Extension of Time Limit for the Final Results of the 2008–2009 Administrative Review

AGENCY: Import Administration, International Trade Administration, Department of Commerce.

FOR FURTHER INFORMATION CONTACT: Kate Johnson at (202) 482–4929, or David Goldberger at (202) 482–4136, AD/CVD Operations, Office 2, Import Administration, International Trade Administration, U.S. Department of Commerce, 14th Street and Constitution Avenue, N.W., Washington, D.C. 20230.

Background

On March 15, 2010, the Department of Commerce (the Department) published the preliminary results of the administrative review of the antidumping duty order on certain frozen warmwater shrimp from Thailand covering the period February 1, 2008, through January 31, 2009. *See Certain Frozen Warmwater Shrimp from Thailand: Preliminary Results of Antidumping Duty Administrative Review and Final Results of Partial Rescission of Antidumping Duty Administrative Review*, 75 FR 12188 (March 15, 2010). The final results for this administrative review are currently due no later than July 13, 2010, 120 days from the date of publication of the preliminary results of review.

Extension of Time Limit for the Final Results

Section 751(a)(3)(A) of the Tariff Act of 1930, as amended (the Act), requires the Department to issue the final results of an administrative review within 120 days after the date on which the preliminary results are published. If it is not practicable to complete the review within that time period, section 751(a)(3)(A) of the Act allows the Department to extend the deadline for the final results to a maximum of 180 days after the date on which the preliminary results are published.

The Department requires additional time to complete this review in order to properly consider the numerous and complex issues raised by interested parties in their case briefs (e.g., cooked form model matching product characteristic and CEP offset). Thus, it is not practicable to complete this review within the original time limit. Therefore, the Department is extending the time limit for completion of the final results of this review by 60 days, in accordance with section 751(a)(3)(A) of the Act. Because September 11, 2010, falls on a Saturday, the new deadline for the final results will be September 13, 2010.

We are issuing and publishing this notice in accordance with sections 751(a)(1) and 777(i)(1) of the Act.

Dated: June 15, 2010.

John M. Andersen,

Acting Deputy Assistant Secretary for Antidumping and Countervailing Duty Operations.

[FR Doc. 2010–14958 Filed 6–18–10; 8:45 am]

BILLING CODE S

DEPARTMENT OF COMMERCE

International Trade Administration

[A–570–831]

Fresh Garlic from the People's Republic of China: Final Results and Partial Rescission of the 14th Antidumping Duty Administrative Review

AGENCY: Import Administration, International Trade Administration, Department of Commerce.

SUMMARY: On December 8, 2009, the Department of Commerce (Department) published in the **Federal Register** its preliminary results of administrative review of the antidumping duty order on fresh garlic from the People's Republic of China (PRC) covering the period of review (POR) of November 1, 2007, through October 31, 2008. *See Fresh Garlic from the People's Republic of China: Preliminary Results of, and Intent to Rescind, in Part, the Antidumping Duty Administrative Review,* 74 FR 64677 (December 8, 2009) (*Preliminary Results*). Following the *Preliminary Results,* we provided interested parties with an opportunity to comment on the *Preliminary Results.* Our analysis of the comments submitted and information received did not lead to any changes in the *Preliminary Results.* Therefore, the final results do not differ from the *Preliminary Results.*

As discussed below, the Department is applying total adverse facts available (AFA) to the six mandatory respondents who each failed to cooperate to the best of its ability in this proceeding. These mandatory respondents are Anqiu Friend Food Co., Ltd. (Anqiu Friend), Jining Trans-High Trading Co., Ltd. (Jining Trans-High), Qingdao Saturn International Trade Co., Ltd. (Qingdao Saturn), Shenzhen Fanhui Import & Export Co., Ltd. (Shenzhen Fanhui), Jinxiang Tianma Freezing Storage Co., Ltd. (Tianma Freezing), and Weifang Shennong Foodstuff Co., Ltd. (Weifang Shennong). The Department also finds that eleven companies subject to this review,[1] including mandatory respondents Shanghai Ever Rich Trade Company (Shanghai Ever Rich), Jining Trans-High, Qingdao Saturn, and Shenzhen Fanhui did not demonstrate their eligibility for separate rate status. *See* Appendix 2. In addition, the Department grants a separate rate to the four fully-cooperative non-selected respondents which demonstrated their eligibility for separate rate status. For the rates assigned to each of these companies, see the "Final Results of Review" section of this notice. Finally, the Department is also rescinding the review with respect to one exporter who timely submitted a "no shipment" certification. *See* "Final Partial Rescission of Administrative Review" section of this notice.

DATES: *Effective Date:* June 21, 2010.

FOR FURTHER INFORMATION CONTACT: Scott Lindsay, AD/CVD Operations, Office 6, Import Administration, International Trade Administration, U.S. Department of Commerce, 14th Street and Constitution Avenue, NW., Washington DC 20230; *telephone:* (202) 482–0780.

SUPPLEMENTARY INFORMATION:

Background

On December 8, 2009, the Department published in the **Federal Register** the preliminary results of the 14th AR of the antidumping duty order on fresh garlic from the PRC. *See Preliminary Results.* Since the *Preliminary Results,* the following events have occurred.

On January 5, 2010, the Department notified parties that case briefs were due January 11, 2010. On January 14, 2010, the Department extended the deadlines for rebuttal briefs to January 25, 2010. On January 11, 2010, Shenzhen Greening Trading Company Ltd. (Greening) and Jinan Yipin Corporation Ltd. (Jinan Yipin) submitted their respective case briefs. Also on January 11, 2010, Qingdao Xintianfeng Foods Co., Ltd. (Qingdao Xintianfeng) and Weifang Hongqiao International Logistic Co., Ltd. (Weifang Hongqiao) and the following interested parties: Anqiu Friend Food Co., Ltd., Anqiu Haoshun Trade Co., Ltd., Jinxiang Dongyun Freezing Storage Co., Ltd., Juye Homestead Fruits and Vegetables Co., Ltd., Qingdao Tiantaixing Foods Co., Ltd., Qufu Dongbao Import & Export Trade Co., Ltd., Shandong Chenhe International Trading Co., Ltd.,

[1] A full list of companies subject to this review is provided in Appendix 3.

Shandong Longtai Fruits and Vegetables Co., Ltd., Shenzhen Fanhui Import and Export Co., Ltd., Shenzhen Sunny Import & Export Co., Ltd. and Weifang Shennong Foodstuff Co., Ltd. (collectively as "Interested Parties"), submitted their case brief.[2] On January 25, 2010, the Fresh Garlic Producers Association (FGPA) and its individual members (Christopher Ranch LLC, the Garlic Company, Valley Garlic, and Vessey and Company, Inc.) (collectively, Petitioners) filed their rebuttal brief. On February 25, 2010, the Department held a public hearing.

On March 19, 2010, Department officials met with Jinan Yipin's counsel to discuss issues related to the briefs. *See* Memorandum for the File from Scott Lindsay, Case Analyst, AD/CVD Operations, Office 6, Meeting with Counsel for Jinan Yipin Corporation Ltd.: Fresh Garlic from the People's Republic of China (March 19, 2010).

On April 8, 2010, the Department extended the time limit for completion of the final results of this administrative review by 30 days. *See Fresh Garlic from the People's Republic of China: Extension of Time Limits for Final Results of the Antidumping Duty Administrative Review,* 75 FR 19364 (April 14, 2010). On May 11, 2010, the Department extended the time limit for completion of the final results of this administrative review by an additional 30 days. *See Fresh Garlic from the People's Republic of China: Extension of Time Limits for Final Results of the Antidumping Duty Administrative Review,* 75 FR 29314 (May 25, 2010).

Scope of the Order

The products covered by this order are all grades of garlic, whole or separated into constituent cloves, whether or not peeled, fresh, chilled, frozen, provisionally preserved, or packed in water or other neutral substance, but not prepared or preserved by the addition of other ingredients or heat processing. The differences between grades are based on color, size, sheathing, and level of decay. The scope of this order does not include the following: (a) Garlic that has been mechanically harvested and that is primarily, but not exclusively, destined for non-fresh use; or (b) garlic that has been specially prepared and cultivated prior to planting and then harvested and otherwise prepared for use as seed. The subject merchandise is used principally as a food product and for seasoning. The subject garlic is currently classifiable under subheadings 0703.20.0010, 0703.20.0020, 0703.20.0090, 0710.80.7060, 0710.80.9750, 0711.90.6000, and 2005.90.9700 of the Harmonized Tariff Schedule of the United States (HTSUS).

Although the HTSUS subheadings are provided for convenience and customs purposes, our written description of the scope of this order is dispositive. In order to be excluded from the Order, garlic entered under the HTSUS subheadings listed above that is (1) mechanically harvested and primarily, but not exclusively, destined for non-fresh use or (2) specially prepared and cultivated prior to planting and then harvested and otherwise prepared for use as seed must be accompanied by declarations to CBP to that effect.

Analysis of Comments Received

Issues raised in the case and rebuttal briefs by parties to this proceeding and to which we have responded are listed in Appendix 1 to this notice and addressed in the Memorandum To: Ronald K. Lorentzen, Deputy Assistant Secretary for Import Administration, From: John M. Andersen, Acting Deputy Assistant Secretary for Antidumping and Countervailing Duty Operations, Subject: Fresh Garlic from the People's Republic of China: Issues and Decision Memorandum for the Final Results of the Fourteenth Antidumping Duty Administrative Review, dated June 14, 2010 (Issues and Decision Memorandum), which is hereby adopted by this notice. Parties can find a complete discussion of the issues raised in this administrative review and the corresponding recommendations in this public memorandum, which is on file in the Central Records Unit (CRU), Room 1117 of the main Department building. In addition, a copy of the Issues and Decision Memorandum can be accessed directly on our Web site at *http://ia.ita.doc.gov/frn.* The paper copy and electronic version of the Issues and Decision Memorandum are identical in content.

Final Partial Rescission of Administrative Review

In the *Preliminary Results,* the Department announced its intent to rescind the administrative review with respect to Jining Yongjia Trade Co., Ltd. (Jining Yongjia). In accordance with the instructions in the *Initiation Notice,* Jining Yongjia timely certified that it had no shipments of subject merchandise to the United States during the POR. *See Preliminary Results,* 74 FR at 64679; *see also Initiation of Antidumping and Countervailing Duty Administrative Reviews and Requests for Revocation in Part,* 73 FR 79055 (Dec. 24, 2008) (*Initiation Notice*). We confirmed Jining Yongjia's claim by issuing a no-shipment inquiry to CBP and examining electronic CBP data. Our examination of shipment data from CBP for Jining Yongjia indicated that there were no entries of subject merchandise which they exported during the POR. *Id.* We received no response from CBP regarding our no-shipment inquiry, which corroborates Jining Yongjia's no-shipment certification. No other parties commented on our preliminary intent to rescind. Thus, there is no information or argument on the record of the current review that warrants reconsidering our preliminary decision to rescind. Therefore, we are rescinding this administrative review with respect to Jining Yongjia.

Separate Rates

In the *Initiation Notice,* the Department instructed all named firms that wished to qualify for separate rate status in the instant administrative review to complete, as appropriate, either a separate-rate certification or a separate-rate application, due no later than 30 or 60 calendar days, respectively, after publication of the *Initiation Notice. See Initiation Notice,* 73 FR at 79056. As noted in the *Preliminary Results,* Anqiu Friend, Henan Weite Industrial Co. Ltd. (Henan Weite), Qingdao Xintianfeng, Shanghai LJ, Tianma Freezing, Weifang Hongqiao, and Weifang Shennong each timely submitted separate-rate documentation. Based on our analyses of this information, the Department preliminarily found that Henan Weite, Shanghai LJ, Anqiu Friend, Jinxiang Tianma, Qingdao Xintianfeng, Weifang Hongqiao, and Weifang Shennong each has established, *prima facie,* that it qualified for separate rates under the criteria established by *Silicon Carbide* and *Sparklers.* There is no information on the record to warrant reconsideration of these findings. As such, the Department has found that each of these seven companies has demonstrated that it qualifies for separate rates status.

The per-unit separate rate to be applied to Henan Weite, Qingdao Xintianfeng, Shanghai LJ, and Weifang Hongqiao is discussed in the "Selection of Rate Applicable to Fully Cooperative

[2] On October 21, 2009, the Department rescinded the administrative review of forty-three companies. *See Fresh Garlic from the People's Republic of China: Partial Rescission of Antidumping Duty Administrative Review,* 74 FR 54029 (Oct. 21, 2009). The Department's rescission included the rescission of Shenzhen Xinboda Industrial Co., Ltd. (Xinboda) which Interested Parties commented upon in a letter to the Department on November 18, 2009. The Interested Parties further commented upon the Department's rescission of Xinboda in their case brief. For a complete discussion of this issue, see Comment 5 of the Issues and Decision Memorandum.

Non-Selected Respondents That Qualify for a Separate Rate" section, below. The per-unit separate rate to be applied to Anqiu Friend, Tianma Freezing, and Weifang Shennong is discussed in the "Application of Facts Available" section, below.[3] As discussed in the *Preliminary Results,* the Department found that because Shanghai Ever Rich, Jining Trans-High, Qingdao Saturn, and Shenzhen Fanhui, mandatory respondents, and seven other companies subject to the review did not file timely separate rate certifications or applications, they were part of the PRC-wide entity. There is no information on the record of this review that warrants reconsideration of these findings. As such, the Department has found that these eleven companies are part of the PRC-wide entity. *See* Appendix 2.

Selection of Rate Applicable to Fully Cooperative Non-Selected Respondents That Qualify for a Separate Rate

In the *Preliminary Results,* the Department assigned the separate rate per-unit margin calculated in *06/07 Administrative Review* (*i.e.,* the separate rate calculated in the most recently completed administrative review of fresh garlic from the PRC) to the four cooperative separate rate respondents not selected for individual examination that qualified for a separate rate (*i.e.* Henan Weite, Qingdao Xintianfeng, Shanghai LJ, and Weifang Hongqiao). *See* Memorandum from Nicholas Czajkowski, Case Analyst, Office 6, Re: Final Results of the Administrative Review of Fresh Garlic from the People's Republic of China: Separate Rate Companies and PRC-Wide Entity—Per-Unit Assessment Rates (June 8, 2009) (Per Unit Memorandum) placed on the record of this review concurrent with these preliminary results.

The Department received a case brief from Qingdao Xintianfeng and Weifang Hongqiao and a rebuttal brief from Petitioners addressing issues related to what per-unit separate rate to apply to four non-selected cooperating respondents. These comments are discussed fully in the Issues and Decision Memorandum. We have not changed the per-unit separate rate to be applied to the four non-selected cooperating respondents. When dealing with the situation where there are no calculated rates in the administrative review to apply to the separate rate companies, the Department has determined that a reasonable method is to assign to non-reviewed companies the most recent rate individually calculated for such non-selected companies, unless we calculated in a more recent segment a rate for any company that was not zero, *de minimis,* or based entirely on FA, in which case we would assign the more recent rate, or average of such more recent rates, as the case may be. *See Certain Frozen Warmwater Shrimp from the Socialist Republic of Vietnam: Final Results and Final Partial Rescission of Antidumping Duty Administrative Review,* 74 FR 47191 (September 15, 2009). Further, the Department has found this same methodology to be "reasonable because it is reflective of the commercial behavior demonstrated by exporters of the subject merchandise during a recent period of time." *See Certain Frozen Warmwater Shrimp from the Socialist Republic of Vietnam: Final Results and Final Partial Rescission of Antidumping Duty Administrative Review,* 73 FR 52273 (September 9, 2008) and the accompanying Issues and Decisions Memorandum at Comment 6. Therefore, for these final results, we continue to apply the separate rate per-unit margin calculated in *06/07 Administrative Review* to the four non-selected fully cooperative respondents.

Application of Adverse Facts Available

Subsequent to their submission of separate rate documentation, the Department selected Anqiu Friend, Tianma Freezing, and Weifang Shennong as mandatory respondents. In the *Preliminary Results,* the Department found that each of these companies failed to cooperate to the best of its ability in the review as a whole. Tianma Freezing did not respond to our questionnaire and Anqiu Friend and Weifang Shennong each provided incomplete and unverifiable sales, cost, and factors of production data. The Department also stated that mandatory respondents must respond to all the information that has been requested by the Department and not selectively choose which requests to respond to or which information to submit. *See Preliminary Results.*

In the *Preliminary Results,* the Department determined that an inference that is adverse to the interests of Anqiu Friend, Tianma Freezing, and Weifang Shennong was warranted. No new information has been placed on the record which warrants reconsideration of this determination. Therefore, for these final results, as AFA the Department is assigning Anqiu Friend, Tianma Freezing, and Weifang Shennong the per kilogram rate of $4.71 calculated in the *06/07 Administrative Review. See* Per Unit Memorandum.

As noted in the *Preliminary Results,* Qingdao Saturn, Jining Trans-High, and Shenzhen Fanhui did not timely file separate rate documentation prior to their selection as mandatory respondents. Jining Trans-High and Shenzhen Fanhui did not respond to our questionnaire and Qingdao Saturn provided incomplete and unverifiable sales, cost, and factors of production data. The Department preliminarily found that there was no basis upon which to find that any of these three companies were eligible for separate rate status, and thus they were part of the PRC-wide entity. Accordingly, the PRC-wide entity, which includes these three companies, is under review. We further found that the PRC-wide entity, of which these companies are a part, failed to cooperate by not acting to the best of its ability.

No information on the record of this review warrants reconsideration of these findings. Therefore, for these final results, the Department has determined that the PRC-wide entity did not participate fully in this proceeding, and that in selecting from among the facts otherwise available, an adverse inference is warranted for the PRC-wide entity, pursuant to section 776(b) of the Act. For these final results, as AFA, the Department is assigning the PRC-wide entity the per kilogram rate of $4.71 calculated in the *06/07 Administrative Review. See* Per Unit Memorandum.

Corroboration of Secondary Information Used as Adverse Facts Available

Section 776(c) of the Act provides that, where the Department selects from among the facts otherwise available and relies on "secondary information," the Department shall, to the extent practicable, corroborate that information from independent sources reasonably at the Department's disposal. Secondary information is described in the SAA as "information derived from the petition

[3] In the instant case, Anqiu Friend, Tianma Freezing, and Weifang Shennong each timely submitted certain information related to their separate rate status. However, the Department selected each company as a mandatory respondent. As mandatory respondents, each company failed to cooperate to the best of its ability in the review as a whole either because it did not submit its sales and factors of production information, or because it submitted incomplete and unverifiable sales and factors of production data. However, because the Department did not notify Anqiu Friend, Tianma Freezing, and Weifang Shennong in advance of submission of the separate rate information that a respondent would not qualify for separate rate status if it failed to cooperate to the best of its ability throughout the investigation and/or review, Anqiu Friend, Tianma Freezing, and Weifang Shennong will keep their separate rate status. *See e.g., Amended Final Results of Antidumping Duty Administrative Review and New Shipper Reviews: Wooden Bedroom Furniture from the People's Republic of China,* 72 FR 46957 (August 22, 2007) and accompanying Issues and Decision Memorandum at Comment 43.

that gave rise to the investigation or review, the final determination covering the subject merchandise, or any previous review under section 751 concerning the subject merchandise." *See* Statement of Administrative Action accompanying the Uruguay Round Agreements Act, H.R. Doc. No. 103–316, vol. 1 (1994) (SAA) at 870. The SAA states that "corroborate" means to determine that the information used has probative value. *Id.* The Department has determined that to have probative value, information must be reliable and relevant. *See, e.g., Tapered Roller Bearings and Parts Thereof, Finished and Unfinished, From Japan, and Tapered Roller Bearings Four Inches or Less in Outside Diameter, and Components Thereof, from Japan; Preliminary Results of Antidumping Duty Administrative Reviews and Partial Termination of Administrative Reviews,* 61 FR 57391, 57392 (November 6, 1996) (unchanged in final results). The SAA also states that independent sources used to corroborate such evidence may include, for example, published price lists, official import statistics and customs data, and information obtained from interested parties during the particular investigation or review. *See* SAA at 870; *see also Notice of Preliminary Determination of Sales at Less Than Fair Value: High and Ultra-High Voltage Ceramic Station Post Insulators from Japan,* 68 FR 35627, 35629 (June 16, 2003) (unchanged in final determination); and *Notice of Final Determination of Sales at Less Than Fair Value: Live Swine From Canada,* 70 FR 12181, 12183 (March 11, 2005).

To be considered corroborated, information must be found to be both reliable and relevant. Unlike other types of information, such as input costs or selling expenses, there are no independent sources for calculated dumping margins. The only sources for calculated margins are administrative determinations. The per-unit AFA rate we are applying for the current review was calculated using the *ad valorem* rate from the original investigation of garlic from the PRC. *See* Per Unit Memorandum. Furthermore, no information has been presented in the current review that calls into question the reliability of this information. Thus, the Department finds that the information is reliable.

With respect to the relevance aspect of corroboration, the Department will consider information reasonably at its disposal to determine whether a margin continues to have relevance. Where circumstances indicate that the selected margin is not appropriate as AFA, the Department will disregard the margin and determine an appropriate margin. *See, e.g., Fresh Cut Flowers From Mexico; Final Results of Antidumping Duty Administrative Review,* 61 FR 6812, 6814 (February 22, 1996). Similarly, the Department does not apply a margin that has been discredited. *See D&L Supply Co.* v. *United States,* 113 F.3d 1220, 1221 (Fed. Cir. 1997) (the Department will not use a margin that has been judicially invalidated). None of these unusual circumstances are present with respect to the rate being used here. Moreover, the rate selected, *i.e.* $4.71 per kilogram, is the rate currently applicable to the PRC-wide entity. The Department assumes that if an uncooperative respondent could have obtained a lower rate, it would have cooperated. *See Rhone Poulenc, Inc.* v. *United States,* 899 F. 2d 1185, 1190–91 (Fed. Cir. 1990); *Ta Chen Stainless Steel Pipe, Inc.* v. *United States,* 24 CIT 841, 848 (2000) (respondents should not benefit from failure to cooperate). As there is no information on the record of this review that demonstrates that this rate is not appropriate to use as AFA in the current review, we determine that this rate has relevance.

As this AFA rate is both reliable and relevant, we determine that it has probative value, and is thus in accordance with the requirement, under section 776(c) of the Act, that secondary information be corroborated to the extent practicable (*i.e.,* that it has probative value).

Final Results of Review

As a result of our review, we determine that the following margins exist for the period November 1, 2007 through October 31, 2008:

FRESH GARLIC FROM THE PRC 2007–2008 ADMINISTRATIVE REVIEW

Manufacturer/exporter	Weighted-average margin (dollars per kilogram)
Henan Weite Industrial Co., Ltd	1.03
Qingdao Xintianfeng Foods Co., Ltd	1.03
Shanghai LJ International Trading Co., Ltd	1.03
Weifang Hongqiao International Logistic Co., Ltd	1.03
Anqiu Friend Food Co., Ltd	4.71
Jinxiang Tianma Freezing Storage Co., Ltd	4.71
Weifang Shennong Foodstuff Co., Ltd	4.71
PRC-wide Entity (*see* Appendix 2)	4.71

Disclosure

We will disclose any memorandums used in our analysis to parties to these proceedings within five days of the date of publication of this notice. *See* 19 CFR 351.224(b).

Assessment Rates

Pursuant to 19 CFR 351.212(b), the Department will determine, and CBP shall assess, antidumping duties on all appropriate entries. For assessment purposes, where possible, the Department normally calculates importer-specific assessment rates for fresh garlic from the PRC. However, as discussed above, we are not calculating any company-specific antidumping duties in these final results. As such, it is not possible to calculate importer-specific assessment rates in this review. Rather, those companies demonstrating eligibility for a separate rate (Henan Weite, Qingdao Xintianfeng, Shanghai LJ, and Weifang Hongqiao) were assigned the most recently calculated per-unit separate rate, while Anqiu Friend, Tianma Freezing, and Weifang Shennong were assigned a separate rate based on total AFA. Other companies subject to review (discussed in detail above and listed in Appendix 2) are found to be part of the PRC-wide entity.

Consistent with the *06/07 Administrative Review,* we will direct CBP to assess a per-unit (*i.e.,* per kilogram) amount on each entry of the subject merchandise during the POR. In the *06/07 Administrative Review,* we calculated a per-unit assessment rate for separate rate companies, which is the same separate rate applicable in this review. *See* Per Unit Memorandum. This same per-unit assessment rate will be applied to subject merchandise exported by Henan Weite, Qingdao Xintianfeng, Shanghai LJ, or Weifang Hongqiao.

Also in the *06/07 Administrative Review,* we calculated per-unit assessment rates for the companies that were determined to be part of the PRC-wide entity. *See* Per Unit Memorandum. This is the highest per unit rate calculated in any segment of the proceeding and, as such, will be applied in this review to all companies that received a rate based on AFA, including the PRC-wide entity. (*See* Appendix 2). The Department intends to issue appropriate assessment instructions directly to CBP 15 days after publication of the final results of this review.

Cash Deposit Requirements

Consistent with *06/07 Administrative Review,* we will establish and collect a per-kilogram cash deposit amount

which will be equivalent to the company-specific dumping margins published in these final results of this review. Specifically, the following cash deposit requirements will be effective upon publication of the final results of this review for all shipments of the subject merchandise entered, or withdrawn from warehouse, for consumption on or after the publication date of the final results, as provided by section 751(a)(1) of the Act: (1) For subject merchandise exported by Henan Weite, Qingdao Xintianfeng, Shanghai LJ, or Weifang Hongqiao, the cash deposit rate will be the per-unit rate determined in the final results of the administrative review; (2) for subject merchandise exported by Anqiu Friend, Tianma Freezing, or Weifang Shennong the cash deposit rates will be the per-unit rate determined in the final results of the administrative review; (3) for subject merchandise exported by PRC exporters subject to this administrative review that have not been found to be entitled to a separate rate (*see* Appendix 2), the cash deposit rate will be the per-unit PRC-wide rate determined in the final results of administrative review; (4) for subject merchandise exported by all other PRC exporters of subject merchandise that have not been found to be entitled to a separate rate, the cash deposit rate will be the per-unit PRC-wide rate determined in the final results of administrative review; (5) for previously-investigated or previously-reviewed PRC and non-PRC exporters who received a separate rate in a prior segment of the proceeding (and which were not reviewed in this segment of the proceeding), the cash deposit rate will continue to be the rate assigned in that segment of the proceeding; (6) the cash deposit rate for non-PRC exporters of subject merchandise which have not received their own rate will be the rate applicable to the PRC exporter that supplied that non-PRC exporter. These requirements, when imposed, shall remain in effect until further notice.

Notification to Importers

This notice serves as a final reminder to importers of their responsibility under 19 CFR 351.402(f)(2) to file a certificate regarding the reimbursement of antidumping duties prior to liquidation of the relevant entries during this review period. Failure to comply with this requirement could result in the Secretary's presumption that reimbursement of antidumping duties occurred and the subsequent assessment of double antidumping duties.

Administrative Protective Orders

This notice also serves as a reminder to parties subject to administrative protective orders (APO) of their responsibility concerning the return or destruction of proprietary information disclosed under APO in accordance with 19 CFR 351.305, which continues to govern business proprietary information in this segment of the proceeding. Timely written notification of the return/destruction of APO materials or conversion to judicial protective order is hereby requested. Failure to comply with the regulations and terms of an APO is a violation which is subject to sanction.

This administrative review and notice are in accordance with sections 751(a)(1) and 777(i) of the Act and 19 CFR 351.213.

Dated: June 14, 2010.

Paul Piquado,

Acting Deputy Assistant Secretary for Import Administration.

Appendix 1

Issue 1: Whether the Petitioners' Request for Review of Jinan Yipin was Deficient.

Issue 2: Whether the Department Should Rescind its Administrative Review with Respect to Jinan Yipin and Shenzhen Greening.

Issue 3: Whether the Requirement That a Party Timely Certify No-Shipments is Unfair and Arbitrary.

Issue 4: Application of PRC-Wide Rate to Jinan Yipin and Shenzhen Greening.

Issue 5: Rescission of Shenzhen Xinboda.

Issue 6: Determination of Separate Rate.

Appendix 2

Companies Under Review Subject to the PRC-Wide Rate

1. Jining Trans-High Trading Co., Ltd.
2. Qingdao Saturn International Trade Co., Ltd.
3. Shenzhen Fanhui Import & Export Co., Ltd.
4. Heze Ever-Best International Trade Co., Ltd. (f/k/a Shandong Heze International Trade and Developing Company)
5. Jinan Yipin Corporation Ltd.
6. Jinxiang Dongyun Freezing Storage Co., Ltd. (a/k/a Jinxiang Eastward Shipping Import and Export Limited Company)
7. Jinxiang Shanyang Freezing Storage Co., Ltd.
8. Qufu Dongbao Import & Export Trade Co., Ltd.
9. Shenzhen Greening Trading Co., Ltd.
10. Shanghai Ever Rich Trade Company
11. Taiyan Ziyang Food Co., Ltd.

Appendix 3

Companies Subject to the Administrative Review

1. Anqiu Friend Food Co., Ltd.
2. Henan White Industrial Co., Ltd.
3. Heze Ever-Best International Trade Co., Ltd. (f/k/a Shandong Heze International Trade and Developing Company).
4. Jining Trans-High Trading Co., Ltd.
5. Jinan Yipin Corporation Ltd.
6. Jining Yongjia Trade Co., Ltd. (rescinded).
7. Jinxiang Dongyun Freezing Storage Co., Ltd. (a/k/a Jinxiang Eastward Shipping Import and Export Limited Company).
8. Jinxiang Shanyang Freezing Storage Co., Ltd.
9. Jinxiang Tianma Freezing Storage Co., Ltd.
10. Qingdao Xintianfeng Foods Co., Ltd.
11. Qingdao Saturn International Trade Co., Ltd.
12. Qufu Dongbao Import & Export Trade Co., Ltd.
13. Shanghai Ever Rich Trade Company.
14. Shanghai LJ International Trading Co., Ltd.
15. Shenzhen Fanhui Import & Export Co., Ltd.
16. Shenzhen Greening Trading Co., Ltd.
17. Taiyan Ziyang Food Co., Ltd.
18. Weifang Hongqiao International Logistic Co., Ltd.
19. Weifang Shennong Foodstuff Co., Ltd.

[FR Doc. 2010–14959 Filed 6–18–10; 8:45 am]

BILLING CODE 3510–DS–P

DEPARTMENT OF COMMERCE

International Trade Administration

[A–580–809]

Circular Welded Non–Alloy Steel Pipe from the Republic of Korea: Final Results of the Antidumping Duty Administrative Review

AGENCY: Import Administration, International Trade Administration, Department of Commerce.

SUMMARY: On December 8, 2009, the Department of Commerce (the "Department") published the preliminary results of the administrative review of the antidumping duty order on circular welded non–alloy steel pipe ("CWP") from the Republic of Korea ("Korea"), covering the period November 1, 2007, through October 31, 2008. *See Circular Welded Non–Alloy Steel Pipe from the Republic of Korea: Preliminary Results and Rescission in Part of the Antidumping Duty Administrative Review*, 74 FR 64670 (December 8, 2009) ("*Preliminary Results*"). This review covers six producers/exporters of the subject merchandise to the United States: SeAH Steel Corporation ("SeAH"), Dongbu Steel Co., Ltd., Korea Iron & Steel Co., Ltd., Union Steel Co., Ltd., Nexteel Co. Ltd., and A–JU Besteel Co., Ltd. SeAH is the only mandatory respondent. We gave the interested parties an opportunity to comment on the *Preliminary Results*. Based on our analysis of the comments received and the results of verification, we have made changes to the margin calculation. The

final weighted–average dumping margins for the reviewed firms are listed below in the section entitled "Final Results of Review."

EFFECTIVE DATE: June 21, 2010.

FOR FURTHER INFORMATION CONTACT: Alexander Montoro or Nancy Decker, AD/CVD Operations, Office 1, Import Administration, International Trade Administration, U.S. Department of Commerce, 14th Street and Constitution Avenue, N.W., Washington, DC 20230; telephone (202) 482–0238 or (202) 482–0196, respectively.

SUPPLEMENTARY INFORMATION:

Background

Following the *Preliminary Results*, the Department issued an additional supplemental questionnaire to SeAH on December 11, 2009, and SeAH responded on December 29, 2009.

From January 18 through January 22, 2010, we conducted the home market sales verification of the questionnaire responses of SeAH, and from February 8 through February 10, 2010, we conducted the U.S. sales verification of the questionnaire responses of SeAH at Pusan Pipe America ("PPA"). The Department released its verification reports for SeAH and PPA to interested parties on April 12, 2010.

As explained in the memorandum from the Deputy Assistant Secretary for Import Administration, the Department exercised its discretion to toll deadlines for the duration of the closure of the Federal Government from February 5, through February 12, 2010. Thus, all deadlines in this segment of the proceeding were extended by seven days. The revised deadline for the final results of this administrative review was thus extended to April 14, 2010. *See* Memorandum to the Record from Ronald Lorentzen, DAS for Import Administration, regarding "Tolling of Administrative Deadlines As a Result of the Government Closure During the Recent Snowstorms," dated February 12, 2010.

On March 23, 2010, the Department published in the **Federal Register** an extension of the time limit for the completion of the final results of this review until no later than June 14, 2010, in accordance with section 751(a)(3)(A) of the Tariff Act of 1930, as amended (" the Act"), and 19 CFR 351.213(h)(2). *See Circular Welded Non–Alloy Steel Pipe from the Republic of Korea: Extension of Time Limit for the Final Results and Rescission in Part of the Antidumping Duty Administrative Review*, 75 FR 13729 (March 23, 2010).

We invited parties to comment on the *Preliminary Results*. We received case briefs on April 26, 2010, from SeAH and the petitioners, United States Steel Corporation ("U.S. Steel"), Allied Tube and Conduit Corporation and TMK IPSCO Tubulars. On May 3, 2010, SeAH and U.S. Steel submitted rebuttal briefs. None of the parties requested a hearing.

Scope of the Order

The merchandise subject to this review is circular welded non–alloy steel pipe and tube, of circular cross-section, not more than 406.4mm (16 inches) in outside diameter, regardless of wall thickness, surface finish (black, galvanized, or painted), or end finish (plain end, beveled end, threaded, or threaded and coupled). These pipes and tubes are generally known as standard pipes and tubes and are intended for the low–pressure conveyance of water, steam, natural gas, air, and other liquids and gases in plumbing and heating systems, air–conditioning units, automatic sprinkler systems, and other related uses. Standard pipe may also be used for light load–bearing applications, such as for fence tubing, and as structural pipe tubing used for framing and as support members for reconstruction or load–bearing purposes in the construction, shipbuilding, trucking, farm equipment, and other related industries. Unfinished conduit pipe is also included in this review.

All carbon–steel pipes and tubes within the physical description outlined above are included within the scope of this review except line pipe, oil–country tubular goods, boiler tubing, mechanical tubing, pipe and tube hollows for redraws, finished scaffolding, and finished conduit. In accordance with the Department's *Final Negative Determination of Scope Inquiry on Certain Circular Welded Non–Alloy Steel Pipe and Tube From Brazil, the Republic of Korea, Mexico, and Venezuela*, 61 FR 11608 (March 21, 1996), pipe certified to the API 5L line–pipe specification and pipe certified to both the API 5L line–pipe specifications and the less–stringent ASTM A–53 standard–pipe specifications, which falls within the physical parameters as outlined above, and entered as line pipe of a kind used for oil and gas pipelines is outside of the scope of the antidumping duty order.

Imports of these products are currently classifiable under the following Harmonized Tariff Schedule ("HTS") subheadings: 7306.30.10.00, 7306.30.50.25, 7306.30.50.32, 7306.30.50.40, 7306.30.50.55, 7306.30.50.85, and 7306.30.50.90. Although the HTS subheadings are provided for convenience and customs purposes, our written description of the scope of this proceeding is dispositive.

Analysis of Comments Received

All issues raised in the case briefs are addressed in the "Issues and Decision Memorandum for the 2007–2008 Administrative Review of Circular Welded Non–Alloy Steel Pipe from the Republic of Korea" ("Issues and Decision Memorandum"), which is dated concurrently with and hereby adopted by this notice. A list of the issues which parties raised and to which we responded in the Issues and Decision Memorandum is attached to this notice as an Appendix. The Issues and Decision Memorandum is a public document which is on file in the Central Records Unit in room 1117 in the main Department building, and is accessible on the web at http://www.ia.ita.doc.gov/frn. The paper copy and electronic version of the memorandum are identical in content.

Changes Since the Preliminary Results

Based on our analysis of the comments received, we made the following changes in calculating dumping margins: (1) we revised the calculations from the *Preliminary Results* to account for minor corrections that SeAH submitted during the home market and constructed export price ("CEP") sales verifications; (2) we included SeAH's allowance for doubtful accounts in the indirect selling expense calculation; (3) we reclassified the reported grades of certain pipes for product comparison purposes; (4) we treated all of SeAH's letter of credit charges related to its U.S. sales as direct selling expenses; (5) we corrected the margin program by calculating SeAH's dumping margin by comparing monthly weighted–average normal values to individual U.S. prices; and (6) excluded inventory valuation losses from SeAH's cost calculations. For further details, see "Cost of Production and Constructed Value Calculation Adjustments for the Final Results - SeAH Steel Corporation," and "Final Results Calculation Memorandum for SeAH Steel Corporation," and *see also* Issues and Decision Memorandum, all dated June 14, 2010.

Cost of Production

Consistent with the *Preliminary Results*, we disregarded home market sales by SeAH that failed the cost–of-production test.

Final Results of the Review

We determine that a weighted–average dumping margin exists for the mandatory respondent, SeAH, for the

period November 1, 2007, through October 31, 2008. Respondents other than mandatory respondents normally receive the weighted–average of the margins calculated for those companies selected for individual review (*i.e.*, mandatory respondents), excluding *de minimis* margins or margins based entirely on adverse facts available. In this case, respondents other than SeAH are receiving SeAH's calculated margin as SeAH is the only remaining mandatory respondent.

Manufacturer/exporter	Weighted–average margin percent
SeAH Steel Corporation	3.28
Dongbu Steel Co., Ltd.	3.28
Korea Iron & Steel Co., Ltd.	3.28
Union Steel Co., Ltd.	3.28
Nexteel Co., Ltd.	3.28
A–JU Besteel Co., Ltd.	3.28

Public Comment

The Department will disclose calculations performed within five days of the date of publication of this notice to the parties to this proceeding in accordance with 19 CFR 351.224(b).

Assessment Rates

The Department shall determine, and U.S. Customs and Border Protection ("CBP") shall assess, antidumping duties on all appropriate entries, in accordance with 19 CFR 351.212(b)(1). The Department will issue appropriate appraisement instructions for the companies subject to this review directly to CBP 15 days after the date of publication of these final results of this review.

For SeAH, we will calculate importer–specific *ad valorem* duty assessment rates based on the ratio of the total amount of antidumping duties calculated for the examined sales to the total entered value of the sales, as reported by SeAH. See 19 CFR 351.212(b)(1). For the companies which were not selected for individual review, we will use SeAH's cash deposit rate as the assessment rate. Pursuant to 19 CFR 351.106(c)(2), we will instruct CBP to liquidate without regard to antidumping duties any entries for which the assessment rate is *de minimis (i.e.*, less than 0.50 percent).

The Department clarified its "automatic assessment" regulation on May 6, 2003. *See Antidumping and Countervailing Duty Proceedings: Assessment of Antidumping Duties*, 68 FR 23954 (May 6, 2003) ("Assessment Policy Notice"). This clarification will apply to entries of subject merchandise during the period of review ("POR") produced by companies included in these final results of review for which the reviewed companies did not know that the merchandise they sold to the intermediary (*e.g.*, a reseller, trading company, or exporter) was destined for the United States. In such instances, we will instruct CBP to liquidate unreviewed entries at the all–others rate if there is no rate for the intermediary involved in the transaction. *See Assessment Policy Notice* for a full discussion of this clarification.

Cash Deposit Requirements

The following deposit rates will be effective upon publication of the final results of this administrative review for all shipments of CWP from Korea entered, or withdrawn from warehouse, for consumption on or after the publication date, as provided by section 751(a)(2)(C) of the Act: (1) The cash deposit rates for the companies listed above will be the rates established in the final results of this review, except if the rate is less than 0.5 percent and, therefore, *de minimis*, the cash deposit will be zero; (2) for previously reviewed or investigated companies not listed above, the cash deposit rate will continue to be the company–specific rate published for the most recent final results in which that manufacturer or exporter participated; (3) if the exporter is not a firm covered in this review, a prior review, or the original less–than-fair–value ("LTFV") investigation, but the manufacturer is, the cash deposit rate will be the rate established for the most recent final results for the manufacturer of the merchandise; and (4) if neither the exporter nor the manufacturer is a firm covered in this or any previous review conducted by the Department, the cash deposit rate will be 4.80 percent, the "all others" rate established in the LTFV investigation. *See Notice of Antidumping Duty Orders: Certain Circular Welded Non–Alloy Steel Pipe from Brazil, the Republic of Korea, Mexico, and Venezuela, and Amendment to Final Determination of Sales at Less Than Fair Value: Certain Circular Welded Non–Alloy Steel Pipe from Korea*, 57 FR 49453 (November 2, 1992). These cash deposit requirements, when imposed, shall remain in effect until further notice.

Notification to Importers

This notice serves as a final reminder to importers of their responsibility under 19 CFR 351.402(f)(2) to file a certificate regarding the reimbursement of antidumping duties prior to liquidation of the relevant entries during this review period. Failure to comply with this requirement could result in the Secretary's presumption that reimbursement of antidumping duties occurred and the subsequent assessment of double antidumping duties.

Notification to Interested Parties

This notice serves as the only reminder to parties subject to administrative protective order ("APO") of their responsibility concerning the disposition of proprietary information disclosed under APO in accordance with 19 CFR 351.305(a)(3). Timely written notification of return/destruction of APO materials or conversion to judicial protective order is hereby requested. Failure to comply with the regulations and the terms of an APO is a sanctionable violation.

These final results of review are issued and published in accordance with sections 751(a)(1) and 777(i)(1) of the Act.

Dated: June 14, 2010.

Paul Piquado,

Acting Deputy Assistant Secretary for Import Administration.

Appendix Issues in Decision Memorandum

Comment 1: Application of Quarterly Costs

Comment 2: Inventory Valuation Loss
Comment 3: Application of the Major Input Rule
Comment 4: Allowance for Doubtful Accounts/Bad Debts
Comment 5: Ordinary Pipe versus Pressure Pipe Classification
Comment 6: Bank Charges Incurred: Letter of Credit Charges
Comment 7: Recalculating SeAH's Dumping Margin by Comparing Monthly Weighted–Average Normal Values to Individual U.S. Prices
Comment 8: Zeroing–Out Negative Dumping Margins

[FR Doc. 2010–14945 Filed 6–18–10; 8:45 am]

BILLING CODE 3510–DS–S

DEPARTMENT OF COMMERCE

International Trade Administration

[C–570–968]

Aluminum Extrusions from the People's Republic of China: Notice of Postponement of Preliminary Determination in the Countervailing Duty Investigation

AGENCY: Import Administration, International Trade Administration, Department of Commerce.

EFFECTIVE DATE: June 21, 2010.

FOR FURTHER INFORMATION CONTACT: John Conniff, AD/CVD Operations, Office 3, Import Administration, International Trade Administration, U.S. Department of Commerce, 14th Street and Constitution Avenue, NW, Washington, DC 20230; telephone 202–482–1009.

SUPPLEMENTARY INFORMATION:

Background

On April 27, 2010, the Department of Commerce (the Department) published in the **Federal Register** a notice of initiation of the countervailing duty investigation of aluminum extrusions from the People's Republic of China. *See Aluminum Extrusions From the People's Republic of China: Initiation of Countervailing Duty Investigation*, 75 FR 22114 (April 27, 2010). On May 11, 2010, petitioners requested, in accordance with section 703(c)(1)(A) of the Tariff Act of 1930, as amended (the Act), and 19 CFR 351 205(b)(2), a 65-day postponement of the preliminary determination.[1]

Postponement of Due Date for Preliminary Determination

Section 703(b)(1) of the Act requires the Department to issue the preliminary determination in a countervailing duty investigation within 65 days after the date on which the Department initiated the investigation. However, the Department may postpone, at petitioners' timely request, making the preliminary determination until no later than 130 days after the date on which the administering authority initiated the investigation. *See* section 703(c)(1)(A) of the Act.

Petitioners' request for a 65-day postponement of the preliminary determination was made 25 days before the scheduled date of the preliminary determination, pursuant to 19 CFR 351.205(e). Therefore, in accordance with section 703(c)(1)(A) of the Act and 19 CFR 351.205(b)(2), we are fully extending the due date for the preliminary determination to no later than 130 days after the day on which the investigation was initiated. The deadline for completion of the preliminary determination is now August 28, 2010. Because that date falls on a weekend, the deadline for completion of this preliminary determination is the next business day, *i.e.*, August 30, 2010.

[1] Petitioners are Aerolite Extrusion Company, Alexandria Extrusion Company, Benada Aluminum of Florida, Inc., William L. Bonnell Company, Inc., Frontier Aluminum Corporation, Futura Industries Corporation, Hydro Aluminum North America, Inc., Kaiser Aluminum Corporation, Profile Extrusion Company, Sapa Extrusions, Inc., and Western Extrusions Corporation.

This notice is issued and published pursuant to section 703(c)(2) of the Act.

Dated: June 15, 2010.

Paul Piquado,

Acting Deputy Assistant Secretary for Import Administration.

[FR Doc. 2010–15099 Filed 6–17–10; 4:15 pm]

BILLING CODE 3510–DS–S

COMMODITY FUTURES TRADING COMMISSION

Order (1) Pursuant to Section 4(c) of the Commodity Exchange Act, Permitting the Kansas City Board of Trade Clearing Corporation To Clear Over-the-Counter Wheat Calendar Swaps and (2) Pursuant to Section 4d of the Commodity Exchange Act, Permitting Customer Positions in Such Cleared-Only Swaps and Associated Funds To Be Commingled With Other Positions and Funds Held in Customer Segregated Accounts

AGENCY: Commodity Futures Trading Commission.

ACTION: Order.

SUMMARY: By petition dated May 26, 2009 (Petition), the Kansas City Board of Trade (KCBT), a designated contract market, and its wholly-owned subsidiary corporation, the Kansas City Board of Trade Clearing Corporation (KCBTCC), a registered derivatives clearing organization (DCO), requested permission to clear over-the-counter (OTC) swap agreements (swaps) in wheat. Authority for granting this request is found in section 4(c) of the Commodity Exchange Act (Act).[1] The Petition also requested permission pursuant to section 4d of the Act[2] to allow KCBTCC and futures commission merchants (FCMs) to commingle positions in those cleared-only OTC swaps and funds associated with those positions with positions and funds otherwise required to be held in a customer segregated account. The Commodity Futures Trading Commission (Commission) has reviewed public comments and the entire record in this matter and it has determined to issue an order granting the requested permission, subject to certain terms and conditions.

DATES: *Effective Date:* June 15, 2010.

FOR FURTHER INFORMATION CONTACT: Phyllis P. Dietz, Associate Director, 202–418–5449, *pdietz@cftc.gov,* or Eileen A. Donovan, Special Counsel, 202–418–5096, *edonovan@cftc.gov,* Division of Clearing and Intermediary Oversight, Commodity Futures Trading Commission, Three Lafayette Centre, 1155 21st Street, NW., Washington, DC 20581.

[1] 7 U.S.C. 6(c).

[2] 7 U.S.C. 6d.

SUPPLEMENTARY INFORMATION:

I. The KCBT/KCBTCC Petition

KCBT and KCBTCC ("Petitioners") jointly submitted a Petition requesting that the Commission issue an exemptive order under section 4(c) of the Act.[3] The order would grant KCBTCC approval to clear OTC wheat calendar swaps, and it would permit KCBT to list those products for "clearing-only" ("cleared-only wheat swaps"). The contract size for the cleared-only wheat swaps would be the same as that for wheat futures—5,000 bushels. The proposed cleared-only wheat swaps would be cash settled, in contrast to the futures contracts which are physically settled.

Part 35 of the Commission's regulations[4] exempts, subject to conditions, swap agreements and eligible persons entering into such agreements from most provisions of the Act.[5] Part 35 was promulgated pursuant to authority conferred upon the Commission in section 4(c) of the Act to exempt certain transactions in order to explicitly permit certain off-exchange derivatives transactions and thus promote innovation and competition.[6] A number of exemptions and exclusions for off-exchange derivatives transactions were subsequently added to the Act by the Commodity Futures Modernization Act of 2000,[7] but none apply to agricultural contracts.[8] Accordingly, swaps involving agricultural commodities continue to rely upon the exemption in part 35.

Part 35 requires, among other things, that a swap agreement not be part of a fungible class of agreements that are standardized as to their material economic terms,[9] and that the creditworthiness of any party having an interest under the agreement be a material consideration in entering into or negotiating the terms of the

[3] A copy of the petition is available on the Commission's Web site at *http://www.cftc.gov/.*

[4] 17 CFR part 35 (Commission regulations are hereinafter cited as "Reg. § __").

[5] Jurisdiction is retained for, among other things, provisions of the Act proscribing fraud and manipulation. *See* Reg. § 35.2.

[6] *See* 58 FR 5587 (Jan. 22, 1993). Section 4(c) of the Act was added by section 502(a) of the Futures Trading Practices Act of 1992, Public Law 102–546, 106 Stat. 3590 (1992).

[7] Pub. L. 106–554, 114 Stat. 2763 (2000).

[8] *See, e.g.,* sections 2(d), (g) and (h) of the Act, 7 U.S.C. 2(d), (g), and (h).

[9] Reg. § 35.2(b).

agreement.[10] Under the arrangement proposed by Petitioners, a cleared-only wheat swap could be offset by another cleared-only wheat swap with equivalent terms. In addition, due to the introduction of a clearing guarantee, the creditworthiness of the counterparty would no longer be a consideration. Accordingly, the OTC swaps KCBTCC would clear would not satisfy all of the conditions of part 35.[11]

Part 35 permits "any person [to] apply to the Commission for exemption from any of the provisions of the Act * * * for other arrangements or facilities."[12] Petitioners have requested that the Commission issue an order under section 4(c) of the Act that would exempt cleared-only wheat swaps to the same extent as contracts that are exempt pursuant to part 35 of the Commission's regulations.

In addition, Petitioners also requested an order under section 4d of the Act so that KCBTCC and FCMs could hold customer positions in the cleared-only wheat swaps and associated funds in the customer segregated account along with positions in exchange-traded futures and customer funds, resulting in improved collateral management and other benefits.

II. Sections 4(c) and 4d of the Act

A. Permitting the OTC Swaps To Be Cleared

In enacting section 4(c) of the Act, Congress noted that the goal of the provision "is to give the Commission a means of providing certainty and stability to existing and emerging markets so that financial innovation and market development can proceed in an effective and competitive manner."[13] Section 4(c)(1) of the Act empowers the Commission to "promote responsible economic or financial innovation and fair competition" by exempting any transaction or class of transactions from any of the provisions of the Act (subject to exceptions not relevant here) where the Commission determines that the exemption would be consistent with the public interest.[14] The Commission may grant such an exemption by rule, regulation, or order, after notice and opportunity for hearing, and may do so on application of any person or on its own initiative.

Section 4(c)(2) of the Act provides that the Commission may grant exemptions from section 4(a) of the Act only when the Commission determines that the requirements for which an exemption is being provided should not be applied to the agreements, contracts, or transactions at issue, and the exemption is consistent with the public interest and the purposes of the Act; that the agreements, contracts, or transactions will be entered into solely between appropriate persons; and that the exemption will not have a material adverse effect on the ability of the Commission or any contract market or derivatives transaction execution facility to discharge its regulatory or self-regulatory responsibilities under the Act.[15]

The Commission requested comment on whether it should grant an exemption from the requirements of the Act, thereby permitting cleared-only wheat swaps to be cleared through KCBTCC. It also requested comment on whether such an exemption would affect its ability to discharge its regulatory responsibilities under the Act or the self-regulatory duties of any contract market.

B. Permitting Funds To Be Commingled

Section 4d(a)(2) of the Act prohibits commingling positions executed on a contract market and customer funds associated with such positions together with any funds not required to be so segregated.[16] Section 4d(a)(2) provides that the Commission may grant exceptions to this prohibition by order.

In this case, the cleared-only wheat swaps are not executed on a contract market and, thus, holding positions in those contracts and associated funds in an account together with positions and customer funds required to be segregated would, absent a Commission order, violate Section 4d. Having analyzed the risks and benefits associated with commingling such positions and funds in a customer segregated account, the Commission has determined that the benefits of the proposal outweigh the risks and that the proposal, along with conditions set forth by the Commission in its order, will provide sufficient safeguards to address the risks adequately.

III. Comment Letters

The Commission published a request for comments regarding the 4(c) exemption in the **Federal Register** on November 13, 2009.[17] At the same time, it posted the Petition on the Commission's Web site, providing the opportunity for the public to comment on any aspect of the Petition, including the request for an order under section 4d of the Act.

The Commission received three comment letters.[18] All three letters expressly supported the issuance of an exemptive order to permit clearing of the OTC wheat calendar swaps, citing such benefits as increased transparency and liquidity in the OTC markets and enhanced risk management for market participants. Of those letters, two specifically commented on the 4d order request. Both of those letters supported the issuance of an order to permit the commingling of positions in cleared-only wheat swaps and associated funds

---

[10] Reg. § 35.2(c).

[11] The contracts that KCBT proposes to list for clearing only would, however, meet the requirements of Reg. §§ 35.2(a) and (d) in that they would be entered into solely between eligible swap participants and executed OTC, respectively.

[12] Reg. § 35.2(d).

[13] House Conf. Report No. 102–978, 1992 U.S.C.C.A.N. 3179, 3213.

[14] Section 4(c)(1) of the Act, 7 U.S.C. 6(c)(1), provides in full as follows:

In order to promote responsible economic or financial innovation and fair competition, the Commission by rule, regulation, or order, after notice and opportunity for hearing, may (on its own initiative or on application of any person, including any board of trade designated or registered as a contract market or derivatives transaction execution facility for transactions for future delivery in any commodity under section 7 of this title) exempt any agreement, contract, or transaction (or class thereof) that is otherwise subject to subsection (a) of this section (including any person or class of persons offering, entering into, rendering advice or rendering other services with respect to, the agreement, contract, or transaction), either unconditionally or on stated terms or conditions or for stated periods and either retroactively or prospectively, or both, from any of the requirements of subsection (a) of this section, or from any other provision of this chapter (except subparagraphs (c)(ii) and (D) of section 2(a)(1) of this title, except that the Commission and the Securities and Exchange Commission may by rule, regulation, or order jointly exclude any agreement, contract, or transaction from section 2(a)(1)(D) of this title), if the Commission determines that the exemption would be consistent with the public interest.

[15] Section 4(c)(2) of the Act, 7 U.S.C. 6(c)(2), provides in full as follows:

The Commission shall not grant any exemption under paragraph (1) from any of the requirements of subsection (a) of this section unless the Commission determines that—

(A) the requirement should not be applied to the agreement, contract, or transaction for which the exemption is sought and that the exemption would be consistent with the public interest and the purposes of this Act; and

(B) the agreement, contract, or transaction—

(i) will be entered into solely between appropriate persons; and

(ii) will not have a material adverse effect on the ability of the Commission or any contract market or derivatives transaction execution facility to discharge its regulatory or self-regulatory duties under this Act.

[16] Under Reg. § 1.3(gg), the term "customer funds" is defined to include all money, securities, and property received by an FCM or by a DCO from, for, or on behalf of, customers or option customers to margin, guarantee or secure exchange-traded futures contracts or options on futures, and all money accruing to such customers as the result of such contracts. The term "funds" is similarly used herein to refer to cash as well as securities and other property associated with futures contracts or cleared-only contracts.

[17] *See* 74 FR 58608 (Nov. 13, 2009).

[18] Letters were submitted by Louis Dreyfus Commodities, International Assets Holding Company, and the Futures Industry Association.

with positions and customer funds otherwise required to be held in a customer segregated account.

IV. Findings and Conclusions

After considering the complete record in this matter, including the comments received, the Commission finds that the requirements of section 4(c) of the Act have been met with respect to the request for an order permitting the clearing of OTC wheat calendar swaps.

First, permitting the clearing of these transactions, subject to the terms and conditions of the order, is consistent with the public interest and with the purposes of the Act. The purposes of the Act include "promot[ing] responsible innovation and fair competition among boards of trade, other markets, and market participants." [19] The purpose of an exemption is "to promote economic or financial innovation and fair competition." [20] Permitting the clearing of OTC wheat calendar swaps by KCBTCC would appear to foster both financial innovation and competition. It could benefit the marketplace by providing eligible swap participants the ability to bring together flexible negotiation with central counterparty guarantees and capital efficiencies. Clearing also may increase the liquidity of the OTC markets and thereby foster competition in those markets. Moreover, in furtherance of the public interest, the order requires that the cleared-only wheat swaps be executed pursuant to the requirements of part 35 of the Commission's regulations. Part 35, among other things, provides for the Commission's continuing authority to enforce provisions of the Act and Regulations that prohibit fraud and manipulation.

Second, the cleared-only wheat swaps would be entered into solely between appropriate persons. Those would be limited to persons qualifying as eligible swap participants under part 35 of the Commission's regulations.[21]

Third, the exemption would not have a material adverse effect on the ability of the Commission or any designated contract market to carry out its regulatory or self-regulatory responsibilities under the Act. Clearing of OTC wheat swaps will actually enhance the Commission's ability to carry out its regulatory responsibilities by, for example, facilitating the collection of large trader reports for cleared-only wheat swaps. KCBTCC will use the same systems, procedures, personnel, and processes to clear the cleared-only wheat swaps as it currently employs with respect to all of the other transactions it clears for KCBT.

The Commission has concluded that permitting the clearing of OTC wheat swaps, subject to the terms and conditions of the order, furthers the goals of market transparency and liquidity, and financial risk management. It also enhances the Commission's ability to obtain market information and conduct oversight once OTC transactions are cleared by a registered DCO.

With respect to the Petitioners' request for an order pursuant to section 4d permitting KCBTCC and FCMs, including non-clearing and non-member FCMs, to commingle cleared-only contract positions and associated funds with positions and customer funds required to be held in a customer segregated account, the Commission recognizes that there is additional risk to customer funds as a result of the possibility of default involving commingled cleared-only positions. The Commission has considered whether such additional risk to customers can be adequately addressed and mitigated by KCBTCC and participating FCMs.

Each carrying FCM should have adequate means to address a default by a customer holding cleared-only contracts. In the event of a customer default on a position in the cleared-only wheat swaps, the FCM could offset its risk by liquidating the customer position through a broker or dealer in the OTC swap market or by taking an economically equivalent position in the KCBT wheat futures contract.

The order requires that KCBTCC review the FCMs' risk management capabilities to verify that all FCMs carrying the cleared-only wheat swaps maintain sufficient operational capability to manage a default in a cleared-only contract. In the event of an FCM default, KCBTCC would have available the same means for managing the default as the FCM would have in the first instance.

The order further requires that all FCMs subject to the order, regardless of whether an FCM is a member of KCBT or KCBTCC, to execute a participation agreement that provides, among other things, that the FCM agrees to be bound by all KCBT rules pertaining to the cleared-only wheat swaps and to cooperate with, promptly respond to any inquiries or requests for information from, and make available its books and records for inspection to KCBT.

The order also requires that KCBT: (1) Maintain a coordinated market surveillance program that encompasses the cleared-only wheat swaps and the corresponding wheat futures contracts, and (2) adopt speculative position limits for the cleared-only wheat swaps that are the same as the limits applicable to the corresponding wheat futures contracts. These measures should mitigate market risk.

Accordingly, the Commission has determined that KCBTCC will be able to employ reasonable safeguards to protect customer funds, and that it will be able to measure, monitor, manage, and account for risks associated with transactions and open interest in the cleared-only wheat swaps in the same manner as it does for other contracts it clears. The Commission believes that KCBTCC has sufficiently demonstrated that it will continue to comply with the DCO core principles set forth in section 5b of the Act in connection with holding customer positions in cleared-only wheat swaps and associated funds with positions and customer funds required to be held in a customer segregated account pursuant to section 4d of the Act.

V. Related Matters

A. Paperwork Reduction Act

The Paperwork Reduction Act of 1995 (PRA) [22] imposes certain requirements on Federal agencies (including the Commission) in connection with their conducting or sponsoring any collection of information as defined by the PRA. The Commission's order will not require a new collection of information from any entities that would be subject to the order.

B. Cost-Benefit Analysis

Section 15(a) of the Act [23] requires the Commission to consider the costs and benefits of its action before issuing an order under the Act. By its terms, section 15(a) does not require the Commission to quantify the costs and benefits of an order or to determine whether the benefits of the order outweigh its costs. Rather, section 15(a) simply requires the Commission to "consider the costs and benefits" of its action.

Section 15(a) of the Act further specifies that costs and benefits shall be evaluated in light of five broad areas of market and public concern: Protection of market participants and the public; efficiency, competitiveness, and financial integrity of futures markets; price discovery; sound risk management practices; and other public interest considerations. Accordingly, the Commission could in its discretion give

[19] Section 3(b) of the Act, 7 U.S.C. 5(b).

[20] Section 4(c)(1) of the Act, 7 U.S.C. 6(c)(1).

[21] *See* Reg. § 35.1(b)(2) (defining the term "eligible swap participant").

[22] 44 U.S.C. 3507(d).

[23] 7 U.S.C. 19(a).

greater weight to any one of the five enumerated areas and could in its discretion determine that, notwithstanding its costs, a particular order was necessary or appropriate to protect the public interest or to effectuate any of the provisions or to accomplish any of the purposes of the Act.

The Commission has considered the costs and benefits of this order in light of the specific provisions of section 15(a) of the Act, as follows:

1. *Protection of market participants and the public.* The cleared-only wheat swaps will be entered into only by persons who are "appropriate persons" as set forth in section 4(c) of the Act. Only eligible swap participants will enter into the wheat calendar swaps that will be cleared pursuant to the Commission's order. Allowing the commingling of positions in cleared-only contracts and associated funds with positions and customer funds required to be segregated under section 4d of the Act will benefit market participants by facilitating clearing and the reduction of credit risk for contracts that meet market participants' specific risk management requirements. Customers holding positions in cleared-only wheat swaps also will benefit from having those positions and associated funds held in a customer segregated account in the event of the insolvency of an FCM. Futures customers will be protected from risks associated with the commingling of funds by a number of existing risk management and other safeguards, including KCBTCC's financial surveillance and oversight of clearing members and non-clearing member and non-member FCMs pursuant to the participation agreement, and its financial resources package, as supplemented by conditions imposed by the order. Bringing OTC contracts into a regulated clearing venue also protects market participants by eliminating bilateral counterparty risk through the clearing process.

2. *Efficiency and competition.* Allowing the OTC wheat calendar swaps to be cleared appears likely to promote liquidity and transparency in the markets for OTC derivatives as well as futures on those commodities. The commingling of positions in cleared-only contracts and associated funds with positions and customer funds required to be held in a customer segregated account should result in improved, more efficient, collateral management and lower administrative costs given that risk-reducing positions will be held together in the same account rendering a more precise estimation of the risk posed by the account. The availability of cleared-only wheat swaps also provides another risk management tool that can compete with other OTC products.

3. *Financial integrity of futures markets and price discovery.* Price discovery is likely to be enhanced by bringing greater transparency to the OTC market for wheat. The section 4(c) exemption also may promote financial integrity by providing the benefits of clearing to the OTC wheat market. As discussed above, the Commission believes that the risks associated with the commingling of funds in the customer segregated account can be appropriately mitigated.

4. *Sound risk management practices.* Clearing of the cleared-only wheat swaps is likely to improve risk management by the participant counterparties. KCBTCC's risk management practices in clearing these transactions are subject to the Commission's supervision and oversight, and the requirements of the participation agreement expressly supplement the FCMs' responsibilities to adequately manage risk.

5. *Other public interest considerations.* The action taken by the Commission under sections 4(c) and 4d of the Act is likely to encourage market competition in agricultural derivatives products. It will also further the Commission's overall goals in supporting greater market transparency, credit risk management, and regulatory oversight by encouraging the clearing of OTC products.

The Commission requested comment on its application of these factors in the proposing release. No comments were received.

VI. Order

After considering the above factors and the comment letters received in response to its request for comments, the Commission has determined to issue the following:

Order

(1) The Commission, pursuant to its authority under section 4(c) of the Commodity Exchange Act ("Act") and subject to the conditions below, hereby permits eligible swap participants to submit for clearing, and FCMs and KCBTCC to clear, OTC wheat calendar swaps (eligible products).

(2) The Commission, pursuant to its authority under section 4d of the Act and subject to the conditions below, hereby permits:

(a) KCBTCC;

(b) registered FCMs that are clearing members of KCBT;

(c) registered FCMs that are non-clearing members of KCBT; and

(d) registered FCMs that are non-members of KCBT,

acting on behalf of customers pursuant to this order, to hold money, securities, and other property, used to margin, guarantee, or secure cleared-only transactions in eligible products (cleared-only contracts), and belonging to customers that are eligible swap participants, with other customer funds used to margin, guarantee, or secure trades or positions in commodity futures or commodity option contracts executed on or subject to the rules of a contract market designated pursuant to section 5 of the Act, in a customer segregated account or accounts maintained in accordance with section 4d of the Act (including any orders issued pursuant to section 4d(a)(2) of the Act) and the Commission's regulations thereunder, and all such customer funds shall be accounted for and treated and dealt with as belonging to the customers of the registered FCM, consistent with section 4d of the Act and the regulations thereunder.

(3) This order is subject to the following conditions:

(a) The contracts, agreements, or transactions subject to this order shall be executed pursuant to the requirements of part 35 of the Commission's regulations, as modified herein, and shall be limited to the eligible products identified in this order.

(b) All eligible products that are submitted for clearing shall be submitted pursuant to KCBT and KCBTCC rules.

(c) Each registered FCM subject to this order shall take appropriate measures to:

(i) Ensure that any customer submitting eligible products for clearing qualifies as an eligible swap participant; and

(ii) identify, measure, and monitor financial risk associated with carrying the cleared-only contracts in the customer segregated account and implement risk management procedures to address those financial risks.

(d) KCBT shall require each registered FCM subject to this order, regardless of whether such FCM is a member of KCBT or KCBTCC, to execute an agreement that provides, among other things, that the FCM agrees to be bound by all KCBT rules pertaining to the cleared-only contracts and to cooperate with, promptly respond to any inquiries or requests for information from, and make available its books and records for inspection to KCBT.

(e) KCBTCC shall apply appropriate risk management procedures with respect to transactions and open interest in the cleared-only contracts. KCBTCC shall conduct financial surveillance and oversight of each registered FCM subject to this order, regardless of whether such FCM is a member of KCBT or KCBTCC, and it shall conduct oversight sufficient to assure KCBTCC that each such FCM has the appropriate operational capabilities necessary to manage defaults in such contracts. KCBTCC and each FCM subject to this order shall take all other steps necessary and appropriate to manage risk related to clearing eligible products.

(f) Each cleared-only contract shall be marked to market on a daily basis, and final settlement prices shall be established in accordance with KCBT rules.

(g) KCBTCC shall apply its margining system and calculate performance bond rates for each cleared-only contract in accordance with its normal and customary practices;

(h) KCBT shall make available open interest and settlement price information for the cleared-only contracts on a daily basis in the same manner as for contracts listed on KCBT.

(i) KCBT shall establish and maintain a coordinated market surveillance program that encompasses the cleared-only contracts and the corresponding futures contracts listed by KCBT on its designated contract market.

(j) KCBT shall adopt speculative position limits for the cleared-only contracts that are the same as the limits applicable to the corresponding futures contracts pursuant to Commission regulation § 150.2.

(k) The cleared-only contracts shall not be treated as fungible with any contract listed for trading on KCBT.

(l) Each FCM acting pursuant to this order shall keep the types of information and records that are described in section 4g of the Act and Commission regulations thereunder, including but not limited to Commission regulation § 1.35, with respect to all cleared-only contracts. Such information and records shall be produced for inspection in accordance with the requirements of Commission regulation § 1.31.

(m) KCBT shall provide to the Commission the types of information described in part 16 of the Commission's regulations in the manner described in parts 15 and 16 of the Commission's regulations with respect to all cleared-only contracts.

(n) KCBT shall apply large trader reporting requirements to cleared-only contracts in accordance with its rules, and each FCM acting pursuant to this order shall provide to the Commission the types of information described in part 17 of the Commission's regulations in the manner described in parts 15 and 17 of the Commission's regulations with respect to all cleared-only contracts in which it participates.

(o) KCBT and KCBTCC shall at all times fulfill all representations made in their requests for Commission action under sections 4(c) and 4d of the Act and all supporting materials thereto.

Based upon the representations made and supporting material provided to the Commission by KCBT and KCBTCC in connection with the Petition, the Commission finds that KCBT and KCBTCC, subject to the terms and conditions specified herein, have demonstrated their ability to comply with the requirements of the Act and Commission regulations, as applicable to the clearing of the OTC contracts subject to this order and the carrying of related customer funds in a customer segregated account.

Any material change or omission in the facts and circumstances pursuant to which this order is granted might require the Commission to reconsider its finding that the actions taken herein are appropriate. Further, in its discretion, the Commission may condition, suspend, terminate, or otherwise modify this order, as appropriate, on its own motion.

Issued in Washington, DC, on June 15, 2010, by the Commission.

Sauntia S. Warfield,

Assistant Secretary of the Commission.

[FR Doc. 2010–14974 Filed 6–18–10; 8:45 am]

BILLING CODE P

DEPARTMENT OF DEFENSE

Office of the Secretary

Federal Advisory Committee; Defense Business Board (DBB)

AGENCY: Department of Defense (DoD).

ACTION: Meeting notice.

SUMMARY: Under the provisions of the Federal Advisory Committee Act of 1972 (5 U.S.C., Appendix, as amended), the Government in the Sunshine Act of 1976 (5 U.S.C. 552b, as amended), and 41 CFR 102–3.150, the Department of Defense announces that the Defense Business Board (hereafter, "DBB" or "Board") will meet on July 22, 2010, at the Pentagon Conference Center. Subject to the availability of space, the meeting is open to the public.

DATES: The meeting will be held on Thursday, July 22, 2010, from 9 a.m. to 9:45 a.m.

ADDRESSES: The meeting will be held at the Pentagon Conference Center, Room B–6, Washington, DC (escort required, *see* below).

FOR FURTHER INFORMATION CONTACT: For meeting information please contact Ms. Debora Duffy, Defense Business Board, 1155 Defense Pentagon, Room 5B–1088A, Washington, DC 20301–1155, *Debora.Duffy@osd.mil,* (703) 697–2168. The Board's Designated Federal Officer (DFO) is Ms. Phyllis Ferguson, Defense Business Board, 1155 Defense Pentagon, Room 5B–1088A, Washington, DC 20301–1155, *Phyllis.Ferguson@osd.mil,* (703) 695–7563.

SUPPLEMENTARY INFORMATION:

Background

At this meeting, the Board will deliberate partial findings and draft recommendations from the "Reducing Overhead Improving Business Operations" Task Group. The mission of the Board is to advise the Secretary of Defense on effective strategies for implementation of best business practices of interest to the Department of Defense.

Availability of Materials for the Meeting

A copy of the draft agenda for the July 22, 2010, meeting and the terms of reference for the Task Group may be obtained from the Board's Web site at *http://dbb.defense.gov/meetings.html* under "Upcoming Meetings: 22 July 2010."

Public's Accessibility to the Meeting

Pursuant to 5 U.S.C. 552b and 41 CFR 102–3.140 through 102–3.165, and the availability of space, this meeting is open to the public. Seating is on a first-come basis. All members of the public who wish to attend the meeting must contact Ms. Duffy (*see* **FOR FURTHER INFORMATION CONTACT**) no later than noon on Wednesday, July 14th to register and make arrangements for a Pentagon escort, if necessary. Public attendees requiring escort should arrive at the Pentagon Metro Entrance in time to complete security screening by no later than 8:30 a.m. To complete security screening, please come prepared to present two forms of identification: (1) A government-issued photo I.D., and (2) any type of secondary I.D. which verifies the individual's name (*i.e.* debit card, credit card, work badge, social security card).

Special Accommodations: Individuals requiring special accommodations to

access the public meeting should contact Ms. Duffy at least five (5) business days prior to the meeting so that appropriate arrangements can be made.

Procedures for Providing Public Comments

Pursuant to 41 CFR 102–3.105(j) and 102–3.140, and section 10(a)(3) of the Federal Advisory Committee Act of 1972, the public or interested organizations may submit written comments to the Board about its mission and topics pertaining to this public session.

Written comments should be received by the DFO at least five (5) business days prior to the meeting date so that the comments may be made available to the Board for their consideration prior to the meeting. Written comments should be submitted via email to the address for the DFO (*see* **FOR FURTHER INFORMATION CONTACT**) in the following formats (Adobe Acrobat, WordPerfect, or Word format). Please note: Since the Board operates under the provisions of the Federal Advisory Committee Act, as amended, all public presentations will be treated as public documents and will be made available for public inspection, up to and including being posted on the Board's Web site.

Dated: June 16, 2010.

Mitchell S. Bryman,

Alternate OSD Federal Register Liaison Officer, Department of Defense.

[FR Doc. 2010–14871 Filed 6–18–10; 8:45 am]

BILLING CODE 5001–06–P

DEPARTMENT OF DEFENSE

Office of the Secretary

Federal Advisory Committee; Defense Science Board 2010 Summer Study on Enhancing Adaptability of Our Military Forces

AGENCY: Department of Defense (DoD).

ACTION: Notice of advisory committee meeting.

SUMMARY: The Defense Science Board 2010 Summer Study on Enhancing Adaptability of our Military Forces will meet in closed session from August 2–13, 2010, in Lexington and Dedham, MA.

DATES: The meeting will be held August 2–13, 2010.

ADDRESSES: The meeting will be held at the MIT Lincoln Laboratory, Lexington, MA and at the Endicott House, Dedham, MA.

FOR FURTHER INFORMATION CONTACT: Maj Michael Warner, USAF, Defense Science Board, 3140 Defense Pentagon, Room 3B888A, Washington, DC 20301–3140, via e-mail at *michael.warner@osd.mil,* or via phone at (703) 571–0081.

SUPPLEMENTARY INFORMATION: The mission of the Defense Science Board is to advise the Secretary of Defense and the Under Secretary of Defense for Acquisition, Technology & Logistics on scientific and technical matters as they affect the perceived needs of the Department of Defense. At this meeting, the Board will discuss interim finding and recommendations resulting from ongoing Task Force activities. Members will establish defining metrics and identifying fundamental attributes of an architecture to enhance adaptability. They will also identify successful examples of adaptation, both commercial and non-commercial, and what made them successful and also unsuccessful examples and the factors which contributed to unsuccessful adaptation.

In accordance with section 10(d) of the Federal Advisory Committee Act, Public Law 92–463, as amended (5 U.S.C. App. 2) and 41 CFR 102–3.155, the Department of Defense has determined that these Defense Science Board Quarterly meetings will be closed to the public. Specifically, the Under Secretary of Defense (Acquisition, Technology and Logistics), with the coordination of the DoD Office of General Counsel, has determined in writing that all sessions of these meetings will be closed to the public because they will be concerned throughout with matters listed in 5 U.S.C. 552b(c)(1) and (4).

Interested persons may submit a written statement for consideration by the Defense Science Board. Individuals submitting a written statement must submit their statement to the Designated Federal Official (*see* **FOR FURTHER INFORMATION CONTACT**), at any point, however, if a written statement is not received at least 10 calendar days prior to the meeting, which is the subject of this notice, then it may not be provided to or considered by the Defense Science Board. The Designated Federal Official will review all timely submissions with the Defense Science Board Chairperson, and ensure they are provided to members of the Defense Science Board before the meeting that is the subject of this notice.

Dated: June 16, 2010.

Mitchell S. Bryman,

Alternate OSD Federal Register Liaison Officer, Department of Defense.

[FR Doc. 2010–14889 Filed 6–18–10; 8:45 am]

BILLING CODE 5001–06–P

DEPARTMENT OF DEFENSE

Department of the Navy

Notice of Intent To Grant Exclusive Patent License; Fiber Optic Sensor Systems Technology Corporation

AGENCY: Department of the Navy, DoD.

ACTION: Notice.

SUMMARY: The Department of the Navy hereby gives notice of its intent to grant to Fiber Optic Sensor Systems Technology Corporation a revocable, nonassignable, exclusive license to practice the field of use of electrical power measurements for the measurement or control of temperature, pressure, strain, vibration, acceleration, and any other measurement enabled in electrical power systems, including but not limited to, substations, generating facilities, transmission lines, distribution facilities and other electrical power infrastructure and in electrical power systems equipment, including but not limited to, generators, motors, transformers, switches, power supplies, batteries and other devices employed to generate, transform, transport, distribute or store electrical energy in the United States, the Government-owned inventions described in U.S. Patent No. 7,149,374: Fiber Optic Pressure Sensor, Navy Case No. 84,557.//U.S. Patent No. 7,379,630: Multiplexed Fiber Optic Sensor System, Navy Case No. 97,488.//U.S. Patent No. 7,460,740: Intensity Modulated Fiber Optic Static Pressure Sensor System, Navy Case No. 97,279.//U.S. Patent No. 7,646,946: Intensity Modulated Fiber Optic Strain Sensor, Navy Case No. 97,005.//U.S. Patent No. 7,697,798: Fiber Optic Pressure Sensors and Catheters, Navy Case No. 97,569.//U.S. Patent Application No. 12/692,830: Miniature Fiber Optic Temperature Sensors, Navy Case No. 98,030.//U.S. Patent Application No. 12/698,646: Miniature Fiber Optic Temperature Sensors, Navy Case No. 100,134 and any continuations, divisionals or re-issues thereof.

DATES: Anyone wishing to object to the grant of this license must file written objections along with supporting evidence, if any, not later than July 6, 2010.

ADDRESSES: Written objections are to be filed with the Naval Research Laboratory, Code 1004, 4555 Overlook Avenue, SW., Washington, DC 20375–5320.

FOR FURTHER INFORMATION CONTACT: Rita Manak, Head, Technology Transfer Office, NRL Code 1004, 4555 Overlook

Avenue, SW., Washington, DC 20375–5320, telephone 202–767–3083. Due to U.S. Postal delays, please fax 202–404–7920, *e-mail: rita.manak@nrl.navy.mil* or use courier delivery to expedite response.

Authority: 35 U.S.C. 207, 37 CFR part 404.

Dated: June 10, 2010.

A.M. Vallandingham,

Lieutenant Commander, Office of the Judge Advocate General, U.S. Navy, Federal Register Liaison Officer.

[FR Doc. 2010–14872 Filed 6–18–10; 8:45 am]

BILLING CODE 3810–FF–P

DEPARTMENT OF DEFENSE

Department of the Army

Board of Visitors, United States Military Academy (USMA)

AGENCY: Agency: Department of the Army, DoD.

ACTION: Meeting notice.

SUMMARY: Under the provisions of the Federal Advisory Committee Act of 1972, the Government in the Sunshine Act of 1976, and Federal regulations governing advisory committee meetings, the Department of Defense announces a Federal advisory committee meeting for the United States Military Academy Board of Visitors. This is the 2010 Summer Meeting of the USMA Board of Visitors. Members of the Board will be provided updates on Academy issues.

DATES: Thursday, July 8, 2010, at 9 a.m.–11 a.m.

ADDRESSES: Building 600 (Taylor Hall), Superintendent's Conference Room.

FOR FURTHER INFORMATION CONTACT: The Committee's Designated Federal Officer or Point of Contact, Ms. Joy A. Pasquazi, (845) 938–5078, *Joy.Pasquazi@us.army.mil.*

SUPPLEMENTARY INFORMATION: Under the provisions of the Federal Advisory Committee Act of 1972 (5 U.S.C., Appendix, as amended), the Government in the Sunshine Act of 1976 (5 U.S.C. 552b, as amended), and 41 CFR 102–3.150, the Department of Defense announces that the following Federal advisory committee meeting will take place:

1. *Name of Committee:* United States Military Academy Board of Visitors.

2. *Date:* Thursday, July 8, 2010.

3. *Time:* 9 a.m.–11 a.m. Members of the public wishing to attend the meeting will need to show photo identification in order to gain access to the meeting location. All participants are subject to security screening.

4. *Location:* Building 600 (Taylor Hall), Superintendent's Conference Room.

5. *Purpose of the Meeting:* This is the 2010 Summer Meeting of the USMA Board of Visitors (BoV). Members of the Board will be provided updates on Academy issues.

6. *Agenda:* The Academy leadership will provide the Board updates on the following: Admissions Program, Preparatory School Program, Cadet Quality of Life, Honor Code System and Resources.

7. *Public's Accessibility to the Meeting:* Pursuant to 5 U.S.C. 552b and 41 CFR 102–3.140 through 102–3.165, and the availability of space, this meeting is open to the public. Seating is on a first-come basis.

8. *Committee's Designated Federal Officer or Point of Contact:* Ms. Joy A. Pasquazi, (845) 938–5078, *Joy.Pasquazi@us.army.mil.*

Any member of the public is permitted to file a written statement with the USMA Board of Visitors. Written statements should be sent to the Designated Federal Officer (DFO) at: United States Military Academy, Office of the Secretary of the General Staff (MASG), 646 Swift Road, West Point, NY 10996–1905 or faxed to the Designated Federal Officer (DFO) at (845) 938–3214. Written statements must be received no later than five working days prior to the next meeting in order to provide time for member consideration. By rule, no member of the public attending open meetings will be allowed to present questions from the floor or speak to any issue under consideration by the Board.

Dated: June 16, 2010.

David B. Olson,

Federal Register Liaison Officer, U.S. Army Corps of Engineers.

[FR Doc. 2010–14932 Filed 6–18–10; 8:45 am]

BILLING CODE 3710–08–P

DEPARTMENT OF EDUCATION

Notice of Proposed Information Collection Requests

AGENCY: Department of Education.

SUMMARY: The Director, Information Collection Clearance Division, Regulatory Information Management Services, Office of Management, invites comments on the proposed information collection requests as required by the Paperwork Reduction Act of 1995.

DATES: Interested persons are invited to submit comments on or before August 20, 2010.

SUPPLEMENTARY INFORMATION: Section 3506 of the Paperwork Reduction Act of 1995 (44 U.S.C. Chapter 35) requires that the Office of Management and Budget (OMB) provide interested Federal agencies and the public an early opportunity to comment on information collection requests. OMB may amend or waive the requirement for public consultation to the extent that public participation in the approval process would defeat the purpose of the information collection, violate State or Federal law, or substantially interfere with any agency's ability to perform its statutory obligations. The Director, Information Collection Clearance Division, Regulatory Information Management Services, Office of Management, publishes that notice containing proposed information collection requests prior to submission of these requests to OMB. Each proposed information collection, grouped by office, contains the following: (1) Type of review requested, *e.g.* new, revision, extension, existing or reinstatement; (2) Title; (3) Summary of the collection; (4) Description of the need for, and proposed use of, the information; (5) Respondents and frequency of collection; and (6) Reporting and/or Recordkeeping burden. OMB invites public comment.

The Department of Education is especially interested in public comment addressing the following issues: (1) Is this collection necessary to the proper functions of the Department; (2) will this information be processed and used in a timely manner; (3) is the estimate of burden accurate; (4) how might the Department enhance the quality, utility, and clarity of the information to be collected; and (5) how might the Department minimize the burden of this collection on the respondents, including through the use of information technology.

Dated: June 15, 2010.

Darrin A. King,

Director, Information Collection Clearance Division, Regulatory Information Management Services, Office of Management.

Federal Student Aid

Type of Review: Revision of a currently approved collection.

Title: William D. Ford Federal Direct Loan (Direct Loan) Program, Repayment Plan Selection Form.

Frequency: On Occasion.

Affected Public: Individuals or household.

Reporting and Recordkeeping Hour Burden:

Responses: 660,000.

Burden Hours: 217,800.

Abstract: A Direct Loan Program borrower may use the Repayment Plan Selection form to select an initial repayment plan prior to entering repayment, or to request a change from the borrower's current repayment plan to a different repayment plan. For borrowers who select the Income Contingent Repayment (ICR) Plan or the Income-Based Repayment (IBR) Plan, the Repayment Plan Selection form also serves as the means by which the U.S. Department of Education collects the information needed to calculate the borrower's monthly payment amount and, in the case of the IBR plan, the information needed to determine the borrower's initial eligibility to repay under this plan.

Requests for copies of the proposed information collection request may be accessed from *http://edicsweb.ed.gov,* by selecting the "Browse Pending Collections" link and by clicking on link number 4340. When you access the information collection, click on "Download Attachments" to view. Written requests for information should be addressed to U.S. Department of Education, 400 Maryland Avenue, SW., LBJ, Washington, DC 20202–4537. Requests may also be electronically mailed to *ICDocketMgr@ed.gov* or faxed to 202–401–0920. Please specify the complete title of the information collection when making your request.

Comments regarding burden and/or the collection activity requirements should be electronically mailed to *ICDocketMgr@ed.gov.* Individuals who use a telecommunications device for the deaf (TDD) may call the Federal Information Relay Service (FIRS) at 1–800–877–8339.

[FR Doc. 2010–14822 Filed 6–18–10; 8:45 am]

BILLING CODE 4000–01–P

DEPARTMENT OF EDUCATION

Notice of Proposed Information Collection Requests

AGENCY: Department of Education.

SUMMARY: The Director, Information Collection Clearance Division, Regulatory Information Management Services, Office of Management, invites comments on the proposed information collection requests as required by the Paperwork Reduction Act of 1995.

DATES: Interested persons are invited to submit comments on or before August 20, 2010.

SUPPLEMENTARY INFORMATION: Section 3506 of the Paperwork Reduction Act of 1995 (44 U.S.C. Chapter 35) requires that the Office of Management and Budget (OMB) provide interested Federal agencies and the public an early opportunity to comment on information collection requests. OMB may amend or waive the requirement for public consultation to the extent that public participation in the approval process would defeat the purpose of the information collection, violate State or Federal law, or substantially interfere with any agency's ability to perform its statutory obligations. The Director, Information Collection Clearance Division, Regulatory Information Management Services, Office of Management, publishes that notice containing proposed information collection requests prior to submission of these requests to OMB. Each proposed information collection, grouped by office, contains the following: (1) Type of review requested, *e.g.* new, revision, extension, existing or reinstatement; (2) Title; (3) Summary of the collection; (4) Description of the need for, and proposed use of, the information; (5) Respondents and frequency of collection; and (6) Reporting and/or Recordkeeping burden. OMB invites public comment.

The Department of Education is especially interested in public comment addressing the following issues: (1) Is this collection necessary to the proper functions of the Department; (2) will this information be processed and used in a timely manner; (3) is the estimate of burden accurate; (4) how might the Department enhance the quality, utility, and clarity of the information to be collected; and (5) how might the Department minimize the burden of this collection on the respondents, including through the use of information technology.

Dated: June 15, 2010.

Darrin A. King,

Director, Information Collection Clearance Division, Regulatory Information Management Services, Office of Management.

Federal Student Aid

Type of Review: Revision.

Title: William D. Ford Federal Direct Loan (Direct Loan) Program Federal Direct PLUS Loan Master Promissory Note and Endorser Addendum.

Frequency: On Occasion.

Affected Public: Individuals or household.

Reporting and Recordkeeping Hour Burden:

Responses: 1,364,219.

Burden Hours: 682,110.

Abstract: The Federal PLUS Loan Master Promissory Note (Direct PLUS Loan MPN) serves as the means by which an individual applies for and agrees to repay a Federal Direct PLUS Loan. The Direct PLUS Loan MPN also informs the borrower of the terms and conditions of Direct PLUS Loan and includes a statement of borrower's rights and responsibilities. A Direct PLUS Loan borrower must not have an adverse credit history. If an applicant for a Direct PLUS Loan is determined to have an adverse credit history, the applicant may qualify for a Direct PLUS Loan by obtaining an endorser who does not have an adverse credit history. The Endorser Addendum serves as the means by which an endorser agrees to repay the Direct PLUS Loan if the borrower does not repay it.

Requests for copies of the proposed information collection request may be accessed from *http://edicsweb.ed.gov,* by selecting the "Browse Pending Collections" link and by clicking on link number 4339. When you access the information collection, click on "Download Attachments" to view. Written requests for information should be addressed to U.S. Department of Education, 400 Maryland Avenue, SW., LBJ, Washington, DC 20202–4537. Requests may also be electronically mailed to *ICDocketMgr@ed.gov* or faxed to 202–401–0920. Please specify the complete title of the information collection when making your request.

Comments regarding burden and/or the collection activity requirements should be electronically mailed to *ICDocketMgr@ed.gov.* Individuals who use a telecommunications device for the deaf (TDD) may call the Federal Information Relay Service (FIRS) at 1–800–877–8339.

[FR Doc. 2010–14821 Filed 6–18–10; 8:45 am]

BILLING CODE 4000–01–P

DEPARTMENT OF EDUCATION

Office of Special Education and Rehabilitative Services Overview Information; National Institute on Disability and Rehabilitation Research (NIDRR)—Disability and Rehabilitation Research Projects and Centers Program—Rehabilitation Research and Training Centers (RRTCs)—Employment Outcomes for Individuals Who Are Blind or Visually Impaired; Notice Inviting Applications for New Awards for Fiscal Year (FY) 2010.

Catalog of Federal Domestic Assistance (CFDA) Number: 84.133B–6.

Dates: Applications Available: June 21, 2010.

Date of Pre-Application Meeting: July 14, 2010.

Deadline for Transmittal of Applications: August 20, 2010.

Full Text of Announcement

I. Funding Opportunity Description

Purpose of Program: The purpose of the RRTC program is to improve the effectiveness of services authorized under the Rehabilitation Act of 1973, as amended, through advanced research, training, technical assistance, and dissemination activities in general problem areas, as specified by NIDRR. Such activities are designed to benefit rehabilitation service providers, individuals with disabilities, and the family members or other authorized representatives of individuals with disabilities.

Additional information on the RRTC program can be found at: *http://www.ed.gov/rschstat/research/pubs/res-program.html#RRTC.*

Priorities: NIDRR has established two absolute priorities for this competition.

Absolute Priorities: The *General Rehabilitation Research and Training Centers (RRTC) Requirements* priority is from the notice of final priorities for the Disability and Rehabilitation Research Projects and Centers program, published in the **Federal Register** on February 1, 2008 (73 FR 6132). The *Employment Outcomes for Individuals who are Blind or Visually Impaired* priority is from the notice of final priority for the Disability and Rehabilitation Research Projects and Centers Program, published elsewhere in this issue of the **Federal Register.**

For FY 2010, these priorities are absolute priorities. Under 34 CFR 75.105(c)(3) we consider only applications that meet these priorities.

These priorities are:

General Rehabilitation Research and Training Centers (RRTC) Requirements and *Employment Outcomes for Individuals who are Blind or Visually Impaired.*

Note: The full text of each of these priorities is included in the notice of final priorities published in the **Federal Register** and in the applicable application package.

Program Authority: 29 U.S.C. 762(g) and 764(b)(2).

Applicable Regulations: (a) The Education Department General Administrative Regulations (EDGAR) in 34 CFR parts 74, 75, 77, 80, 81, 82, 84, 85, 86, and 97. (b) The regulations for this program in 34 CFR part 350. (c) The notice of final priorities for the Disability and Rehabilitation Research Projects and Centers program, published in the **Federal Register** on February 1, 2008 (73 FR 6132). (d) The notice of final priority for the Disability and Rehabilitation Research Projects and Centers program, published elsewhere in this issue of the **Federal Register.**

Note: The regulations in 34 CFR part 86 apply to institutions of higher education (IHEs) only.

II. Award Information

Type of Award: Discretionary grants.

Estimated Available Funds: $850,000.

Maximum Award: We will reject any application that proposes a budget exceeding $850,000 for a single budget period of 12 months. The Assistant Secretary for Special Education and Rehabilitative Services may change the maximum amount through a notice published in the **Federal Register.**

Note: The maximum amount includes direct and indirect costs. A grantee may not collect more than 15 percent of the total grant award as indirect cost charges (34 CFR 350.23).

Estimated Number of Awards: 1.

Note: The Department is not bound by any estimates in this notice.

Project Period: Up to 60 months.

III. Eligibility Information

1. *Eligible Applicants:* States; public or private agencies, including for-profit agencies; public or private organizations, including for-profit organizations; IHEs; and Indian tribes and tribal organizations.

2. *Cost Sharing or Matching:* This competition does not require cost sharing or matching.

IV. Application and Submission Information

1. *Address to Request Application Package:* ED Pubs, U.S. Department of Education, P.O. Box 22207, Alexandria, VA 22304. Telephone, toll free: 1–877–433–7827. FAX: (703) 605–6794. If you use a telecommunications device for the deaf (TDD), call, toll free: 1–877–576–7734.

You can contact ED Pubs at its Web site, also: *http://www.EDPubs.gov* or at its e-mail address: *edpubs@inet.ed.gov.*

If you request an application package from ED Pubs, be sure to identify this program or competition as follows: CFDA number 84.133B–6.

Individuals with disabilities can obtain a copy of the application package in an accessible format (*e.g.,* braille, large print, audiotape, or computer diskette) by contacting the person or team listed under *Accessible Format* in section VIII of this notice.

2. *Content and Form of Application Submission:* Requirements concerning the content of an application, together with the forms you must submit, are in the application package for this competition.

Page Limit: The application narrative (Part III of the application) is where you, the applicant, address the selection criteria that reviewers use to evaluate your application. We recommend that you limit Part III to the equivalent of no more than 125 pages, using the following standards:

- A "page" is 8.5″ x 11″, on one side only, with 1″ margins at the top, bottom, and both sides.
- Double space (no more than three lines per vertical inch) all text in the application narrative. Single spacing may be used for titles, headings, footnotes, quotations, references, and captions, as well as all text in charts, tables, figures, and graphs.
- Use a font that is either 12 point or larger or no smaller than 10 pitch (characters per inch).
- Use one of the following fonts: Times New Roman, Courier, Courier New, or Arial. An application submitted in any other font (including Times Roman or Arial Narrow) will not be accepted.

The recommended page limit does not apply to Part I, the cover sheet; Part II, the budget section, including the narrative budget justification; Part IV, the assurances and certifications; or the one-page abstract, the resumes, the bibliography, or the letters of support. However, the recommended page limit does apply to all of the application narrative section (Part III).

The application package will provide instructions for completing all components to be included in the application. Each application must include a cover sheet (Standard Form 424); budget requirements (ED Form 524) and narrative justification; other required forms; an abstract, Human Subjects narrative, Part III narrative; resumes of staff; and other related materials, if applicable.

3. *Submission Dates and Times:*

Applications Available: June 21, 2010.

Date of Pre-Application Meeting: Interested parties are invited to participate in a pre-application meeting and to receive information and technical assistance through individual consultation with NIDRR staff. The pre-application meeting will be held on July 14, 2010. Interested parties may participate in this meeting by conference call with NIDRR staff from the Office of Special Education and Rehabilitative Services between 1:00 p.m. and 3:00 p.m., Washington, DC time. NIDRR staff also will be available from 3:30 p.m. to 4:30 p.m., Washington, DC time, on the same day, by telephone, to provide information and technical assistance through individual consultation. For further information or to make arrangements to participate in the meeting via

conference call or for an individual consultation, contact Marlene Spencer, U.S. Department of Education, Potomac Center Plaza (PCP), room 5133, 550 12th Street, SW., Washington, DC 20202. Telephone: (202) 245–7532 or by e-mail: *Marlene.Spencer@ed.gov.*

Deadline for Transmittal of Applications: August 20, 2010.

Applications for grants under this competition must be submitted electronically using the Electronic Grant Application System (e-Application) accessible through the Department's e-Grants site. For information (including dates and times) about how to submit your application electronically, or in paper format by mail or hand delivery if you qualify for an exception to the electronic submission requirement, please refer to section IV. 7. *Other Submission Requirements* of this notice.

We do not consider an application that does not comply with the deadline requirements.

Individuals with disabilities who need an accommodation or auxiliary aid in connection with the application process should contact the person listed under **FOR FURTHER INFORMATION CONTACT** in section VII of this notice. If the Department provides an accommodation or auxiliary aid to an individual with a disability in connection with the application process, the individual's application remains subject to all other requirements and limitations in this notice.

4. *Intergovernmental Review:* This program is not subject to Executive Order 12372 and the regulations in 34 CFR part 79.

5. *Funding Restrictions:* We reference regulations outlining funding restrictions in the *Applicable Regulations* section of this notice.

6. *Data Universal Numbering System Number, Taxpayer Identification Number, and Central Contractor Registry:* To do business with the Department of Education, (1) you must have a Data Universal Numbering System (DUNS) number and a Taxpayer Identification Number (TIN); (2) you must register both of those numbers with the Central Contractor Registry (CCR), the Government's primary registrant database; and (3) you must provide those same numbers on your application.

You can obtain a DUNS number from Dun and Bradstreet. A DUNS number can be created within one business day.

If you are a corporate entity, agency, institution, or organization, you can obtain a TIN from the Internal Revenue Service. If you are an individual, you can obtain a TIN from the Internal Revenue Service or the Social Security Administration. If you need a new TIN, please allow 2–5 weeks for your TIN to become active.

The CCR registration process may take five or more business days to complete. If you are currently registered with the CCR, you may not need to make any changes. However, please make certain that the TIN associated with your DUNS number is correct. Also note that you will need to update your CCR registration on an annual basis. This may take three or more business days to complete.

7. *Other Submission Requirements:* Applications for grants under this competition must be submitted electronically unless you qualify for an exception to this requirement in accordance with the instructions in this section.

a. *Electronic Submission of Applications.*

Applications for grants under the Rehabilitation Research and Training Centers (RRTCs)—CFDA Number 84.133B–6 must be submitted electronically using e-Application, accessible through the Department's e-Grants Web site at: *http://e-grants.ed.gov.*

We will reject your application if you submit it in paper format unless, as described elsewhere in this section, you qualify for one of the exceptions to the electronic submission requirement *and* submit, no later than two weeks before the application deadline date, a written statement to the Department that you qualify for one of these exceptions. Further information regarding calculation of the date that is two weeks before the application deadline date is provided later in this section under *Exception to Electronic Submission Requirement.*

While completing your electronic application, you will be entering data online that will be saved into a database. You may not e-mail an electronic copy of a grant application to us.

Please note the following:

- You must complete the electronic submission of your grant application by 4:30:00 p.m., Washington, DC time, on the application deadline date. E–Application will not accept an application for this competition after 4:30:00 p.m., Washington, DC time, on the application deadline date. Therefore, we strongly recommend that you do not wait until the application deadline date to begin the application process.
- The hours of operation of the e-Grants Web site are 6:00 a.m. Monday until 7:00 p.m. Wednesday; and 6:00 a.m. Thursday until 8:00 p.m. Sunday, Washington, DC time. Please note that, because of maintenance, the system is unavailable between 8:00 p.m. on Sundays and 6:00 a.m. on Mondays, and between 7:00 p.m. on Wednesdays and 6:00 a.m. on Thursdays, Washington, DC time. Any modifications to these hours are posted on the e-Grants Web site.
- You will not receive additional point value because you submit your application in electronic format, nor will we penalize you if you qualify for an exception to the electronic submission requirement, as described elsewhere in this section, and submit your application in paper format.
- You must submit all documents electronically, including all information you typically provide on the following forms: the Application for Federal Assistance (SF 424), the Department of Education Supplemental Information for SF 424, Budget Information—Non-Construction Programs (ED 524), and all necessary assurances and certifications. You must attach any narrative sections of your application as files in a .DOC (document), .RTF (rich text), or .PDF (Portable Document) format. If you upload a file type other than the three file types specified in this paragraph or submit a password protected file, we will not review that material.
- Your electronic application must comply with any page limit requirements described in this notice.
- Prior to submitting your electronic application, you may wish to print a copy of it for your records.
- After you electronically submit your application, you will receive an automatic acknowledgment that will include a PR/Award number (an identifying number unique to your application).
- Within three working days after submitting your electronic application, fax a signed copy of the SF 424 to the Application Control Center after following these steps:

(1) Print SF 424 from e-Application.

(2) The applicant's Authorizing Representative must sign this form.

(3) Place the PR/Award number in the upper right hand corner of the hard-copy signature page of the SF 424.

(4) Fax the signed SF 424 to the Application Control Center at (202) 245–6272.

- We may request that you provide us original signatures on other forms at a later date.

Application Deadline Date Extension in Case of e-Application Unavailability: If you are prevented from electronically submitting your application on the application deadline date because

e-Application is unavailable, we will grant you an extension of one business day to enable you to transmit your application electronically, by mail, or by hand delivery. We will grant this extension if—

(1) You are a registered user of e-Application and you have initiated an electronic application for this competition; and

(2) (a) E-Application is unavailable for 60 minutes or more between the hours of 8:30 a.m. and 3:30 p.m., Washington, DC time, on the application deadline date; or

(b) E-Application is unavailable for any period of time between 3:30 p.m. and 4:30:00 p.m., Washington, DC time, on the application deadline date.

We must acknowledge and confirm these periods of unavailability before granting you an extension. To request this extension or to confirm our acknowledgment of any system unavailability, you may contact either (1) the person listed elsewhere in this notice under **FOR FURTHER INFORMATION CONTACT** (*see* VII. Agency Contact) or (2) the e-Grants help desk at 1–888–336–8930. If e-Application is unavailable due to technical problems with the system and, therefore, the application deadline is extended, an e-mail will be sent to all registered users who have initiated an e-Application. Extensions referred to in this section apply only to the unavailability of e-Application.

Exception to Electronic Submission Requirement: You qualify for an exception to the electronic submission requirement, and may submit your application in paper format, if you are unable to submit an application through e-Application because—

- You do not have access to the Internet; or
- You do not have the capacity to upload large documents to e-Application; and
- No later than two weeks before the application deadline date (14 calendar days or, if the fourteenth calendar day before the application deadline date falls on a Federal holiday, the next business day following the Federal holiday), you mail or fax a written statement to the Department, explaining which of the two grounds for an exception prevents you from using the Internet to submit your application. If you mail your written statement to the Department, it must be postmarked no later than two weeks before the application deadline date. If you fax your written statement to the Department, we must receive the faxed statement no later than two weeks before the application deadline date.

Address and mail or fax your statement to: Marlene Spencer, U.S. Department of Education, 400 Maryland Avenue, SW., room 5133, PCP, Washington, DC 20202–2700. FAX: (202) 245–7323.

Your paper application must be submitted in accordance with the mail or hand delivery instructions described in this notice.

b. *Submission of Paper Applications by Mail.*

If you qualify for an exception to the electronic submission requirement, you may mail (through the U.S. Postal Service or a commercial carrier) your application to the Department. You must mail the original and two copies of your application, on or before the application deadline date, to the Department at the following address:

U.S. Department of Education,
Application Control Center,
Attention: (CFDA Number 84.133B–6), LBJ Basement Level 1, 400 Maryland Avenue, SW., Washington, DC 20202–4260.

You must show proof of mailing consisting of one of the following:

(1) A legibly dated U.S. Postal Service postmark.

(2) A legible mail receipt with the date of mailing stamped by the U.S. Postal Service.

(3) A dated shipping label, invoice, or receipt from a commercial carrier.

(4) Any other proof of mailing acceptable to the Secretary of the U.S. Department of Education.

If you mail your application through the U.S. Postal Service, we do not accept either of the following as proof of mailing:

(1) A private metered postmark.

(2) A mail receipt that is not dated by the U.S. Postal Service.

If your application is postmarked after the application deadline date, we will not consider your application.

Note: The U.S. Postal Service does not uniformly provide a dated postmark. Before relying on this method, you should check with your local post office.

c. *Submission of Paper Applications by Hand Delivery.*

If you qualify for an exception to the electronic submission requirement, you (or a courier service) may deliver your paper application to the Department by hand. You must deliver the original and two copies of your application, by hand, on or before the application deadline date, to the Department at the following address:

U.S. Department of Education,
Application Control Center,
Attention: (CFDA Number 84.133B–6), 550 12th Street, SW., Room 7041, Potomac Center Plaza, Washington, DC 20202–4260.

The Application Control Center accepts hand deliveries daily between 8:00 a.m. and 4:30:00 p.m., Washington, DC time, except Saturdays, Sundays, and Federal holidays.

Note for Mail or Hand Delivery of Paper Applications: If you mail or hand deliver your application to the Department—

(1) You must indicate on the envelope and—if not provided by the Department—in Item 11 of the SF 424 the CFDA number, including suffix letter, if any, of the competition under which you are submitting your application; and

(2) The Application Control Center will mail to you a notification of receipt of your grant application. If you do not receive this grant notification within 15 business days from the application deadline date, you should call the U.S. Department of Education Application Control Center at (202) 245–6288.

V. Application Review Information

Selection Criteria: The selection criteria for this competition are from 34 CFR 350.54 and are listed in the application package.

VI. Award Administration Information

1. *Award Notices:* If your application is successful, we notify your U.S. Representative and U.S. Senators and send you a Grant Award Notification (GAN). We may notify you informally, also.

If your application is not evaluated or not selected for funding, we notify you.

2. *Administrative and National Policy Requirements:* We identify administrative and national policy requirements in the application package and reference these and other requirements in the *Applicable Regulations* section of this notice.

We reference the regulations outlining the terms and conditions of an award in the *Applicable Regulations* section of this notice and include these and other specific conditions in the GAN. The GAN also incorporates your approved application as part of your binding commitments under the grant.

3. *Reporting:* At the end of your project period, you must submit a final performance report, including financial information, as directed by the Secretary. If you receive a multi-year award, you must submit an annual performance report that provides the most current performance and financial expenditure information as directed by the Secretary under 34 CFR 75.118. The Secretary may also require more frequent performance reports under 34 CFR 75.720(c). For specific requirements on reporting, please go to

http://www.ed.gov/fund/grant/apply/appforms/appforms.html.

Note: NIDRR will provide information by letter to grantees on how and when to submit the final performance report.

4. *Performance Measures:* To evaluate the overall success of its research program, NIDRR assesses the quality of its funded projects through a review of grantee performance and products. Each year, NIDRR examines a portion of its grantees to determine:

- The percentage of NIDRR-supported fellows, post-doctoral trainees, and doctoral students who publish results of NIDRR-sponsored research in refereed journals.
- The number of accomplishments (*e.g.,* new or improved tools, methods, discoveries, standards, interventions, programs, or devices) developed or tested with NIDRR funding that have been judged by expert panels to be of high quality and to advance the field.
- The average number of publications per award based on NIDRR-funded research and development activities in refereed journals.
- The percentage of new NIDRR grants that assess the effectiveness of interventions, programs, and devices using rigorous methods.

Each grantee must annually report on its performance through NIDRR's Annual Performance Report (APR) form. NIDRR uses APR information submitted by grantees to assess progress on these measures.

VII. Agency Contact

For Further Information Contact: Marlene Spencer, U.S. Department of Education, 400 Maryland Avenue, SW., room 5133, PCP, Washington, DC 20202–2700. Telephone: (202) 245–7532 or by e-mail: *Marlene.Spencer@ed.gov.*

If you use a TDD, call the Federal Relay Service (FRS), toll free, at 1–800–877–8339.

VIII. Other Information

Accessible Format: Individuals with disabilities can obtain this document and a copy of the application package in an accessible format (*e.g.,* braille, large print, audiotape, or computer diskette) by contacting the Grants and Contracts Services Team, U.S. Department of Education, 400 Maryland Avenue, SW., room 5075, PCP, Washington, DC 20202–2550. Telephone: (202) 245–7363. If you use a TDD, call the FRS, toll-free, at 1–800–877–8339.

Electronic Access to This Document: You can view this document, as well as all other documents of this Department published in the **Federal Register,** in text or Adobe Portable Document Format (PDF) on the Internet at the following site: *http://www.ed.gov/news/fedregister.* To use PDF you must have Adobe Acrobat Reader, which is available free at this site.

Note: The official version of this document is the document published in the **Federal Register.** Free Internet access to the official edition of the **Federal Register** and the Code of Federal Regulations is available on GPO Access at: *http://www.gpoaccess.gov/nara/index.html.*

Dated: June 16, 2010.

Alexa Posny,

Assistant Secretary for Special Education and Rehabilitative Services.

[FR Doc. 2010–14988 Filed 6–18–10; 8:45 am]

BILLING CODE 4000–01–P

DEPARTMENT OF EDUCATION

Office of Postsecondary Education; Overview Information; Predominantly Black Institutions Formula Grant Program; Notice Inviting Applications for New Awards for Fiscal Year (FY) 2010.

Catalog of Federal Domestic Assistance (CFDA) Number: 84.031P.

DATES: *Applications Available:* June 21, 2010.

Deadline for Transmittal of Phase I of Applications: July 21, 2010.

Deadline for Transmittal of Phase II of Applications: August 20, 2010.

Deadline for Intergovernmental Review: October 19, 2010.

Full Text of Announcement

I. Funding Opportunity Description

Purpose of Program: Through the Predominantly Black Institutions (PBI) Formula Grant Program, the Department makes grant awards to eligible institutions to plan, develop, undertake, and implement programs to enhance their capacity to serve more low- and middle-income Black American students; to expand higher education opportunities for eligible students by encouraging college preparation and student persistence in secondary school and postsecondary education; and to strengthen the financial ability of the institutions to serve the academic needs of these students.

Program Authority: Title III, part A, section 318 of the Higher Education Act of 1965, as amended (HEA) (20 U.S.C. 1059e).

Applicable Regulations: The Education Department General Administrative Regulations (EDGAR) in 34 CFR parts 74, 75, 77, 79, 82, 84, 85, 86, 97, 98, and 99.

II. Award Information

Type of Award: Formula Grant.

Estimated Available Funds: $10,801,000.

Estimated Average Size of Awards: Grants awarded under the PBI Formula Grant Program will be allotted to eligible institutions based on the formula included in section 318(e) of the HEA (20 U.S.C. 1059e(e)), with no grantee allotted less than $250,000.

Estimated Number of Awards: All applicant institutions who meet the eligibility requirements will receive a portion of the total appropriations for the PBI Formula Grant Program.

Note: The Department is not bound by any estimates in this notice.

Project Period: 12 months.

III. Eligibility Information

1. *Eligible Applicants:* To be eligible, an applicant must have previously submitted the "Application for Designation as an Eligible Institution" and received FY 2010 designation as an eligible institution for programs under title III and title V of the HEA. The regulations explaining the standards for designation can be found in 34 CFR 607.2 through 607.5. In addition, an applicant must—

(1) Have an enrollment of needy undergraduate students as defined in section 318(b)(2) of the HEA;

(2) Have an average educational and general expenditure that is low, per full-time equivalent undergraduate student, in comparison with the average educational and general expenditure per full-time equivalent undergraduate student of institutions that offer similar instruction, except that the Secretary may apply the waiver requirements described in section 392(b) of the HEA to this subparagraph in the same manner as the Secretary applies the waiver requirements to section 312(b)(1)(B) of the HEA;

(3) Have an enrollment of undergraduate students that is not less than 40 percent Black American students;

(4) Be legally authorized to provide, and provide, within the State an educational program for which the institution of higher education awards a baccalaureate degree or, in the case of a junior or community college, an associate's degree;

(5) Be accredited by a nationally recognized accrediting agency or association determined by the Secretary to be a reliable authority as to the quality of training offered or is, according to such an agency or association, making reasonable progress toward accreditation; and

(6) Not be receiving funds under any other provision of part A or part B of title III of the HEA; or part A of title V of the HEA; or be authorized to receive an annual appropriation under the Act of March 2, 1867 (20 U.S.C. 123).

To be eligible for a grant under the PBI Formula Grant Program, an applicant institution must also meet the definition of a *Predominantly Black Institution* in section 318(b)(6) of the HEA. The term *Predominantly Black Institution* means an institution of higher education, as defined in section 101(a) of the HEA—

(A) That is an eligible institution with not less than 1,000 undergraduate students;

(B) At which not less than 50 percent of the undergraduate students enrolled at the eligible institution are low-income individuals or first-generation college students; and

(C) At which not less than 50 percent of the undergraduate students are enrolled in an educational program leading to a bachelor's or associate's degree that the eligible institution is licensed to award by the State (defined as each of the 50 States and the District of Columbia) in which the eligible institution is located.

2. *Cost Sharing or Matching:* This program does not require cost sharing or matching unless the grantee uses a portion of its grant for establishing or improving an endowment fund. If a grantee uses a portion of its grant for endowment fund purposes, it must match those grant funds with non-Federal funds (20 U.S.C. 1059e(d)(3)).

IV. Application and Submission Information

1. *Address To Request Application Package:* You can obtain an application package via the Internet or from the Department. To obtain a copy via the Internet, use the following address for the PBI Formula Grant Program Web site: *http://www.ed.gov/programs/pbihea/index.html.* To obtain a copy from the Department, write, fax, or call the following: Sara Starke, U.S. Department of Education, 1990 K Street, NW., room 6019, Washington, DC 20006–8524. *Telephone:* (202) 502–7688, or by *e-mail: sara.starke@ed.gov.*

If you use a telecommunications device for the deaf (TDD), call the Federal Relay Service (FRS), toll free, at 1–800–877–8339.

Individuals with disabilities can obtain a copy of the application package in an accessible format (*e.g.,* braille, large print, audiotape, or computer diskette) by contacting the program contact person listed in this section.

2. *Content and Form of Application Submission:* The application process for this program has two phases: Phase I involves submitting data used to run the funding formula; Phase II includes the narrative project plan and standard forms. The deadline dates for submitting Phases I and II of the application are listed in this notice. Other requirements concerning the content of an application, together with the forms you must submit, are in the application package for this program.

3. *Submission Dates and Times:*

Applications Available: June 21, 2010.

Deadline for Transmittal of Phase I of Applications: July 21, 2010.

Deadline for Transmittal of Phase II of Applications: August 20, 2010.

Applications for grants under this competition must be submitted electronically as an e-mail attachment to *pbiprogram@ed.gov* by 12:00:00 a.m. Washington, DC time, on the deadline date.

We do not consider an application that does not comply with the deadline requirements.

Deadline for Intergovernmental Review: October 19, 2010.

4. *Intergovernmental Review:* This program is subject to Executive Order 12372 and the regulations in 34 CFR part 79. Information about Intergovernmental Review of Federal Programs under Executive Order 12372 is in the application package for this program.

5. *Funding Restrictions:* We reference regulations outlining funding restrictions in the *Applicable Regulations* section in this notice.

6. *Data Universal Numbering System Number, Taxpayer Identification Number, and Central Contractor Registry:* To do business with the Department of Education, (1) You must have a Data Universal Numbering System (DUNS) number and a Taxpayer Identification Number (TIN); (2) you must register both of those numbers with the Central Contractor Registry (CCR), the Government's primary registrant database; and (3) you must provide those same numbers on your application.

You can obtain a DUNS number from Dun and Bradstreet. A DUNS number can be created within one business day.

If you are a corporate entity, agency, institution, or organization, you can obtain a TIN from the Internal Revenue Service. If you are an individual, you can obtain a TIN from the Internal Revenue Service or the Social Security Administration. If you need a new TIN, please allow 2–5 weeks for your TIN to become active.

The CCR registration process may take five or more business days to complete. If you are currently registered with the CCR, you may not need to make any changes. However, please make certain that the TIN associated with your DUNS number is correct. Also note that you will need to update your CCR registration on an annual basis. This may take three or more business days to complete.

7. *Other Submission Requirements:* Applications for grants under this program must be submitted electronically unless you qualify for an exception to this requirement in accordance with the instructions in this section.

a. *Electronic Submission of Applications.*

Applications for grants under the Predominantly Black Institutions Formula Grant Program—CFDA Number 84.031P must be submitted electronically via e-mail to *pbiprogram@ed.gov.*

We will reject your application if you submit it in paper format unless, as described elsewhere in this section, you qualify for one of the exceptions to the electronic submission requirement *and* submit, no later than two weeks before the application deadline date, a written statement to the Department that you qualify for one of these exceptions. Further information regarding calculation of the date that is two weeks before the application deadline date is provided later in this section under *Exception to Electronic Submission Requirement.*

You may access the electronic grant application for the PBI Program at *http://www.ed.gov/programs/pbihea/index.html.*

Please note the following:

- You must complete the electronic submission of your grant application by 12:00:00 a.m., Washington, DC time, on the application deadline date. We will not accept an application for this program after 12:00:00 a.m., Washington, DC time, on the application deadline date. Therefore, we strongly recommend that you do not wait until the application deadline date to begin the application process.
- You will not receive additional point value because you submit your application in electronic format, nor will we penalize you if you qualify for an exception to the electronic submission requirement, as described elsewhere in this section, and submit your application in paper format.
- You must submit all documents electronically, including all information you typically provide on the following forms: The Application for Federal

Assistance (SF 424), the Department of Education Supplemental Information for SF 424, Budget Information—Non-Construction Programs (ED 524), and all necessary assurances and certifications. You must attach any narrative sections of your application as files in a .DOC (document), .RTF (rich text), or .PDF (Portable Document) format. If you upload a file type other than the three file types specified in this paragraph or submit a password protected file, we will not review that material.

- Your electronic application must comply with any page limit requirements described in this notice.
- Prior to submitting your electronic application, you may wish to print a copy of it for your records.
- Within three working days after submitting Phase II of your electronic application, fax a signed copy of the SF 424 to the Application Control Center after following these steps:

(1) Print SF 424 from e-Application.

(2) The applicant's Authorizing Representative must sign this form.

(3) Place the PR/Award number in the upper right hand corner of the hard-copy signature page of the SF 424.

(4) Fax the signed SF 424 to the Application Control Center at (202) 245–6272.

- We may request that you provide us original signatures on other forms at a later date.

Exception to Electronic Submission Requirement: You qualify for an exception to the electronic submission requirement and may submit your application in paper format if you are unable to submit an application via e-mail because—

- You do not have access to the Internet; *and*
- No later than two weeks before the application deadline date (14 calendar days or, if the fourteenth calendar day before the application deadline date falls on a Federal holiday, the next business day following the Federal holiday), you mail or fax a written statement to the Department, explaining which of the two grounds for an exception prevents you from using the Internet to submit your application. If you mail your written statement to the Department, it must be postmarked no later than two weeks before the application deadline date. If you fax your written statement to the Department, we must receive the faxed statement no later than two weeks before the application deadline date.

Address and mail or fax your statement to: Sara Starke, U.S. Department of Education, 1990 K Street, NW., room 6019, Washington, DC 20006–8524. *Fax:* (202) 502–7859.

Your paper application must be submitted in accordance with the mail or hand delivery instructions described in this notice.

b. *Submission of Paper Applications by Mail.*

If you qualify for an exception to the electronic submission requirement, you may mail (through the U.S. Postal Service or a commercial carrier) your application to the Department. You must mail the original and two copies of your application, on or before the application deadline date, to the Department at the following address: U.S. Department of Education, Application Control Center, *Attention:* (CFDA Number 84.031P), LBJ Basement Level 1, 400 Maryland Avenue, SW., Washington, DC 20202–4260.

You must show proof of mailing consisting of one of the following:

(1) A legibly dated U.S. Postal Service postmark.

(2) A legible mail receipt with the date of mailing stamped by the U.S. Postal Service.

(3) A dated shipping label, invoice, or receipt from a commercial carrier.

(4) Any other proof of mailing acceptable to the Secretary of the U.S. Department of Education.

If you mail your application through the U.S. Postal Service, we do not accept either of the following as proof of mailing:

(1) A private metered postmark.

(2) A mail receipt that is not dated by the U.S. Postal Service.

If your application is postmarked after the application deadline date, we will not consider your application.

Note: The U.S. Postal Service does not uniformly provide a dated postmark. Before relying on this method, you should check with your local post office.

c. *Submission of Paper Applications by Hand Delivery.*

If you qualify for an exception to the electronic submission requirement, you (or a courier service) may deliver your paper application to the Department by hand. You must deliver the original and two copies of your application by hand, on or before the application deadline date, to the Department at the following address:

U.S. Department of Education, Application Control Center, *Attention:* (CFDA Number 84.031P), 550 12th Street, SW., Room 7041, Potomac Center Plaza, Washington, DC 20202–4260. The Application Control Center accepts hand deliveries daily between 8:00 a.m. and 4:30:00 p.m., Washington, DC time, except Saturdays, Sundays, and Federal holidays.

Note for Mail or Hand Delivery of Paper Applications: If you mail or hand deliver your application to the Department—

(1) You must indicate on the envelope and—if not provided by the Department—in Item 11 of the SF 424 the CFDA number, including suffix letter, if any, of the competition under which you are submitting your application; and

(2) The Application Control Center will mail to you a notification of receipt of your grant application. If you do not receive this notification within 15 business days from the application deadline date, you should call the U.S. Department of Education Application Control Center at (202) 245–6288.

V. Application Review Information

Grants awarded under the PBI Formula Grant Program are based on a formula. All applicants who meet the eligibility requirements will receive a portion of the total appropriations for this program based on the formula contained in section 318(e) of the HEA (20 U.S.C. 1059e(e)).

Department staff will review applications to determine eligibility and to ensure that all activities proposed in the application are allowable under section 318(d) of the HEA (20 U.S.C. 1059e(d)).

VI. Award Administration Information

1. *Reporting:* At the end of your project period, you must submit a final performance report, including financial information, as directed by the Secretary. If you receive a multi-year award, you must submit an annual performance report that provides the most current performance and financial expenditure information as directed by the Secretary under 34 CFR 75.118. The Secretary may also require more frequent performance reports under 34 CFR 75.720(c). For specific requirements on reporting, please go to: *http://www.ed.gov/fund/grant/apply/appforms/appforms.html.*

2. *Performance Measures:* The Secretary has established the following key performance measures for assessing the effectiveness of the PBI Formula Grant Program:

(a) Enrollment Rate: The percentage change of the number of full-time degree-granting undergraduate students enrolled at PBIs.

(b) Persistence Rate-four-year schools: The percentage of first-time, full-time degree-seeking undergraduate students at four-year PBIs who were in their first year of postsecondary enrollment in the previous year and are enrolled in the current year at the same four-year PBI.

(c) Persistence Rate-two-year schools: The percentage of first-time, full-time degree-seeking undergraduate students

at two-year PBIs who were in their first year of postsecondary enrollment in the previous year and are enrolled in the current year at the same two-year PBI.

(d) Four-year Completion Rate: The percentage of first-time, full-time degree-seeking undergraduate students enrolled at four-year PBIs who graduate within six years of enrollment.

(e) Two-Year Completion Rate: The percentage of first-time, full-time degree-seeking undergraduate students enrolled at two-year PBIs who graduate within three years of enrollment.

(f) Efficiency Measure: Cost per successful program outcome: Federal cost per undergraduate degree at PBIs.

VII. Agency Contact

FOR FURTHER INFORMATION CONTACT: Sara Starke, Teacher and Student Development Programs Service, U.S. Department of Education, 1990 K Street, NW., room 6019, Washington, DC 20006–8524. *Telephone:* (202) 502–7688, or by *e-mail: sara.starke@ed.gov.*

If you use a TDD, call the FRS, toll free, at 1–800–877–8339.

VIII. Other Information

Accessible Format: Individuals with disabilities can obtain this document and a copy of the application package in an accessible format (*e.g.,* braille, large print, audiotape, or computer diskette) on request to the program contact person listed under **FOR FURTHER INFORMATION CONTACT** in section VII of this notice.

Electronic Access to This Document: You can view this document, as well as all other documents of this Department published in the **Federal Register**, in text or Adobe Portable Document Format (PDF) on the Internet at the following site: *http://www.ed.gov/news/fedregister.* To use PDF you must have Adobe Acrobat Reader, which is available free at this site.

Note: The official version of this document is the document published in the **Federal Register.** Free Internet access to the official edition of the **Federal Register** and the Code of Federal Regulations is available on GPO Access at: *http://www.gpoaccess.gov/nara/index.html.*

Delegation of Authority: The Secretary of Education has delegated authority to Daniel T. Madzelan, Director, Forecasting and Policy Analysis for the Office of Postsecondary Education, to perform the functions and duties of the Assistant Secretary for Postsecondary Education.

Dated: June 15, 2010.

Daniel T. Madzelan,

Director, Forecasting and Policy Analysis.

[FR Doc. 2010–14993 Filed 6–18–10; 8:45 am]

BILLING CODE 4000–01–P

DEPARTMENT OF EDUCATION

National Institute on Disability and Rehabilitation Research (NIDRR)—Disability and Rehabilitation Research Projects and Centers Program—Rehabilitation Research and Training Centers (RRTCs)—Employment Outcomes for Individuals Who Are Blind or Visually Impaired

AGENCY: Office of Special Education and Rehabilitative Services, Department of Education.

ACTION: Notice of final priority.

Catalog of Federal Domestic Assistance (CFDA) Number: 84.133B–6.

SUMMARY: The Assistant Secretary for Special Education and Rehabilitative Services announces a priority for the Disability and Rehabilitation Research Projects and Centers Program administered by NIDRR. Specifically, this notice announces a priority for an RRTC on Employment Outcomes for Individuals who are Blind or Visually Impaired. The Assistant Secretary may use this priority for competitions in fiscal year (FY) 2010 and later years. We take this action to focus research attention on areas of national need. We intend this priority to improve rehabilitation services and outcomes for individuals with disabilities.

DATES: *Effective Date:* This priority is effective July 21, 2010.

FOR FURTHER INFORMATION CONTACT: Marlene Spencer, U.S. Department of Education, 400 Maryland Avenue, SW., room 5133, Potomac Center Plaza (PCP), Washington, DC 20202–2700. *Telephone:* (202) 245–7532 or by *e-mail: Marlene.Spencer@ed.gov.*

If you use a telecommunications device for the deaf (TDD), call the Federal Relay Service (FRS), toll free, at 1–800–877–8339.

SUPPLEMENTARY INFORMATION: This notice of final priority is in concert with NIDRR's Final Long-Range Plan for FY 2005–2009 (Plan). The Plan, which was published in the **Federal Register** on February 15, 2006 (71 FR 8165), can be accessed on the Internet at the following site: *http://www.ed.gov/about/offices/list/osers/nidrr/policy.html.*

Through the implementation of the Plan, NIDRR seeks to: (1) Improve the quality and utility of disability and rehabilitation research; (2) foster an exchange of expertise, information, and training to facilitate the advancement of knowledge and understanding of the unique needs of traditionally underserved populations; (3) determine best strategies and programs to improve rehabilitation outcomes for underserved populations; (4) identify research gaps; (5) identify mechanisms of integrating research and practice; and (6) disseminate findings.

Purpose of Program: The purpose of the Disability and Rehabilitation Research Projects and Centers Program is to plan and conduct research, demonstration projects, training, and related activities, including international activities, to develop methods, procedures, and rehabilitation technology that maximize the full inclusion and integration into society, employment, independent living, family support, and economic and social self-sufficiency of individuals with disabilities, especially individuals with the most severe disabilities, and to improve the effectiveness of services authorized under the Rehabilitation Act of 1973, as amended.

RRTC Program

The purpose of the RRTC program is to improve the effectiveness of services authorized under the Rehabilitation Act of 1973, as amended, through advanced research, training, technical assistance, and dissemination activities in general problem areas, as specified by NIDRR. Such activities are designed to benefit rehabilitation service providers, individuals with disabilities, and the family members or other authorized representatives of individuals with disabilities. In addition, NIDRR intends to require all RRTC applicants to meet the requirements of the *General Rehabilitation Research and Training Centers (RRTC) Requirements* priority that it published in a notice of final priorities in the **Federal Register** on February 1, 2008 (73 FR 6132). Additional information on the RRTC program can be found at: *http://www.ed.gov/rschstat/research/pubs/res-program.html#RRTC.*

Statutory and Regulatory Requirements of RRTCs

RRTCs must—

- Carry out coordinated advanced programs of rehabilitation research;
- Provide training, including graduate, pre-service, and in-service training, to help rehabilitation personnel more effectively provide rehabilitation services to individuals with disabilities;
- Provide technical assistance to individuals with disabilities, their

representatives, providers, and other interested parties;

- Disseminate informational materials to individuals with disabilities, their representatives, providers, and other interested parties; and
- Serve as centers of national excellence in rehabilitation research for individuals with disabilities, their representatives, providers, and other interested parties.

Applicants for RRTC grants must also demonstrate in their applications how they will address, in whole or in part, the needs of individuals with disabilities from minority backgrounds.

Program Authority: 29 U.S.C. 762(g) and 764(b)(2).

Applicable Program Regulations: 34 CFR part 350.

We published a notice of proposed priority (NPP) for NIDRR's Disability and Rehabilitation Research Projects and Centers Program in the **Federal Register** on March 26, 2010 (75 FR 14585). That notice contained background information and our reasons for proposing the particular priority.

There are two differences between the NPP and this notice of final priority (NFP) as discussed in the following section.

Public Comment: In response to our invitation in the NPP, four parties submitted comments on the proposed priority. An analysis of the comments and of any changes in the priority since publication of the NPP follows.

Generally, we do not address technical and other minor changes or suggested changes the law does not authorize us to make under the applicable statutory authority. In addition, we do not address general comments that raised concerns not directly related to the proposed priority.

Analysis of Comments and Changes

Comment: One commenter proposed that the RRTC conduct research on, and provide training and technical assistance to, the Randolph-Sheppard program.

Discussion: Although the Randolph-Sheppard program is not explicitly mentioned in the priority, nothing would preclude applicants from conducting research on, or providing training and technical assistance to, individuals associated with that program. However, NIDRR does not have a sufficient basis for requiring all applicants to do so.

Changes: None.

Comment: One commenter noted that many current practices to improve employment outcomes for individuals who are blind or visually impaired are not widely known or easily identified. This commenter suggested that the Center should engage in survey data collection or interviews with rehabilitation providers to comprehensively identify ongoing practices and interventions for this population. The commenter noted that this comprehensive identification of current practices will serve as a resource to service providers, and provide a list of practices that can be evaluated. Therefore, this commenter suggested that NIDRR consider adding "identifying" to paragraph (a) of the priority as part of the process for "evaluating practices currently in use."

Discussion: NIDRR agrees that a comprehensive list of current practices or interventions that are designed to facilitate competitive employment outcomes for individuals who are blind or visually impaired may be useful to service providers and researchers. However, a comprehensive list of such practices and interventions is not a necessary step toward the development of evidence for particular practices or interventions. If applicants choose to conduct research that involves evaluating practices that are currently in use, they are free either to identify and justify such practices in their proposals or to specify a process by which they will identify these practices prior to evaluation. The peer review process will determine the merits of each proposal.

Changes: None.

Comment: One commenter asked whether this RRTC must use randomized control trials to evaluate the effectiveness of new interventions or practices on employment.

Discussion: The priority does not require that the RRTC employ randomized control trial research designs to evaluate the effectiveness of interventions or practices. NIDRR believes that randomized control trial research designs can be appropriate for research that involves evaluating specific interventions. However, in complex service delivery settings, other scientifically rigorous research designs may be more appropriate or feasible. Therefore, the choice of research design is left to the applicant. The peer review process will determine the merits of each proposal.

Changes: None.

Comment: One commenter asked whether NIDRR intends that evaluations of practices or interventions only include participants who are legally blind.

Discussion: For the purposes of this priority, NIDRR has defined the target population—individuals who are blind or visually impaired—as individuals who have "central visual acuity of 20/200 or less in the better eye with the use of a correcting lens. An eye which is accompanied by a limitation in the fields of vision such that the widest diameter of the visual field subtends an angle no greater than 20 degrees shall be considered for purposes of this paragraph as having a central visual acuity of 20/200 or less" (42 U.S.C. 416(i)(1)(B)); NIDRR includes this definition in the opening paragraph of this priority. Within the constraints of this definition, applicants have the flexibility to specify their target population for the purposes of their proposed projects.

Changes: None.

Comment: One commenter stated that research is needed to develop and evaluate new interventions and practices and to evaluate practices that are currently in use. This commenter suggested that research conducted under paragraphs (a) and (b) of the priority should include the development and evaluation of new interventions and practices as well as the evaluation of practices that are currently in use.

Discussion: The priority states that the RRTC must develop and evaluate new practices, or evaluate practices currently in use, or conduct both kinds of research. NIDRR does not require an applicant to conduct both types of research, because such a requirement may reduce the resources that are available to fulfill other requirements of the RRTC. NIDRR seeks to maintain flexibility to allow a range of viable options for generating new knowledge about practices or interventions that can help improve the employment outcomes of individuals with disabilities.

Changes: None.

Comment: One commenter stated that the RRTC should build upon research that demonstrates effective employment practices for other populations by modifying and evaluating those practices for individuals who are blind or visually impaired.

Discussion: Modifying and evaluating employment practices that have been found to be effective for other populations is one option for identifying interventions and practices for individuals who are blind or visually impaired, as required under paragraph (a) of the priority. However, NIDRR does not have a sufficient basis for requiring that all applicants take this approach. NIDRR does not wish to preclude applicants from using other viable methods or approaches for determining practices and interventions for further evaluation.

Changes: None.

Comment: One commenter noted that a large majority of young individuals who are blind or have low vision also have other potentially disabling conditions and that the RRTC should be required to conduct research on more than one at-risk subgroup under paragraph (b) of the priority.

Discussion: The priority requires applicants to propose research with at least one at-risk subgroup. Applicants are free to propose research with more than one at-risk group. However, given the limited resources of the RRTC, NIDRR does not want to require applicants to conduct research on more than one at-risk subgroup.

Changes: None.

Comment: One commenter suggested that the list of possible collaborators in paragraph (c) of the priority be modified to include nongovernmental or nonprofit organizations whose missions focus on improving social and vocational integration for people with visual impairments.

Discussion: NIDRR agrees that relevant nongovernmental or nonprofit organizations could be appropriate collaborators under paragraph (c) of the priority.

Changes: NIDRR has revised paragraph (c)(1) to add relevant nongovernmental or nonprofit organizations to the list of examples of potential collaborators.

Comment: One commenter suggested that the requirement for training and dissemination activities to facilitate the utilization of research findings in employment and vocational rehabilitation (VR) settings in paragraph (c)(2) of the priority be amended to include conducting such activities to facilitate the use of research findings in educational settings.

Discussion: NIDRR agrees that knowledge of practices that increase competitive employment for individuals who are blind or visually impaired would be beneficial in educational settings.

Changes: NIDRR has amended paragraph (c)(2) of the priority to specify educational settings as a setting for training and dissemination efforts.

Comment: One commenter suggested that the priority require a significant portion of dissemination activities to be conducted via the Internet and be made available without charge.

Discussion: Disseminating information via the Internet is one option for fulfilling the dissemination requirement of this priority. However, NIDRR does not believe it is appropriate to require that all applicants engage in or prioritize disseminating information via the Internet. While NIDRR encourages applicants to use dissemination strategies that are accessible and that reach large numbers of individuals, NIDRR does not want to preclude applicants from using other viable methods or approaches to disseminate the results of their research. Therefore, the choice of dissemination strategy is left to the applicant. The peer review process will determine the merits of each proposal.

Changes: None.

Comment: One commenter suggested that the priority require research on the extent to which technology availability, accessibility, and usability have an impact on employment outcomes for individuals who are blind or visually impaired.

Discussion: Nothing in the priority precludes applicants from proposing to conduct research on the effects of technology on employment outcomes for this population. However, NIDRR does not require all applicants to focus on this factor because we do not want to preclude applicants from proposing research on other promising practices and interventions. The choice of practices or interventions to be evaluated under paragraphs (a) and (b) of the priority is left to the applicant. The peer review process will determine the merits of each proposal.

Changes: None.

Comment: One commenter suggested that NIDRR expand the focus of the priority to include not only research on employment outcomes but also outcomes related to economic self-sufficiency.

Discussion: Nothing in the priority precludes an applicant from investigating the effects of practices or interventions on economic self-sufficiency, in addition to their effects on competitive employment outcomes. However, NIDRR does not have a sufficient basis for requiring all applicants to do so. Given the limited resources for research in this area, NIDRR does not want to preclude applicants from proposing research topics and methods that focus specifically on promoting employment outcomes for the target population.

Changes: None.

Comment: One commenter suggested inserting "self-employment" outcomes wherever competitive employment outcomes are mentioned in the priority.

Discussion: The focus of this priority is on competitive employment outcomes. Nothing in the priority precludes an applicant from proposing that employment outcomes include self-employment. However, NIDRR does not have a sufficient basis for requiring all applicants to do so.

Changes: None.

Comment: One commenter suggested that the goal of paragraph (c) of the priority be expanded beyond increased incorporation of research findings into practice and policy to include an exploration of policy and system changes related to section 14c of the Fair Labor Standards Act and the Javits-Wagner-O'Day Act (JWOD).

Discussion: It is not the intent of paragraph (c) of this priority to specify research related to specific policies or statutory requirements. Applicants may wish to propose such research or evaluation activities under paragraphs (a) and (b) of the priority, if applicable.

Changes: None.

Final Priority

The Assistant Secretary for Special Education and Rehabilitative Services announces a priority for a Rehabilitation Research and Training Center (RRTC) on Employment Outcomes for Individuals Who are Blind or Visually Impaired. This RRTC must conduct research that contributes to improving competitive employment outcomes for individuals who are blind or visually impaired, consistent with the individual's informed choice and abilities (*see* section 100(a)(2)(B) of title I of the Rehabilitation Act of 1973, as amended). For the purposes of this priority, this population is defined as individuals who have "central visual acuity of 20/200 or less in the better eye with the use of a correcting lens. An eye which is accompanied by a limitation in the fields of vision such that the widest diameter of the visual field subtends an angle no greater than 20 degrees shall be considered for purposes of this paragraph as having a central visual acuity of 20/200 or less" (42 U.S.C. 416(i)(1)(B)). Under this priority, the RRTC must contribute to the following outcomes:

(a) Evidence-based interventions and practices designed to facilitate competitive employment outcomes for individuals who are blind or visually impaired. The RRTC must contribute to this outcome by developing and evaluating new interventions and practices, evaluating practices currently in use, or by conducting both of these types of research.

(b) New knowledge about employment interventions and practices for individuals who are blind or visually impaired, and who are also at greater risk for poor employment outcomes due to other individual characteristics (*e.g.,* individuals with more severe vision loss or individuals with multiple disabilities). The RRTC must contribute to this outcome by conducting research

with at least one at-risk group (as described earlier in this paragraph) to: Develop and evaluate new interventions or practices, evaluate practices currently being used with members of the at-risk group, or by conducting both of these types of research. Applicants must identify the specific at-risk group or groups they propose to study, provide evidence that the selected population or populations are, in fact, at greater risk for poor employment outcomes, and explain how the proposed interventions and practices are expected to address the needs of the population or populations.

(c) Increased incorporation of research findings into practice and policy. The RRTC must contribute to this outcome by:

(1) Collaborating with providers of vocational rehabilitation (VR) services, employer groups, and stakeholders (*e.g.,* individuals who are blind or visually impaired, consumer groups, or relevant nongovernmental or nonprofit organizations) in conducting the work of the RRTC; and

(2) Conducting training and dissemination activities to facilitate the utilization of research findings in employment, educational, and VR settings.

(d) In addition, through coordination with the NIDRR Project Officer, this RRTC must collaborate with:

(1) Appropriate NIDRR-funded grantees, including knowledge translation grantees; and

(2) Relevant Office of Special Education Programs and Rehabilitation Services Administration grantees.

Types of Priorities

When inviting applications for a competition using one or more priorities, we designate the type of each priority as absolute, competitive preference, or invitational through a notice in the **Federal Register.** The effect of each type of priority follows:

Absolute priority: Under an absolute priority, we consider only applications that meet the priority (34 CFR 75.105(c)(3)).

Competitive preference priority: Under a competitive preference priority, we give competitive preference to an application by (1) awarding additional points, depending on the extent to which the application meets the priority (34 CFR 75.105(c)(2)(i)); or (2) selecting an application that meets the priority over an application of comparable merit that does not meet the priority (34 CFR 75.105(c)(2)(ii)).

Invitational priority: Under an invitational priority, we are particularly interested in applications that meet the priority. However, we do not give an application that meets the priority a preference over other applications (34 CFR 75.105(c)(1)).

This notice does not preclude us from proposing additional priorities, requirements, definitions, or selection criteria, subject to meeting applicable rulemaking requirements.

Note: This notice does *not* solicit applications. In any year in which we choose to use this priority, we invite applications through a notice in the **Federal Register.**

Executive Order 12866: This notice has been reviewed in accordance with Executive Order 12866. Under the terms of the order, we have assessed the potential costs and benefits of this final regulatory action.

The potential costs associated with this final regulatory action are those resulting from statutory requirements and those we have determined as necessary for administering this program effectively and efficiently.

In assessing the potential costs and benefits—both quantitative and qualitative—of this final regulatory action, we have determined that the benefits of the final priority justify the costs.

Discussion of Costs and Benefits

The benefits of the Disability and Rehabilitation Research Projects and Centers Program have been well established over the years in that similar projects have been completed successfully. This final priority will generate new knowledge and technologies through research, development, dissemination, utilization, and technical assistance projects.

Another benefit of this final priority is that the establishment of a new RRTC will support and will improve the lives of individuals with disabilities. The new RRTC will generate, disseminate, and promote the use of new information that will improve the options for individuals with disabilities to obtain, retain, and advance in employment.

Accessible Format: Individuals with disabilities can obtain this document in an accessible format (*e.g.,* braille, large print, audiotape, or computer diskette) by contacting the Grants and Contracts Services Team, U.S. Department of Education, 400 Maryland Avenue, SW., Room 5075, PCP, Washington, DC 20202–2550. Telephone: (202) 245–7363. If you use a TDD, call the FRS, toll free, at 1–800–877–8339.

Electronic Access to This Document: You can view this document, as well as all other documents of this Department published in the **Federal Register**, in text or Adobe Portable Document Format (PDF) on the Internet at the following site: *http://www.ed.gov/news/fedregister.* To use PDF you must have Adobe Acrobat Reader, which is available free at this site.

Note: The official version of this document is the document published in the **Federal Register**. Free Internet access to the official edition of the **Federal Register** and the Code of Federal Regulations is available on GPO Access at: *http://www.gpoaccess.gov/nara/index.html.*

Dated: June 10, 2010.

Alexa Posny,

Assistant Secretary for Special Education and Rehabilitative Services.

[FR Doc. 2010–14987 Filed 6–18–10; 8:45 am]

BILLING CODE 4000–01–P

DEPARTMENT OF ENERGY

Blue Ribbon Commission on America's Nuclear Future, Disposal Subcommittee

AGENCY: Department of Energy, Office of Nuclear Energy.

ACTION: Notice of Open Meeting.

SUMMARY: This notice announces an open meeting of the Disposal Subcommittee. The Disposal Subcommittee is a subcommittee of the Blue Ribbon Commission on America's Nuclear Future (the Commission). The establishment of subcommittees is authorized in the Commission's charter. The Commission was organized pursuant to the Federal Advisory Committee Act (Pub. L. 92–463, 86 Stat. 770) (the Act). This notice is provided in accordance with the Act.

DATES: Wednesday, July 7, 2010 8 a.m.–3:45 p.m.

ADDRESSES: Washington Marriott at Metro Center, 775 12th Street, NW., Washington, DC 20005, Phone: 202–737–2200.

FOR FURTHER INFORMATION CONTACT: Timothy A. Frazier, Designated Federal Officer, U.S. Department of Energy, 1000 Independence Avenue, SW., Washington, DC 20585; telephone (202) 586–4243 or facsimile (202) 586–0544; e-mail *CommissionDFO@nuclear.energy.gov.* Additional information may also be available at *http://www.brc.gov.*

SUPPLEMENTARY INFORMATION:

Background: The President directed that the Blue Ribbon Commission on America's Nuclear Future (the Commission) be established to conduct a comprehensive review of policies for managing the back end of the nuclear fuel cycle. The Commission will provide advice and make

recommendations on issues including alternatives for the storage, processing, and disposal of civilian and defense spent nuclear fuel and nuclear waste.

The Co-chairs of the Commission requested the Disposal Subcommittee to answer the question: "[h]ow can the U.S. go about establishing one or more disposal sites for high-level nuclear wastes in a manner that is technically, politically and socially acceptable?"

Purpose of the Meeting: The meeting will provide the Disposal Subcommittee with valuable perspectives and experiences of a broad range of interested and affected parties related to the disposal of spent nuclear fuel and high-level waste.

Tentative Agenda: The meeting is expected to start at 8 a.m. on July 7 with the presentations from invited parties and end at 3:45 p.m.

Public Participation: Subcommittee meetings are not subject to the requirements of the Act; however, the Commission has elected to open the presentation session of the meeting to the public. This meeting is open to the public. Individuals and representatives of organizations who would like to offer comments and suggestions may do so at the end of the meeting on Wednesday, July 7, 2010. Approximately 45 minutes will be reserved for public comments. Time allotted per speaker will depend on the number who wish to speak but will not exceed 5 minutes. The Designated Federal Officer is empowered to conduct the meeting in a fashion that will facilitate the orderly conduct of business. Those wishing to speak should register to do so beginning at 7:30 a.m. on July 7, 2010.

Those not able to attend the meeting or have insufficient time to address the subcommittee are invited to send a written statement to Timothy A. Frazier, U.S. Department of Energy, 1000 Independence Avenue, SW., Washington DC 20585, e-mail to *CommissionDFO@nuclear.energy.gov,* or post comments on the Commission website at *http://www.brc.gov.*

Additionally, the meeting will be available via live audio webcast. The link will be available at *http://www.brc.gov.*

Minutes: The minutes of the meeting will be available at *http://www.brc.gov* or by contacting Mr. Frazier. He may be reached at the postal address or e-mail address above.

Issued in Washington, DC, on June 15, 2010.

Rachel Samuel,

Deputy Committee Management Officer.

[FR Doc. 2010–14887 Filed 6–18–10; 8:45 am]

BILLING CODE 6450–01–P

DEPARTMENT OF ENERGY

Blue Ribbon Commission on America's Nuclear Future, Reactor and Fuel Cycle Technologies Subcommittee

AGENCY: Department of Energy, Office of Nuclear Energy.

ACTION: Notice of Open Meeting.

SUMMARY: This notice announces an open meeting of the Reactor and Fuel Cycle Technologies (RFCT) Subcommittee. The RFCT Subcommittee is a subcommittee of the Blue Ribbon Commission on America's Nuclear Future (the Commission). The establishment of subcommittees is authorized in the Commission's charter. The Commission was organized pursuant to the Federal Advisory Committee Act (Public Law No. 94–463, 86 Stat. 770) (the Act). This notice is provided in accordance with the Act.

DATES: Monday, July 13, 2010, 8:30 a.m.–5 p.m.

ADDRESSES: Shilo Inn Suites Hotel, 780 Lindsay Boulevard, Idaho Falls, ID 83402, Phone (208) 523–0088.

FOR FURTHER INFORMATION CONTACT: Timothy A. Frazier, Designated Federal Officer, U.S. Department of Energy, 1000 Independence Avenue, SW., Washington, DC 20585; telephone (202) 586–4243 or facsimile (202) 586–0544; e-mail *CommissionDFO@nuclear.energy.gov*. Additional information may also be available at *http://www.brc.gov*.

SUPPLEMENTARY INFORMATION:

Background: The President directed that the Blue Ribbon Commission on America's Nuclear Future (the Commission) be established to conduct a comprehensive review of policies for managing the back end of the nuclear fuel cycle. The Commission will provide advice and make recommendations on issues including alternatives for the storage, processing, and disposal of civilian and defense spent nuclear fuel and nuclear waste.

The Co-chairs of the Commission requested the formation of the RFCT Subcommittee to answer the question: "[d]o technical alternatives to today's once-through fuel cycle offer sufficient promise to warrant serious consideration and R&D investment, and do these technologies hold significant potential to influence the way in which used fuel is stored and disposed?"

Purpose of the Meeting: The meeting will primarily focus on the United States research and development (R&D) capabilities and activities in reactor and fuel cycle technologies.

Tentative Agenda: The meeting is expected to start at 8:30 a.m. on July 12 with the presentations regarding the Department of Energy's Office of Nuclear Energy's R&D activities and end at 5 p.m.

Public Participation: Subcommittee meetings are not subject to the requirements of the Act; however, the Commission has elected to open the presentation sessions of the meeting to the public. The meeting is open to the public. Individuals and representatives of organizations who would like to offer comments and suggestions may do so at the end of the meeting on Monday, July 12, 2010. Approximately 45 minutes will be reserved for public comments. Time allotted per speaker will depend on the number who wish to speak but will not exceed 5 minutes. The Designated Federal Officer is empowered to conduct the meeting in a fashion that will facilitate the orderly conduct of business. Those wishing to speak should register to do so beginning at 8 a.m. on July 12, 2010.

Those not able to attend the meeting or have insufficient time to address the subcommittee are invited to send a written statement to Timothy A. Frazier, U.S. Department of Energy, 1000 Independence Avenue, SW., Washington DC 20585, e-mail to *CommissionDFO@nuclear.energy.gov*, or post comments on the Commission website at *http://www.brc.gov*.

Additionally, the meeting will be available via live audio webcast. The link will be available at *http://www.brc.gov*.

Minutes: The minutes of the meeting will be available at *http://www.brc.gov* or by contacting Mr. Frazier. He may be reached at the postal address or e-mail address above.

Issued in Washington, DC, on June 15, 2010.

Rachel Samuel,

Deputy Committee Management Officer.

[FR Doc. 2010–14888 Filed 6–18–10; 8:45 am]

BILLING CODE 6450–01–P

DEPARTMENT OF ENERGY

Federal Energy Regulatory Commission

[Docket No. IC10–725E–000]

Commission Information Collection Activities (FERC–FERC–725E); Comment Request; Extension

June 15, 2010.

AGENCY: Federal Energy Regulatory Commission, Energy.

ACTION: Notice of proposed information collection and request for comments.

SUMMARY: In compliance with the requirements of section 3506(c)(2)(A) of the Paperwork Reduction Act of 1995, 44 U.S.C. 3506(c)(2)(A) (2006), (Pub. L. No. 104–13), the Federal Energy Regulatory Commission (Commission or FERC) is soliciting public comment on the proposed information collection described below.

DATES: Comments in consideration of the collection of information are due 60 days after publication of this Notice in the **Federal Register**.

ADDRESSES: Comments may be filed either electronically (eFiled) or in paper format, and should refer to Docket No. IC10–725E–000. Documents must be prepared in an acceptable filing format and in compliance with Commission submission guidelines at *http://www.ferc.gov/help/submission-guide.asp.* eFiling instructions are available at: *http://www.ferc.gov/docs-filing/efiling.asp.* First time users must follow eRegister instructions at: *http://www.ferc.gov/docs-filing/eregistration.asp,* to establish a user name and password before eFiling. The Commission will send an automatic acknowledgement to the sender's e-mail address upon receipt of eFiled comments. Commenters making an eFiling should not make a paper filing. Commenters that are not able to file electronically must send an original and two (2) paper copies of their comments to: Federal Energy Regulatory Commission, Secretary of the Commission, 888 First Street, NE., Washington, DC 20426.

Users interested in receiving automatic notification of activity in this docket may do so through eSubscription at *http://www.ferc.gov/docs-filing/esubscription.asp.* In addition, all comments and FERC issuances may be viewed, printed or downloaded remotely through FERC's eLibrary at *http://www.ferc.gov/docs-filing/elibrary.asp,* by searching on Docket No. IC10–725E–000. For user assistance, contact FERC Online Support by e-mail at *ferconlinesupport@ferc.gov,* or by phone at: (866) 208–3676 (toll-free) or (202) 502–8659 for TTY.

FOR FURTHER INFORMATION CONTACT: Michael Miller may be reached by e-mail at *DataClearance@FERC.gov*, telephone at (202) 502–8415, and fax at (202) 273–0873.

SUPPLEMENTARY INFORMATION: The information collected by the FERC–725E (OMB Control No. 1902–0246) is required to implement the statutory provisions of section 215 of the Federal Power Act (FPA) (16 U.S.C. 824o). Section 215 of the FPA buttresses the Commission's efforts to strengthen the reliability of the interstate grid through the grant of new authority by providing for a system of mandatory Reliability Standards developed by the Electric Reliability Organization. Reliability Standards that the ERO proposes to the Commission may include Reliability Standards that are proposed to the ERO by a Regional Entity.[1] A Regional Entity is an entity that has been approved by the Commission to enforce Reliability Standards under delegated authority from the ERO.[2] On June 8, 2008 in an adjudicatory order, the Commission approved eight regional Reliability Standards submitted by the ERO that were proposed by the Western Electricity Coordinating Council (WECC).[3]

WECC is responsible for coordinating and promoting electric system reliability. In addition to promoting a reliable electric power system in the Western Interconnection, WECC supports efficient competitive power markets, ensures open and non-discriminatory transmission access among members, and provides a forum for resolving transmission access disputes plus the coordination of operating and planning activities of its members. WECC and the eight other regional reliability councils were formed due to national concern regarding the reliability of the interconnected bulk power systems, the ability to operate these systems without widespread failures in electric service and the need to foster the preservation of reliability through a formal organization. The eight regional Reliability Standards are translations of existing reliability criteria and are now binding on the applicable subset of users, owners and operators of the Bulk Power System in the United States portion of the Western Interconnection. The Commission's reporting requirements are found in 18 CFR Part 40.

The eight proposed Reliability Standards do not require responsible entities to file information with the Commission. However, the standards do require responsible entities to file periodic reports with WECC and to develop and maintain certain information for a specified period of time, subject to inspection by WECC. WECC–BAL–STD–002–0 requires balancing authorities and reserve sharing groups to submit to WECC quarterly reports on operating reserves as well as reports after any instance of non-compliance. WECC–IRO–STD–006–0 requires transmission operators, balancing authorities and load-serving entities to document and report to WECC actions taken in response to direction to mitigate unscheduled flow. The standard also requires transmission operators to document required actions that are and are not taken by responsible entities. WECC–PRC–STD–001–1 requires certain transmission operators to submit to WECC annual certifications of protective equipment. WECC–PRC–STD–003–1 requires certain transmission operators to report to WECC any misoperation of relays and remedial action schemes. WECC–PRC–STD–005–1 requires certain transmission operators to maintain, in stated form, maintenance and inspection records pertaining to their transmission facilities. The standard also requires operators to certify to WECC that the operator is maintaining the required records. WECC–TOP–STD–007–0 requires certain transmission operators to submit to WECC quarterly reports on transfer capability data and compliance as well as reports after an instance of non-compliance. WECC–VAR–STD–002a–1 and WECC–VAR–STD–002b–1 require certain generators to submit quarterly reports to WECC on automatic voltage control and power system stabilizers. All of the foregoing regional Reliability Standards require the reporting entity to retain relevant data in electronic form for one year or for a longer period if the data is relevant to a dispute or potential penalty, except that WECC–PRC–STD–005–1 requires retention of maintenance and inspection records for five years and retention of other data for four years.

The Commission uses the data to participate in North American Electric Reliability Council's (NERC's) Reliability readiness reviews of balancing authorities, transmission operators and reliability coordinators in North America to determine their readiness to maintain safe and reliable operations. In addition, FERC's Office of Electric Reliability uses the data to engage in studies and other activities to assess the longer-term and strategic needs and issues related to power grid reliability.

Action: The Commission is requesting a three-year extension of the FERC–725E reporting requirements, with no changes.

Burden Statement: The estimated annual burden follows.

[1] 16 U.S.C. 824o(e)(4).

[2] 16 U.S.C. 824o(a)(7) and (e)(4).

[3] 72 FR 33462, June 18, 2007.

FERC Data collection	Number of respondents (1)	Average number of reponses per respondent (2)	Average burden hours per response (3)	Total burden hours (1) x (2) x (3)
FERC–725E Reporting:				
Balancing Authorities	32	1	20	640
Generator Operators	196	1	10	1960
Load-Serving Entities	140	1	10	1490
Transmission Operators/Owners	83	1–7 each (total of 83)	40	3320
Record-keeping		Balancing Authorities		64
		Generator Operators		196
		Load-Serving Entities		140
		Transmission Owners/Operators		332
		Totals		732

7,410 Total Annual hours for the Information Collection: 7,410 reporting hours + 732 recordkeeping = 8,142 hours.

The Commission is seeking comments on the costs to comply with these requirements. It has projected the average annualized cost to be $918,480 as shown below:

Reporting = 7,410 hours @ $120/hour = $889,200, Recordkeeping = 732 hours @ $40/hour = $29,280

Total Costs = Reporting ($889,200) + Recordkeeping ($29,280) = $918,480

The reporting burden includes the total time, effort, or financial resources expended to generate, maintain, retain, disclose, or provide the information including: (1) Reviewing instructions; (2) developing, acquiring, installing, and utilizing technology and systems for the purposes of collecting, validating, verifying, processing, maintaining, disclosing and providing information; (3) adjusting the existing ways to comply with any previously applicable instructions and requirements; (4) training personnel to respond to a collection of information; (5) searching data sources; (6) completing and reviewing the collection of information; and (7) transmitting, or otherwise disclosing the information.

The estimate of cost for respondents is based upon salaries for professional and clerical support, as well as direct and indirect overhead costs. Direct costs include all costs directly attributable to providing this information, such as administrative costs and the cost for information technology. Indirect or overhead costs are costs incurred by an organization in support of its mission. These costs apply to activities which benefit the whole organization rather than any one particular function or activity.

Comments are invited on: (1) Whether the proposed collection of information is necessary for the proper performance of the functions of the Commission, including whether the information will have practical utility; (2) the accuracy of the agency's estimate of the burden of the proposed collection of information, including the validity of the methodology and assumptions used; (3) ways to enhance the quality, utility and clarity of the information to be collected; and (4) ways to minimize the burden of the collection of information on those who are to respond, including the use of appropriate automated, electronic, mechanical, or other technological collection techniques or other forms of information technology, *e.g.* permitting electronic submission of responses.

Kimberly D. Bose,

Secretary.

[FR Doc. 2010–14956 Filed 6–18–10; 8:45 am]

BILLING CODE 6717–01–P

DEPARTMENT OF ENERGY

Federal Energy Regulatory Commission

[Docket Nos. IC10–580–001]

Commission Information Collection Activities (FERC Form No. 580); Request; Submitted for OMB Review June 15, 2010.

AGENCY: Federal Energy Regulatory Commission.

ACTION: Notice.

SUMMARY: In compliance with the requirements of section 3507 of the Paperwork Reduction Act of 1995, 44 U.S.C. 3507, the Federal Energy Regulatory Commission (Commission or FERC) has submitted the information collections described below to the Office of Management and Budget (OMB) for review of the information collection requirements. Any interested person may file comments directly with OMB and should address a copy of those comments to the Commission as explained below. The Commission issued a Notice in the **Federal Register** (74 FR 66114, 12/14/2009) requesting public comments. FERC received comments from Edison Electric Institute (EEI), American Electric Power Company (AEP), MidAmerican Energy Company (MidAmerican) and Pacific Gas and Electric Company (PG&E) and has made this notation in its submission to OMB.

DATES: Comments on the collections of information are due by July 21, 2010.

ADDRESSES: Address comments on the collections of information to the Office of Management and Budget, Office of Information and Regulatory Affairs, Attention: Federal Energy Regulatory Commission Desk Officer. Comments to OMB should be filed electronically, c/o *oira__submission@omb.eop.gov* and include the appropriate OMB Control Number(s) and collection number(s) as a point of reference. The Desk Officer may be reached by telephone at 202–395–4638.

A copy of the comments should also be sent to the Federal Energy Regulatory Commission and should refer to Docket No. IC10–580–001. Comments may be filed either electronically or in paper format. Those persons filing electronically do not need to make a paper filing. Documents filed electronically via the Internet must be prepared in an acceptable filing format and in compliance with the Federal Energy Regulatory Commission submission guidelines. Complete filing instructions and acceptable filing formats are available at *http://www.ferc.gov/help/submission-guide/electronic-media.asp.* To file the document electronically, access the Commission's Web site and click on Documents & Filing, E-Filing (*http://www.ferc.gov/docs-filing/efiling.asp*),

and then follow the instructions for each screen. First time users will have to establish a user name and password. The Commission will send an automatic acknowledgement to the sender's e-mail address upon receipt of comments.

For paper filings, the comments should be submitted to the Federal Energy Regulatory Commission, Secretary of the Commission, 888 First Street, NE., Washington, DC 20426, and should refer to Docket Nos. IC10–580–001.

All comments may be viewed, printed or downloaded remotely via the Internet through FERC's homepage using the "eLibrary" link. For user assistance, contact *ferconlinesupport@ferc.gov,* or call toll-free at (866) 208–3676, or for TTY, contact (202) 502–8659.

FOR FURTHER INFORMATION CONTACT: Michael Miller may be reached by telephone at (202) 502–8415, by fax at (202) 273–0873, and by e-mail at *DataClearance@FERC.gov.*

SUPPLEMENTARY INFORMATION: For the purpose of publishing this notice and seeking public comment, FERC requests comments on the following information collections: FERC Form No. 580 "Interrogatory on Fuel and Energy Purchase Practices Pursuant to Section 205(f)(2) of the Federal Power Act", OMB Control No. 1902–0137.

The Public Utility Regulatory Policies Act (PURPA), enacted November 8, 1978, amended the Federal Power Act (the Act) and directed the Commission to make comprehensive biennial reviews of certain matters related to automatic adjustment clauses in wholesale rate schedules used by public utilities subject to the Commission's jurisdiction. Specifically, the Commission is required to examine whether the clauses effectively provide the incentives for efficient use of resources and also whether the clauses reflect only those costs that are either "subject to periodic fluctuations" or "not susceptible to precise determinations" in rate cases prior to the time the costs are incurred. The Commission is also required to review the practices of each public utility under automatic adjustment clauses "to insure efficient use of resources under such clauses." [1] In response to the PURPA directive, the Commission (in Docket No. IN79–6) established an investigation and began in 1982, to collect every other year, the FERC Form No. 580 "Interrogatory on Fuel and Energy Purchase Practices."

Public Comments and FERC Responses. A summary of the comments on the major issues filed by the public on the FERC Form No. 580 reporting requirements and FERC's response, including proposed changes to the requirements is provided below. For a more detailed explanation please see the Commission's submission at *http://www.reginfo.gov/public/do/PRAMain,* scroll to "Currently under Review", key in "Federal Energy Regulatory Commission" and scroll to 1902–0137, "Interrogatory on Fuel and Energy Purchase Practices Pursuant to Section 205(f)(2) of the Federal Power Act", (FERC–580).

Public Disclosure

Fuel and Purchase Policies and Procedures (Question No. 5): Commenters stated the information requested in response to this question should be treated as privileged. If the information is released, potential fuel sellers would be given a road map to a purchaser's buying policies and practices. This public disclosure of bidding and bid evaluation practices could facilitate gaming by potential suppliers. In addition, this disclosure would subject the utility to a greater risk of litigation from fuel suppliers.

FERC Response: The Commission has developed an addendum which sets forth a duplicate question 5 which may be filed as privileged, if the filer should choose to do so. The Commission has also added additional instructions to question 5 for those respondents who choose to label as privileged their response(s) to question 5. (For sub questions within question 5, please see item no. 8 of the FERC submission).

Contract Shortfalls, Buy-downs and Buy-outs (Questions 7 & 8): Commenters indicated that the information requested in these two questions is commercially sensitive if reported when they are identified, instead of when these activities are later settled. If this information is made publicly available, at the earlier identification stage, disclosure of such information would impair a company's bargaining power.

FERC Response: The Commission has reworded the question to request information on shortfalls, buy-downs and buy-outs for aged cases only. Respondents need not submit information for cases that are involved in ongoing litigation.

Prior Submissions

Submission of Previously Filed Information: One commenter requested that the Commission acknowledge data filed in 2008 in the format requested by the Commission for that submission.

FERC Response: The Commission will not enter previously filed data into the new form for two reasons: (1) A significant portion of the data filed two years ago was not entered into the preferred Excel format properly. Some filers did not even use the form and many filers that did, did not properly identify each contract's fuel cost with its corresponding delivery information. The required use of the new electronic format will eliminate these issues; (2) the new Adobe PDF platform is not compatable with the previously preferred Excel platform therefore the data cannot be flowed from one format to the other.

The Commission will however, provide the data filed in 2010 for 2012 filers in the appropriate electronic format thus requiring filers to update information previously filed and eliminating the burden of subsequently entering data that doesn't change from year to year.

Reporting Burden: Several commenters have challenged the Commission's burden estimates and indicated that several questions in particular are burdensome in their preparation.

FERC Response: The Commission is eliminating the requirement to file question 6 information for contracts of one year or less and the question 5 requirement to attach copies of utility fuel procurement policies and practices and related studies. In addition, the Commission has increased its burden figures for the 2010 collection to incorporate an added 450 hours of burden to cover training, initial data entry, understanding of the new electronic filing software, etc., which increased the total burden to 4,150 hours. The total burden will revert back to 3,600 hours for the 2012 collection.

Public Comments That Were Not Incorporated and the FERC Responses

AAC

AAC Definition: EEI challenges the Commission's interpretation of what clauses should be considered "automatic adjustment clauses." Section 205(f)(4) defines "automatic adjustment clauses" as "a provision of a rate schedule which provides for increases or decreases (or both), without prior hearing, in rates reflecting increases or decreases (or both) in costs incurred by an electric utility." It goes on to exclude "any rate which takes effect subject to refund and subject to a later determination of the appropriate amount of such rate." Based on this latter exclusion, EEI argues that formula rate tariffs and agreements that are subject to public true-up proceedings and/or refund should not be included within the scope of Form

[1] The review requirement is set forth in two paragraphs of Section 208 of PURPA, 49 Stat. 851; 16 U.S.C. 824d.

580. As such, EEI asserts a simple pass-through component, which does not include a pre-established rate, should not be considered an AAC under the proposed changes.

FERC Response: The Commission disagrees with EEI's reading of Section 205(f)(4). Form 580 is an information collection, issued to support the preparation of the review called for by section 205(f) of the FPA.[2] That section requires the Commission, at least every *two* years, to "review, with respect to each public utility, practices under any automatic adjustment clauses of such utility to insure efficient use of resources (including economical purchase and use of fuel and electric energy) under such clauses."[3]

Many rate schedules contain provisions for adjustments to rates based on changes in one or more elements of the cost incurred to provide the service, the adjustments being calculated using procedures that have had prior regulatory approval. Where such adjustments in charges are permitted to occur automatically, without specific regulatory review of each adjustment, the rate schedule provisions are referred to as "automatic adjustment clauses." Many of the wholesale electric rate schedules filed with the Commission by public utilities contain provisions for automatic adjustment of rates. Current Commission policy permits acceptance of these types of energy cost rates, as well as comprehensive cost-of-service formula rates. These operate to adjust rates automatically. The effect of the clause may be reflected in rates charged by the utility without notification to or filing with the Commission. These types of automatic adjustment clauses correspond to the definition of AAC in PURPA. What was not included in this definition were so-called "periodic review-of-rate clauses," where the Commission has routinely required filing of changes in rates pursuant to implementation of a review-of-rate clause.

The definition of an automatic adjustment clause incorporated in the Form 580—"a provision of a rate schedule which provides for increases or decreases (or both), *without prior hearing,* in rates reflecting increases or decreases (or both) in costs incurred"—which EEI complains of, *see* EEI comments at 5, is consistent with the longstanding understanding of Congress' intent. The fact that a rate may be subject to an after-the-fact public true-up proceeding and/or later refund is a rate that is not subject to prior hearing; a rate that adjusts only subject to after-the-fact review, and not prior review, is thus a rate that can and should be legitimately considered an automatic adjustment clause.

In any event, even if EEI were correct in its interpretation of the definition of *automatic adjustment clause,* the Commission's authority to collect information on such rates is not limited by section 205(f). Section 304 of the FPA[4] provides that "every public utility shall file with the Commission such annual and other periodic or special reports as the Commission may by rules and regulations or order prescribe as necessary or appropriate to assist the Commission in the proper administration of this Act." That section goes on to provide that the Commission may "require from such persons specific answers to all questions upon which the Commission may need information." Similarly, section 307 of the FPA[5] provides for investigation of "any facts, conditions, practices, or matters which [the Commission] may find necessary or appropriate."[6] Thus, even if EEI's claim as to the definition of automatic adjustment clause were valid, the Commission may still seek the information it deems necessary to meet its requirements under the statute.

Basic AAC Identification (Question No. 2): Commenters requested that the Commission change the wording of the question to make clear that information regarding only AACs active during the reporting period are the subject of the question. In addition, the revised form should not cover non-power tariffs or agreements such as transmission tariffs as it would be discriminatory to require transmission owners that own steam generation to report on their non-power tariffs while not requiring competing transmission owners that do not own steam generation over 50MW to do so.

FERC Response: Question 2 reads: "(a) Provide the following information regarding the AACs your utility had on file with the Commission during calendar years 2008 and 2009 and (b) If any of the Utility's wholesale rate and/or service agreements containing an AAC, that was used during 2008 and/or 2009, was filed with the Commission before January 1, 1990, and attach an electronic copy of it with this filing."

The Commission is not changing the wording of these two questions because the question clearly states the AAC must have been active during 2008 and/or 2009 for the requirement to be applicable. However, a note will be added for this question in the Desk Reference to reiterate that only tariffs active during the reporting period are the subject of the question.

Confidential Treatment of Information (Question 6): EEI believes that fuel costs should be treated as privileged information. Specifically, delivered fuel characteristics, including the quantity may be competitively sensitive, particularly when reporting at the facility level. EEI also believes that information in response to question no. 6 should be limited to the cost of fuels that are passed through an Automatic Adjustment Clause (AAC). Further, question no. 6 should only ask for data on the cost of primary fuels, not the costs from incidental use or other fuels for auxiliary or start-up purposes.

FERC Response: While the Commission understands the desire of some of the respondents to treat the cost data in the Form 580 as privileged information, it is necessary that this data continue to be publicly reported for two reasons. First, the Commission and other government agencies need this data to carry out their statutory responsibilities (*e.g.,* to ensure that the rates are just and reasonable and customers are protected from undue discrimination). Second, ratepayers need this information to evaluate whether the rates they are being charged are just and reasonable and not unduly discriminatory or preferential.

The delivered fuel characteristics and quantities have been historically treated as public by both FERC and EIA at the plant level. EEI's comments are not sufficient to persuade the Commission to change its historic practice.

Duplicative Reporting: Commenters stated that the Commission should not require reporting of information that is already collected elsewhere, particularly with regard to formula rates and fuel costs. The formula rate information is already collected in a new schedule at page 106 of Form 1. The Commission should also not require the submittal of fuel costs as this information is already submitted on the Energy Information Administration's EIA–923 "Power Plant Operations Report."

FERC Response: The information collected in the EIA–923 and FERC Form No. 1 is insufficient for the Commission to meet its statutory requirements related to AACs. Both the EIA–923 and FERC Form No. 1 collections are designed for a different purpose than the Form 580. As such, the information in these collections that is similar to the Form 580 information

[2] 16 U.S.C. 824d(f) (2006).

[3] 16 U.S.C. 824d(f)(b) (2006).

[4] 16 U.S.C. 825c (2006).

[5] 16 U.S.C. 825f (2006).

[6] *Cf.* 16 U.S.C. 825j (2006) (section 311 of the Federal Power Act provides for collection of information necessary or appropriate as a basis for recommending legislation).

does not have the granularity required for the FPA 205(f) review.

The Form 580 analysis requires the collection of fuel information by contract. In contrast, the EIA–923 form collects fuel information by supplier, and, in some cases, supplier information is further aggregated into line item information for "various suppliers".

FERC's Form No. 1 p. 106 only collects one data element related to the Form 580: *rate schedule or tariff number.* This data element will be used to help bridge the FERC Form No. 1 and Form 580 collections so that each can be used to support the analysis of the other. If the FERC Form No. 1 respondent files formula rate input changes at least annually, then an additional common data element is collected: the "docket number." The identification of the service schedule that contains the AAC and the rate schedule that houses the service schedule are needed for the efficiency and completeness of the Commission's Form 580 analysis. If only the rate schedule number were provided and not the service schedule identification, Commission staff would be required to search the many service schedules filed under each rate schedule to locate the AACs.

Reporting Thresholds: Commenters asked that the Commission only require information on natural gas contracts if such contracts in total account for more than, for example, 20% of the total recoveries under AACs during the period.

FERC Response: If a utility has a specific circumstance under which they think there is a compelling reason *not* to answer a particular question in the interrogatory, they can apply for a waiver of that particular question. It is not possible for the Commission to anticipate every individual circumstance under which it would not make sense for a particular utility to answer any given question.

Action: The Commission is requesting a three-year extension of the FERC Form No. 580 requirements, with changes to the FERC Form No. 580. The redesign of the FERC Form No. 580 provides for electronic submission in a user-friendly format.

Burden Statement: The table below provides an estimate of the annual public reporting burdens followed by the associated public costs.[7]

	No. of respondents	Annual No. of responses per respondent	Average burden hours per response	Total annual burden hours
	(1)	(2)	(3)	(1)x(2)x(3)
Respondents with FACs	45	0.5	103[7]	2310
Respondents with AACs but no FACs	125	0.5	20	1250
Respondents with no AACs (no FACs)	40	0.5	2	40
Sub Total				3600
One-time burden of learning new software	45	.5	20	450
Total				4150

The total annual cost to respondents[8] is estimated as follows.

FERC Data collection	Total annual burden hours	Estimated hourly cost ($)	Estimated total annual cost to respondents ($)[7]
	(1)	(2)	(2) X (1)
Form 580	4150	$66.29	$275,104

The reporting burden includes the total time, effort, or financial resources expended to generate, maintain, retain, disclose, or provide the information including: (1) Reviewing instructions; (2) developing, acquiring, installing, and utilizing technology and systems for the purposes of collecting, validating, verifying, processing, maintaining, disclosing and providing information; (3) adjusting the existing ways to comply with any previously applicable instructions and requirements; (4) training personnel to respond to a collection of information; (5) searching data sources; (6) completing and reviewing the collection of information; and (7) transmitting, or otherwise disclosing the information.

The estimate of cost for respondents is based upon salaries for professional and clerical support, as well as direct and indirect overhead costs. Direct costs include all costs directly attributable to providing this information, such as administrative costs and the cost for information technology. Indirect or overhead costs are costs incurred by an organization in support of its mission. These costs apply to activities which benefit the whole organization rather than any one particular function or activity.

Comments are invited on: (1) Whether the proposed collections of information are necessary for the proper performance of the functions of the Commission, including whether the information will have practical utility; (2) the accuracy of the agency's estimates of the burden of the proposed collections of information, including the validity of the methodology and assumptions used; (3) ways to enhance the quality, utility and clarity of the information to be collected; and (4) ways to minimize the burden of the collections of information on those who are to respond, including the use of appropriate automated, electronic,

[7] These figures may not be exact, due to rounding and/or truncating.

[8] Using 2,080 hours/year, the estimated cost for 1 full-time employee is $137,874/year. The estimated hourly cost is $66.29 (or $137,874/2,080).

mechanical, or other technological collection techniques or other forms of information technology, *e.g.,* permitting electronic submission of responses.

Kimberly D. Bose,

Secretary.

[FR Doc. 2010–14953 Filed 6–18–10; 8:45 am]

BILLING CODE 6717–01–P

DEPARTMENT OF ENERGY

Federal Energy Regulatory Commission

[Docket No. CP10–454–000]

Wyckoff Gas Storage Company LLC; Notice of Application

June 15, 2010.

On June 10, 2010, Wyckoff Gas Storage Company, LLC, ("Wyckoff"), 6733 South Yale, Tulsa, OK 74136, pursuant to section 7(c) of the Natural Gas Act (NGA) and Part 157 of the Commission's regulations, filed an abbreviated application to amend its certificates of public convenience and necessity to (1) drill and complete the previously authorized, but not yet drilled, injection/withdrawal well I/W #6 into the Onondaga reef zone as a horizontal well with two laterals; and (2) rework the existing well I/W #3 so as to extend it horizontally across the reef with two separate laterals. This filing is available for review at the Commission in the Public Reference Room or may be viewed on the Commission's Web site at *http://www.ferc.gov* using the "e-Library" link. Enter the docket number excluding the last three digits in the docket number field to access the document. For assistance, contact FERC at *FERCOnlineSupport@ferc.gov* or call toll-free, (866) 208–3676, or for TTY, (202) 502–8659.

Any questions regarding this application should be directed to John A. Boone, Wyckoff Gas Storage Company, LLC, 6733 South Yale, Tulsa, OK 74136, (918) 491–4440 or *johnbo@kfoc.net.*

Pursuant to section 157.9 of the Commission's rules, 18 CFR 157.9, within 90 days of this Notice the Commission staff will either: Complete its environmental assessment (EA) and place it into the Commission's public record (eLibrary) for this proceeding, or issue a Notice of Schedule for Environmental Review. If a Notice of Schedule for Environmental Review is issued, it will indicate, among other milestones, the anticipated date for the Commission staff's issuance of the final environmental impact statement (FEIS) or EA for this proposal. The filing of the EA in the Commission's public record for this proceeding or the issuance of a Notice of Schedule for Environmental Review will serve to notify federal and state agencies of the timing for the completion of all necessary reviews, and the subsequent need to complete all federal authorizations within 90 days of the date of issuance of the Commission staff's FEIS or EA.

There are two ways to become involved in the Commission's review of this project. First, any person wishing to obtain legal status by becoming a party to the proceedings for this project should, on or before the below listed comment date, file with the Federal Energy Regulatory Commission, 888 First Street, NE., Washington, DC 20426, a motion to intervene in accordance with the requirements of the Commission's Rules of Practice and Procedure (18 CFR 385.214 or 385.211) and the Regulations under the NGA (18 CFR 157.10). A person obtaining party status will be placed on the service list maintained by the Secretary of the Commission and will receive copies of all documents filed by the applicant and by all other parties. A party must submit 14 copies of filings made with the Commission and must mail a copy to the applicant and to every other party in the proceeding. Only parties to the proceeding can ask for court review of Commission orders in the proceeding.

However, a person does not have to intervene in order to have comments considered. The second way to participate is by filing with the Secretary of the Commission, as soon as possible, an original and two copies of comments in support of or in opposition to this project. The Commission will consider these comments in determining the appropriate action to be taken, but the filing of a comment alone will not serve to make the filer a party to the proceeding. The Commission's rules require that persons filing comments in opposition to the project provide copies of their protests only to the party or parties directly involved in the protest.

Persons who wish to comment only on the environmental review of this project should submit an original and two copies of their comments to the Secretary of the Commission. Environmental commenters will be placed on the Commission's environmental mailing list, will receive copies of the environmental documents, and will be notified of meetings associated with the Commission's environmental review process. Environmental commenters will not be required to serve copies of filed documents on all other parties. However, the non-party commenters will not receive copies of all documents filed by other parties or issued by the Commission (except for the mailing of environmental documents issued by the Commission) and will not have the right to seek court review of the Commission's final order.

Motions to intervene, protests and comments may be filed electronically via the internet in lieu of paper; see, 18 CFR 385.2001(a)(1)(iii) and the instructions on the Commission's Web site under the "e-Filing" link. The Commission strongly encourages electronic filings.

Comment Date: July 6, 2010.

Kimberly D. Bose,

Secretary.

[FR Doc. 2010–14949 Filed 6–18–10; 8:45 am]

BILLING CODE 6717–01–P

DEPARTMENT OF ENERGY

Federal Energy Regulatory Commission

[Project No. 13732–000]

Portland Water Bureau; Notice of Application Accepted for Filing and Soliciting Comments, Motions To Intervene, Protests, Recommendations, and Terms and Conditions

June 15, 2010.

Take notice that the following hydroelectric application has been filed with the Commission and is available for public inspection:

a. *Type of Application:* Conduit Exemption.

b. *Project No.:* P–13732–000.

c. *Date filed:* April 30, 2010.

d. *Applicant:* City of Portland Water Bureau.

e. *Name of Project:* Vernon Station Hydroelectric Project.

f. *Location:* The Vernon Station Hydroelectric Project would be located at the City of Portland Water Bureau's Vernon Water Tank Site, in Multnomah County, Oregon. The land in which all the project structures are located is owned by the applicant.

g. *Filed Pursuant to:* Federal Power Act 16 U.S.C. 791a—825r.

h. *Applicant Contact:* Mr. Bryan Robinson, City of Portland Water Bureau, 1900 N. Interstate, Portland, OR 97227; (503) 823–7221; *bryanrobinson@ci.portland.or.us.*

i. *FERC Contact:* Kelly Houff, (202) 502–6393, *Kelly.Houff@ferc.gov.*

j. *Status of Environmental Analysis:* This application is ready for

environmental analysis at this time, and the Commission is requesting comments, reply comments, recommendations, terms and conditions, and prescriptions.

k. *Deadline for filing responsive documents:* Due to the small size and location of the proposed project in a closed system, as well as the resource agency consultation letters filed with the application, the 60-day timeframe specified in 18 CFR 4.43(b) for filing all comments, motions to intervene, protests, recommendations, terms and conditions, and prescriptions is shortened to 30 days from the issuance date of this notice. All reply comments filed in response to comments submitted by any resource agency, Indian tribe, or person, must be filed with the Commission within 45 days from the issuance date of this notice.

Comments, protests, and interventions may be filed electronically via the Internet in lieu of paper; *see* 18 CFR 385.2001(a)(1)(iii) and the instructions on the Commission's web site under the "e-Filing" link. The Commission strongly encourages electronic filings.

The Commission's Rules of Practice and Procedure require all intervenors filing documents with the Commission to serve a copy of that document on each person in the official service list for the project. Further, if an intervenor files comments or documents with the Commission relating to the merits of an issue that may affect the responsibilities of a particular resource agency, they must also serve a copy of the document on that resource agency.

l. *Description of Project:* The proposed Vernon Station Hydroelectric Project consists of: (1) one proposed turbine generating unit, with a nameplate capacity of 25 kilowatts, which will be installed in parallel with the pressure reducing valves at the City of Portland Water Bureau's Vernon Water Tank Site; and (2) appurtenant facilities. The project would have an estimated annual generation of 205,860 kilowatt-hours that would be sold to a local utility.

m. This filing is available for review and reproduction at the Commission in the Public Reference Room, Room 2A, 888 First Street, NE., Washington, DC 20426. The filing may also be viewed on the Web at *http://www.ferc.gov* using the "eLibrary" link. Enter the docket number, here P–13732–000, in the docket number field to access the document. For assistance, call toll-free 1–866–208–3676 or e-mail *FERCOnlineSupport@ferc.gov.* For TTY, call (202) 502–8659. A copy is also available for review and reproduction at the address in item h above.

n. *Development Application*—Any qualified applicant desiring to file a competing application must submit to the Commission, on or before the specified deadline date for the particular application, a competing development application, or a notice of intent to file such an application. Submission of a timely notice of intent allows an interested person to file the competing development application no later than 120 days after the specified deadline date for the particular application. Applications for preliminary permits will not be accepted in response to this notice.

o. *Notice of Intent*—A notice of intent must specify the exact name, business address, and telephone number of the prospective applicant, and must include an unequivocal statement of intent to submit a competing development application. A notice of intent must be served on the applicant(s) named in this public notice.

p. *Protests or Motions to Intervene*—Anyone may submit a protest or a motion to intervene in accordance with the requirements of Rules of Practice and Procedure, 18 CFR 385.210, 385.211, and 385.214. In determining the appropriate action to take, the Commission will consider all protests filed, but only those who file a motion to intervene in accordance with the Commission's Rules may become a party to the proceeding. Any protests or motions to intervene must be received on or before the specified deadline date for the particular application.

q. All filings must (1) Bear in all capital letters the title "PROTEST", "MOTION TO INTERVENE", "NOTICE OF INTENT TO FILE COMPETING APPLICATION", "COMPETING APPLICATION", "COMMENTS", "REPLY COMMENTS," "RECOMMENDATIONS," "TERMS AND CONDITIONS," or "PRESCRIPTIONS;" (2) set forth in the heading the name of the applicant and the project number of the application to which the filing responds; (3) furnish the name, address, and telephone number of the person protesting or intervening; and (4) otherwise comply with the requirements of 18 CFR 385.2001 through 385.2005. All comments, recommendations, terms and conditions or prescriptions must set forth their evidentiary basis and otherwise comply with the requirements of 18 CFR 4.34(b). Agencies may obtain copies of the application directly from the applicant. Any of these documents must be filed by providing the original and eight copies to: The Secretary, Federal Energy Regulatory Commission, 888 First Street, NE., Washington, DC 20426. An additional copy must be sent to Director, Division of Hydropower Administration and Compliance, Office of Energy Projects, Federal Energy Regulatory Commission, at the above address. A copy of any protest or motion to intervene must be served upon each representative of the applicant specified in the particular application. A copy of all other filings in reference to this application must be accompanied by proof of service on all persons listed in the service list prepared by the Commission in this proceeding, in accordance with 18 CFR 4.34(b) and 385.2010.

r. *Waiver of Pre-filing Consultation:* January 2010, the applicant requested the agencies' support to waive the Commission's consultation requirements under 18 CFR 4.38(c). On February 12, 2010, the Oregon Department of Forestry concurred with this request. On March 12, 2010, the U.S. Fish and Wildlife Service concurred with this request as did the U.S. Forest Service on March 29, 2010. No other comments were received. Therefore, we intend to accept the consultation that has occurred on this project during the pre-filing period and we intend to waive pre-filing consultation under section 4.38(c), which requires, among other things, conducting studies requested by resource agencies, and distributing and consulting on a draft exemption application.

Kimberly D. Bose,

Secretary.

[FR Doc. 2010–14946 Filed 6–18–10; 8:45 am]

BILLING CODE 6717–01–P

DEPARTMENT OF ENERGY

Federal Energy Regulatory Commission

[Docket Nos. CP10–448–000; PF09–15–000]

Dominion Transmission, Inc.; Notice of Application

June 14, 2010.

Take notice that on June 1, 2010, Dominion Transmission, Inc. (Dominion), 120 Tredegar Street, Richmond, VA, filed in the above referenced docket an application pursuant to section 7(c) of the Natural Gas Act seeking authorization to construct, install, own, operate, and maintain certain pipeline and compression facilities in West Virginia and Pennsylvania that comprise its Appalachian Gateway Project. Specifically, Dominion requests (1) Authorization to construct a total of approximately 107.4 miles of varying

diameter pipeline; (2) authorization to construct four new compressor stations and upgrade two additional stations for a total of approximately 17,965 horsepower; (3) approval of incremental transportation rates; and (4) acceptance of the pro forma tariff sheets included in Exhibit P to the application. Dominion estimated that cost of the Appalachian Gateway project to be approximately $633,757,763, all as more fully set forth in the application. This filing is available for review at the Commission in the Public Reference Room or may be viewed on the Commission's Web site at *http://www.fer.gov* using the "eLibrary" link. Enter the docket number excluding the last three digits in the docket number field to access the document. For assistance, please contact FERC Online Support at *FERCOnlineSupport@ferc.gov* or toll free at (866) 208–3676, or for TTY, contact (202) 502–8659.

Any questions regarding this Application should be directed to Brad Knisley, Regulatory and Certificates Analyst II, Dominion Transmission, Inc., 701 East Cary Street, Richmond, VA 23219, telephone no. (804) 771–4412, facsimile no. (804) 771–4804 and *e-mail: Brad.A.Knisley@dom.com,* or Amanda Prestage, Regulatory and Certificates Analyst II, Dominion Transmission, Inc., 701 East Cary Street, Richmond, VA 23219, telephone no. (804) 771–4416, facsimile no. (804) 771–4804 and *e-mail: Amanda.K.Prestage@dom.com.*

On October 6, 2009, the Commission staff granted Dominion's request to utilize the National Environmental Policy Act (NEPA) Pre-Filling Process and assigned Docket Number PF09–15–000 to staff activities involving the Apex Expansion. Now, as of the filing Dominion's application on June 1, 2010, the NEPA Pre-Filling Process for this project has ended. From this time forward, Dominion's proceeding will be conducted in Docket No. CP10–448–000, as noted in the caption of this Notice.

Pursuant to section 157.9 of the Commission's rules, 18 CFR 157.9, within 90 days of this Notice the Commission staff will either: Complete its environmental assessment (EA) and place it into the Commission's public record (eLibrary) for this proceeding; or issue a Notice of Schedule for Environmental Review. If a Notice of Schedule for Environmental Review is issued, it will indicate, among other milestones, the anticipated date for the Commission staff's issuance of the final environmental impact statement (FEIS) or EA for this proposal. The filing of the EA in the Commission's public record for this proceeding or the issuance of a Notice of Schedule for Environmental Review will serve to notify federal and state agencies of the timing for the completion of all necessary reviews, and the subsequent need to complete all federal authorizations within 90 days of the date of issuance of the Commission staff's FEIS or EA.

There are two ways to become involved in the Commission's review of this project. First, any person wishing to obtain legal status by becoming a party to the proceedings for this project should, on or before the comment date stated below, file with the Federal Energy Regulatory Commission, 888 First Street, NE., Washington, DC 20426, a motion to intervene in accordance with the requirements of the Commission's Rules of Practice and Procedure (18 CFR 385.214 or 385.211) and the Regulations under the NGA (18 CFR 157.10). A person obtaining party status will be placed on the service list maintained by the Secretary of the Commission and will receive copies of all documents filed by the applicant and by all other parties. A party must submit 14 copies of filings made with the Commission and must mail a copy to the applicant and to every other party in the proceeding. Only parties to the proceeding can ask for court review of Commission orders in the proceeding.

However, a person does not have to intervene in order to have comments considered. The second way to participate is by filing with the Secretary of the Commission, as soon as possible, an original and two copies of comments in support of or in opposition to this project. The Commission will consider these comments in determining the appropriate action to be taken, but the filing of a comment alone will not serve to make the filer a party to the proceeding. The Commission's rules require that persons filing comments in opposition to the project provide copies of their protests only to the party or parties directly involved in the protest.

Persons who wish to comment only on the environmental review of this project should submit an original and two copies of their comments to the Secretary of the Commission. Environmental commentors will be placed on the Commission's environmental mailing list, will receive copies of the environmental documents, and will be notified of meetings associated with the Commission's environmental review process. Environmental commentors will not be required to serve copies of filed documents on all other parties. However, the non-party commentors will not receive copies of all documents filed by other parties or issued by the Commission (except for the mailing of environmental documents issued by the Commission) and will not have the right to seek court review of the Commission's final order.

The Commission strongly encourages electronic filings of comments, protests and interventions in lieu of paper using the "eFiling" link at *http://www.ferc.gov.* Persons unable to file electronically should submit an original and 14 copies of the protest or intervention to the Federal Energy regulatory Commission, 888 First Street, NE., Washington, DC 20426.

Comment Date: July 6, 2010.

Kimberly D. Bose,

Secretary.

[FR Doc. 2010–14943 Filed 6–18–10; 8:45 am]

BILLING CODE 6717–01–P

DEPARTMENT OF ENERGY

Federal Energy Regulatory Commission

[Project No. 1888–027]

York Haven Power Company, LLC; Notice of Cancellation of Dispute Resolution Panel Meeting and Technical Conference

June 11, 2010.

The technical conference scheduled for Monday, June 14, 2010, from 1 p.m. to 5 p.m. at the Holiday Inn and Conference Center in New Cumberland, PA is cancelled. On June 11, 2010, the Pennsylvania Department of Environmental Protection withdrew its notice of study dispute filed on April 29, 2010. The technical meeting is cancelled in response to the withdrawal of the study dispute. The three-person Dispute Resolution Panel (Panel) formed pursuant to 18 CFR 5.14(d) on May 19, 2010, Commission staff, in response to the filing of a notice of study dispute is disbanded.

Kimberly D. Bose,

Secretary.

[FR Doc. 2010–14942 Filed 6–18–10; 8:45 am]

BILLING CODE 6717–01–P

DEPARTMENT OF ENERGY

Federal Energy Regulatory Commission

Combined Notice of Filings #1

June 10, 2010.

Take notice that the Commission received the following electric rate filings:

Docket Numbers: ER07–1372–018; ER09–1126–002.
Applicants: Midwest Independent Transmission System Operator, Inc.
Description: Midwest Independent Transmission System Operator, Inc submits revisions to the Open Access Transmission and Operating Reserve Markets Tariff.
Filed Date: 06/09/2010.
Accession Number: 20100610–0201.
Comment Date: 5 p.m. Eastern Time on Wednesday, June 30, 2010.

Docket Numbers: ER10–183–002.
Applicants: Otter Tail Power Company.
Description: Otter Tail Power Company submits Open Access Transmission, Energy, and Operating Reserve markets Tariff.
Filed Date: 06/09/2010.
Accession Number: 20100610–0205.
Comment Date: 5 p.m. Eastern Time on Wednesday, June 30, 2010.

Docket Numbers: ER10–863–001.
Applicants: Midwest Independent Transmission System Operator, Inc.
Description: Midwest Independent Transmission System Operator, Inc submits proposed revisions to the Agreement to Transmission Facilities Owners *etc.*
Filed Date: 06/09/2010.
Accession Number: 20100610–0202.
Comment Date: 5 p.m. Eastern Time on Wednesday, June 30, 2010.

Docket Numbers: ER10–1410–000.
Applicants: Virginia Electric and Power Company.
Description: Virginia Electric and Power Company submits its baseline tariff filing of an amended and restated market-based sales tariff *etc.,* to be effective 6/30/2010.
Filed Date: 06/10/2010.
Accession Number: 20100610–5000.
Comment Date: 5 p.m. Eastern Time on Thursday, July 01, 2010.

Docket Numbers: ER10–1411–000.
Applicants: PacifiCorp.
Description: PacifiCorp submits Trust Agreement with Basin Electric Power Cooperative to be designated as their First Revised Rate Schedule FERC No 136.
Filed Date: 06/09/2010.
Accession Number: 20100610–0204.
Comment Date: 5 p.m. Eastern Time on Wednesday, June 30, 2010.

Docket Numbers: ER10–1412–000.
Applicants: Allegheny Power.
Description: Allegheny Power submits notice of cancellation and four revised service agreement cover sheets to cancel interconnection and operating agreements with Allegheny Energy Supply Company, LLC.
Filed Date: 06/09/2010.
Accession Number: 20100610–0203.
Comment Date: 5 p.m. Eastern Time on Wednesday, June 30, 2010.

Docket Numbers: ER10–1413–000.
Applicants: Midwest Independent System Operator, Inc.
Description: Midwest Independent System Operator, Inc submits an executed Amended and Restated Interconnection Agreement.
Filed Date: 06/09/2010.
Accession Number: 20100610–0207.
Comment Date: 5 p.m. Eastern Time on Wednesday, June 30, 2010.

Docket Numbers: ER10–1414–000.
Applicants: Auburndale Power Partners, Limited Partnership.
Description: Auburndale Power Partners, Limited Partnership submits tariff filing per 35.12: Auburndale, FERC Electric Tariff to be effective 6/10/2010.
Filed Date: 06/10/2010.
Accession Number: 20100610–5019.
Comment Date: 5 p.m. Eastern Time on Thursday, July 01, 2010.

Docket Numbers: ER10–1415–000.
Applicants: Idaho Power Company.
Description: Idaho Power Company submits Notice of Cancellation of Rate Schedules.
Filed Date: 06/10/2010.
Accession Number: 20100610–0208.
Comment Date: 5 p.m. Eastern Time on Thursday, July 01, 2010.

Docket Numbers: ER10–1416–000.
Applicants: Pasco Cogen, Ltd.
Description: Pasco Cogen, Ltd. submits tariff filing per 35.12: Pasco, FERC Electric Tariff to be effective 6/10/2010.
Filed Date: 06/10/2010.
Accession Number: 20100610–5030.
Comment Date: 5 p.m. Eastern Time on Thursday, July 01, 2010.

Docket Numbers: ER10–1417–000.
Applicants: Orange and Rockland Utilities, Inc.
Description: Orange and Rockland Utilities, Inc. submits tariff filing per 35: Re-filing of O&R OATT baseline to be effective 6/10/2010.
Filed Date: 06/10/2010.
Accession Number: 20100610–5044.
Comment Date: 5 p.m. Eastern Time on Thursday, July 01, 2010.

Docket Numbers: ER10–1418–000.
Applicants: Exelon Generation Company, LLC.
Description: Exelon Generation Company, LLC submits tariff filing per 35.12: Rate Schedule 20 to be effective 6/1/2011.
Filed Date: 06/10/2010.
Accession Number: 20100610–5059.
Comment Date: 5 p.m. Eastern Time on Thursday, July 01, 2010.

Docket Numbers: ER10–1419–000.
Applicants: Citadel Energy Strategies LLC.
Description: Citadel Energy Strategies LLC submits tariff filing per 35.12: Baseline Tariff Filing to be effective 6/10/2010 under ER10–01419–000 Filing Type: 360.
Filed Date: 06/10/2010.
Accession Number: 20100610–5077.
Comment Date: 5 p.m. Eastern Time on Thursday, July 01, 2010.

Take notice that the Commission received the following electric reliability filings:

Docket Numbers: RR10–11–000.
Applicants: North American Electric Reliability Corporation.
Description: Petition of North American Electric Reliability Corporation for Approval of Revised Pro Forma Delegation Agreement, Revised Delegation Agreements with the Eight Regional Entities, and Amendments to the NERC Rules of Procedure.
Filed Date: 06/09/2010.
Accession Number: 20100609–5138.
Comment Date: 5 p.m. Eastern Time on Friday, July 09, 2010.

Any person desiring to intervene or to protest in any of the above proceedings must file in accordance with Rules 211 and 214 of the Commission's Rules of Practice and Procedure (18 CFR 385.211 and 385.214) on or before 5 p.m. Eastern time on the specified comment date. It is not necessary to separately intervene again in a subdocket related to a compliance filing if you have previously intervened in the same docket. Protests will be considered by the Commission in determining the appropriate action to be taken, but will not serve to make protestants parties to the proceeding. Anyone filing a motion to intervene or protest must serve a copy of that document on the Applicant. In reference to filings initiating a new proceeding, interventions or protests submitted on or before the comment deadline need not be served on persons other than the Applicant.

As it relates to any qualifying facility filings, the notices of self-certification [or self-recertification] listed above, do not institute a proceeding regarding qualifying facility status. A notice of self-certification [or self-recertification]

simply provides notification that the entity making the filing has determined the facility named in the notice meets the applicable criteria to be a qualifying facility. Intervention and/or protest do not lie in dockets that are qualifying facility self-certifications or self-recertifications. Any person seeking to challenge such qualifying facility status may do so by filing a motion pursuant to 18 CFR 292.207(d)(iii). Intervention and protests may be filed in response to notices of qualifying facility dockets other than self-certifications and self-recertifications.

The Commission encourages electronic submission of protests and interventions in lieu of paper, using the FERC Online links at *http://www.ferc.gov.* To facilitate electronic service, persons with Internet access who will eFile a document and/or be listed as a contact for an intervenor must create and validate an eRegistration account using the eRegistration link. Select the eFiling link to log on and submit the intervention or protests.

Persons unable to file electronically should submit an original and 14 copies of the intervention or protest to the Federal Energy Regulatory Commission, 888 First St., NE., Washington, DC 20426.

The filings in the above proceedings are accessible in the Commission's eLibrary system by clicking on the appropriate link in the above list. They are also available for review in the Commission's Public Reference Room in Washington, DC. There is an eSubscription link on the Web site that enables subscribers to receive e-mail notification when a document is added to a subscribed docket(s). For assistance with any FERC Online service, please e-mail *FERCOnlineSupport@ferc.gov* or call (866) 208–3676 (toll free). For TTY, call (202) 502–8659.

Nathaniel J. Davis, Sr.,

Deputy Secretary.

[FR Doc. 2010–14853 Filed 6–18–10; 8:45 am]

BILLING CODE 6717–01–P

DEPARTMENT OF ENERGY

Federal Energy Regulatory Commission

Combined Notice of Filings #1

June 11, 2010.

Take notice that the Commission received the following exempt wholesale generator filings:

Docket Numbers: EG10–38–000.
Applicants: CalRENEW–1 LLC.
Description: Notice of Self-Certification of Exempt Wholesale Generator Status of CalRENEW–1 LLC.
Filed Date: 04/30/2010.
Accession Number: 20100430–5496.
Comment Date: 5 p.m. e.t. on Friday, June 25, 2010.

Take notice that the Commission received the following electric rate filings:

Docket Numbers: ER97–3583–004.
Applicants: GS Electric Generating Cooperative Inc.
Description: GS Electric Generating Cooperative, Inc submits Substitute First Revised Sheet No 1 to its Second Revised Rate Schedule No 1.
Filed Date: 06/10/2010.
Accession Number: 20100611–0024.
Comment Date: 5 p.m. e.t. on Thursday, July 1, 2010.

Docket Numbers: ER09–1039–001.
Applicants: Southwest Power Pool, Inc.
Description: Informational Report of Southwest Power Pool, Inc.
Filed Date: 06/11/2010.
Accession Number: 20100611–5033.
Comment Date: 5 p.m. e.t. on Friday, July 2, 2010.

Docket Numbers: ER10–1420–000.
Applicants: Alcoa Power Generating Inc.
Description: Alcoa Power Generating, Inc submits amendments to its Electric Rate Schedule 19 the Power Exchange Agreement with Tennessee Valley Authority.
Filed Date: 06/10/2010.
Accession Number: 20100611–0202.
Comment Date: 5 p.m. e.t. on Thursday, July 1, 2010.

Take notice that the Commission received the following electric securities filings:

Docket Numbers: ES10–44–000.
Applicants: Orange and Rockland Utilities, Inc.
Description: Supplement to Application of Orange and Rockland Utilities, Inc.
Filed Date: 06/10/2010.
Accession Number: 20100610–5126.
Comment Date: 5 p.m. e.t. on Monday, June 21, 2010.

Take notice that the Commission received the following electric reliability filings:

Docket Numbers: RR10–12–000.
Applicants: North American Electric Reliability Corp.
Description: Petition of the North American Electric Reliability Corporation for Approval of the Reliability Standard Processes Manual Incorporating Proposed Revisions to the Reliability Standards Development Process.
Filed Date: 06/10/2010.
Accession Number: 20100610–5128.
Comment Date: 5 p.m. e.t. on Monday, July 12, 2010.

Any person desiring to intervene or to protest in any of the above proceedings must file in accordance with Rules 211 and 214 of the Commission's Rules of Practice and Procedure (18 CFR 385.211 and 385.214) on or before 5 p.m. e.t. on the specified comment date. It is not necessary to separately intervene again in a subdocket related to a compliance filing if you have previously intervened in the same docket. Protests will be considered by the Commission in determining the appropriate action to be taken, but will not serve to make protestants parties to the proceeding. Anyone filing a motion to intervene or protest must serve a copy of that document on the Applicant. In reference to filings initiating a new proceeding, interventions or protests submitted on or before the comment deadline need not be served on persons other than the Applicant.

As it relates to any qualifying facility filings, the notices of self-certification [or self-recertification] listed above, do not institute a proceeding regarding qualifying facility status. A notice of self-certification [or self-recertification] simply provides notification that the entity making the filing has determined the facility named in the notice meets the applicable criteria to be a qualifying facility. Intervention and/or protest do not lie in dockets that are qualifying facility self-certifications or self-recertifications. Any person seeking to challenge such qualifying facility status may do so by filing a motion pursuant to 18 CFR 292.207(d)(iii). Intervention and protests may be filed in response to notices of qualifying facility dockets other than self-certifications and self-recertifications.

The Commission encourages electronic submission of protests and interventions in lieu of paper, using the FERC Online links at *http://www.ferc.gov.* To facilitate electronic service, persons with Internet access who will eFile a document and/or be listed as a contact for an intervenor must create and validate an eRegistration account using the eRegistration link. Select the eFiling link to log on and submit the intervention or protests.

Persons unable to file electronically should submit an original and 14 copies of the intervention or protest to the Federal Energy Regulatory Commission, 888 First St., NE., Washington, DC 20426.

The filings in the above proceedings are accessible in the Commission's

eLibrary system by clicking on the appropriate link in the above list. They are also available for review in the Commission's Public Reference Room in Washington, DC. There is an eSubscription link on the Web site that enables subscribers to receive e-mail notification when a document is added to a subscribed docket(s). For assistance with any FERC Online service, please e-mail *FERCOnlineSupport@ferc.gov.* or call (866) 208–3676 (toll free). For TTY, call (202) 502–8659.

Nathaniel J. Davis, Sr.,

Deputy Secretary.

[FR Doc. 2010–14854 Filed 6–18–10; 8:45 am]

BILLING CODE 6717–01–P

DEPARTMENT OF ENERGY

Federal Energy Regulatory Commission

Combined Notice of Filings #1

June 8, 2010.

Take notice that the Commission received the following exempt wholesale generator filings:

Docket Numbers: EG10–42–000.
Applicants: Longview Power, LLC.
Description: Self-Certification of EG or FC of Longview Power, LLC.
Filed Date: 06/07/2010.
Accession Number: 20100607–5118.
Comment Date: 5 p.m. Eastern Time on Monday, June 28, 2010.

Docket Numbers: EG10–43–000.
Applicants: Alta Wind I, LLC.
Description: Notice of Self-Certification of Exempt Wholesale Generator Status of Alta Wind I, LLC.
Filed Date: 06/08/2010.
Accession Number: 20100608–5051.
Comment Date: 5 p.m. Eastern Time on Tuesday, June 29, 2010.

Docket Numbers: EG10–44–000.
Applicants: Alta Wind II, LLC.
Description: Notice of Self-Certification of Exempt Wholesale Generator Status of Alta Wind II, LLC.
Filed Date: 06/08/2010.
Accession Number: 20100608–5052.
Comment Date: 5 p.m. Eastern Time on Tuesday, June 29, 2010.

Docket Numbers: EG10–45–000.
Applicants: Alta Wind III, LLC.
Description: Notice of Self-Certification of Exempt Wholesale Generator Status of Alta Wind III, LLC.
Filed Date: 06/08/2010.
Accession Number: 20100608–5053.
Comment Date: 5 p.m. Eastern Time on Tuesday, June 29, 2010.

Docket Numbers: EG10–46–000.
Applicants: Alta Wind IV, LLC.
Description: Notice of Self-Certification of Exempt Wholesale Generator Status of Alta Wind IV, LLC.
Filed Date: 06/08/2010.
Accession Number: 20100608–5054.
Comment Date: 5 p.m. Eastern Time on Tuesday, June 29, 2010.

Docket Numbers: EG10–47–000.
Applicants: Alta Wind V, LLC.
Description: Notice of Self-Certification of Exempt Wholesale Generator Status of Alta Wind V, LLC.
Filed Date: 06/08/2010.
Accession Number: 20100608–5055.
Comment Date: 5 p.m. Eastern Time on Tuesday, June 29, 2010.

Take notice that the Commission received the following electric rate filings:

Docket Numbers: ER09–701–005.
Applicants: PJM Interconnection, LLC.
Description: PJM Interconnection, LLC submits revisions to Schedule 1 of the Amended and Restated Operating Agreement, *etc.* retroactively effective 8/28/09.
Filed Date: 06/07/2010.
Accession Number: 20100608–0203.
Comment Date: 5 p.m. Eastern Time on Monday, June 28, 2010.

Docket Numbers: ER10–27–003.
Applicants: Midwest Independent Transmission System Operator, Inc.
Description: Midwest Independent Transmission System Operator, Inc. submits Second Substitute Original Sheet 3822 to FERC Electric Tariff, Fourth Revised Volume 1.
Filed Date: 06/07/2010.
Accession Number: 20100607–0211.
Comment Date: 5 p.m. Eastern Time on Monday, June 28, 2010.

Docket Numbers: ER10–1064–001.
Applicants: 511 Plaza Energy, LLC.
Description: 511 Plaza Energy, LLC submits an amendment for authorization to make wholesale of energy and capacity at negotiated, market-based rates.
Filed Date: 06/01/2010.
Accession Number: 20100602–0233.
Comment Date: 5 p.m. Eastern Time on Tuesday, June 22, 2010.

Docket Numbers: ER10–1171–001.
Applicants: Bluco Energy, LLC.
Description: Bluco Energy, LLC submits the petition for Acceptance of Initial Tariff, Waivers and Blanket Authorization.
Filed Date: 06/07/2010.
Accession Number: 20100607–0210.
Comment Date: 5 p.m. Eastern Time on Monday, June 28, 2010.

Any person desiring to intervene or to protest in any of the above proceedings must file in accordance with Rules 211 and 214 of the Commission's Rules of Practice and Procedure (18 CFR 385.211 and 385.214) on or before 5 p.m. Eastern time on the specified comment date. It is not necessary to separately intervene again in a subdocket related to a compliance filing if you have previously intervened in the same docket. Protests will be considered by the Commission in determining the appropriate action to be taken, but will not serve to make protestants parties to the proceeding. Anyone filing a motion to intervene or protest must serve a copy of that document on the Applicant. In reference to filings initiating a new proceeding, interventions or protests submitted on or before the comment deadline need not be served on persons other than the Applicant.

As it relates to any qualifying facility filings, the notices of self-certification [or self-recertification] listed above, do not institute a proceeding regarding qualifying facility status. A notice of self-certification [or self-recertification] simply provides notification that the entity making the filing has determined the facility named in the notice meets the applicable criteria to be a qualifying facility. Intervention and/or protest do not lie in dockets that are qualifying facility self-certifications or self-recertifications. Any person seeking to challenge such qualifying facility status may do so by filing a motion pursuant to 18 CFR 292.207(d)(iii). Intervention and protests may be filed in response to notices of qualifying facility dockets other than self-certifications and self-recertifications.

The Commission encourages electronic submission of protests and interventions in lieu of paper, using the FERC Online links at *http://www.ferc.gov.* To facilitate electronic service, persons with Internet access who will eFile a document and/or be listed as a contact for an intervenor must create and validate an eRegistration account using the eRegistration link. Select the eFiling link to log on and submit the intervention or protests.

Persons unable to file electronically should submit an original and 14 copies of the intervention or protest to the Federal Energy Regulatory Commission, 888 First St., NE., Washington, DC 20426.

The filings in the above proceedings are accessible in the Commission's eLibrary system by clicking on the appropriate link in the above list. They are also available for review in the Commission's Public Reference Room in Washington, DC. There is an eSubscription link on the Web site that enables subscribers to receive e-mail

notification when a document is added to a subscribed docket(s). For assistance with any FERC Online service, please e-mail *FERCOnlineSupport@ferc.gov* or call (866) 208–3676 (toll free). For TTY, call (202) 502–8659.

Nathaniel J. Davis, Sr.,

Deputy Secretary.

[FR Doc. 2010–14856 Filed 6–18–10; 8:45 am]

BILLING CODE 6717–01–P

DEPARTMENT OF ENERGY

Federal Energy Regulatory Commission

Combined Notice of Filings # 1

June 14, 2010.

Take notice that the Commission received the following electric rate filings:

Docket Numbers: ER98–2782–017; ER98–2782–018; ER98–2782–019; ER06–146–004; ER07–930–002.

Applicants: AG-Energy, LP, Seneca Power Partners, LP, Sterling Power Partners, LP.

Description: Alliance MBR Sellers submits amended tariff sheets in compliance with Order No 697.

Filed Date: 06/11/2010.

Accession Number: 20100614–0203.

Comment Date: 5 p.m. Eastern Time on Friday, July 02, 2010.

Docket Numbers: ER10–895–003.

Applicants: The Detroit Edison Company.

Description: Detroit Edison Company submits amendment to request for delay to extend the termination of the PLD Agreement until 7/16/10.

Filed Date: 06/14/2010.

Accession Number: 20100614–0213.

Comment Date: 5 p.m. Eastern Time on Tuesday, July 06, 2010.

Docket Numbers: ER10–1156–001.

Applicants: Conectiv Delmarva Generation, Inc.

Description: Conectiv Delmarva Generation, Inc submits Substitute Original Sheet No 1 to FERC Electric Tariff, Original Volume No 2.

Filed Date: 06/11/2010.

Accession Number: 20100611–0213.

Comment Date: 5 p.m. Eastern Time on Friday, July 02, 2010.

Docket Numbers: ER10–1315–001.

Applicants: Florida Power Corporation.

Description: Florida Power Corporation submits revisions to Sheet No 4 *et al.* of its Power Sales Agreement with the City of Williston.

Filed Date: 06/11/2010.

Accession Number: 20100611–0212.

Comment Date: 5 p.m. Eastern Time on Friday, July 02, 2010.

Docket Numbers: ER10–1421–000.

Applicants: Citizens Choice Energy, LLC.

Description: Citizens Choice Energy, LLC submits a Petition for Acceptance of Initial Rate Schedule, Waivers and Blanket Authority.

Filed Date: 06/11/2010.

Accession Number: 20100611–0207.

Comment Date: 5 p.m. Eastern Time on Friday, July 02, 2010.

Docket Numbers: ER10–1422–000.

Applicants: PJM Interconnection, LLC.

Description: PJM Interconnection, LLC submits an executed interconnection service agreement *etc.*

Filed Date: 06/11/2010.

Accession Number: 20100611–0206.

Comment Date: 5 p.m. Eastern Time on Friday, July 02, 2010.

Docket Numbers: ER10–1423–000.

Applicants: Tampa Electric Company.

Description: Tampa Electric Co submits Second Revised Sheet No. 11 to First Revised Rate Schedule FERC No. 6.

Filed Date: 06/11/2010.

Accession Number: 20100611–0214.

Comment Date: 5 p.m. Eastern Time on Friday, July 02, 2010.

Docket Numbers: ER10–1424–000.

Applicants: Eagle Industrial Power Services (IL), LL.

Description: Eagle Industrial Power Services (IL), LLC submits application for market based rate authority and granting of waivers and Blanket Authorization, request for expedited consideration and prior notice waiver.

Filed Date: 06/11/2010.

Accession Number: 20100611–0218.

Comment Date: 5 p.m. Eastern Time on Friday, July 02, 2010.

Docket Numbers: ER10–1425–000.

Applicants: EDF Industrial Power Services (NY), LLC.

Description: EDF Industrial Power Services, LLC submits application for market based rate authority and granting of waivers and Blanket Authorization, request for expedited consideration and prior notice waiver.

Filed Date: 06/11/2010.

Accession Number: 20100611–0217.

Comment Date: 5 p.m. Eastern Time on Friday, July 02, 2010.

Docket Numbers: ER10–1426–000.

Applicants: Southwestern Public Service Company.

Description: Southwestern Public Service Company submits revised formula rate template for partial requirements service to Golden Spread Electric Cooperative, Inc, effective 7/1/08.

Filed Date: 06/11/2010.

Accession Number: 20100611–0216.

Comment Date: 5 p.m. Eastern Time on Friday, July 02, 2010.

Docket Numbers: ER10–1427–000.

Applicants: Brookfield Energy Marketing LP.

Description: Brookfield Energy Marketing LP submits tariff filing per 35.12: BEMLP FERC Electric Tariff to be effective 8/1/2010.

Filed Date: 06/11/2010.

Accession Number: 20100611–5072.

Comment Date: 5 p.m. Eastern Time on Friday, July 02, 2010.

Docket Numbers: ER10–1428–000.

Applicants: Pacific Gas and Electric Company.

Description: Notice of Termination for the FPL Energy, LLC Generator Special Facilities Agreement of Pacific Gas and Electric Company.

Filed Date: 06/14/2010.

Accession Number: 20100614–5017.

Comment Date: 5 p.m. Eastern Time on Tuesday, July 06, 2010.

Docket Numbers: ER10–1429–000.

Applicants: Tampa Electric Company.

Description: Tampa Electric Company submits tariff filing per 35.12: Baseline-Cost Based Tariff to be effective 6/14/2010.

Filed Date: 06/14/2010.

Accession Number: 20100614–5019.

Comment Date: 5 p.m. Eastern Time on Tuesday, July 06, 2010.

Docket Numbers: ER10–1430–000.

Applicants: Select Energy, Inc.

Description: Select Energy, Inc. submits notice of cancellation of FERC Electric Rate Schedule No 1.

Filed Date: 06/11/2010.

Accession Number: 20100614–0202.

Comment Date: 5 p.m. Eastern Time on Friday, July 02, 2010.

Docket Numbers: ER10–1431–000.

Applicants: PJM Interconnection, LLC.

Description: PJM Interconnection, LLC submits notice of cancellation of a Wholesale Market Participation Agreement with Southeastern Chester County Refuse Authority, *et al.*

Filed Date: 06/11/2010.

Accession Number: 20100614–0201.

Comment Date: 5 p.m. Eastern Time on Friday, July 02, 2010.

Docket Numbers: ER10–1432–000.

Applicants: Newcorp Resources Electric Cooperative.

Description: Newcorp Resources Electric Cooperative, Inc. submits its Baseline Filing Schedule, tariff filing per 35.12, to be effective 6/14/2010.

Filed Date: 06/14/2010.

Accession Number: 20100614–5036.

Comment Date: 5 p.m. Eastern Time on Tuesday, July 06, 2010.

Docket Numbers: ER10–1433–000.

Applicants: Florida Power Corporation.

Description: Florida Power Corporation submits Second Revised Sheet No 19 to First Revised Rate Schedule FERC No 80, effective 6/12/10.
Filed Date: 06/14/2010.
Accession Number: 20100614–0214.
Comment Date: 5 p.m. Eastern Time on Tuesday, July 06, 2010.

Docket Numbers: ER10–1434–000.
Applicants: Xcel Energy Services Inc.
Description: Southwestern Public Service Company submits Connection Agreement for the new Service Point for the new Lea County ERF Substation with Lea County Electric Cooperative, Inc.
Filed Date: 06/14/2010.
Accession Number: 20100614–0215.
Comment Date: 5 p.m. Eastern Time on Tuesday, July 06, 2010.

Docket Numbers: ER10–1435–000.
Applicants: Southern California Edison Company.
Description: Southern California Edison Company submits tariff filing per 35.13(a)(2)(iii): SGIA–DSA_GBU_N_061410 to be effective 6/15/2010.
Filed Date: 06/14/2010.
Accession Number: 20100614–5087.
Comment Date: 5 p.m. Eastern Time on Tuesday, July 06, 2010.

Any person desiring to intervene or to protest in any of the above proceedings must file in accordance with Rules 211 and 214 of the Commission's Rules of Practice and Procedure (18 CFR 385.211 and 385.214) on or before 5 p.m. Eastern time on the specified comment date. It is not necessary to separately intervene again in a subdocket related to a compliance filing if you have previously intervened in the same docket. Protests will be considered by the Commission in determining the appropriate action to be taken, but will not serve to make protestants parties to the proceeding. Anyone filing a motion to intervene or protest must serve a copy of that document on the Applicant. In reference to filings initiating a new proceeding, interventions or protests submitted on or before the comment deadline need not be served on persons other than the Applicant.

As it relates to any qualifying facility filings, the notices of self-certification [or self-recertification] listed above, do not institute a proceeding regarding qualifying facility status. A notice of self-certification [or self-recertification] simply provides notification that the entity making the filing has determined the facility named in the notice meets the applicable criteria to be a qualifying facility. Intervention and/or protest do not lie in dockets that are qualifying facility self-certifications or self-recertifications. Any person seeking to challenge such qualifying facility status may do so by filing a motion pursuant to 18 CFR 292.207(d)(iii). Intervention and protests may be filed in response to notices of qualifying facility dockets other than self-certifications and self-recertifications.

The Commission encourages electronic submission of protests and interventions in lieu of paper, using the FERC Online links at *http://www.ferc.gov.* To facilitate electronic service, persons with Internet access who will eFile a document and/or be listed as a contact for an intervenor must create and validate an eRegistration account using the eRegistration link. Select the eFiling link to log on and submit the intervention or protests.

Persons unable to file electronically should submit an original and 14 copies of the intervention or protest to the Federal Energy Regulatory Commission, 888 First St., NE., Washington, DC 20426.

The filings in the above proceedings are accessible in the Commission's eLibrary system by clicking on the appropriate link in the above list. They are also available for review in the Commission's Public Reference Room in Washington, DC. There is an eSubscription link on the Web site that enables subscribers to receive e-mail notification when a document is added to a subscribed dockets(s). For assistance with any FERC Online service, please e-mail *FERCOnlineSupport@ferc.gov.* or call (866) 208–3676 (toll free). For TTY, call (202) 502–8659.

Nathaniel J. Davis, Sr.,
Deputy Secretary.

[FR Doc. 2010–14858 Filed 6–18–10; 8:45 am]

BILLING CODE 6717–01–P

DEPARTMENT OF ENERGY

Federal Energy Regulatory Commission

Combined Notice of Filings #1

June 7, 2010.

Take notice that the Commission received the following electric rate filings:

Docket Numbers: ER99–1435–023; ER10–390–002; ER00–1814–011.
Applicants: Avista Corporation.
Description: Avista Corp *et al.* submits amendments to the limitations and exemptions sections of Avista's and Turbines respective market based rate tariffs.
Filed Date: 06/04/2010.
Accession Number: 20100604–0208.
Comment Date: 5 p.m. Eastern Time on Friday, June 25, 2010.

Docket Numbers: ER10–793–001.
Applicants: Wolverine Creek Goshen Interconnection.
Description: Wolverine Creek Goshen Interconnection, LLC *et al.* submits Common Facilities Agreement currently on file with Commission as Rate Schedules FERC No. 1 for WCGI and Wolverine.
Filed Date: 06/04/2010.
Accession Number: 20100604–0023.
Comment Date: 5 p.m. Eastern Time on Friday, June 25, 2010.

Docket Numbers: ER10–1261–001.
Applicants: E.ON U.S. LLC.
Description: Louisville Gas and Electric Company *et al.* submits an executed interconnection agreement with the City of Owensboro, Kentucky.
Filed Date: 06/04/2010.
Accession Number: 20100607–0201.
Comment Date: 5 p.m. Eastern Time on Friday, June 25, 2010.

Docket Numbers: ER10–1369–000.
Applicants: PJM Interconnection, LLC.
Description: PJM Interconnection, LLC submits at the request of its members, revisions to the Amended and Restated Operating Agreement.
Filed Date: 05/28/2010.
Accession Number: 20100601–0249.
Comment Date: 5 p.m. Eastern Time on Friday, June 18, 2010.

Docket Numbers: ER10–1397–000.
Applicants: PJM Interconnection, LLC.
Description: PJM Interconnection, LLC submits an executed interconnection service agreement.
Filed Date: 06/04/2010.
Accession Number: 20100604–0207.
Comment Date: 5 p.m. Eastern Time on Friday, June 25, 2010.

Docket Numbers: ER10–1398–000.
Applicants: PacifiCorp.
Description: PacifiCorp submits Notice of Termination of PacifiCorp Rate Schedule FERC 324, a Transmission Service Agreement between United States of America Department of Energy, *etc.*
Filed Date: 06/04/2010.
Accession Number: 20100604–0211.
Comment Date: 5 p.m. Eastern Time on Friday, June 25, 2010.

Docket Numbers: ER10–1399–000.
Applicants: PacifiCorp.
Description: PacifiCorp submits Notice of Termination for Service Agreement No 648 *et al.*
Filed Date: 06/04/2010.
Accession Number: 20100604–0212.
Comment Date: 5 p.m. Eastern Time on Friday, June 25, 2010.

Docket Numbers: ER10–1400–000.
Applicants: Midwest Independent Transmission System Operator, Inc.
Description: Midwest Independent Transmission System Operator, Inc. submits revisions to Section 2 of the Generator Interconnection Procedures in the Attachment X of their Open Access Transmission, *etc.*
Filed Date: 06/04/2010.
Accession Number: 20100607–0202.
Comment Date: 5 p.m. Eastern Time on Friday, June 25, 2010.

Docket Numbers: ER10–1401–000.
Applicants: California Independent System Operator Corporation.
Description: California Independent System Operator Corporation submits proposed amendments to its approved tariff to implement a revised transmission planning process.
Filed Date: 06/04/2010.
Accession Number: 20100607–0203.
Comment Date: 5 p.m. Eastern Time on Friday, June 25, 2010.

Docket Numbers: ER10–1402–000.
Applicants: PJM Interconnection, LLC.
Description: PJM Interconnection, LLC submits an executed Wholesale Market Participation Agreement with Charleston Clean Energy, LLC *et al.*
Filed Date: 06/07/2010.
Accession Number: 20100607–0206.
Comment Date: 5 p.m. Eastern Time on Monday, June 28, 2010.

Docket Numbers: ER10–1403–000.
Applicants: Stephentown Regulation Services LLC.
Description: Application of Stephentown Regulation Services LLC for acceptance of a market-based rate tariff and granting of waivers and blanket authorization.
Filed Date: 06/07/2010.
Accession Number: 20100607–0207.
Comment Date: 5 p.m. Eastern Time on Monday, June 28, 2010.

Docket Numbers: ER10–1404–000.
Applicants: Delmarva Power & Light Company.
Description: Delmarva Power & Light Company submits an executed Interconnection and Mutual Operating Agreement with Town of Smyma, Delaware.
Filed Date: 06/07/2010.
Accession Number: 20100607–0208.
Comment Date: 5 p.m. Eastern Time on Monday, June 28, 2010.

Docket Numbers: ER10–1405–000.
Applicants: Tampa Electric Company.
Description: Tampa Electric Company submits the Interconnection and Operating Agreement with Florida Power Corporation for the Dade City Substation Interconnection.
Filed Date: 06/07/2010.
Accession Number: 20100607–0209.
Comment Date: 5 p.m. Eastern Time on Monday, June 28, 2010.

Any person desiring to intervene or to protest in any of the above proceedings must file in accordance with Rules 211 and 214 of the Commission's Rules of Practice and Procedure (18 CFR 385.211 and 385.214) on or before 5 p.m. Eastern time on the specified comment date. It is not necessary to separately intervene again in a subdocket related to a compliance filing if you have previously intervened in the same docket. Protests will be considered by the Commission in determining the appropriate action to be taken, but will not serve to make protestants parties to the proceeding. Anyone filing a motion to intervene or protest must serve a copy of that document on the Applicant. In reference to filings initiating a new proceeding, interventions or protests submitted on or before the comment deadline need not be served on persons other than the Applicant.

As it relates to any qualifying facility filings, the notices of self-certification [or self-recertification] listed above, do not institute a proceeding regarding qualifying facility status. A notice of self-certification [or self-recertification] simply provides notification that the entity making the filing has determined the facility named in the notice meets the applicable criteria to be a qualifying facility. Intervention and/or protest do not lie in dockets that are qualifying facility self-certifications or self-recertifications. Any person seeking to challenge such qualifying facility status may do so by filing a motion pursuant to 18 CFR 292.207(d)(iii). Intervention and protests may be filed in response to notices of qualifying facility dockets other than self-certifications and self-recertifications.

The Commission encourages electronic submission of protests and interventions in lieu of paper, using the FERC Online links at *http://www.ferc.gov.* To facilitate electronic service, persons with Internet access who will eFile a document and/or be listed as a contact for an intervenor must create and validate an eRegistration account using the eRegistration link. Select the eFiling link to log on and submit the intervention or protests.

Persons unable to file electronically should submit an original and 14 copies of the intervention or protest to the Federal Energy Regulatory Commission, 888 First St. NE., Washington, DC 20426.

The filings in the above proceedings are accessible in the Commission's eLibrary system by clicking on the appropriate link in the above list. They are also available for review in the Commission's Public Reference Room in Washington, DC. There is an eSubscription link on the Web site that enables subscribers to receive e-mail notification when a document is added to a subscribed dockets(s). For assistance with any FERC Online service, please e-mail *FERCOnlineSupport@ferc.gov.* or call (866) 208–3676 (toll free). For TTY, call (202) 502–8659.

Nathaniel J. Davis, Sr.,
Deputy Secretary.

[FR Doc. 2010–14857 Filed 6–18–10; 8:45 am]

BILLING CODE 6717–01–P

DEPARTMENT OF ENERGY

Federal Energy Regulatory Commission

Combined Notice of Filings #1

June 09, 2010.

Take notice that the Commission received the following electric rate filings:

Docket Numbers: ER09–1142–007.
Applicants: New York Independent System Operator Inc.
Description: Explanation of how the New York Independent System Operator, Inc's proposed Tariff revisions that are pending in address the requirements of the Commission's May 6, 2010 Order.
Filed Date: 06/02/2010.
Accession Number: 20100602–5096.
Comment Date: 5 p.m. Eastern Time on Wednesday, June 23, 2010.

Docket Numbers: ER10–1222–001.
Applicants: DTE East China, LLC.
Description: DTE East China, LLC submits tariff filing per 35: DTE East China—Baseline Tariff Withdraw to be effective 5/14/2010.
Filed Date: 06/08/2010.
Accession Number: 20100608–5068.
Comment Date: 5 p.m. Eastern Time on Tuesday, June 29, 2010.

Docket Numbers: ER10–1299–001.
Applicants: Westar Energy, Inc.
Description: Westar Energy, Inc submits an Amendment to the Interconnection and Balancing Area Services Agreement with Midwest Energy, Inc, Rate Schedule FERC No 340.
Filed Date: 06/08/2010.
Accession Number: 20100609–0203.
Comment Date: 5 p.m. Eastern Time on Tuesday, June 29, 2010.

Docket Numbers: ER10–1406–000.
Applicants: Lake Cogen, Ltd.

Description: Lake Cogen, Ltd. submits its baseline tariff filing, FERC Electric Tariff, Original Volume No 1, to be effective 6/9/2010.

Filed Date: 06/09/2010.

Accession Number: 20100609–5000.

Comment Date: 5 p.m. Eastern Time on Wednesday, June 30, 2010.

Docket Numbers: ER10–1407–000.

Applicants: Florida Power Corporation.

Description: Florida Power Corporation submits their Interconnection and Operating Agreement with Tampa Electric Company for the Dade City Substation Interconnection, dated June 1, 2010.

Filed Date: 06/08/2010.

Accession Number: 20100609–0202.

Comment Date: 5 p.m. Eastern Time on Tuesday, June 29, 2010.

Docket Numbers: ER10–1408–000.

Applicants: California Independent System Operator Corporation.

Description: California Independent System Operator Corporation submits a Notice of Termination relation to a Large Generator Interconnection Agreement.

Filed Date: 06/08/2010.

Accession Number: 20100609–0201.

Comment Date: 5 p.m. Eastern Time on Tuesday, June 29, 2010.

Docket Numbers: ER10–1409–000.

Applicants: Central Hudson Gas & Electric Corporation.

Description: Central Hudson Gas & Electric Corp submits an executed Small Generator Interconnection Agreement with West Delaware Hydro Associates LP dated 5/27/10 *etc.*

Filed Date: 06/09/2010.

Accession Number: 20100609–0204.

Comment Date: 5 p.m. Eastern Time on Wednesday, June 30, 2010.

Take notice that the Commission received the following electric securities filings:

Docket Numbers: ES10–48–000.

Applicants: Trans-Allegheny Interstate Line Company.

Description: Application of Trans-Allegheny Interstate Line Company for authorization under Section 204 of the Federal Power Act to issue or borrow up to $300 Million in Short-Term Debt or Long-Term Debt to fund capital expenditures *etc.*

Filed Date: 06/08/2010.

Accession Number: 20100608–5094.

Comment Date: 5 p.m. Eastern Time on Tuesday, June 29, 2010.

Docket Numbers: ES10–49–000.

Applicants: Entergy Power, LLC.

Description: Application of Entergy Power, LLC, for Authorizations under FPA Section 204.

Filed Date: 06/08/2010.

Accession Number: 20100608–5110.

Comment Date: 5 p.m. Eastern Time on Tuesday, June 29, 2010.

Any person desiring to intervene or to protest in any of the above proceedings must file in accordance with Rules 211 and 214 of the Commission's Rules of Practice and Procedure (18 CFR 385.211 and 385.214) on or before 5 p.m. Eastern time on the specified comment date. It is not necessary to separately intervene again in a subdocket related to a compliance filing if you have previously intervened in the same docket. Protests will be considered by the Commission in determining the appropriate action to be taken, but will not serve to make protestants parties to the proceeding. Anyone filing a motion to intervene or protest must serve a copy of that document on the Applicant. In reference to filings initiating a new proceeding, interventions or protests submitted on or before the comment deadline need not be served on persons other than the Applicant.

As it relates to any qualifying facility filings, the notices of self-certification [or self-recertification] listed above, do not institute a proceeding regarding qualifying facility status. A notice of self-certification [or self-recertification] simply provides notification that the entity making the filing has determined the facility named in the notice meets the applicable criteria to be a qualifying facility. Intervention and/or protest do not lie in dockets that are qualifying facility self-certifications or self-recertifications. Any person seeking to challenge such qualifying facility status may do so by filing a motion pursuant to 18 CFR 292.207(d)(iii). Intervention and protests may be filed in response to notices of qualifying facility dockets other than self-certifications and self-recertifications.

The Commission encourages electronic submission of protests and interventions in lieu of paper, using the FERC Online links at *http://www.ferc.gov.* To facilitate electronic service, persons with Internet access who will eFile a document and/or be listed as a contact for an intervenor must create and validate an eRegistration account using the eRegistration link. Select the eFiling link to log on and submit the intervention or protests.

Persons unable to file electronically should submit an original and 14 copies of the intervention or protest to the Federal Energy Regulatory Commission, 888 First St., NE., Washington, DC 20426.

The filings in the above proceedings are accessible in the Commission's eLibrary system by clicking on the appropriate link in the above list. They are also available for review in the Commission's Public Reference Room in Washington, DC. There is an eSubscription link on the Web site that enables subscribers to receive e-mail notification when a document is added to a subscribed docket(s). For assistance with any FERC Online service, please e-mail *FERCOnlineSupport@ferc.gov* or call (866) 208–3676 (toll free). For TTY, call (202) 502–8659.

Nathaniel J. Davis, Sr.,

Deputy Secretary.

[FR Doc. 2010–14855 Filed 6–18–10; 8:45 am]

BILLING CODE 6717–01–P

DEPARTMENT OF ENERGY

Federal Energy Regulatory Commission

[Docket No. ER10–1425–000]

EDF Industrial Power Services (NY), LLC; Supplemental Notice That Initial Market-Based Rate Filing Includes Request for Blanket Section 204 Authorization

June 15, 2010.

This is a supplemental notice in the above-referenced proceeding of EDF Industrial Power Services (NY), LLC's application for market-based rate authority, with an accompanying rate tariff, noting that such application includes a request for blanket authorization, under 18 CFR part 34, of future issuances of securities and assumptions of liability.

Any person desiring to intervene or to protest should file with the Federal Energy Regulatory Commission, 888 First Street, NE., Washington, DC 20426, in accordance with Rules 211 and 214 of the Commission's Rules of Practice and Procedure (18 CFR 385.211 and 385.214). Anyone filing a motion to intervene or protest must serve a copy of that document on the Applicant.

Notice is hereby given that the deadline for filing protests with regard to the applicant's request for blanket authorization, under 18 CFR part 34, of future issuances of securities and assumptions of liability, is July 6, 2010.

The Commission encourages electronic submission of protests and interventions in lieu of paper, using the FERC Online links at *http://www.ferc.gov.* To facilitate electronic service, persons with Internet access who will eFile a document and/or be listed as a contact for an intervenor must create and validate an eRegistration account using the

eRegistration link. Select the eFiling link to log on and submit the intervention or protests.

Persons unable to file electronically should submit an original and 14 copies of the intervention or protest to the Federal Energy Regulatory Commission, 888 First St., NE., Washington, DC 20426.

The filings in the above-referenced proceeding are accessible in the Commission's eLibrary system by clicking on the appropriate link in the above list. They are also available for review in the Commission's Public Reference Room in Washington, DC. There is an eSubscription link on the Web site that enables subscribers to receive e-mail notification when a document is added to a subscribed docket(s). For assistance with any FERC Online service, please e-mail *FERCOnlineSupport@ferc.gov* or call (866) 208–3676 (toll free). For TTY, call (202) 502–8659.

Kimberly D. Bose,

Secretary.

[FR Doc. 2010–14955 Filed 6–18–10; 8:45 am]

BILLING CODE 6717–01–P

DEPARTMENT OF ENERGY

Federal Energy Regulatory Commission

[Docket No. ER10–1427–000]

Brookfield Energy Marketing LP; Supplemental Notice That Initial Market-Based Rate Filing Includes Request for Blanket Section 204 Authorization

June 15, 2010.

This is a supplemental notice in the above-referenced proceeding of Brookfield Energy Marketing LP's application for market-based rate authority, with an accompanying rate tariff, noting that such application includes a request for blanket authorization, under 18 CFR part 34, of future issuances of securities and assumptions of liability.

Any person desiring to intervene or to protest should file with the Federal Energy Regulatory Commission, 888 First Street, NE., Washington, DC 20426, in accordance with Rules 211 and 214 of the Commission's Rules of Practice and Procedure (18 CFR 385.211 and 385.214). Anyone filing a motion to intervene or protest must serve a copy of that document on the Applicant.

Notice is hereby given that the deadline for filing protests with regard to the applicant's request for blanket authorization, under 18 CFR part 34, of future issuances of securities and assumptions of liability, is July 6, 2010.

The Commission encourages electronic submission of protests and interventions in lieu of paper, using the FERC Online links at *http://www.ferc.gov*. To facilitate electronic service, persons with Internet access who will eFile a document and/or be listed as a contact for an intervenor must create and validate an eRegistration account using the eRegistration link. Select the eFiling link to log on and submit the intervention or protests.

Persons unable to file electronically should submit an original and 14 copies of the intervention or protest to the Federal Energy Regulatory Commission, 888 First St., NE., Washington, DC 20426.

The filings in the above-referenced proceeding are accessible in the Commission's eLibrary system by clicking on the appropriate link in the above list. They are also available for review in the Commission's Public Reference Room in Washington, DC. There is an eSubscription link on the Web site that enables subscribers to receive e-mail notification when a document is added to a subscribed docket(s). For assistance with any FERC Online service, please e-mail *FERCOnlineSupport@ferc.gov* or call (866) 208–3676 (toll free). For TTY, call (202) 502–8659.

Kimberly D. Bose,

Secretary.

[FR Doc. 2010–14954 Filed 6–18–10; 8:45 am]

BILLING CODE 6717–01–P

DEPARTMENT OF ENERGY

Federal Energy Regulatory Commission

[Docket No. ER10–1421–000]

Citizens Choice Energy, LLC; Supplemental Notice That Initial Market-Based Rate Filing Includes Request for Blanket Section 204 Authorization

June 15, 2010.

This is a supplemental notice in the above-referenced proceeding of Citizens Choice Energy, LLC's application for market-based rate authority, with an accompanying rate tariff, noting that such application includes a request for blanket authorization, under 18 CFR part 34, of future issuances of securities and assumptions of liability.

Any person desiring to intervene or to protest should file with the Federal Energy Regulatory Commission, 888 First Street, NE., Washington, DC 20426, in accordance with Rules 211 and 214 of the Commission's Rules of Practice and Procedure (18 CFR 385.211 and 385.214). Anyone filing a motion to intervene or protest must serve a copy of that document on the Applicant.

Notice is hereby given that the deadline for filing protests with regard to the applicant's request for blanket authorization, under 18 CFR part 34, of future issuances of securities and assumptions of liability, is July 6, 2010.

The Commission encourages electronic submission of protests and interventions in lieu of paper, using the FERC Online links at *http://www.ferc.gov.* To facilitate electronic service, persons with Internet access who will eFile a document and/or be listed as a contact for an intervenor must create and validate an eRegistration account using the eRegistration link. Select the eFiling link to log on and submit the intervention or protests.

Persons unable to file electronically should submit an original and 14 copies of the intervention or protest to the Federal Energy Regulatory Commission, 888 First St., NE., Washington, DC 20426.

The filings in the above-referenced proceeding are accessible in the Commission's eLibrary system by clicking on the appropriate link in the above list. They are also available for review in the Commission's Public Reference Room in Washington, DC. There is an eSubscription link on the Web site that enables subscribers to receive e-mail notification when a document is added to a subscribed docket(s). For assistance with any FERC Online service, please e-mail *FERCOnlineSupport@ferc.gov.* or call (866) 208–3676 (toll free). For TTY, call (202) 502–8659.

Kimberly D. Bose,

Secretary.

[FR Doc. 2010–14951 Filed 6–18–10; 8:45 am]

BILLING CODE 6717–01–P

DEPARTMENT OF ENERGY

Federal Energy Regulatory Commission

[Docket No. ER10–1424–000]

Eagle Industrial Power Services (IL), LLC; Supplemental Notice That Initial Market-Based Rate Filing Includes Request for Blanket Section 204 Authorization

June 15, 2010.

This is a supplemental notice in the above-referenced proceeding of Eagle Industrial Power Services (IL), LLC's application for market-based rate authority, with an accompanying rate tariff, noting that such application includes a request for blanket authorization, under 18 CFR part 34, of future issuances of securities and assumptions of liability.

Any person desiring to intervene or to protest should file with the Federal Energy Regulatory Commission, 888 First Street, NE., Washington, DC 20426, in accordance with Rules 211 and 214 of the Commission's Rules of Practice and Procedure (18 CFR 385.211 and 385.214). Anyone filing a motion to intervene or protest must serve a copy of that document on the Applicant.

Notice is hereby given that the deadline for filing protests with regard to the applicant's request for blanket authorization, under 18 CFR part 34, of future issuances of securities and assumptions of liability, is July 6, 2010.

The Commission encourages electronic submission of protests and interventions in lieu of paper, using the FERC Online links at *http://www.ferc.gov.* To facilitate electronic service, persons with Internet access who will eFile a document and/or be listed as a contact for an intervenor must create and validate an eRegistration account using the eRegistration link. Select the eFiling link to log on and submit the intervention or protests.

Persons unable to file electronically should submit an original and 14 copies of the intervention or protest to the Federal Energy Regulatory Commission, 888 First St., NE., Washington, DC 20426.

The filings in the above-referenced proceeding are accessible in the Commission's eLibrary system by clicking on the appropriate link in the above list. They are also available for review in the Commission's Public Reference Room in Washington, DC. There is an eSubscription link on the Web site that enables subscribers to receive e-mail notification when a document is added to a subscribed docket(s). For assistance with any FERC Online service, please e-mail *FERCOnlineSupport@ferc.gov* or call (866) 208–3676 (toll free). For TTY, call (202) 502–8659.

Kimberly D. Bose,

Secretary.

[FR Doc. 2010–14950 Filed 6–18–10; 8:45 am]

BILLING CODE 6717–01–P

DEPARTMENT OF ENERGY

Federal Energy Regulatory Commission

[Docket No. ER10–1291–000]

GenConn Energy LLC; Supplemental Notice That Initial Market-Based Rate Filing Includes Request for Blanket Section 204 Authorization

June 15, 2010.

This is a supplemental notice in the above-referenced proceeding of GenConn Energy LLC's application for market-based rate authority, with an accompanying rate tariff, noting that such application includes a request for blanket authorization, under 18 CFR Part 34, of future issuances of securities and assumptions of liability.

Any person desiring to intervene or to protest should file with the Federal Energy Regulatory Commission, 888 First Street, NE., Washington, DC 20426, in accordance with Rules 211 and 214 of the Commission's Rules of Practice and Procedure (18 CFR 385.211 and 385.214). Anyone filing a motion to intervene or protest must serve a copy of that document on the Applicant.

Notice is hereby given that the deadline for filing protests with regard to the applicant's request for blanket authorization, under 18 CFR part 34, of future issuances of securities and assumptions of liability, is July 6, 2010.

The Commission encourages electronic submission of protests and interventions in lieu of paper, using the FERC Online links at *http://www.ferc.gov.* To facilitate electronic service, persons with Internet access who will eFile a document and/or be listed as a contact for an intervenor must create and validate an eRegistration account using the eRegistration link. Select the eFiling link to log on and submit the intervention or protests.

Persons unable to file electronically should submit an original and 14 copies of the intervention or protest to the Federal Energy Regulatory Commission, 888 First St., NE., Washington, DC 20426.

The filings in the above-referenced proceeding are accessible in the Commission's eLibrary system by clicking on the appropriate link in the above list. They are also available for review in the Commission's Public Reference Room in Washington, DC. There is an eSubscription link on the Web site that enables subscribers to receive e-mail notification when a document is added to a subscribed docket(s). For assistance with any FERC Online service, please e-mail *FERCOnlineSupport@ferc.gov.* or call (866) 208–3676 (toll free). For TTY, call (202) 502–8659.

Kimberly D. Bose,

Secretary.

[FR Doc. 2010–14952 Filed 6–18–10; 8:45 am]

BILLING CODE 6717–01–P

DEPARTMENT OF ENERGY

Federal Energy Regulatory Commission

[Docket No. EL10–71–000]

Puget Sound Energy, Inc.; Notice of Petition for Declaratory Order

June 15, 2010.

Take notice that on June 4, 2010, pursuant to Rule 207(a)(2) of the Rules of Practice and Procedure of the Federal Energy Regulatory Commission (Commission), 18 CFR 385.207(a)(2) (2010), Puget Sound Energy, Inc. filed a Petition for Declaratory Order requesting that the Commission find that certain locational exchanges of power are not transmission transactions that may only be undertaken pursuant to an Open Access Transmission Tariff.

Any person desiring to intervene or to protest this filing must file in accordance with Rules 211 and 214 of the Commission's Rules of Practice and Procedure (18 CFR 385.211, 385.214). Protests will be considered by the Commission in determining the appropriate action to be taken, but will not serve to make protestants parties to the proceeding. Any person wishing to become a party must file a notice of intervention or motion to intervene, as appropriate. Such notices, motions, or protests must be filed on or before the comment date. On or before the comment date, it is not necessary to serve motions to intervene or protests on persons other than the Applicant.

The Commission encourages electronic submission of protests and interventions in lieu of paper using the "eFiling" link at *http://www.ferc.gov.* Persons unable to file electronically should submit an original and 14 copies

of the protest or intervention to the Federal Energy Regulatory Commission, 888 First Street, NE., Washington, DC 20426.

This filing is accessible online at *http://www.ferc.gov,* using the "eLibrary" link and is available for review in the Commission's Public Reference Room in Washington, DC. There is an "eSubscription" link on the Web site that enables subscribers to receive e-mail notification when a document is added to a subscribed docket(s). For assistance with any FERC Online service, please e-mail *FERCOnlineSupport@ferc.gov,* or call (866) 208–3676 (toll free). For TTY, call (202) 502–8659.

Comment Date: 5 p.m. Eastern Time on July 6, 2010

Kimberly D. Bose,

Secretary.

[FR Doc. 2010–14948 Filed 6–18–10; 8:45 am]

BILLING CODE 6717–01–P

DEPARTMENT OF ENERGY

Federal Energy Regulatory Commission

[Project No. 2850–014—NY]

Hampshire Paper Company; Notice Rejecting Application, Waiving Regulations, and Soliciting Applications

June 15, 2010.

On June 2, 2010, Hampshire Paper Company (Hampshire Paper), licensee for the Emeryville Hydroelectric Project No. 2850, filed an application for a new license for the project pursuant to Section 15(b)(1) of the Federal Power Act (Act). The license application was untimely filed and is hereby rejected.[1]

The project is located on the mainstem of the Oswegatchie River at approximate river mile 70 in the hamlet of Emeryville, town of Fowler, St. Lawrence County New York. The project consists of: (1) A 22-foot-high concrete gravity dam with a 185-foot-long overflow spillway equipped with 2.4-foot-high flashboards and a 4-foot-wide minimum flow rectangular weir with a minimum elevation of 584.2 feet mean sea level (msl); (2) a 35-acre reservoir with a normal water surface elevation of 586.6 feet msl; (3) a 37-foot-long by 33-foot-wide reinforced concrete intake structure equipped with four headgates connected to; (4) a 123-foot-long by 21-foot-wide steel reinforced wooden power flume equipped with a trashrack with 2-inch clear spacing connected to; (5) a 60-foot-long by 14-foot-diameter steel penstock leading to; (6) a powerhouse containing a single generating unit with a rated capacity of 3,481 kilowatts for an estimated average annual generation of 18,400 megawatt-hours; (7) an 80-foot-long, 23-kilovolt transmission line; and (8) appurtenant facilities.

As a result of the rejection of Hampshire Paper's application and pursuant to Section 16.25 of the Commission's regulations, the Commission is soliciting license applications from potential applicants. This is necessary because the deadline for filing an application for new license and any competing license applications, pursuant to Section 16.9 of the Commission's regulations was June 1, 2010, and no other applications for license for this project were filed. With this notice, we are waiving those parts of Section 16.24(a) and 16.25(a) which bar an existing licensee that missed the two-year application filing deadline from filing another application. Further, since Hampshire Paper completed the consultation requirements pursuant to Part 5 of the Integrated Licensing Process, we are waiving the consultation requirements in Section 16.8 for the existing licensee. Consequently, Hampshire Paper will be allowed to refile a license application and compete for the license and the incumbent preference established by the FPA Section 15(a)(2) will apply.[2]

The licensee is required to make available certain information described in Section 16.7 of the regulations. For more information from the licensee, please contact Mr. Michael McDonald, Facility Manager, Hampshire Paper Company, Inc., P.O. Box 339, Gouverneur, New York 13642, (315) 287–1990, or Mr. Dana Dougherty, Stantec Consulting Michigan, Inc., 3959 Research Park Drive, Ann Arbor, Michigan 48108, (734) 761–1010.

Pursuant to Section 16.25(b), a potential applicant that files a notice of intent within 90 days from the date of this notice: (1) May apply for a license under Part I of the Act and Part 4 (except Section 4.38) of the Commission's Regulations within 18 months of the date on which it files its notice; and (2) must comply with Sections 16.8 and 16.10 of the Commission's Regulations.

Questions concerning this notice should be directed to John Baummer, (202) 502–6837 or *john.baummer@ferc.gov.*

Kimberly D. Bose,

Secretary.

[FR Doc. 2010–14957 Filed 6–18–10; 8:45 am]

BILLING CODE 6717–01–P

[1] Hampshire Paper was issued a major license for the project on June 17, 1982, for a term of 30 years, effective the first day of the month in which the order was issued. 19 FERC ¶ 62,491 (1982). The license therefore expired on May 31, 2012, and the statutory deadline for filing a new license application was May 31, 2010. *See* § 15(c)(1), 16 U.S.C. 808(c)(1). Since May 31 was a legal holiday, the deadline for filing a new license application was the first business day following that day, June 1, 2010. *See* 18 CFR 385.2007 (2009).

[2] *See Pacific Gas and Electric* Co., 98 FERC ¶ 61,032 (2002), *reh'g denied,* 99 FERC ¶61,045 (2002), *aff'd, City of Fremont* v. *FERC,* 336 F.3d 910 (9th Cir. 2003).

DEPARTMENT OF ENERGY

Federal Energy Regulatory Commission

[Docket No. CP10–450–000]

Kinder Morgan Interstate Gas Transmission LLC; Notice of Request Under Blanket Authorization

June 11, 2010.

Take notice that on June 3, 2009, Kinder Morgan Interstate Gas Transmission LLC (KMIGT), filed in Docket No. CP10–450–000, a prior notice request pursuant to sections 157.205 and 157.216 of the Commission's regulations under the Natural Gas Act (NGA). KMIGT seeks authorization to abandon three 8-inch loop pipeline segments, a total of approximately 9,100 feet, along its Scott City to Phillipsburg Pipeline in Rooks County, Kansas. KMIGT proposes to perform these activities under its blanket certificate issued March 16, 1983, in Docket No. CP83–140–000, *et al.* [22 FERC ¶ 62,330 (1983)].

Specifically, KMIGT proposes to abandon by removal those three segments which loop the 12-inch Scott City to Phillipsburg Pipeline where it crosses the South Fork Solomon River. KMIGT states that these segments are operationally and functionally obsolete and that the existing 12-inch pipeline can accommodate KMIGT's shippers' existing and projected future requirements, all as more fully set forth in the application which is on file with the Commission and open to public inspection.

KMIGT states that the total cost of all facilities to be abandoned is $48,561. The current cost to replace the three segments is estimated to be $1,800,000. Therefore, KMIGT proposes to abandon by removal and sell for salvage those segments of pipe.

The filing may be viewed on the Web at *http://www.ferc.gov* using the "eLibrary" link. Enter the docket number excluding the last three digits in the

docket number field to access the document. For assistance, contact FERC at *FERCOnlineSupport@ferc.gov* or call toll-free, (886) 208–3676 or TTY, (202) 502–8659.

Any questions regarding this application may be directed to Skip George, Manager of Regulatory, Kinder Morgan Interstate Gas Transmission LLC, P.O. Box 281304, Lakewood, Colorado 80228–8304, or call (303) 914–4969.

Any person or the Commission's Staff may, within 60 days after the issuance of the instant notice by the Commission, file pursuant to Rule 214 of the Commission's Procedural Rules (18 CFR 385.214) a motion to intervene or notice of intervention and, pursuant to section 157.205 of the Commission's Regulations under the NGA (18 CFR 157.205) a protest to the request. If no protest is filed within the time allowed therefore, the proposed activity shall be deemed to be authorized effective the day after the time allowed for protest. If a protest is filed and not withdrawn within 30 days after the time allowed for filing a protest, the instant request shall be treated as an application for authorization pursuant to section 7 of the NGA.

The Commission strongly encourages electronic filings of comments, protests, and interventions via the Internet in lieu of paper. *See* 18 CFR 385.2001(a)(1)(iii) and the instructions on the Commission's Web site (*http://www.ferc.gov*) under the "e-Filing" link. Persons unable to file electronically should submit an original and 14 copies of the protest or intervention to the Federal Energy regulatory Commission, 888 First Street, NE., Washington, DC 20426.

Comment Date: 5 p.m. Eastern Standard Time August 10, 2010.

Kimberly D. Bose,

Secretary.

[FR Doc. 2010–14941 Filed 6–18–10; 8:45 am]

BILLING CODE 6717–01–P

DEPARTMENT OF ENERGY

Federal Energy Regulatory Commission

[Project No. 12642–003]

Wilkesboro Hydroelectric Company, LLC; Notice Soliciting Scoping Comments

June 15, 2010

Take notice that the following hydroelectric application has been filed with the Commission and is available for public inspection.

a. *Type of Application:* Original Major License.

b. *Project No.:* P–12642–003.

c. *Date filed:* September 29, 2009.

d. *Applicant:* Wilkesboro Hydroelectric Company, LLC.

e. *Name of Project:* W. Kerr Scott Hydropower Project.

f. *Location:* The proposed project would be located at the existing U.S. Army Corps of Engineers' (Corps) W. Kerr Scott (Kerr Scott) dam on the Yadkin River, near Wilkesboro in Wilkes County, North Carolina. A total of 3.5 acres of federal lands would be occupied by the proposed project.

g. *Filed Pursuant to:* Federal Power Act 16 U.S.C. 791(a)–825(r).

h. *Applicant Contacts:* Mr. Dean Edwards, P.O. Box 1565, Dover, FL 33527, (813) 659–3014; and Mr. Kevin Edwards, P.O. Box 143, Mayodan, NC 27027, (336) 589–6138

i. *FERC Contact:* Jennifer Adams at (202) 502–8087, or *jennifer.adams@ferc.gov.*

j. *Deadline for filing scoping comments:* 30 days from the issuance date of this notice, or July 15, 2010.

All documents may be filed electronically via the Internet. See 18 CFR 385.2001(a)(1)(iii) and the instructions on the Commission's Web site (*http://www.ferc.gov/docs-filing/ferconline.asp*), under the "eFiling" link. For a simpler method of submitting text only comments, click on "Quick Comment." For assistance, please contact FERC Online Support at *FERCOnlineSupport@ferc.gov;* call toll-free at (866) 208–3676; or, for TTY, contact (202) 502–8659. Although the Commission strongly encourages electronic filing, documents may also be paper-filed. To paper-file, mail an original and eight copies to: Kimberly D. Bose, Secretary, Federal Energy Regulatory Commission, 888 First Street, NE., Washington, DC 20426.

The Commission's Rules of Practice require all intervenors filing documents with the Commission to serve a copy of that document on each person on the official service list for the project. Further, if an intervenor files comments or documents with the Commission relating to the merits of an issue that may affect the responsibilities of a particular resource agency, they must also serve a copy of the document on that resource agency.

k. This application is not ready for environmental analysis at this time.

l. The proposed project would use the existing Kerr Scott dam, which is federally owned and administered by the U.S. Army Corps of Engineers (Corps). The proposed project would use releases from the reservoir, as directed by the Corps, that would normally be released directly to the Yadkin River downstream of the dam. All existing facilities would remain, but some features would be modified and new facilities would be constructed.

The proposed project would consist of: (1) Modifying the existing low-level intake tower to be a multilevel intake structure with trashracks; (2) placing a 580-foot-long, 11-foot-diameter steel liner in the downstream portion of the existing 749-foot-long reinforced concrete water conduit to enable pressurization of the conduit; (3) a penstock bifurcation and two 8-foot-diameter steel penstocks; (4) a gate at the end of the water conduit, with a Howell-Bunger-ring-jet-type fixed cone valve installed in the gate; (5) an 80-foot-long by 30-foot-wide powerhouse containing one 2 MW Kaplan unit and one 2 MW propeller-type unit; (6) an 80-foot-wide by 30-foot-long discharge channel that joins the Yadkin River at the downstream end of the existing stilling basin; (7) a substation; (8) a new underground 12.47-kilovolt (kV) transmission line that extends 150 feet from the proposed powerhouse to an existing utility pole to the south of the powerhouse, and an upgraded 3,600-foot-long, 12.47-kV three-phase line that connects the utility pole to a Duke Energy substation; and (9) appurtenant facilities. The Kerr Scott project would generate approximately 22,400 megawatt-hours annually.

m. A copy of the application is available for review at the Commission in the Public Reference Room, or may be viewed on the Commission's Web site at *http://www.ferc.gov,* using the "eLibrary" link. Enter the docket number, excluding the last three digits in the docket number field, to access the document. For assistance, contact FERC Online Support. A copy is available for inspection and reproduction at the address in item h above.

n. You may register online at *http://www.ferc.gov/docs-filing/esubscription.asp* to be notified via e-mail of new filings and issuances related to this or other pending projects. For assistance, contact FERC Online Support.

o. Scoping Process.

The Commission staff intends to prepare a single Environmental Assessment (EA) for the Kerr Scott Hydropower Project, in accordance with the National Environmental Policy Act. The EA will consider both site-specific and cumulative environmental impacts and reasonable alternatives to the proposed action.

Commission staff does not propose to conduct any on-site scoping meetings at

this time. Instead, we are soliciting comments, recommendations, and information on the Scoping Document (SD) issued on June 15, 2010.

Copies of the SD outlining the subject areas to be addressed in the EA were distributed to the parties on the Commission's mailing list and the applicant's distribution list. Copies of the SD may be viewed on the Web at *http://www.ferc.gov,* using the "eLibrary" link. Enter the docket number, excluding the last three digits in the docket number field, to access the document. For assistance, call 1–866–208–3676, or for TTY, (202) 502–8659.

Kimberly D. Bose,

Secretary.

[FR Doc. 2010–14947 Filed 6–18–10; 8:45 am]

BILLING CODE 6717–01–P

DEPARTMENT OF ENERGY

Federal Energy Regulatory Commission

[Docket No. AD10–14–000]

Reliability Standards Development and NERC and Regional Entity Enforcement; Notice of Technical Conference

June 15, 2010.

Take notice that the Federal Energy Regulatory Commission (Commission) will hold a Commissioner-led Technical Conference to address industry perspectives on certain issues pertaining to the development and enforcement of mandatory Reliability Standards for the Bulk-Power System. The conference will focus on the Electric Reliability Organization's (ERO) standards development process; communication and interactions between the Commission, the ERO and Regional Entities; and ERO and Regional Entity monitoring and enforcement.

This Technical Conference will be held on Tuesday, July 6, 2010, in the Commission Meeting Room (2C) at the Commission's Washington, DC headquarters, 888 First Street, NE., Washington, DC, from approximately 10 a.m. until 4 p.m. (e.d.t.). A further notice with detailed information, including the agenda, will be issued in advance of this conference. All interested parties are invited, and there is no registration list or registration fee to attend.

Commission conferences are accessible under section 508 of the Rehabilitation Act of 1973. For accessibility accommodations please send an e-mail to *accessibility@ferc.gov* or call toll free 1–866–208–3372 (voice) or 202–208–8659 (TTY), or send a fax to 202–208–2106 with the required accommodations.

Questions about this conference may be directed to:

Karin L. Larson, Office of the General Counsel—Energy Markets, Federal Energy Regulatory Commission, 888 First Street, NE., Washington, DC 20426, (202) 502–8236, *Karin.Larson@ferc.gov.*

Christopher Young, Office of Electric Reliability, Division of Reliability Standards, Federal Energy Regulatory Commission, 888 First Street, NE., Washington, DC 20426, (202) 502–6403, *Christopher.Young@ferc.gov.*

Kimberly D. Bose,

Secretary.

[FR Doc. 2010–14944 Filed 6–18–10; 8:45 am]

BILLING CODE 6717–01–P

ENVIRONMENTAL PROTECTION AGENCY

[EPA–HQ–OW–2008–0719, FRL–9164–9; EPA ICR No. 2060.04; OMB Control No. 2040–0257]

Agency Information Collection Activities; Proposed Collection; Comment Request; Information Collection Request for Cooling Water Intake Structure Phase II Existing Facilities (Renewal)

AGENCY: Environmental Protection Agency (EPA).

ACTION: Notice.

SUMMARY: In compliance with the Paperwork Reduction Act (PRA) (44 U.S.C. 3501 *et seq.*), this document announces that EPA is planning to submit a request to renew an existing approved Information Collection Request (ICR) to the Office of Management and Budget (OMB). This ICR is scheduled to expire on August 31, 2010. Before submitting the ICR to OMB for review and approval, EPA is soliciting comments on specific aspects of the information collection as described below.

DATES: Comments must be submitted on or before August 20, 2010.

ADDRESSES: Submit your comments, referencing docket ID No. EPA–HQ–OW–2008–0719, by one of the following methods:

- *http://www.regulations.gov:* Follow the online instructions for submitting comments.
- *E-mail: ow-docket@epa.gov* (Identify Docket ID No. EPA–HQ–OW–2008–0719, in the subject line).
- *Mail:* Water Docket, Environmental Protection Agency, Mailcode: 4203M, 1200 Pennsylvania Ave., NW., Washington, DC 20460. Please include a total of three copies.
- *Hand Delivery:* EPA Docket Center, EPA West, Room B102, 1301 Constitution Avenue, NW., Washington, DC. Such deliveries are only accepted during the Docket's normal hours of operation, and special arrangements should be made for deliveries of boxed information.

Instructions: Direct your comments identified by the Docket ID No. EPA–HQ–OW–2008–0719. EPA's policy is that all comments received will be included in the public docket without change and may be made available online at *http://www.regulations.gov,* including any personal information provided, unless the comment includes information claimed to be Confidential Business Information (CBI) or other information whose disclosure is restricted by statute. Do not submit information that you consider to be CBI or otherwise protected through www.regulations.gov or e-mail. The *http://www.regulations.gov* Web site is an "anonymous access" system, which means EPA will not know your identity or contact information unless you provide it in the body of your comment. If you send an e-mail comment directly to EPA without going through *http://www.regulations.gov,* your e-mail address will be automatically captured and included as part of the comment that is placed in the public docket and made available on the Internet. If you submit an electronic comment, EPA recommends that you include your name and other contact information in the body of your comment and with any disk or CD–ROM you submit. If EPA cannot read your comment due to technical difficulties and cannot contact you for clarification, EPA may not be able to consider your comment. Electronic files should avoid the use of special characters, any form of encryption, and be free of any defects or viruses. For additional information about EPA's public docket, visit the EPA Docket Center homepage at *http://www.epa.gov/epahome/dockets.htm.*

FOR FURTHER INFORMATION CONTACT: Amelia Letnes, State and Regional Branch, Water Permits Division, OWM Mail Code: 4203M, Environmental Protection Agency, 1200 Pennsylvania Ave., NW., Washington, DC 20460; *telephone number:* (202) 564–5627; *e-mail address: letnes.amelia@epa.gov.*

SUPPLEMENTARY INFORMATION:

How can I access the docket and/or submit comments?

EPA has established a public docket for the ICR identified in this document

(ID No. EPA–HQ–OW–2008–0719), which is available for online viewing at *http://www.regulations.gov,* or in person viewing at the Water Docket in the EPA Docket Center (EPA/DC), EPA West, Room B102, 1301 Constitution Ave., NW., Washington, DC. The EPA/DC Public Reading Room is open from 8 a.m. to 4:30 p.m., Monday through Friday, excluding legal holidays. The telephone number for the Reading Room is 202–566–1744, and the telephone number for the Water Docket is 202–566–2426.

Use *http://www.regulations.gov* to obtain a copy of the existing collection of information, submit or view public comments, access the index listing of the contents of the docket, and to access those documents in the public docket that are available electronically. Once in the system, select "search," then key in the docket ID number identified in this document.

What information is EPA particularly interested in?

Pursuant to section 3506(c)(2)(A) of the PRA, EPA specifically solicits comments and information to enable it to:

(i) Evaluate whether the collection of information is necessary for the proper performance of the functions of the Agency, including whether the information will have practical utility;

(ii) Evaluate the accuracy of the Agency's estimate of the burden of the collection of information, including the validity of the methodology and assumptions used;

(iii) Enhance the quality, utility, and clarity of the information to be collected; and

(iv) Minimize the burden of the collection of information on those who are to respond, including through the use of appropriate automated electronic, mechanical, or other technological collection techniques or other forms of information technology, e.g., permitting electronic submission of responses. In particular, EPA is requesting comments from very small businesses (those that employ less than 25) on examples of specific additional efforts that EPA could make to reduce the paperwork burden for very small businesses affected by this collection.

What should I consider when I prepare my comments for EPA?

You may find the following suggestions helpful for preparing your comments:

1. Explain your views as clearly as possible and provide specific examples.
2. Describe any assumptions that you used.
3. Provide copies of technical information/data you used that support your views.
4. If you estimate potential burden or costs, explain how you arrived at the estimate that you provide.
5. Offer alternative ways to improve the collection activity.
6. Make sure to submit your comments by the deadline identified under **DATES.**
7. To ensure proper receipt by EPA, be sure to identify the docket ID number assigned to this action in the subject line on the first page of your response. You may also provide the name, date, and **Federal Register** citation.

What information collection activity or ICR does this apply to?

Affected Entities: Entities potentially affected by this action include existing electric power generating facilities meeting the applicability criteria of the 316(b) Phase II Existing Facility rule at 40 CFR 125.91.

Title: Information Collection Request for Cooling Water Intake Structure Phase II Existing Facilities (Renewal)

ICR Numbers: EPA ICR No. 2060.04, OMB Control No. 2040–0257.

ICR Status: This ICR is currently scheduled to expire on August 31, 2010. An Agency may not conduct or sponsor, and a person is not required to respond to, a collection of information, unless it displays a currently valid OMB control number. The OMB control numbers for EPA's regulations in title 40 of the CFR, after appearing in the **Federal Register** when approved, are listed in 40 CFR Part 9, and displayed either by publication in the **Federal Register** or by other appropriate means, such as on the related collection instrument or form, if applicable. The display of OMB control numbers in certain EPA regulations is consolidated in 40 CFR Part 9.

Abstract: The section 316(b) Phase II Existing Facility rule requires the collection of information from existing point source facilities that generate and transmit electric power (as a primary activity) or generate electric power but sell it to another entity for transmission, use a cooling water intake structure (CWIS) that uses at least 25 percent of the water it withdraws from waters of the U.S. for cooling purposes, and have a design intake flow of 50 million gallons per day (MGD) or more. Section 316(b) of the Clean Water Act (CWA) requires that any standard established under section 301 or 306 of the CWA and applicable to a point source must require that the location, design, construction and capacity of CWISs at that facility reflect the best technology available (BTA) for minimizing adverse environmental impact. Such impact occurs as a result of impingement (where fish and other aquatic life are trapped on technologies at the entrance to CWIS) and entrainment (where aquatic organisms, eggs, and larvae are taken into the cooling system, passed through the heat exchanger, and then pumped back out with the discharge from the facility). The 316(b) Phase II rule establishes requirements applicable to the location, design, construction, and capacity of CWISs at Phase II existing facilities. These requirements establish the BTA for minimizing adverse environmental impact associated with the use of CWISs.

The 316(b) Phase II rule was signed on February 16, 2004. Industry and environmental groups, and a number of States filed legal challenges to the rule. Several issues were heard by the Second Circuit's Court of Appeals, which issued a decision on January 25, 2007 remanding portions of the rule (*see Riverkeeper, Inc.* v. *U.S. EPA,* No. 04–6692–ag(L) [2d Cir. Jan. 25, 2007]). Industry groups also petitioned the Supreme Court on several issues, which issued a decision on April 1, 2009. (*Entergy Corp.* v. *Riverkeeper, Inc.,* No. 07–588). EPA subsequently suspended the 316(b) Phase II rule on July 9, 2007 and is currently in the process of developing a revised rule for existing facilities. However, permitting authorities are still required under section 301 of the CWA to establish BTA permit limits using best professional judgment. The existing Phase II rule provides a framework for the type of information a permit authority needs to establish appropriate BTA limits for CWISs. This ICR does not address the results of court decisions or any proposed regulation.

Burden Statement: The annual average reporting and record keeping burden for the collection of information by facilities responding to the Section 316(b) Phase II Existing Facility rule is estimated to be 2,071 hours per respondent (*i.e.,* an annual average of 977,293 hours of burden divided among an anticipated annual average of 472 facilities). The State Director reporting and record keeping burden for the review, oversight, and administration of the rule is estimated to average 1,101 hours per respondent (i.e., an annual average of 46,228 hours of burden divided among an anticipated 42 States on average per year). Burden means the total time, effort, or financial resources expended by persons to generate, maintain, or disclose or provide information to or for a Federal agency. This includes the time needed to review

instructions; develop, acquire, install, and use technology and systems for the purposes of collecting, validating, and verifying information, processing and maintaining information, and disclosing and providing information; adjust the existing ways to comply with any previously applicable instructions and requirements; train personnel to be able to respond to a collection of information; search data sources; complete and review the collection of information; and transmit or otherwise disclose information.

The ICR provides a detailed explanation of the Agency's estimate for the existing ICR, which is only briefly summarized here:

Estimated total number of potential respondents: 548 (506 facilities and 42 States).

Frequency of response: Bi-annually, every five years.

Estimated total average number of responses for each respondent: 9.

Estimated total annual burden hours: 1,023,521 hours.

Estimated total annual costs: $74,199,667. This includes an estimated burden cost of $64,224,198 and an estimated cost of $9,975,469 for capital investment or maintenance and operational costs.

Changes in the Estimates: The change in burden results mainly from the shift from the approval period to the renewal period of the 316(b) Phase II Existing Facilities rule. The currently approved ICR (EPA ICR No. 2060.03) covers the last 2 years of the permit approval period (*i.e.,* years 4 and 5 after implementation) and the first year of the renewal period (*i.e.,* year 6 after implementation). This proposed ICR covers renewal of permits only (years 7 to 9 after implementation). Activities for renewing an NPDES permit already issued under the 316(b) Phase II Existing Facilities rule are less burdensome than those for issuing a permit for the first time.

What is the next step in the process for this ICR?

EPA will consider the comments received and amend the ICR as appropriate. The final ICR package will then be submitted to OMB for review and approval pursuant to 5 CFR 1320.12. At that time, EPA will issue another **Federal Register** notice pursuant to 5 CFR 1320.5(a)(1)(iv) to announce the submission of the ICR to OMB and the opportunity to submit additional comments to OMB. If you have any questions about this ICR or the approval process, please contact the technical person listed under **FOR FURTHER INFORMATION CONTACT**.

Dated: June 14, 2010.

James A. Hanlon,

Director, Office of Wastewater Management.

[FR Doc. 2010–14917 Filed 6–18–10; 8:45 am]

BILLING CODE 6560–50–P

ENVIRONMENTAL PROTECTION AGENCY

[FRL–9164–8]

Informational Public Meetings for Hydraulic Fracturing Research Study

AGENCY: Environmental Protection Agency (EPA).

ACTION: Notice.

SUMMARY: The Environmental Protection Agency (EPA or Agency) is announcing four (4) public informational meetings to explain its proposed plan to study the relationship between hydraulic fracturing and drinking water. The meetings are open to all interested parties and will be held in Fort Worth, Texas; Denver, Colorado; Canonsburg, Pennsylvania; and Binghamton, New York. EPA will provide the public with information about the Agency's preliminary plans for study scope and design, and EPA will receive public comments on the preliminary plans during the meetings.

DATES: The Hydraulic Fracturing Study informational meetings are as follows: July 8, 2010, from 6 p.m. to 10 p.m., c.d.t., in Fort Worth Texas; July 13, 2010, from 6 p.m. to 10 p.m., m.d.t., in Denver, Colorado; July 22, 2010, from 6 p.m. to 10 p.m., e.d.t. in Canonsburg, Pennsylvania; and three (3) meetings on August 12, 2010, from 8 a.m. to 12 p.m., 1 p.m. to 5 p.m., and 6 p.m. to 10 p.m., e.d.t., in Binghamton, New York.

Stakeholders are requested to pre-register for the meetings at least 72 hours before each meeting at the following Web site: *http://hfmeeting.cadmusweb.com.*

FOR FURTHER INFORMATION CONTACT: Jill Dean, Office of Groundwater and Drinking Water, Environmental Protection Agency, 1200 Pennsylvania Ave., NW., Mailcode 4606M, Washington, DC 20460; *telephone number:* 202–564–8241; *e-mail address: dean.jill@epa.gov.*

ADDRESSES: The Hydraulic Fracturing Study informational meetings will be held as follows: On July 8, 2010, at the Hilton Fort Worth in Fort Worth, Texas; on July 13, 2010, at the Marriot Tech Center's Rocky Mountain Events Center in Denver, Colorado; on July 22, 2010, at the Hilton Garden Inn in Canonsburg, PA; and on August 12, 2010, at the Anderson Performing Arts Center at Binghamton University in Binghamton, New York. More specific information regarding the public meetings such as addresses for the meeting locations and agendas will be provided on the EPA Hydraulic Fracturing Web site at *http://www.epa.gov/safewater/_safewater/uic/wells_hydrofrac.html.*

SUPPLEMENTARY INFORMATION: EPA is hosting four (4) informational meetings related to the Agency's proposed Hydraulic Fracturing Research Study. The meetings are open to the public and all interested stakeholders are invited to attend. Presentations by EPA will be limited to study planning and will not include discussions on hydraulic fracturing policy or past EPA studies.

Persons wishing to contribute comments to EPA regarding the proposed Hydraulic Fracturing Research Study may: (1) Present oral comments at the informational meeting; (2) submit written comments at the informational meeting; (3) send written comments to EPA using the contact information listed in the **FOR FURTHER INFORMATION CONTACT** section; or (4) submit electronic comments to EPA at *hydraulic.fracturing@epa.gov.*

The meetings will begin with brief presentations by the EPA Office of Research and Development on hydraulic fracturing, potential study plan components, and proposed criteria for selecting case study locations. The oral comment session will begin after the presentations, and oral comments will be limited to two (2) minutes each. Written comments may be sent to *hydraulic.fracturing@epa.gov* up to fourteen (14) days after each meeting. Information on hydraulic fracturing, updates on the Study progress, and stakeholder engagement events will be posted to the following EPA Web site: *http://www.epa.gov/safewater/uic/wells_hydrofrac.html.*

Stakeholders interested in attending the meetings are invited to pre-register at the following Web site: *http://hfmeeting.cadmusweb.com,* at least three (3) days in advance. Pre-registering for the meeting will allow EPA to improve meeting planning. Registered attendees requesting to make an oral presentation will be placed on the commenting schedule and receive a time slot in which to give comments. Time slots are limited and will be filled on a first come first served basis.

Special Accommodations: Any person needing special accommodations at the public meetings, including wheelchair access or sign language translator, should contact Jill Dean by phone at (202) 564–8241, by e-mail at *dean.jill@epa.gov* or by mail at: Jill

Dean, U.S. Environmental Protection Agency, Mail Code 4606M, 1200 Pennsylvania Ave., NW., Washington, DC 20460. Requests for special accommodations should be made at least five business days in advance of the meeting.

Dated: June 15, 2010.

Cynthia C. Dougherty,

Director, Office of Groundwater and Drinking Water.

[FR Doc. 2010–14897 Filed 6–18–10; 8:45 am]

BILLING CODE 6560–50–P

ENVIRONMENTAL PROTECTION AGENCY

[FRL–9164–2]

North Carolina Waters Along the Entire Length of Brunswick and Pender Counties and the Saline Waters of the Cape Fear River in Brunswick and New Hanover Counties No Discharge Zone Determination

The Environmental Protection Agency (EPA), Region 4, concurs with the determination of the North Carolina Department of Environment and Natural Resources (DENR), Division of Water Quality (DWQ), that adequate and reasonably available pumpout facilities exist for the designation of Brunswick and Pender Counties Coastal Waters as a No Discharge Zone (NDZ). Specifically, these waters include all the tidal salt waters extending 3 nautical miles (nm) into the Atlantic Ocean along the entire length of Brunswick and Pender Counties, and the saline waters of the Cape Fear River in Brunswick and New Hanover Counties. The other saline waters of New Hanover County have already been designated as a NDZ.

The geographic description including latitudes and longitudes are as follows: Northern Border of Pender County with Onslow County (34°27′23.9″ N 77°32.4′.859″ W), southwest along the mainland coast, to include all named and unnamed creeks, the Atlantic Intracoastal Waterway, Cape Fear River (up to Toomers Creek 34°15′36.61″ N 77°58′56.03″ W), Brunswick River, and Northeast Cape Fear River (up to Ness Creek 34°17′7.10″ N 77°57′17.70″ W), to the intersection of the Western tip of Brunswick County and South Carolina, 3 nm into the Atlantic Ocean (33°48′32.903″ N 78°30′33.675″ W) to include all the U.S. Territorial Sea extending 3 nm from South Carolina to a point 3 nm into the Atlantic Ocean (34°24′30.972″ N 78°28′18.903″ W) to the Pender/Onslow County Line.

This petition was filed pursuant to the Clean Water Act, Section 312(f)(3), Public Law 92–500 as amended by Public Law 95–217 and Public Law 100–4. A NDZ is defined as a body of water in which the discharge of vessel sewage, both treated and untreated, is prohibited. Section 312(f)(3) states:

After the effective date of the initial standards and regulations promulgated under this section, if any State determines that the protection and enhancement of the quality of some or all of the waters within such States require greater environmental protection, such State may completely prohibit the discharge from all vessels of any sewage, whether treated or not, into such waters, except that no such prohibition shall apply until the Administrator determines that adequate facilities for the safe and sanitary removal and treatment of sewage from all vessels are reasonably available for such water to which such prohibition would apply.

According to DENR DWQ the following facilities are located in Brunswick, Pender, and New Hanover Counties for pumping out vessel holding tanks:

(1) St. James Plantation Marina, 910–253–0463, 8 a.m.–5 p.m. M–F, 7′ draft at mean low tide

(2) South Harbor Village Marina, 910–454–7486, 7 a.m.–7 p.m. Summers, varies off season, 10′–15′ draft at mean low tide

(3) Southport Marina Inc., 910–457–9900, Sunrise to Sunset, 6′ draft at mean low tide

(4) Bald Head Island Marina, 910–457–7380, 9 a.m.–5 p.m. M–F 9 a.m.–6 p.m. Saturday 8 a.m.–6 p.m. Sunday, 8′ draft at mean low tide

(5) Mona Black Marina, 910–458–0575, Flexible–open year round, 4′ draft at mean low tide

(6) Waterfront Village & Yacht Club, 910–458–7400, call ahead, 5.5′ draft at mean low tide

(7) Carolina Beach State Park, 910–458–7770, May–August 8 a.m.–5 p.m. March, April, September, October 8 a.m.–7 p.m., 8′ draft at mean low tide

(8) Joyner Marina, 910–458–5053, Winter and Weekdays 8 a.m.–5 p.m. Summer and Weekends 7 a.m.–7 p.m., 5.5′ draft at mean low tide

(9) Watermark Marina of Wilmington, 910–794–5259, 10 a.m.–6 p.m. Monday–Saturday, 7′ draft at mean low tide

(10) Wilmington Marine Center, 910–395–5055, 8 a.m.–5 p.m. Seasonal, 7′ draft at mean low tide

(11) Cape Fear Marina, 910–772–9277, 8 a.m.–5 p.m. Monday–Friday Weekends by appointment only, 8′ draft at mean low tide

(12) Wrightsville Beach Marina/Trans Dock, 910–256–6666, 8 a.m.–7:30 p.m. Monday–Friday, 13′–18′ draft at mean low tide

(13) Seapath Yacht Club, 910–256–3747, 7 a.m.–7 p.m., 10′–12′ draft at mean low tide

(14) Harbour Village Marina, 910–270–2994, 7 a.m.–4 p.m., 10′ draft at mean low tide

(15) Beach House Marina, 910–328–2628, 8 a.m.–6 p.m., 7.5′ draft at mean low tide

Marinas outside of the propose NDZ, but within 5 nm:

(1) Coquina Harbor Marina, 843–249–5376, 8 a.m.–6 p.m., 9′–13′ draft at mean low tide

(2) Cricket Cove Marina, 843–249–7169, 8 a.m.–Sunset, 9′ draft at mean low tide

(3) Anchor Marina, 843–249–7899, 8 a.m.–5 p.m., 5′ draft at mean low tide

(4) Doc Holidays Marina, 843–280–6354, 8 a.m.–6 or 8 p.m. depending on season, 8′ draft at mean low tide

The total vessel population for these three counties (2009 data) is 28,400. This number reflects active vessel registrations and was obtained from the North Carolina Wildlife Resources Commission (inactive registrations were not included in these figures). It is recognized that only a small percent of the vessels in the coastal waters of Brunswick and Pender Counties are equipped with a Marine Sanitation Device (MSD). To estimate the number of MSDs in use, percentages obtained from EPA Region 2 were applied and are as follows:

Boat Length < 16′	8.3% with MSDs.
Boat Length 16′–25′	10.6% with MSDs.
Boat Length 26′–40′	78.5% with MSDs.
Boat Length > 40′	82.6% with MSDs.

In applying these percentages an estimated 3,888 MSDs are in use by registered boats within the proposed NDZ.

According to the New Hanover County NDZ Application submitted to EPA, the number of transient boats serviced by marinas in New Hanover County was calculated to be approximately 180 per month. Assuming similar numbers of transient boats for Brunswick and Pender Counties, the total number of transient boats for Brunswick, Pender, and New Hanover Counties would be 540. Using the figures for both county and transient boats, the total number of MSDs in these waters is estimated to be 4,335. There are 15 marinas within this area, and this

yields a ratio of about 289 boats per pumpout facility. This figure does not include the 4 marinas that are located within 5 nm of this proposed NDZ area.

All vessel pumpout facilities that are described either discharge into State approved and regulated septic tanks or State approved on site waste treatment plant, or the waste is collected into a large holding tank for transport to a sewage treatment plant. Thus all vessel sewage will be treated to meet existing standards for secondary treatment.

Comments regarding this proposed action should be addressed to Tony Able, Chief, Coastal Section, EPA Region 4, Water Protection Division, 61 Forsyth Street, Atlanta, Georgia 30303–3104. Comments regarding this proposed action will be accepted until 30 days from the date of this publication in the **Federal Register**.

Beverly H. Banister,

Acting Regional Administrator, Region 4.

Memorandum

SUBJECT: Adequate and Reasonably Available Pumpout Facility Determination for North Carolina Waters Along the Entire Length of Brunswick and Pender Counties and the Saline Waters of the Cape Fear River in Brunswick and New Hanover Counties No Discharge Zone Determination

FROM: James D. Giattina, Director, Water Protection Division

TO: A. Stanley Meiburg, Acting Regional Administrator

EPA Region 4 received a petition from North Carolina Department of Environment and Natural Resources (NCDENR), Division of Water Quality, requesting concurrence with its determination that there are adequate and reasonably available pumpout facilities for emptying marine sanitation device holding tanks for North Carolina Waters along the entire length of Brunswick and Pender Counties and the saline waters of the Cape Fear River in Brunswick and New Hanover Counties.

All three counties (Brunswick, Pender and New Hanover) passed resolutions to petition for the establishment of a No Discharge Zone for their respective jurisdictions. Three members of the North Carolina General Assembly have also written in support for the designation of NDZ. This designation must be made before a State or local government can enforce a No Discharge Zone in waters where there is or may be interstate commerce. The establishment and enforcement of this action is the responsibility of the State as indicated in Section 312 of the Clean Water Act.

I recommend that EPA concur with this request, and proceed with the Federal Register process for noticing EPA's final determination.

Section 312 of the Clean Water Act provides the authority for this action, which has been delegated to the Regional Administrator. Your approval and signature are requested.

If you need further information, please call me or Drew Kendall of my staff at 2–9394.

Attachments:

No Discharge Zone Federal Register Notice

Federal Register Publication Interim Cover Sheet

Federal Typesetting Request Form and Accounting Information

[FR Doc. 2010–14907 Filed 6–18–10; 8:45 am]

BILLING CODE 6560–50–P

ENVIRONMENTAL PROTECTION AGENCY

[FRL–9165–1]

Clean Air Act Advisory Committee (CAAAC); Request for Nominations for 2010 Clean Air Excellence Awards Program

AGENCY: Environmental Protection Agency (EPA).

ACTION: Request for nominations for Clean Air Excellence Awards.

SUMMARY: EPA established the Clean Air Excellence Awards Program in February 2000. This is an annual awards program to recognize outstanding and innovative efforts that support progress in achieving clean air. This notice announces the competition for the Year 2010 program.

DATES: All submissions of entries for the Clean Air Excellence Awards Program must be postmarked by August 13, 2010.

FOR FURTHER INFORMATION CONTACT: Concerning the Clean Air Excellence Awards Program please use the CAAAC Web site and click on awards program or contact Mr. Pat Childers, U.S. EPA at 202–564–1082 or 202–564–1352 (Fax), mailing address: Office of Air and Radiation (6102A), 1200 Pennsylvania Avenue, NW., Washington, DC 20004.

SUPPLEMENTARY INFORMATION: *Awards Program Notice:* Pursuant to 42 U.S.C. 7403(a)(1) and (2) and sections 103(a)(1) and (2) of the Clean Air Act (CAA), notice is hereby given that the EPA's Office of Air and Radiation (OAR) announces the opening of competition for the Year 2010 "Clean Air Excellence Awards Program" (CAEAP). The intent of the program is to recognize and honor outstanding, innovative efforts that help to make progress in achieving cleaner air. The CAEAP is open to both public and private entities. Entries are limited to the United States. There are five general award categories: (1) Clean Air Technology; (2) Community Action; (3) Education/Outreach; (4) Regulatory/Policy Innovations; (5) Transportation Efficiency Innovations; and two special awards categories: (1) Thomas W. Zosel Outstanding Individual Achievement Award. (2) Gregg Cooke Visionary Program Award. Awards are given on an annual basis and are for recognition only.

Entry Requirements: All applicants are asked to submit their entry on a CAEAP entry form, contained in the CAEAP Entry Package, which may be obtained from the Clean Air Act Advisory Committee (CAAAC) Web site at *http://www.epa.gov/oar/caaac* by clicking on Awards Program or by contacting Mr. Pat Childers, U.S. EPA at 202–564–1082 or 202–564–1352 Fax, mailing address: Office of Air and Radiation (6102A), 1200 Pennsylvania Avenue, NW., Washington, DC 20004. The entry form is a simple, three-part form asking for general information on the applicant and the proposed entry; asking for a description of why the entry is deserving of an award; and requiring information from three (3) independent references for the proposed entry. Applicants should also submit the entry form electronically (cd preferred) and additional supporting documentation as necessary. Specific directions and information on filing an entry form are included in the Entry Package.

Judging and Award Criteria: Judging will be accomplished through a screening process conducted by EPA staff, with input from outside subject experts, as needed. Members of the CAAAC will provide advice to EPA on the entries. The final award decisions will be made by the EPA Assistant Administrator for Air and Radiation. Entries will be judged using both general criteria and criteria specific to each individual category. There are four (4) general criteria: (1) The entry directly or indirectly (*i.e.,* by encouraging actions) reduces emissions of criteria pollutants or hazardous/toxic air pollutants; (2) The entry demonstrates innovation and uniqueness; (3) The entry provides a model for others to follow (*i.e.,* it is replicable); and (4) The positive outcomes from the entry are continuing/sustainable. Although not required to win an award, the following general criteria will also be considered in the judging process: (1) The entry has positive effects on other environmental media in addition to air; (2) The entry Demonstrates effective collaboration and partnerships; and (3) The individual or organization submitting the entry has effectively measured/evaluated the outcomes of the project, program, technology, *etc.* As previously mentioned, additional criteria will be used for each individual award category. These criteria are listed in the 2010 Entry Package.

Dated: June 15, 2010.

Patrick Childers,

Designated Federal Official for Clean Air Act Advisory Committee.

[FR Doc. 2010–14914 Filed 6–18–10; 8:45 am]

BILLING CODE 6560–50–P

ENVIRONMENTAL PROTECTION AGENCY

[FRL–9165–4]

Science Advisory Board Staff Office Request for Nominations of Experts for a Nutrient Criteria Review Panel

AGENCY: Environmental Protection Agency (EPA).

ACTION: Notice of request for nominations.

SUMMARY: The Science Advisory Board (SAB) Staff Office is requesting public nominations of experts to form an SAB panel to review EPA's technical support document on development of numeric nutrient criteria for Florida's estuarine and coastal waters, and southern canals.

DATES: Nominations should be submitted by July 12, 2010 per instructions below.

FOR FURTHER INFORMATION CONTACT: Any member of the public wishing further information regarding this Request for Nominations may contact Ms. Stephanie Sanzone, Designated Federal Officer (DFO), EPA Science Advisory Board (1400F), 1200 Pennsylvania Avenue, NW., Washington, DC 20460; via telephone/voice mail (202) 343–9697; by fax at (202) 233–0643; or via e-mail at *sanzone.stephanie@epa.gov.* General information concerning the EPA Science Advisory Board can be found on the EPA SAB Web site at *http://www.epa.gov/sab.*

SUPPLEMENTARY INFORMATION:

The SAB was established by 42 U.S.C. 4365 to provide independent scientific and technical advice, consultation and recommendations to the EPA Administrator on the technical basis for Agency positions and regulations. The SAB Staff Office is forming an expert panel to review a draft technical support document (TSD) being developed by the Office of Water (OW). The draft TSD will describe methods and approaches for developing numeric nutrient criteria for Florida's estuarine and coastal waters, downstream protection values in streams to protect those waters, and criteria for flowing waters in the south Florida region (including canals). The Nutrient Criteria Review Panel will be asked to review and comment on the scientific validity of the Agency's draft TSD. The SAB panel will comply with the provisions of the Federal Advisory Committee Act (FACA) and all appropriate SAB procedural policies. Upon completion, the panel's report will be submitted to the chartered SAB for final approval for transmittal to the EPA Administrator.

Availability of the review materials: The EPA draft technical support document will be posted on the SAB Web site at *http://yosemite.epa.gov/sab/sabproduct.nsf/fedrgstr_activites/FL%20Estuaries%20TSD?OpenDocument.* For questions concerning the review materials, please contact Elizabeth Behl, at (202) 566–0788, or *behl.betsy@epa.gov.*

Request for nominations: The SAB Staff Office is requesting nominations of nationally and internationally recognized scientists with specialized expertise and research or management experience in: Assessing nutrient effects in freshwater, estuarine and coastal ecosystems; ecosystem dynamics; hydrodynamic modeling; and numerical approaches for deriving nutrient criteria for the protection of aquatic life. The specialized expertise and experience may be in one or more of the following disciplines: Biology; chemistry; biogeochemistry; ecology; limnology; oceanography; modeling; and statistics.

Process and deadline for submitting nominations: Any interested person or organization may nominate qualified individuals for possible service on the Nutrient Criteria Review Panel in the areas of expertise described above. Nominations should be submitted in electronic format (which is preferred over hard copy) following the instructions for "Nominating Experts to Advisory Panels and Ad Hoc Committees Being Formed" provided on the SAB Web site. The instructions can be accessed through the "Nomination of Experts" link on the blue navigational bar on the SAB Web site at *http://www.epa.gov/sab.* To receive full consideration, nominations should include all of the information requested.

EPA's SAB Staff Office requests: Contact information about the person making the nomination; contact information about the nominee; the disciplinary and specific areas of expertise of the nominee; the nominee's curriculum vita; sources of recent grants and/or contracts; and a biographical sketch of the nominee indicating current position, educational background, research activities, and recent service on other national advisory committees or national professional organizations.

Persons having questions about the nomination procedures, or who are unable to submit nominations through the SAB Web site, should contact Ms. Sanzone, DFO, as indicated above in this notice. Nominations should be submitted in time to arrive no later than July 12, 2010. EPA values and welcomes diversity. In an effort to obtain nominations of diverse candidates, EPA encourages nominations of women and men of all racial and ethnic groups.

The EPA SAB Staff Office will acknowledge receipt of nominations. The names and biosketches of qualified nominees identified by respondents to the **Federal Register** notice and additional experts identified by the SAB Staff will be posted on the SAB Web site at *http://www.epa.gov/sab.* Public comments on this List of Candidates will be accepted for 21 calendar days. The public will be requested to provide relevant information or other documentation on nominees that the SAB Staff Office should consider in evaluating candidates.

For the EPA SAB Staff Office, a balanced subcommittee or review panel includes candidates who possess the necessary domains of knowledge, the relevant scientific perspectives (which, among other factors, may be influenced by work history and affiliation), and the collective breadth of experience to adequately address the charge. In establishing the Nutrient Criteria Review Panel, the SAB Staff Office will consider public comments on the list of candidates, information provided by the candidates themselves, and background information independently gathered by the SAB Staff Office. Selection criteria to be used for panel membership include: (a) Scientific and/or technical expertise, knowledge and experience (primary factors); (b) availability and willingness to serve; (c) absence of financial conflicts of interest; (d) absence of an appearance of a lack of impartiality; (e) skills working in advisory committees and panels for the Panel as a whole, and (f) diversity of and balance among scientific expertise and viewpoints.

The SAB Staff Office's evaluation of an absence of financial conflicts of interest will include a review of the "Confidential Financial Disclosure Form for Special Government Employees Serving on Federal Advisory Committees at the U.S. Environmental Protection Agency" (EPA Form 3110–48). This confidential form allows Government officials to determine whether there is a statutory conflict between that person's public responsibilities (which includes membership on an EPA Federal advisory committee) and private interests and activities, or the appearance of a lack of impartiality, as defined by Federal regulation. The form

may be viewed and downloaded from the following URL address *http://www.epa.gov/sab/pdf/epaform3110-48.pdf.*

The approved policy under which the EPA SAB Office selects subcommittees and review panels is described in the following document: "Overview of the Panel Formation Process at the Environmental Protection Agency Science Advisory Board" (EPA–SAB–EC–02–010), which is posted on the SAB Web site at *http://www.epa.gov/sab/pdf/ec02010.pdf.*

Dated: June 14, 2010.

Anthony Maciorowski,

Deputy Director, EPA Science Advisory Board Staff Office.

[FR Doc. 2010–14890 Filed 6–18–10; 8:45 am]

BILLING CODE 6560–50–P

FEDERAL COMMUNICATIONS COMMISSION

Notice of Public Information Collection Being Reviewed by the Federal Communications Commission for Extension Under Delegated Authority, Comments Requested

June 15, 2010.

SUMMARY: The Federal Communications Commission, as part of its continuing effort to reduce paperwork burden invites the general public and other Federal agencies to take this opportunity to comment on the following information collection, as required by the Paperwork Reduction Act (PRA) of 1995, 44 U.S.C. 3501 – 3520. Comments are requested concerning: (a) whether the proposed collection of information is necessary for the proper performance of the functions of the Commission, including whether the information shall have practical utility; (b) the accuracy of the Commission's burden estimate; (c) ways to enhance the quality, utility, and clarity of the information collected; (d) ways to minimize the burden of the collection of information on the respondents, including the use of automated collection techniques or other forms of information technology, and (e) ways to further reduce the information collection burden for small business concerns with fewer than 25 employees.

The FCC may not conduct or sponsor a collection of information unless it displays a currently valid control number. No person shall be subject to any penalty for failing to comply with a collection of information subject to the Paperwork Reduction Act (PRA) that does not display a currently valid OMB control number.

DATES: Written Paperwork Reduction Act (PRA) comments should be submitted on or before August 20, 2010. If you anticipate that you will be submitting PRA comments, but find it difficult to do so within the period of time allowed by this notice, you should advise the FCC contact listed below as soon as possible.

ADDRESSES: Direct all PRA comments to Nicholas A. Fraser, Office of Management and Budget, via fax at 202–395–5167 or via email to Nicholas_A._Fraser@omb.eop.gov and to the Federal Communications Commission via email to PRA@fcc.gov and Cathy.Williams@fcc.gov.

FOR FURTHER INFORMATION CONTACT: For additional information, contact Cathy Williams on (202) 418–2918.

SUPPLEMENTARY INFORMATION:

OMB Number: 3060–0171.

Title: Section 73.1125, Station Main Studio Location.

Form Number: N/A.

Type of Review: Extension of a currently approved collection.

Respondents: Business or other for–profit entities.

Number of Respondents and Responses: 72 respondents and 72 responses.

Estimated Hours per Response: 0.5 to 2 hours.

Frequency of Response: On occasion reporting requirement.

Total Annual Burden: 135 hours.

Annual Burden Cost: $111,870.

Privacy Impact Assessment: No impact(s).

Obligation to Respond: Required to obtain or retain benefits. The statutory authority for this collection is contained in Sections 154(i) and 307(b) of the Communications Act of 1934, as amended.

Nature and Extent of Confidentiality: Confidentiality is not needed for this collection of information.

Needs and Uses: 47 CFR 73.1125(d)(1) requires AM, FM or TV licensees to notify the Commission when the main studio is relocated and from a point outside the locations specified in Section 73.1125(a) or (c) to one within those locations.

47 CFR 73.1125(d)(2) requires licensees to receive written authority to locate a main studio outside the locations specified in paragraph (a) or (c) of this section for the first time must be obtained from the Audio Division, Media Bureau for AM and FM stations, or the Video Division for TV and Class A television stations before the studio may be moved to that location. Where the main studio is already authorized at a location outside those specified in paragraph (a) or (c) of this section, and the licensee or permittee desires to specify a new location also located outside those locations, written authority must also be received from the Commission prior to the relocation of the main studio. Authority for these changes may be requested by filing a letter with an explanation of the proposed changes with the appropriate division. Licensees or permittees should also be aware that the filing of such a letter request does not imply approval of the relocation request, because each request is addressed on a case–by–case basis. A filing fee is required for commercial AM, FM, TV or Class A TV licensees or permittees filing a letter request under the section.

Federal Communications Commission.

Marlene H. Dortch,

Secretary,

Office of the Secretary,

Office of Managing Director.

[FR Doc. 2010–14878 Filed 6–18–10 8:45 am]

BILLING CODE 6712–01–S

FEDERAL COMMUNICATIONS COMMISSION

Notice of Public Information Collection Approved By the Office of Management and Budget

June 16, 2010.

SUMMARY: The Federal Communications Commission (FCC) has received the Office of Management and Budget (OMB) approval for the following public information collections pursuant to the Paperwork Reduction Act of 1995 (44 U.S.C. 3501–3520). An agency may not conduct or sponsor a collection of information unless it displays a currently valid OMB control number, and no person is required to respond to, a collection of information unless it displays a currently valid control number.

FOR FURTHER INFORMATION CONTACT: Cathy Williams on (202) 418–2918 or send an email to Cathy.Williams@fcc.gov.

SUPPLEMENTARY INFORMATION:

OMB Control Number: 3060–1034.

OMB Approval Date: June 14, 2010.

OMB Expiration Date: June 30, 2013.

Title: Digital Audio Broadcasting Systems and their Impact on the Terrestrial Radio Broadcast Service; Digital Notification Form, FCC Form 335.

Form Number: FCC Form 335.

Number of Respondents and Responses: 1,310 respondents; 1,310 responses.

Estimated Time per Response: 1– 8 hours.

Frequency of Response: On occasion reporting requirement.

Obligation to Respond: Required to obtain or retain benefits. The statutory authority for this information collection is contained in Sections 154(i), 303, 310 and 533 of the Communications Act of 1934, as amended.

Total Annual Burden: 1,780 hours.

Total Annual Cost: $606,500.

Nature and Extent of Confidentiality: There is no need for confidentiality with this collection of information.

Needs and Uses: On January 29, 2010, the Commission released the Order, Digital Audio Broadcasting Systems and Their Impact on the Terrestrial Radio Broadcast Service ("Order"), DA 10–208, MM Docket 99–325. The Order will allow:

(1) Eligible authorized FM stations to commence operation of FM digital facilities with operating power up to –14 dB upon notice to the Commission on either Form 335 (the licensee of a super–powered FM station must file an informal request for any increase in the station's FM Digital ERP).

(2) Licensees to submit an application to the Media Bureau, in the form of an informal request, for any increase in FM Digital ERP beyond 6 dB.

(3) Licensees submitting such a request must use a simplified method set forth in the Order to determine the proponent station's maximum permissible FM Digital ERP.

(4) In situations where the simplified method is not applicable due to unusual terrain or other environmental or technical considerations or when it produces anomalous FM Digital ERP results, the Bureau will accept applications for FM Digital ERP in excess of –14 dB on a case–by–case basis when accompanied by a detailed showing containing a complete explanation of the prediction methodology used as well as data, maps and sample calculations.

(5) Finally, the Order implements interference mitigation and remediation procedures to resolve promptly allegations of digital interference to an authorized FM analog facility resulting from an FM Digital ERP power increase undertaken pursuant to the procedures adopted in the Order. Pursuant to these procedures, the affected analog FM station may file an interference complaint with the Bureau. In order to be considered by the Bureau, the complaint must contain at least six reports of ongoing (rather than transitory) objectionable interference. For each report of interference, the affected FM licensee must submit a map showing the location of the reported interference and a detailed description of the nature and extent of the interference being experienced at that location. Interference reports at locations outside a station's protected analog contour will not be considered. The complaint must also contain a complete description of the tests and equipment used to identity the alleged interference and the scope of the unsuccessful efforts to resolve the interference.

The following rule sections contain information collection requirements that have been approved by OMB and do not require any additional OMB approval because they did not change since last approved by OMB:

47 CFR 73.404(b) states in situations where interference to other stations is anticipated or actually occurs, AM licensees may, upon notification to the Commission, reduce the power of the primary Digital Audio Broadcasting (DAB) sidebands by up to 6 dB. Any greater reduction of sideband power requires prior authority from the Commission via the filing of a request for special temporary authority or an informal letter request for modification of license.

47 CFR 73.404(e) states licensees (commercial and noncommercial AM and FM radio stations) must provide notification to the Commission in Washington, DC, within 10 days of commencing in–band, on channel (IBOC) digital operation. The notification must include the following information:

(1) Call sign and facility identification number of the station;

(2) Date on which IBOC operation commenced;

(3) Certification that the IBOC DAB facilities conform to permissible hybrid specifications;

(4) Name and telephone number of a technical representative the Commission can call in the event of interference;

(5) FM digital effective radiated power used and certification that the FM analog effective radiated power remains as authorized;

(6) Transmitter power output; if separate analog and digital transmitters are used, the power output for each transmitter;

(7) If applicable, any reduction in an AM station's primary digital carriers;

(8) If applicable, the geographic coordinates, elevation data, and license file number of the auxiliary antenna employed by an FM station as a separate digital antenna;

(9) If applicable, for FM systems employing interleaved antenna bays, a certification that adequate filtering and/or isolation equipment has been installed to prevent spurious emissions in excess of the limits specified in Section 73.317;

(10) A certification that the operation will not cause human exposure to levels of radio frequency radiation in excess of the limits specified in Section 1.1310 of the Commission's rules and is therefore categorically excluded from environmental processing pursuant to Section 1306(b). Any station that cannot certify compliance must submit an environmental assessment ("EA") pursuant to Section 1.1311 and may not commence IBOC operation until such EA is ruled upon by the Commission.

Federal Communications Commission.

Marlene H. Dortch,

Secretary,

Office of the Secretary,

Office of Managing Director.

[FR Doc. 2010–14898 Filed 6–18–10; 8:45 am]

BILLING CODE 6712–01–S

FEDERAL HOUSING FINANCE AGENCY

[No. 2010–N–07]

Privacy Act of 1974; System of Records

AGENCY: Federal Housing Finance Agency.

ACTION: Notice of the establishment of a new system of records.

SUMMARY: The Federal Housing Finance Agency (FHFA) is revising the proposed system of records notice that was published in the **Federal Register** May 10, 2010, at 75 FR 25856. The system of records is "Compensation Information Provided by the Regulated Entities" (FHFA–4), which will contain compensation-related information on entities regulated by FHFA.

DATES: This system of records will become effective on June 21, 2010.

FOR FURTHER INFORMATION CONTACT: John Major, Privacy Act Officer, *john.major@fhfa.gov,* 202–408–2849; or David A. Lee, Senior Agency Official for Privacy, *david.lee@fhfa.gov,* 202–408–2514 (not toll-free numbers), Federal Housing Finance Agency, 1700 G Street NW., Fourth Floor, Washington, DC 20552. The telephone number for the Telecommunications Device for the Deaf is 800–877–8339.

SUPPLEMENTARY INFORMATION:

This notice informs the public of FHFA's system of records called "Compensation Information Provided by the Regulated Entities" (FHFA–4),

which will contain compensation-related information on entities regulated by FHFA, namely, the Federal Home Loan Banks, the Federal Home Loan Mortgage Corporation, and the Federal National Mortgage Association. This system of records notice will replace the proposed system of records notice published in the **Federal Register** on May 10, 2010, at 75 FR 25856. The information in the system of records is needed for FHFA staff members to make and support determinations relating to compensation consistent with the safety and soundness responsibilities of FHFA.

FHFA issued a proposed system of records notice in the **Federal Register** on May 10, 2010, at 75 FR 25856. FHFA received one public comment. The commenter requested that FHFA define the term "executive" as the term "executive officer" will be defined in FHFA's forthcoming final rule on executive compensation. FHFA has determined that a definition of the term is not necessary in this system of records notice. In addition, FHFA has deleted the reference to "employees" in the category of individuals covered by the system.

This notice satisfies the Privacy Act requirement that an agency publish a system of records notice in the **Federal Register** when there is an addition to the agency's system of records. It has been recognized by Congress that application of all requirements of the Privacy Act to certain categories of records may have an undesirable and often unacceptable effect upon agencies in the conduct of necessary public business. Consequently, Congress established general exemptions and specific exemptions that could be used to exempt records from provisions of the Privacy Act. Congress also required that exempting records from provisions of the Privacy Act would require the head of an agency to publish a determination to exempt a record from the Privacy Act as a rule in accordance with the Administrative Procedures Act. The Director of FHFA has determined that records and information in this new system of records is not exempt from requirements of the Privacy Act.

As required by the Privacy Act, 5 U.S.C. 552a(r), and pursuant to paragraph 4c of Appendix I to OMB Circular No. A–130, "Federal Agency Responsibilities for Maintaining Records About Individuals," dated February 8, 1996 (February 20, 1996; 61 FR 6427, 35), FHFA has submitted a report describing the new system of records covered by this notice, to the Committee on Government Operations of the House of Representatives, the Committee on Governmental Affairs of the Senate, and the Office of Management and Budget.

The system of records is set forth in its entirety below.

Dated: June 15, 2010.

Edward J. DeMarco,

Acting Director, Federal Housing Finance Agency.

FHFA–4

SYSTEM NAME:

Compensation Information Provided by the Regulated Entities.

SECURITY CLASSIFICATION:

Unclassified but sensitive.

SYSTEM LOCATION:

Federal Housing Finance Agency, 1700 G Street, NW., Washington, DC 20552 and 1625 Eye Street, NW., Washington, DC 20006.

CATEGORIES OF INDIVIDUALS COVERED BY THE SYSTEM:

Present and former directors and executives of the Federal Home Loan Banks, the Federal Home Loan Mortgage Corporation, and the Federal National Mortgage Association (collectively, "regulated entities").

CATEGORIES OF RECORDS IN THE SYSTEM:

Records contain information such as name, position, organization, address, education, professional credentials, work history, compensation data, and employment information of present and former directors and executives of the regulated entities.

AUTHORITY FOR MAINTENANCE OF THE SYSTEM:

The system is established and maintained pursuant to 12 U.S.C. 1427, 1452(h), 4502(6), 4502(12), 4513, 4514, 4517, 4518, 4526, 4617, 4631, 4632, 4636, and 1723a(d).

PURPOSE(S):

The information in this system of records will be analyzed and evaluated by FHFA staff members in carrying out the statutory authorities of the Director with respect to the oversight of compensation provided by the regulated entities, consistent with the safety and soundness responsibilities of FHFA under the Federal Housing Enterprises Financial Safety and Soundness Act of 1992, as amended, and the Federal Home Loan Bank Act, as amended.

ROUTINE USES OF RECORDS MAINTAINED IN THE SYSTEM, INCLUDING CATEGORIES OF USERS AND THE PURPOSES OF SUCH USES:

It shall be a routine use to disclose information contained in this system for the purposes and to the users identified below:

1. FHFA personnel authorized as having a need to access the records in performance of their official functions.

2. Another Federal agency if the records are relevant and necessary to carry out that agency's authorized functions and consistent with the purpose of the system.

3. A consultant, person, or entity that contracts or subcontracts with FHFA, to the extent necessary for the performance of the contract or subcontract and consistent with the purpose of the system, provided that the person or entity acknowledges in writing that it is required to maintain Privacy Act safeguards for the information.

DISCLOSURE TO CONSUMER REPORTING AGENCIES:

None.

POLICIES AND PRACTICE FOR STORING, RETRIEVING, ACCESSING, RETAINING AND DISPOSING OF RECORDS IN THE SYSTEM:

STORAGE:

Records in this system are stored in paper and electronic format.

RETRIEVABILITY:

Records can be retrieved by last name, first name, organization, and position.

SAFEGUARDS:

Records are maintained in controlled access areas. Electronic records are protected by restricted access procedures, including user identifications and passwords. Only FHFA staff members whose official duties require access are allowed to view, administer, and control these records.

RETENTION AND DISPOSAL:

Records are maintained in accordance with National Archives and Records Administration and FHFA retention schedules. Records are disposed of according to accepted techniques.

SYSTEM MANAGER(S) AND ADDRESS:

Office of Policy, Analysis and Research and the Division of Bank Regulation, Federal Housing Finance Agency, 1700 G Street, NW., Washington, DC 20552.

NOTIFICATION PROCEDURES:

Direct inquiries as to whether this system contains a record pertaining to an individual to the Privacy Act Officer by electronic mail, regular mail, or fax. The electronic mail address is *privacy@fhfa.gov.* The regular mail address is: Privacy Act Officer, Federal Housing Finance Agency, 1625 Eye Street, NW., Washington, DC 20006. The fax number is 202–408–2580. For the quickest possible handling, you should

mark your electronic mail, letter, or fax and the subject line, envelope, or fax cover sheet "Privacy Act Request" in accordance with the procedures set forth in 12 CFR part 1204.

RECORD ACCESS PROCEDURES:

Direct requests to access, amend, or correct a record to the Privacy Act Officer, Federal Housing Finance Agency, 1625 Eye Street, NW., Washington, DC 20006, in accordance with the procedures set forth in 12 CFR part 1204.

CONTESTING RECORD PROCEDURES:

Direct requests to contest or appeal an adverse determination for a record to the Privacy Act Appeals Officer, Federal Housing Finance Agency, 1700 G Street, NW., Washington, DC 20552, in accordance with the procedures set forth in 12 CFR part 1204.

RECORD SOURCE CATEGORIES:

The information is obtained from the regulated entities.

EXEMPTIONS CLAIMED FOR THE SYSTEM:

Some information in this system that is investigatory and compiled for law enforcement purposes is exempt under subsection 552a(k)(2) of the Privacy Act to the extent that information within the system meets the criteria of that subsection of the Privacy Act. The exemption is necessary in order to protect information relating to law enforcement investigations and interference with investigatory and law enforcement activities. The exemption will preclude subjects of investigations from frustrating investigations, will avoid disclosure of investigative techniques, will protect the identities and safety of confidential informants and of law enforcement personnel, will ensure FHFA's ability to obtain information from various sources, will protect the privacy of third-parties, and will safeguard sensitive information.

Some information contained in this system of records may be proprietary to other Federal agencies and subject to exemptions imposed by those agencies, including the criminal law enforcement investigatory material exemption of 5 U.S.C. 552a(j)(2).

[FR Doc. 2010–14912 Filed 6–18–10; 8:45 am]

BILLING CODE 8070–01–P

FEDERAL RESERVE SYSTEM

Formations of, Acquisitions by, and Mergers of Bank Holding Companies

The companies listed in this notice have applied to the Board for approval, pursuant to the Bank Holding Company Act of 1956 (12 U.S.C. 1841 *et seq.*) (BHC Act), Regulation Y (12 CFR Part 225), and all other applicable statutes and regulations to become a bank holding company and/or to acquire the assets or the ownership of, control of, or the power to vote shares of a bank or bank holding company and all of the banks and nonbanking companies owned by the bank holding company, including the companies listed below.

The applications listed below, as well as other related filings required by the Board, are available for immediate inspection at the Federal Reserve Bank indicated. The applications also will be available for inspection at the offices of the Board of Governors. Interested persons may express their views in writing on the standards enumerated in the BHC Act (12 U.S.C. 1842(c)). If the proposal also involves the acquisition of a nonbanking company, the review also includes whether the acquisition of the nonbanking company complies with the standards in section 4 of the BHC Act (12 U.S.C. 1843). Unless otherwise noted, nonbanking activities will be conducted throughout the United States. Additional information on all bank holding companies may be obtained from the National Information Center website at *www.ffiec.gov/nic/*.

Unless otherwise noted, comments regarding each of these applications must be received at the Reserve Bank indicated or the offices of the Board of Governors not later than July 16, 2010.

A. Federal Reserve Bank of Richmond (A. Linwood Gill, III, Vice President) 701 East Byrd Street, Richmond, Virginia 23261–4528:

1. CapGen Capital Group V LLC and CapGen Capital Group V LP, both of New York, New York; to become bank holding companies through the acquisition of up to 49.9 percent of the voting securities of Palmetto Bancshares,Inc., Greenville, South Carolina, and indirectly acquire The Palmetto Bank, Greenville, South Carolina.

B. Federal Reserve Bank of Atlanta (Clifford Stanford, Vice President) 1000 Peachtree Street, N.E., Atlanta, Georgia 30309:

1. BancTenn Corp., Kingsport Tennessee; to acquire up to 20 percent of the outstanding shares of Paragon Commercial Corporation, and its subsidiary, Paragon Commercial Bank, both of Raleigh, North Carolina.

Board of Governors of the Federal Reserve System, June 16, 2010.

Robert deV. Frierson,

Deputy Secretary of the Board.

[FR Doc. 2010–14885 Filed 6–18–10; 8:45 am]

BILLING CODE 6210–01–S

FEDERAL RESERVE SYSTEM

[Docket No. OP–1388]

RIN 7100–AD51

Home Mortgage Disclosure Act; Notice of Hearings

AGENCY: Board of Governors of the Federal Reserve System.

ACTION: Notice of public hearings; request for comment.

SUMMARY: The Federal Reserve Board will conduct four public hearings on potential revisions to the Board's Regulation C, which implements the Home Mortgage Disclosure Act (HMDA). HMDA requires mortgage lenders to provide detailed information about their mortgage lending activity to federal agencies and the public. Consumers, consumer advocacy organizations, mortgage lenders, and other interested parties will be invited to participate in the hearings. The Board also invites members of the public to attend the hearings and to comment on the issues that will be the focus of the hearings. Additional information about the hearings will be posted to the Board's Web site at *http://www.federalreserve.gov.*

DATES: The hearings are scheduled as follows.

Thursday, July 15, 2010: Federal Reserve Bank of Atlanta, 1000 Peachtree Street, NE., Atlanta, GA 30309, 8 a.m. to 1 p.m.

Thursday, August 5, 2010: Federal Reserve Bank of San Francisco, 101 Market Street, San Francisco, CA 94105, 8 a.m. to 1 p.m.

Thursday, September 16, 2010: Federal Reserve Bank of Chicago, 230 South LaSalle St., Chicago, IL 60604, 8 a.m. to 1 p.m.

Friday, September 24, 2010: Federal Reserve Board, 20th Street and Constitution Avenue, NW., Washington, DC 20551, 8 a.m. to 3:30 p.m.

Comments from persons unable to attend the hearings or otherwise wishing to submit written views on the issues raised in this notice must be received by August 20, 2010.

ADDRESSES: You may submit comments, identified by Docket No. OP–1388, by any of the following methods:

- *Agency Web Site: http://www.federalreserve.gov.* Follow the instructions for submitting comments at *http://www.federalreserve.gov/generalinfo/foia/ProposedRegs.cfm.*
- *Federal eRulemaking Portal: http://www.regulations.gov.* Follow the instructions for submitting comments.

• *E-mail: regs.comments@federalreserve.gov.* Include the docket number in the subject line of the message.

• *Fax:* (202) 452–3819 or (202) 452–3102.

• *Mail:* Address to Jennifer J. Johnson, Secretary, Board of Governors of the Federal Reserve System, 20th Street and Constitution Avenue, NW., Washington, DC 20551.

All public comments will be made available on the Board's Web site at *http://www.federalreserve.gov/generalinfo/foia/ProposedRegs.cfm* as submitted, unless modified for technical reasons. Accordingly, comments will not be edited to remove any identifying or contact information. Public comments may also be viewed electronically or in paper form in Room MP–500 of the Board's Martin Building (20th and C Streets, NW.) between 9 a.m. and 5 p.m. on weekdays.

FOR FURTHER INFORMATION CONTACT: Jennifer S. Benson, Jamie Z. Goodson, or Maureen C. Yap, Attorneys, Paul Mondor, Senior Attorney, or John C. Wood, Counsel, Division of Consumer and Community Affairs, Board of Governors of the Federal Reserve System, Washington, DC 20551, at (202) 452–2412 or (202) 452–3667. For users of Telecommunications Device for the Deaf (TDD) only, contact (202) 263–4869.

SUPPLEMENTARY INFORMATION:

I. Background

A. HMDA and Regulation C

The Home Mortgage Disclosure Act (HMDA), 12 U.S.C. 2801 *et seq.,* enacted in 1975, requires depository institutions and certain for-profit, nondepository institutions to collect, report to federal agencies, and disclose to the public data about originations and purchases of home mortgage loans (home purchase and refinancing) and home improvement loans, as well as loan applications that do not result in originations (for example, applications that are denied or withdrawn). HMDA has three purposes. First, HMDA data can be used to help determine whether institutions are serving the housing needs of their communities. Second, HMDA data can help public officials target public investment to attract private investment where it is needed. Third, HMDA data can assist in identifying possible discriminatory lending patterns and enforcing antidiscrimination statutes.

The Board's Regulation C implements HMDA. *See* 12 CFR Part 203. The information reported under Regulation C includes, among other items: Application date; loan type, purpose, and amount; property location and type; race, ethnicity, sex, and annual income of the loan applicant; action taken on the loan application (approved, denied, withdrawn, etc.), and date of that action; whether the loan is covered by the Home Ownership and Equity Protection Act (HOEPA); lien status (first lien, subordinate lien, or unsecured); and certain loan price information.

Institutions report HMDA data to their supervisory agencies on an application-by-application basis using a register format. Institutions must make their loan/application registers available to the public, with certain fields redacted to preserve applicants' privacy. The Federal Financial Institutions Examination Council, on behalf of the supervisory agencies, compiles the reported data and prepares an individual disclosure statement for each institution, aggregate reports for all covered institutions in each metropolitan area, and other reports. These disclosure statements and reports are also available to the public.

B. Prior Revisions to Regulation C

HMDA and Regulation C have been amended numerous times since they were adopted in 1975. The Board last conducted a comprehensive review of Regulation C in 2002. *See* 67 FR 7222, February 15, 2002; 67 FR 30771, May 8, 2002; and 67 FR 43218, June 27, 2002. The 2002 revisions to Regulation C were intended to facilitate fair lending analysis and enhance understanding of the home mortgage market generally and the subprime market in particular. In adopting changes to Regulation C, the Board carefully considered changes that had occurred in the home mortgage market, including the growth of subprime lending.

Among other things, the 2002 revisions to Regulation C:

• Required lenders to report pricing information for higher-priced mortgage loans;

• Required lenders to identify loans subject to HOEPA;

• Required lenders to report denials of applications received through certain preapproval programs and permitted lenders to report requests for preapproval that are approved but not accepted;

• Expanded the coverage of nondepository lenders by adding a loan origination dollar-volume threshold of $25 million;

• Required lenders to report whether a loan involves a manufactured home; and

• Required lenders to ask applicants their ethnicity, race, and sex in applications taken by telephone.

In 2008, the Board amended Regulation C to revise the rules for reporting price information on higher-priced mortgage loans. *See* 73 FR 63329, October 24, 2008. These revisions conformed Regulation C requirements to the definition of "higher-priced mortgage loan" adopted by the Board under Regulation Z (Truth in Lending) in July 2008. The Regulation C revisions required lenders to report the spread between a loan's annual percentage rate and a survey-based estimate of annual percentage rates currently offered on prime mortgage loans of a comparable type if the spread is equal to or greater than 1.5 percentage points for a first-lien loan or 3.5 percentage points for a subordinate-lien loan.

II. Information About the Hearings

The hearings are open to the public. Seating will be limited, however. Visitors will be required to register in advance for security purposes.

All hearings will include panel discussions by invited speakers. Other members of the public may deliver oral statements of five minutes or less during an "open-mike" period. Written statements of any length may be submitted for the record by submitting comments in accordance with the instructions above.

Information on registration to attend the hearings, registration to deliver an oral statement, and other information about the hearings, as it becomes available, will be posted on the Board's Web site at *http://www.federalreserve.gov.*

III. Hearings Topics and Request for Comment

The hearings will serve three objectives. First, the Board will gather information to evaluate the effectiveness of the 2002 revisions to Regulation C in providing useful and accurate information about the mortgage market. Second, the hearings will provide information that will assist the Board in its pending review of Regulation C and help assess the need for additional data. Third, the hearings will help identify emerging issues in the mortgage market that may warrant additional research.

The hearings' panel discussions will focus on, and the Board solicits public comment on, the matters described below. The Board asks that commenters address the importance or utility of particular information in light of the purposes of HMDA and the burdens and possible privacy risks associated with

collecting and reporting that information.

A. Data Elements

As part of its review of Regulation C, the Board is seeking to identify ways to improve the quality and usefulness of HMDA data. The Board therefore is considering whether any data elements should be added, modified, or deleted.

For example, Regulation C currently does not require lenders to submit information on several factors lenders routinely use to make credit decisions and set loan prices. These factors include information about the borrower's creditworthiness and loan-to-value and debt-to-income ratios. Regulation C also currently does not require lenders to submit other information that some HMDA data users and others have identified as potentially useful, such as an applicant's age and a loan's originator channel (*i.e.,* whether a loan is originated directly by the lender or through a third party originator such as a mortgage broker or correspondent). In addition, Regulation C currently requires lenders to report rate spread data only for higher-priced mortgage loans.

Some HMDA data users and others believe that collecting additional information would improve the usefulness of HMDA data in identifying possible discriminatory lending patterns and enforcing antidiscrimination statutes. On the other hand, the Board recognizes that requiring institutions to report additional data elements would increase reporters' compliance burden and costs and could pose risks to consumers' privacy.

In addition, Regulation C currently requires lenders to report only the amount of an applicant's income relied on in processing the application. Because lenders report only income they relied on in considering an application, HMDA data users cannot distinguish low- or moderate-income applicants from higher-income applicants who rely on only a portion of their income for purposes of their loan applications. Some HMDA data users and others have suggested that HMDA data would be more useful for determining whether institutions serve the housing needs of low- and moderate-income individuals if lenders were required to collect and report each applicant's total income, rather than just that relied on.

The Board recognizes, however, that it may be difficult to measure total income in a way that generates consistent, meaningful data because lenders may not collect information on applicants' total income in all cases. For example, an applicant may qualify for a particular loan on the basis of salary alone, and therefore may not provide the lender with information on other sources of income, such as an annual bonus, investment income, or alimony. Income sources that are included on an application would be easier for lenders to report but would not necessarily provide reliable information. To the extent lenders do not rely on such income they likely would not have verified it, possibly rendering such data of only questionable utility. Requiring lenders to collect and report total income information would increase reporters' compliance burden and costs.

The Board requests comment on the following questions:

- What, if any, additional data should be collected? What are the benefits, costs, and privacy issues associated with requiring lenders to report, for example: (i) Wnderwriting data such as borrower's credit score, loan-to-value ratio, combined loan-to-value ratio (*i.e.,* including both the reported loan and other debts), and borrower's debt-to-income ratio; (ii) borrower's age; (iii) loan originator channel; and (iv) rate spreads for all loans, instead of only for higher-priced loans?
- Should any existing data elements be modified? If so, how? For example, what are the benefits, costs, and privacy issues associated with requiring lenders to report total income, rather than income relied on by the lender?
- Should any existing data elements be eliminated? Why?

B. Coverage and Scope

Coverage

Regulation C currently requires depository institutions (*i.e.,* banks, savings associations, and credit unions) and for-profit mortgage lenders to submit HMDA data if they meet criteria set forth in the rule. Whether a depository institution or other mortgage lender is required to report depends on its size, the extent of its business in a metropolitan statistical area, and the extent to which it engages in residential mortgage lending. Some HMDA data users and others believe that other types of institutions, such as mortgage brokers and non-lender loan purchasers, also should be required to collect and report HMDA data. The Board requests comment on the following questions:

- Should mortgage brokers and non-lender loan purchasers be required to report HMDA data? Should other types of institutions be required to report? If so, which types?
- Should any types of institutions be exempt from reporting?
- Should the rules governing who must collect and report HMDA data be revised in other ways? If so, how?

Scope

Regulation C currently requires lenders to report information about home purchase loans, home improvement loans, and refinancings of home purchase loans. The Board requests comment on the following questions:

- Should any other types of mortgage loans be reported?
- Should any types of mortgage loans be excluded from reporting?
- Should the rules governing which mortgage loans are subject to reporting be revised in other ways? If so, how?

C. Preapproval Programs

Regulation C currently requires lenders to collect and report data regarding requests under a preapproval program if the preapproval request is denied; preapproval requests that are approved but not accepted may be reported at the lender's option. Regulation C defines a preapproval program as a program in which a lender, after a comprehensive review of the creditworthiness of the applicant, issues a written commitment to the applicant valid for a designated period of time to extend a home purchase loan up to a specified amount. Questions have been raised regarding whether lenders use preapproval programs as defined by Regulation C and whether there is a clear benefit to requiring lenders to report on these programs. The Board also is aware that some lenders may have difficulty applying the definition of preapproval program and determining when this requirement applies. In addition, lenders that do understand the definition may evade the reporting requirements, such as by communicating preapproval decisions orally.

The Board requests comment on the following questions:

- Do lenders use preapproval programs as defined by Regulation C?
- Is there a benefit to requiring lenders to report on these programs?
- How could the definition of preapproval program be modified to be easier to apply and to make reporting more useful?

D. Compliance and Technical Issues

The Board among other things seeks to clarify and simplify Regulation C in order to facilitate compliance and resolve technical issues. The Board requests comment on the following questions:

• What are the most common compliance issues institutions face under HMDA and Regulation C?

• What parts of Regulation C would benefit from clarification or additional guidance?

• Are there technical issues regarding Regulation C that should be resolved?

E. Other Issues

As part of its review of Regulation C, the Board is seeking to identify emerging issues in the mortgage market that may warrant additional research, respond to technological and other developments, reduce undue regulatory burden on industry, and delete obsolete provisions. The Board therefore requests comment on any emerging issues likely to affect the usefulness and accuracy of HMDA data and on any other changes to Regulation C the Board should consider.

By order of the Board of Governors of the Federal Reserve System, June 15, 2010.

Jennifer J. Johnson,

Secretary of the Board.

[FR Doc. 2010–14904 Filed 6–18–10; 8:45 am]

BILLING CODE 6210–01–P

FEDERAL TRADE COMMISSION

[File No. 081 0157]

U-Haul International, Inc. and AMERCO; Analysis of Agreement Containing Consent Order to Aid Public Comment

AGENCY: Federal Trade Commission.

ACTION: Proposed Consent Agreement.

SUMMARY: The consent agreement in this matter settles alleged violations of federal law prohibiting unfair or deceptive acts or practices or unfair methods of competition. The attached Analysis to Aid Public Comment describes both the allegations in the draft complaint and the terms of the consent order — embodied in the consent agreement — that would settle these allegations.

DATES: Comments must be received on or before July 9, 2010.

ADDRESSES: Interested parties are invited to submit written comments electronically or in paper form. Comments should refer to"U-Haul AMERCO, File No. 081 0157" to facilitate the organization of comments. Please note that your comment — including your name and your state — will be placed on the public record of this proceeding, including on the publicly accessible FTC website, at (*http://www.ftc.gov/os/publiccomments.shtm*).

Because comments will be made public, they should not include any sensitive personal information, such as an individual's Social Security Number; date of birth; driver's license number or other state identification number, or foreign country equivalent; passport number; financial account number; or credit or debit card number. Comments also should not include any sensitive health information, such as medical records or other individually identifiable health information. In addition, comments should not include any "[t]rade secret or any commercial or financial information which is obtained from any person and which is privileged or confidential. . . .," as provided in Section 6(f) of the FTC Act, 15 U.S.C. 46(f), and Commission Rule 4.10(a)(2), 16 CFR 4.10(a)(2). Comments containing material for which confidential treatment is requested must be filed in paper form, must be clearly labeled "Confidential," and must comply with FTC Rule 4.9(c), 16 CFR 4.9(c).[1]

Because paper mail addressed to the FTC is subject to delay due to heightened security screening, please consider submitting your comments in electronic form. Comments filed in electronic form should be submitted by using the following weblink: (*https//public.commentworks.com/ftc/U-HaulAmerco*) and following the instructions on the web-based form. To ensure that the Commission considers an electronic comment, you must file it on the web-based form at the weblink: (*https//public.commentworks.com/ftc/U-HaulAmerco*). If this Notice appears at (*http://www.regulations.gov/search/index.jsp*), you may also file an electronic comment through that website. The Commission will consider all comments that regulations.gov forwards to it. You may also visit the FTC website at (*http://www.ftc.gov/*) to read the Notice and the news release describing it.

A comment filed in paper form should include the "U-Haul AMERCO, File No. 081 0157" reference both in the text and on the envelope, and should be mailed or delivered to the following address: Federal Trade Commission, Office of the Secretary, Room H-135 (Annex D), 600 Pennsylvania Avenue, NW, Washington, DC 20580. The FTC is requesting that any comment filed in paper form be sent by courier or overnight service, if possible, because U.S. postal mail in the Washington area and at the Commission is subject to delay due to heightened security precautions.

The Federal Trade Commission Act ("FTC Act") and other laws the Commission administers permit the collection of public comments to consider and use in this proceeding as appropriate. The Commission will consider all timely and responsive public comments that it receives, whether filed in paper or electronic form. Comments received will be available to the public on the FTC website, to the extent practicable, at (*http://www.ftc.gov/os/publiccomments.shtm*). As a matter of discretion, the Commission makes every effort to remove home contact information for individuals from the public comments it receives before placing those comments on the FTC website. More information, including routine uses permitted by the Privacy Act, may be found in the FTC's privacy policy, at (*http://www.ftc.gov/ftc/privacy.shtm*).

FOR FURTHER INFORMATION CONTACT: Dana Abrahamsen (202-326-2906), Bureau of Competition, 600 Pennsylvania Avenue, NW, Washington, D.C. 20580.

SUPPLEMENTARY INFORMATION: Pursuant to section 6(f) of the Federal Trade Commission Act, 38 Stat. 721, 15 U.S.C. 46(f), and § 2.34 the Commission Rules of Practice, 16 CFR 2.34, notice is hereby given that the above-captioned consent agreement containing a consent order to cease and desist, having been filed with and accepted, subject to final approval, by the Commission, has been placed on the public record for a period of thirty (30) days. The following Analysis to Aid Public Comment describes the terms of the consent agreement, and the allegations in the complaint. An electronic copy of the full text of the consent agreement package can be obtained from the FTC Home Page (for June 9, 2010), on the World Wide Web, at (*http://www.ftc.gov/os/actions.shtm*). A paper copy can be obtained from the FTC Public Reference Room, Room 130-H, 600 Pennsylvania Avenue, NW, Washington, D.C. 20580, either in person or by calling (202) 326-2222.

Public comments are invited, and may be filed with the Commission in either paper or electronic form. All comments should be filed as prescribed in the **ADDRESSES** section above, and must be received on or before the date specified in the **DATES** section.

[1] The comment must be accompanied by an explicit request for confidential treatment, including the factual and legal basis for the request, and must identify the specific portions of the comment to be withheld from the public record. The request will be granted or denied by the Commission's General Counsel, consistent with applicable law and the public interest. *See* FTC Rule 4.9(c), 16 CFR 4.9(c).

Analysis of Agreement Containing Consent Order to Aid Public Comment

The Federal Trade Commission has accepted, subject to final approval, an agreement containing a proposed consent order with U-Haul International, Inc. and its parent company AMERCO (collectively referred to as "U-Haul" or "Respondents"). The agreement settles charges that U-Haul violated Section 5 of the Federal Trade Commission Act, 15 U.S.C. § 45, by inviting its closest competitor in the consumer truck rental industry to join with U-Haul in a collusive scheme to raise rates. The proposed consent order has been placed on the public record for 30 days to receive comments from interested persons. Comments received during this period will become part of the public record. After 30 days, the Commission will review the agreement and the comments received, and will decide whether it should withdraw from the agreement or make the proposed order final.

The purpose of this analysis is to facilitate comment on the proposed order. The analysis does not constitute an official interpretation of the agreement and proposed order, and does not modify their terms in any way. Further, the proposed consent order has been entered into for settlement purposes only, and does not constitute an admission by Respondents that it violated the law or that the facts alleged in the complaint (other than jurisdictional facts) are true.

I. The Complaint

The allegations of the complaint are summarized below:

U-Haul is the largest consumer truck rental company in the United States. Edward J. Shoen is the Chairman, President and Director of AMERCO, and the Chief Executive Officer and Chairman of U-Haul International, Inc. U-Haul's primary competitors in the truck rental industry are Avis Budget Group, Inc. ("Budget") and Penske Truck Leasing Co., L.P. ("Penske").

A. Private Communications

For several years leading up to 2006, Mr. Shoen was aware that price competition from Budget was forcing U-Haul to lower its rates for one-way truck rentals. In 2006, Mr. Shoen developed a strategy in an attempt to eliminate this competition and thereby secure higher rates. Mr. Shoen instructed U-Haul regional managers to raise rates for truck rentals, and then contact Budget to inform Budget of U-Haul's conditional rate increase and encourage Budget to follow, or U-Haul's rates would be reduced to the original level.

At about the same time, Mr. Shoen also instructed local U-Haul dealers to communicate with their counterparts at Budget and Penske, with the purpose of re-enforcing the message that U-Haul had raised its rates, and competitors' rates should be raised to match the increased U-Haul rates.

In late 2006 and thereafter, U-Haul representatives contacted Budget and invited price collusion as instructed by Mr. Shoen. The complaint includes specific allegations regarding the

U-Haul operation in Tampa, Florida.

U-Haul's regional manager for the Tampa area is Robert Magyar. In October 2006, Mr. Magyar received from Mr. Shoen the instructions described above. In response to Mr. Shoen's directive, Mr. Magyar increased U-Haul's rates for one-way truck rentals commencing in the Tampa area. Next, Mr. Magyar telephoned Budget and communicated to Budget representatives that U-Haul had raised its rates in Tampa, and that the new rates could be viewed on the U-Haul web-site.

One year later, in October 2007, Mr. Magyar again contacted several local Budget locations. Mr. Magyar communicated to Budget that U-Haul had increased its one-way truck rental rates, and that Budget should increase its rates as well. In an e-mail message addressed to U-Haul's most senior executives, Mr. Magyar related the conversations, as follows:

> I have also called 3 major Budget locations in Tampa and told them who I am, I spoke about the .40 per mile rates to SE Florida and told them I was killing them on rentals to that area and I am setting new rates to the area to increase revenue per rental. I encouraged them to monitor my rates and to move their rates up. And they did.

B. Public Communications

In late 2007, Mr. Shoen decided that U-Haul should attempt to lead an increase in rates for one-way truck rentals across the United States. Mr. Shoen understood that this rate increase could be sustained only if Budget followed. On November 19, 2007, Mr. Shoen instructed U-Haul regional managers to raise prices. His expectation was that Budget would follow this rate increase.

However, Budget did not immediately match U-Haul's higher rates. U-Haul instructed its regional managers to maintain the new, higher rates for a while longer, in case Budget should take note and decide to follow.

U-Haul held an earnings conference call on February 7, 2008. Mr. Shoen was aware that Budget representatives would monitor the call. Mr. Shoen opened the earnings conference call with a short statement, noting U-Haul's efforts "to show price leadership."[2] When asked for additional information on industry pricing, Mr. Shoen made the following points:

1.U-Haul is acting as the industry price leader. The company has recently raised its rates, and competitors should do the same.

2.To date, Budget has not matched U-Haul's higher rates. This is unfortunate for the entire industry.

3. U-Haul will wait a while longer for Budget to respond appropriately, otherwise it will drop its rates.

4. In order to keep U-Haul from dropping its rates, Budget does not have to match U-Haul's rates precisely. U-Haul will tolerate a small price differential, but only a small price differential. Specifically, a 3 to 5 percent price difference is acceptable.

5. For U-Haul, market share is more important than price. U-Haul will not permit Budget to gain market share at U-Haul's expense.

With regard to both the private and public communications, U-Haul acted with the specific intent to facilitate collusion and increase the prices it could charge for truck rentals.

II. Analysis

The term "invitation to collude" describes an improper communication from a firm to an actual or potential competitor that the firm is ready and willing to coordinate on price or output. Such invitations to collude increase the risk of anticompetitive harm to consumers, and as such, can violate Section 5 of the FTC Act.[3]

If the invitation is accepted and the two firms reach an agreement, the Commission will allege collusion and refer the matter to the Department of Justice for a criminal investigation. In

[2] A complete transcript of the earnings conference call is annexed to the complaint as Exhibit A.

[3] *In the Matter of Valassis Communications, Inc.*, 141 F.T.C. ___ (C-4160) (2006); *In the Matter of MacDermid, Inc.*, 129 F.T.C. ___ (C-3911) (2000); *In the Matter of Stone Container Corp.*, 125 F.T.C. 853 (1998); *In the Matter of Precision Moulding Co.*, 122 F.T.C. 104 (1996); *In the Matter of YKK (USA) Inc.*, 116 F.T.C. 628 (1993); *In the Matter of A.E. Clevite, Inc.*, 116 F.T.C. 389 (1993); *In the Matter of Quality Trailer Products Corp.*, 115 F.T.C. 944 (1992). In addition, invitations to collude may be violations of Section 2 of the Sherman Act as acts of attempted monopolization (*United States v. American Airlines*, 743 F.2d 1114 (5th Cir. 1984), *cert. dismissed*, 474 U.S. 1001 (1985)); as well as violations under the federal wire and mail fraud statutes, (*United States v. Ames Sintering Co.*, 927 F.2d 232 (6th Cir. 1990)).

this case, the complaint does not allege that U-Haul and Budget reached an agreement, despite Mr. Magyar's report to his bosses that he privately encouraged Budget to raise its rates "and they did." *See* Complaint Paragraph 19.

Even if no agreement was reached it does not necessarily mean that no competitive harm was done.[4] An unaccepted invitation to collude may facilitate coordinated interaction by disclosing the solicitor's intentions and preferences. For example, in this case Budget learned from Mr. Magyar that if Budget raised its rates U-Haul would not undercut Budget. Thus, the improper communication from U-Haul could have encouraged Budget to raise rates. Similarly, the public statements made by the CEO of U-Haul could have encouraged competitors to raise rates.

Although this case involves particularly egregious conduct, it is possible that less egregious conduct may result in Section 5 liability. It is not essential that the Commission find repeated misconduct attributable to senior executives, or define a market, or show market power, or establish substantial competitive harm, or even find that the terms of the desired agreement have been communicated with precision.

III. The Proposed Consent Order

U-Haul has signed a consent agreement containing the proposed consent order. The proposed consent order consists of seven sections that work together to enjoin U-Haul from inviting collusion and from entering into or implementing a collusive scheme.

Section II, Paragraph A of the proposed consent order enjoins U-Haul from inviting a competitor to divide markets, to allocate customers, or to fix prices. Section II, Paragraph C prohibits U-Haul from entering into, participating in, maintaining, organizing, implementing, enforcing, inviting, offering or soliciting an agreement with any competitor to divide markets, to allocate customers, or to fix prices. Section II, Paragraph B bars U-Haul from discussing rates with its competitors, with a proviso permitting legitimate market research.

The proviso in Section II, Paragraph D prevents the proposed order from interfering with U-Haul's efforts to negotiate prices with prospective customers, and it would permit U-Haul to provide investors with considerable information about company strategy. This proviso also permits U-Haul to communicate publicly any information required by the federal securities laws.

Sections III, IV, V, and VI of the proposed order include several terms that are common to many Commission orders, facilitating the Commission's efforts to monitor respondents' compliance with the order. Section IV, Paragraph A requires a periodic submission to the Commission of *unredacted* copies of certain internal U-Haul documents. This provision is necessary because U-Haul impeded the Federal Trade Commission's investigation of this matter. Specifically, U-Haul submitted to the Commission, in response to a *subpoena duces tecum*, documents authored by Mr. Shoen, from which were redacted many of the sentences quoted in the complaint. In the Commission's view, there was no justification for the redaction. The proposed order should deter repetition of this conduct.

Finally, Section VII provides that the proposed order will expire in 20 years.

By direction of the Commission.

Donald S. Clark,

Secretary.

Statement of Chairman Leibowitz, Commissioner Kovacic, and Commissioner Rosch

The Commission today has entered into a consent agreement with U-Haul and its parent company, AMERCO, resolving the Commission's allegation that they attempted to collude on truck rental prices. The parties have settled an invitation-to-collude case and not a Sherman Antitrust Act Section 1 conspiracy case. Put differently, the complaint in this case alleges an unfair method of competition in violation of Section 5 of the FTC Act that does not also constitute an antitrust violation.

Invitations to collude are the quintessential example of the kind of conduct that should be – and has been – challenged as a violation of Section 5 of the Federal Trade Commission Act,[5] which may limit follow-on private treble damage litigation from Commission action while still stopping inappropriate conduct. In contrast to conspiracy claims that would violate Section 1, invitations to collude do not require proof of an agreement; nor do they require proof of an anticompetitive effect. The Commission has not alleged that Respondents entered into an agreement with Budget or any other competitors in violation of Section 1. Today's Commission action is instead based on evidence that Respondents unilaterally attempted to enter into such an agreement. The Commission therefore has reason to believe that Respondents engaged in conduct that is within Section 5's reach.

[FR Doc. 2010–14870 Filed 6–18–10: 8:45 am]

BILLING CODE 6750–01–S

[4] The Commission has previously explained that there are several legal and economic reasons to punish firms that invite collusion even when acceptance cannot be proven. First, it may be difficult to determine whether a particular solicitation has or has not been accepted. Second, the conduct may be harmful and serves no legitimate business purpose. Third, even an unaccepted solicitation may facilitate coordinated interaction by disclosing the intentions or preferences of the party issuing the invitation. *In the Matter of Valassis Communications, Inc.*, Analysis of Agreement Containing Consent Order To Aid Public Comment, 71 Fed. Reg. 13976, 13978-79 (Mar. 20, 2006). *See generally* P. Areeda & H. Hovenkamp, VI Antitrust Law ¶1419 (2003).

[5] *In re Valassis Commc'ns, Inc.*, F.T.C. File No. 051-008, 2006 FTC LEXIS 25 (April 19, 2006) (Complaint); *In re MacDermid, Inc.*, F.T.C. File No. 991-0167, 1999 FTC LEXIS 191 (Feb. 4, 2000) (Complaint, Decision and Order); *In re Stone Container Corp.*, 125 F.T.C. 853 (1998) (June 3, 1998) (Complaint, Decision and Order); *In re Precision Moulding Co.*, 122 F.T.C. 104 (Sept. 3, 1996) (Complaint, Decision and Order); *In re YKK (USA) Inc.*, 116 F.T.C. 628 (July 1, 1993) (Complaint); *In re A.E. Clevite, Inc.*, 116 F.T.C. 389 (June 8, 1993) (Complaint); *In re Quality Trailer Products Corp.*, 115 F.T.C. 944 (Nov. 5, 1992) (Complaint).

DEPARTMENT OF HEALTH AND HUMAN SERVICES

Office of the Secretary

Office of the Assistant Secretary for Preparedness and Response; Statement of Organization, Functions, and Delegations of Authority

Part A, Office of the Secretary, Statement of Organization, Functions, and Delegations of Authority of the Department of Health and Human Services (HHS) is being amended at Chapter AN, Office of Public Health Emergency Preparedness (OPHEP), as last amended at 71 FR 38403–05 dated July 6, 2006. This organizational change is to retitle the OPHEP as the Office of the Assistant Secretary for Preparedness and Response (ASPR), and to realign the functions of ASPR to reflect the changes mandated by the Pandemic and All-Hazards Preparedness Act (Pub. L. 109–417) (PAHPA). The changes are as follows.

I. Under Part A, Chapter AN, "Office of Public Health Emergency Preparedness (AN)," delete in its entirety and replace with the following:

CHAPTER AN: Office of the Assistant Secretary for Preparedness and Response

AN.00 Mission
AN.10 Organization
AN.20 Functions

Section AN.00 Mission

On behalf of the Secretary of HHS, the Assistant Secretary for Preparedness and Response (ASPR) serves as the principal advisor on all matters related to Federal public health and medical preparedness and response for public health emergencies. The ASPR serves as the primary advisor to the Secretary of HHS for national public health and medical preparedness, including Emergency Support Function 8 (ESF 8). Furthermore, the ASPR exercises the responsibilities of the Secretary with respect to direction of ESF 8 activities, and coordination of HHS assets in accord with the PAHPA, including the Strategic National Stockpile (SNS) and the Cities Readiness Initiative (CRI).

ASPR leads the Federal public health and medical response to acts of terrorism, nature, and other public health and medical emergencies; coordinates the development and implementation of national policies and plans related to public health and medical preparedness and response; oversees the advanced research, development, and procurement of qualified countermeasures and qualified pandemic or epidemic products; coordinates services for at-risk individuals, preparedness planning, and response efforts; and provides guidance in international programs, initiatives, and policies that deal with public health and medical emergency preparedness and response. ASPR is responsible for ensuring a consolidated approach to developing public health and medical preparedness and response capabilities and leading and coordinating the relevant activities of the HHS Operating Divisions (OPDIVs) and Staff Divisions (STAFFDIVs).

The Office of the ASPR is charged with strategic and operational responsibilities for medical and public health preparedness and response. The Immediate Office of the ASPR provides staff guidance to maximize operational effectiveness and is responsible for reviewing staff recommendations of policies developed to further the ASPR and HHS mission.

Strategic responsibilities include policy development and implementation, oversight of the National Health Security Strategy, and coordination across HHS, with other Federal agencies, and state, local and private sector entities. The ASPR is the primary HHS liaison to and leads coordination of Homeland and National Security Councils' policy initiatives and is responsible for the integration of national public health and medical preparedness and response efforts into the Federal interagency planning and policy processes.

Operational responsibilities include (but are not limited to) the following:

- Serves as the Incident Manager for ESF 8 during activations;
- Directs and coordinates the development of ESF 8 Playbooks, Concepts of Operations (CONOPS), Operating Plans (OPLANS), and other planning or procedural documents that set forth how HHS response assets are to be employed in various emergency contexts;
- Coordinates preparedness and response planning with state, local, and private sector entities in furtherance of the National ESF 8 mission;
- Assures that planning and procedural documents make explicit the respective roles of ASPR Headquarters staff, ASPR Regional Emergency Coordinators, the ASPR field incident management teams, HHS Secretary's Operations Center (SOC), Centers for Disease Control and Prevention (CDC) Headquarters staff, the Director's Emergency Operations Center, Federal Emergency Management Agency (FEMA) Operations Center, Department of Homeland Security (DHS) National SOC, CDC field staff such as SNS consultants, and other HHS division response assets;
- Assures clarity in state ESF 8 planning by convening state ESF 8 planning meetings with the Department of State, ASPR, CDC, and other organizations as necessary to ensure medical, public health, and human service functions are integrated;
- Manages the Hospital Preparedness Program (HPP) Cooperative Agreement, which provides financial and technical support for medical preparedness to health care facilities throughout the country;
- Facilitates HHS participation in development of International Health Regulations (IHR);
- Manages the National Disaster Medical System (NDMS);
- Manages the Biomedical Advanced Research and Development Authority (BARDA); and
- Manages and operates the HHS SOC.

Section AN.10 Organization

The Office of the Assistant Secretary for Preparedness and Response is headed by the Assistant Secretary for Preparedness and Response (ASPR), who reports directly to the Secretary, and includes the following components:

- Immediate Office/Chief Operating Officer (ANA)
- Office of Biomedical Advanced Research and Development Authority (ANB)
- Office of Preparedness and Emergency Operations (ANC)
- Office of Acquisitions Management, Contracts, and Grants (AND)
- Office of Policy and Planning (ANE)
- Office of Financial Planning and Analysis (ANF)

Section AN.20 Functions

A. Immediate Office/Chief Operating Officer (ANA). The Immediate Office (IO) develops and maintains liaison relationships with HHS operating and staff divisions and represents HHS at interagency meetings, as required. The IO provides information to those individuals and organizations that inquire about or express interest in ASPR. The IO establishes and maintains effective communications to advise mid- and long-range plans to emphasize recent or forthcoming changes in plans and regulations, to receive effective feedback; and explore ways to implement suggestions for improved business operations and performance. The IO is responsible for the direction of executive level business management operations and managing division staff coordination. The IO is responsible for the timely and quality execution of all management related matters under the ASPR mission. The IO provides staff guidance to maximize operational effectiveness. The IO is responsible for reviewing staff recommendations of policies developed to further the ASPR and HHS mission. The IO staff considers the potential impact of political, social, economic, technical, and administrative factors on the recommended policies and formally recommends actions on approving/disapproving policies to the ASPR.

The Immediate Office/Chief Operating Officer (ANA) includes the following components:

- Division of Administrative Management (ANA1)
- Division of Communications (ANA2)
- Division of Legislative Coordination (ANA3)
- Division of Workforce Development (ANA4)
- Division of Executive Secretariat (ANA5)

The Immediate Office/Chief Operating Officer provides for the facility, logistics, and infrastructure support services necessary to maintain day-to-day operations of ASPR; the office provides communication and outreach guidance and support for all external communications, including legislative and executive branch questions and

inquiries, and serves as the principal advisor to the ASPR on all legislative strategies to fulfill the Office of the ASPR and the HHS mission under the PAHPA. Furthermore, the Office covers the functions of Human Resources, Organization and Employee Development, Ethics, and United States Public Health Service (USPHS) Liaison, and develops and maintains liaison relationships with HHS OPDIVs and STAFFDIVs. The Chief Operating Officer manages correspondence control for the Assistant Secretary. In addition, the office provides oversight in the development and operation of tracking systems, which are designed to identify and resolve early warnings and bottleneck problems with executive correspondence.

B. Office of Biomedical Advance Research and Development Authority (ANB). The Office of Biomedical Advanced Research and Development Authority (BARDA), established in April 2007 in response to the Pandemic and All-Hazards Preparedness Act of 2006, serves preparedness and response roles to provide medical countermeasures (MCM) in order to mitigate the medical consequences of chemical, biological, radiological, and nuclear (CBRN) threats and agents and emerging infectious diseases, including pandemic influenza. BARDA executes this mission by facilitating research, development, innovation, and acquisition of medical countermeasures and expanding domestic manufacturing infrastructure and surge capacity of these medical countermeasures.

BARDA is headed by a Deputy Assistant Secretary, and includes the following components:

- Division of Influenza (ANB1)
- Division of Emerging Infectious Diseases (ANB2)
- Division of Chemical, Biological, Radiological and Nuclear Threats (ANB3)
- Division of Strategic Science and Technology (ANB4)
- Division of Regulatory and Quality Affairs (ANB5)

C. Office of Preparedness and Emergency Operations (ANC). The Office of Preparedness and Emergency Operations (OPEO) is responsible for providing a well-integrated infrastructure that supports the Department's capabilities to prevent, prepare for, respond to and recover from natural public health and medical threats and emergencies. OPEO leads the preparedness and response activities required to coordinate public health and medical response systems and activities with relevant Federal, state, Tribal, Territorial, local, and international communities under ESF 8, ESF 6 and ESF 14 of the NRF. OPEO is also responsible for the HHS Continuity of Operations (COOP) and the development of the ASPR COOP Plan.

The Office of Preparedness and Emergency Operations (OPEO) is headed by a Deputy Assistant Secretary, and includes the following components:

- Division of Mass Care (ANC1)
- Division of Operations (ANC2)
- Division of Planning (ANC3)
- Division of Infrastructure Coordination (ANC4)
- Division of Emergency Care Coordination Center (ECCC) (ANC5)
- Division of National Disaster Medical System (NDMS) (ANC6)

D. Office of Acquisitions Management, Contracts and Grants (AND). The Office of Acquisitions Management, Contracts and Grants (AMCG) provides ASPR with acquisition support to prepare and respond to the adverse health emergencies and disasters and provides contractual support to the Immediate Office of the ASPR, BARDA, Office of Policy and Planning (OPP), and Office of Financial Planning and Analysis (FPA). The office focuses on providing acquisition and contractual support to BARDA in two specific program divisions: Chemical, Biological, Radiological, and Nuclear Threats (CBRNT) and Influenza (Flu). The Division of Acquisition Programs Support (APS) provides a wide range of program management support to the ASPR as well as direct program support to the following BARDA divisions—CBRN, Influenza, Emerging Infectious Diseases, and Strategic Science and Technology. Functional support activities of the Office include requirements analysis for statement of work/statement of operations development, acquisition strategy development and tracking assistance to include contractual milestone development with measurable success criteria. The office also serves as ASPR's focal point for management, leadership and administration of discretionary and mandatory grants and cooperative agreements.

The Office of Acquisitions Management, Contracts and Grants (AMCG) is headed by a Director, and includes the following components:

- Division of ASPR Support (AND1)
- Division of BARDA Support (AND2)
- Division of Acquisition Programs Support (AND3)
- Division of Grants Management (AND4)
- Division of Acquisition Policy (AND5)

E. Office of Policy and Planning (ANE). The Office of Policy and Planning (OPP) is responsible for policy development, analysis and coordination, research and evaluation, and strategic planning. The OPP: (1) Analyzes proposed policies, Presidential Directives, and regulations, and develops short- and long-term policy objectives for ASPR; (2) leads the development and implementation of an integrated ASPR approach to policy; (3) serves as the focal point for the Homeland Security Council (HSC) and the National Security Council (NSC) policy coordination activities on behalf of ASPR and represents the ASPR, as appropriate, in interagency policy coordination meetings and activities; (4) undertakes studies of preparedness and response issues, identifying gaps in policy, and initiating policy planning and formulation to fill these gaps; (5) leads in the implementation of the PAHPA and is responsible for developing the quadrennial National Health Security Strategy and implementation plan for public health emergency preparedness and response; (6) develops strategic partnerships with stakeholders and leads in the development of ASPR strategies for knowledge and information management; (7) manages the development of the ASPR strategic plan, annual plan, and balanced scorecard, and compiles the ASPR Organizational Assessment by tracking Key Performance Indicators as part of the ASPR strategic management system; (8) develops and maintains liaison relationships with strategic planning personnel of HHS and ESF 8 partner organizations; and (9) manages strategic planning program objectives to ensure programs are consistent with ASPR goals and monitors program development to make sure that timelines are met accordingly.

OPP is headed by a Deputy Assistant Secretary and includes the following components:

- Division of Policy and Strategic Planning (ANE1)
- Division of Medical Countermeasures Policy and Planning (ANE2)
- Division of Health Systems Policy (ANE3)
- Division of International Health (ANE4)
- Division of Biosecurity/Biosafety/Countering Biologic Threats (ANE5)

F. Office of Financial Planning and Analysis (ANF). The Office of Financial Planning and Analysis (OFPA) ensures that ASPR's financial resources are aligned to its strategic priorities. OFPA carries out its responsibilities by

formulating, monitoring, and evaluating ASPR budgets and financial plans that support program activities and ensures the effective and efficient execution of ASPR financial resources. OFPA has administrative oversight of the Administration & Finance section of the emergency management group that is activated under ESF 8 of the NRF during a public health emergency. On behalf of the ASPR, OFPA serves as the primary point of contact with the Office of the Assistant Secretary for Financial Resources, the Office of Management and Budget (OMB) and Congressional Appropriation Committees. In compliance with OMB Circular A–123, FPA ensures accountability and effectiveness of ASPR's financial programs and operations by establishing, assessing, correcting, and reporting on internal controls.

The Office of Financial Planning and Analysis is headed by a Director and includes the following components:

- Division of Budget Formulation and Execution (ANF1)
- Division of Requisition Services (ANF2)
- Division of Management Assurance (ANF3)
- Division of Administration and Finance (ANF4)

II. Delegations of Authority. All delegations and redelegations of authority made to officials and employees of affected organizational components will continue in them or their successors pending further redelegation, provided they are consistent with this reorganization.

Dated: June 14, 2010.

E.J. Holland, Jr.,

Assistant Secretary for Administration.

[FR Doc. 2010–14997 Filed 6–18–10; 8:45 am]

BILLING CODE 4150–37–P

DEPARTMENT OF HEALTH AND HUMAN SERVICES

Agency for Healthcare Research and Quality

Agency Information Collection Activities; Proposed Collection; Comment Request

AGENCY: Agency for Healthcare Research and Quality, HHS.

ACTION: Notice.

SUMMARY: This notice announces the intention of the Agency for Healthcare Research and Quality (AHRQ) to request that the Office of Management and Budget (OMB) approve the proposed information collection project: "Avoiding Readmissions in Hospitals Serving Diverse Patients." In accordance with the Paperwork Reduction Act, 44 U.S.C. 3501–3520, AHRQ invites the public to comment on this proposed information collection.

DATES: Comments on this notice must be received by August 20, 2010.

ADDRESSES: Written comments should be submitted to: Doris Lefkowitz, Reports Clearance Officer, AHRQ, by e-mail at *doris.lefkowitz@AHRQ.hhs.gov.*

Copies of the proposed collection plans, data collection instruments, and specific details on the estimated burden can be obtained from the AHRQ Reports Clearance Officer.

FOR FURTHER INFORMATION CONTACT: Doris Lefkowitz, AHRQ Reports Clearance Officer, (301) 427–1477, or by e-mail at *doris.lefkowitz@AHRQ.hhs.gov.*

SUPPLEMENTARY INFORMATION:

Proposed Project

Avoiding Readmissions in Hospitals Serving Diverse Patients

An important part of AHRQ's mission is to disseminate information and tools that can support improvement in quality and safety in the U.S. health care community. The transition process from the hospital to the outpatient setting is nonstandardized and frequently inadequate in quality. One in five hospital discharges is complicated by an adverse event (AE) within 30 days, often leading to an emergency department visit and/or rehospitalization. Many readmissions stem from errors that can be directly attributed to the discontinuity and fragmentation of care at discharge. High rates of low health literacy, lack of coordination in the "hand-off' from the hospital to community care, gaps in social supports, and other limitations also contribute to the risk of rehospitalization.

Boston University Medical Center (BUMC), through a grant from AHRQ, previously defined the discharge process and determined what improvements could be made to improve this care transition for patients. This new process was called the "re-engineered discharge" (RED). The RED consists of 11 elements, including educating the patient throughout the hospital stay, making follow-up appointments, and giving the patient a written discharge plan. The RED was tested in a randomized controlled trial in an academic safety net hospital at BUMC with English speaking, general medical patients being discharged to home or community settings. Results of this trial of 749 patients showed a reduction in rehospitalizations within 30 days and emergency department visits following hospital discharge. Participants also followed up with primary care providers more often and reported higher patient satisfaction with the discharge process. Project RED researchers created several tools to help hospitals replicate RED. After AHRQ and Project RED researchers fielded many inquiries about how to implement Project RED at hospitals nationwide, AHRQ realized that the Project RED Toolkit did not provide sufficient guidance to potential replicators. Various components of the RED were not documented, and issues regarding implementing the RED at hospitals serving linguistically and culturally diverse patient populations had not been addressed. AHRQ has therefore contracted with the RED researchers to create a revised RED Toolkit that will address these issues.

This proposed information collection supports AHRQs mission by improving upon the RED Toolkit. This project has the following 3 goals:

(1) To revise the Project RED Toolkit to comprehensively address all components of the RED, as well as the needs of culturally and linguistically diverse patients;

(2) To pre-test the revised RED Toolkit in ten varied hospital settings, evaluating how the RED Toolkit is implemented in varied hospital settings by: (a) Documenting the implementation process; (b) assessing the fidelity of implementation; and (c) identifying the factors that affect redesign fidelity, including intensity of technical assistance (TA).

(3) To modify the revised RED Toolkit based on pre-testing and to disseminate it.

BUMC will provide TA at two varying levels. Four selected hospitals will receive "train-the-trainer" TA, which includes:

(1) Telephone assistance in conducting a baseline needs assessment;

(2) Master trainer training;

(3) Access to Webinar trainings specifically designed for each user (nurse, IT professional, hospital leadership, and pharmacist);

(4) An electronic template to print an After Hospital Care Plan (AHCP) booklet; and

(5) E-mails regarding updates to the RED Web site and the opportunity to ask questions about the newly revised and enhanced RED tools and implementation via telephone and email.

Six selected hospitals will receive intensive TA, which includes:

(1) Telephone baseline needs assessment;

(2) On-site training;

(3) Monthly semi-structured interviews via phone calls with the implementation team to discuss implementation efforts and barriers;

(4) Adaptation of the revised RED Toolkit to include specific details about the hospital (such as the hospital name on the cover of the AHCP booklet and hospital-specific services provided to patients included in the AHCP booklet);

(5) An assessment and evaluation site visit by the organizational change evaluator (a member of the implementation team), at baseline and 12 months after the start of implementation efforts to interview select participating hospital staff;

6) IT support to install and support the RED Toolkit software to automatically generate the AHCP booklet; and

(7) E-mails regarding updates to the RED Web site and the opportunity to ask questions about the newly revised and enhanced RED tools and implementation via telephone and email.

A diverse group of hospitals will be selected to receive each level of TA, based upon hospital size, location, readmission rate and patient population. Implementing the revised RED Toolkit in diverse settings will provide a better understanding of whether and how RED can be best implemented in different hospital settings.

The project will be framed within a model of organizational change and transformation called the Organizational Transformation Model (OTM), which is based on the evaluation of Robert Wood Johnson Foundation's Pursuing Perfection initiative. OTM identifies key elements that drive dramatic system change and informs the implementation process and impact evaluation. Using a mixed-methods design, the evaluation tracks change over time and across the implementation period within each hospital. The evaluation therefore will encompass feedback on specific implementation processes and factors in microsystems where RED is adopted, in the larger organizational context, and interactions between the two.

This research study is being conducted by AHRQ through its contractor, BUMC, pursuant to AHRQ's statutory authority to conduct and support research on healthcare and disseminate information on systems for the delivery of such care, including activities with respect to the quality, effectiveness, efficiency, appropriateness and value of healthcare services and with respect to quality measurement and improvement. 42 U.S.C. 299(b) and 299a(a)(1) and (2).

Method of Collection

To achieve the projects' second and third goals, the following data collections and training will be implemented for the six hospitals that will receive more TA as well as the 4 hospitals receiving train-the-trainer TA, unless otherwise noted:

(1) Baseline needs assessment to help each hospital plan and prepare for implementation of the revised RED Toolkit and to evaluate it in varied settings. The baseline needs assessment will be administered by telephone, approximately two months prior to implementation, to the key contact at each of the ten study hospitals. The purpose of the assessment is to identify the implementation team, collect some basic information about the hospital, such as the number of beds and if electronic medical records are used, and to establish the baseline readmission rate.

(2) Monthly semi-structured interviews with the key contact or other implementation team member will be conducted monthly for 12 months after implementation. These interviews will be conducted by phone with each of the six hospitals receiving intensive technical assistance (TA) (the two levels of TA are described above). The purpose of these interviews are to allow hospitals to share their experiences with implementing the revised RED Toolkit, their use of specific tools, changes resulting from using the tools and problems encountered implementing the revised RED Toolkit and how they are being addressed.

(3) Baseline semi-structured interviews will be conducted prior to the implementation of the revised RED Toolkit with 15 hospital staff from each of the six study hospitals receiving intensive TA. The purpose of this interview is to measure the staffs opinion of the current discharge process, their perceived need for a redesigned process, and the perceived barriers and facilitators to redesigning the discharge process.

(4) Post implementation semi-structured interviews will be conducted 12 months after the implementation of the revised RED Toolkit with 15 hospital staff from each of the six study hospitals receiving intensive TA. The purpose of this interview is to measure the staffs opinion of the redesigned discharge process, which tools were used and their opinion of the tools, and the observed barriers and facilitators to redesigning the discharge process.

(5) Patient surveys will be administered by telephone to a random sample of patients 30 days after being discharged from one of the six intensive TA study hospitals. The purpose of this survey is to measure patient outcomes, including satisfaction with the care they received, 30-day hospital and emergency department visits, and physician appointments, to help determine the success of the RED Toolkit implementation in diverse patient populations. The survey will be administered by a hospital staff member to patients during the pre-implementation period and again during the post-implementation period to compare patient outcomes.

(6) Medical record review of patient outcomes at all ten study hospitals. This data collection will be conducted both pre- and postimplementation of the revised RED Toolkit and will inform the success of the revised RED Toolkit implementation in diverse patient populations. Outcomes to be collected include process outcomes, such as primary care provider appointments scheduled prior to discharge, and patient outcomes, such as 30-day hospital and emergency department visits.

(7) Master trainer training will be conducted with 3 staff members from each of the 4 hospitals receiving train-the-trainer TA. These people will be trained to administer the RED Toolkit and be able to use recorded Webinar training sessions within their organization. They will be invited to travel to BUMC for a 2-day onsite orientation of the RED intervention. These people will meet with several members of the BUMC implementation team (physician leader, discharge advocate nurse) and will have the opportunity to shadow the nurse discharge advocates in conducting the RED intervention.

(8) Intensive training will be conducted with about 28 staff from each of the 6 hospitals receiving intensive TA. The training will consist of a two-day on-site orientation and training at each hospital conducted by the BUMC implementation team. The BUMC implementation team will consist of a physician researcher, a discharge advocate nurse, an organizational change champion/evaluator and the information technology expert. The BUMC team will spend two days, 8 hours per day, to train the relevant hospital staff to perform the 11 components of the RED discharge. The training will include material for senior hospital management, hospital physicians, nurses, IT staff, and pharmacists.

Estimated Annual Respondent Burden

Exhibit 1 shows the estimated annualized burden hours associated with the respondent's time to participate in this research. The baseline needs assessment will be administered to the key contact at each of the 10 participating hospitals and takes about 2 hours to complete. Monthly semi-structured interviews with the key contact or other implementation team member will be conducted monthly for 12 months after implementation. These interviews will be conducted by phone with each of the six hospitals receiving intensive TA and will require 1 hour to complete. Both the base-line and post-implementation semi-structured interviews will be conducted with 15 staff members from each of the 6 hospitals receiving intensive TA and will last about one hour. The patient survey will be administered twice, pre and post implementation, to 3,108 patients recently discharged from one of the 6 hospitals receiving intensive TA and requires 10 minutes to complete. Medical record review will be performed at all 10 participating hospitals both pre- and post-implementation and will take about 41.6 hours. Master trainer training will be conducted with 3 staff members from each of the 4 hospitals receiving train the trainer TA and will last 16 hours. Intensive training will be conducted with about 28 staff members from each of the 6 hospitals receiving intensive TA and will also last 16 hours. The total annualized burden is estimated to be 5,020 hours.

Exhibit 2 shows the estimated annualized cost burden associated with the respondent's time to participate in this research. The total annualized cost burden is estimated to be $162,157.

EXHIBIT 1—ESTIMATED ANNUALIZED BURDEN HOURS

Form name	Number of respondents	Number of responses per respondent	Hours per response	Total burden hours
Baseline needs assessment	10	1	2	20
Monthly semi-structured interviews	6	12	1	72
Base-line semi-structured interview	6	15	1	90
Post implementation semi-structured interview	6	15	1	90
Patient survey	3,108	2	10/60	1,036
Medical record review	10	2	41.6	832
Master trainer training	4	3	16	192
Intensive training	6	28	16	2,688
Total	3,156	na	na	5,020

EXHIBIT 2—ESTIMATED ANNUALIZED COST BURDEN

Form name	Number of respondents	Total burden hours	Average hourly wage rate*	Total cost burden
Baseline needs assessment	10	20	[a] $41.94	$839
Monthly semi-structured interviews	6	72	[b] 40.91	2,946
Base-line semi-structured interview	6	90	[c] 38.51	3,466
Post implementation semi-structured interview	6	90	[d] 38.51	3,466
Patient survey	3,108	1,036	20.32	21,052
Medical record review	10	832	17.32	14,410
Master trainer training	4	192	[g] 31.31	6,012
Intensive training	6	2,688	[h] 40.91	109,966
Total	3,156	5,020	na	162,157

* Based upon the mean of the average wages, National Compensation Survey: Occupational wages in the United States May 2008, "U.S. Department of Labor, Bureau of Labor Statistics."

[a] 75% Nurses (29–1111, $31.31/hr), 20% Physicians (29–1069, $79.33/hr) and 5% General and Operations Managers (29–1069, $51.91/hr); [b] 80% Nurses and 20% Physicians; [c] and [d] 85% Nurses and 15% Physicians; [e] 100% General public (00–0000, $20.32/hr); [f] 100% Statistical assistants (43–9111, $17.32/hr); [g] 100% Nurses; [h] 80% Nurses and 20% Physicians.

Estimated Annual Costs to the Federal Government

Exhibit 3 shows the total and annualized cost over the 18 months of this clearance. The total cost is $449,976.

EXHIBIT 3—ESTIMATED TOTAL AND ANNUALIZED COST

Cost component	Total cost	Annual cost
Project RED Toolkit Development	$97,413	$64,942
Dissemination Planning and Support	98,080	65,387
Data Collection Activities	84,563	56,375
Data Processing and Analysis	52,215	34,810
Publication of Results	3,184	2,123
Project Management	28,892	19,261

EXHIBIT 3—ESTIMATED TOTAL AND ANNUALIZED COST—Continued

Cost component	Total cost	Annual cost
Overhead	85,629	57,086
Total	449,976	299,984

Request for Comments

In accordance with the above-cited Paperwork Reduction Act legislation, comments on AHRQ's information collection are requested with regard to any of the following: (a) Whether the proposed collection of information is necessary for the proper performance of AHRQ healthcare research and healthcare information dissemination functions, including whether the information will have practical utility; (b) the accuracy of AHRQ's estimate of burden (including hours and costs) of the proposed collection(s) of information; (c) ways to enhance the quality, utility, and clarity of the information to be collected; and (d) ways to minimize the burden of the collection of information upon the respondents, including the use of automated collection techniques or other forms of information technology.

Comments submitted in response to this notice will be summarized and included in the Agency's subsequent request for OMB approval of the proposed information collection. All comments will become a matter of public record.

Dated: June 8, 2010.

Carolyn M. Clancy,

Director.

[FR Doc. 2010–14864 Filed 6–18–10; 8:45 am]

BILLING CODE 4160–90–M

DEPARTMENT OF HEALTH AND HUMAN SERVICES

Centers for Disease Control and Prevention

[60-Day–10–10EG]

Proposed Data Collections Submitted for Public Comment and Recommendations

In compliance with the requirement of Section 3506(c)(2)(A) of the Paperwork Reduction Act of 1995 for opportunity for public comment on proposed data collection projects, the Centers for Disease Control and Prevention (CDC) will publish periodic summaries of proposed projects. To request more information on the proposed projects or to obtain a copy of the data collection plans and instruments, call 404–639–5960 and send comments to Maryam I. Daneshvar, CDC Acting Reports Clearance Officer, 1600 Clifton Road, MS–D74, Atlanta, GA 30333 or send an e-mail to *omb@cdc.gov.*

Comments are invited on: (a) Whether the proposed collection of information is necessary for the proper performance of the functions of the agency, including whether the information shall have practical utility; (b) the accuracy of the agency's estimate of the burden of the proposed collection of information; (c) ways to enhance the quality, utility, and clarity of the information to be collected; and (d) ways to minimize the burden of the collection of information on respondents, including through the use of automated collection techniques or other forms of information technology. Written comments should be received within 60 days of this notice.

Proposed Project

Audience Analysis for Biomonitoring—New—National Center for Environmental Health/Agency for Toxic Substances and Disease Registry (NCEH/ATSDR), Centers for Disease Control and Prevention (CDC).

Background and Brief Description

People's exposure to environmental chemicals can be a risk to their health. Scientists at the CDC use biomonitoring, which is the measurement of environmental chemicals in human tissues and fluids, to assess such exposure. Biomonitoring findings, however, do not typically provide information on health risks and toxicity data often lag behind new biomonitoring data. The health effects on humans are, therefore, often uncertain or unknown, particularly, for many new or "emerging" chemicals. Nevertheless, communicating biomonitoring findings for those charged with this task is necessary, especially due to the growing media coverage and public concern about chemicals found in the human body. The demand for answers and decreasing patience with uncertainty characterizes the interpretation of such results. This poses enormous challenges to those tasked to communicate such findings to both scientific and non-scientific audiences without a biomonitoring background.

The CDC is, therefore, interested in developing a framework for communicating health risk messages, particularly about emerging environmental chemicals, to the attentive public audience such as selected women who are pregnant or have very young children. The three environmental chemicals, Bisphenol A (BPA), phthalates, and mercury have been selected for this study. They are of particular interest to these selected women as the risks of exposure are higher for very young children because of their hand-to-mouth behaviors and direct oral (mouth) contact with materials containing these chemicals. Furthermore, young children eat and drink more per pound of body weight than adults.

Focus groups will be conducted in different parts of the country with selected women. During phase one, eight exploratory focus groups will be conducted to develop messaging strategies and the results will be used in the development of preliminary messages about the emerging chemicals. The second phase will include six message testing focus groups to determine which messages are most attractive and compelling in terms of communicating health risk information about emerging chemicals.

Participants will be recruited via standard focus group recruitment methods. Most will come from an existing database (or list) of potential participants maintained by the focus group facility. There is no cost to respondents.

ESTIMATED ANNUALIZED BURDEN HOURS

Respondents	Number of respondents	Number of responses per respondent	Average burden per response (in hours)	Total burden (in hours)
Recruitment screener	252	1	5/60	21
Exploratory Focus Groups	72	1	2	144
Message Testing Focus Groups	54	1	2	108
Total				273

Dated: June 3, 2010.

Maryam I. Daneshvar,

Reports Clearance Officer, Centers for Disease Control and Prevention.

[FR Doc. 2010–14873 Filed 6–18–10; 8:45 am]

BILLING CODE 4163–18–P

DEPARTMENT OF HEALTH AND HUMAN SERVICES

National Institutes of Health

National Institute of Child Health and Human Development; Revision to Proposed Collection; Comment Request; The National Children's Study (NCS), Vanguard (Pilot) Study

SUMMARY: Under the provisions of Section 3507(a)(1)(D) of the Paperwork Reduction Act of 1995, the National Institute of Child Health and Human Development (NICHD), the National Institutes of Health (NIH) has submitted to the Office of Management and Budget (OMB) a request for review and approval of the information collection listed below. This proposed information collection was previously published in the **Federal Register** on March 22, 2010, pages 14165–14168, and allowed 60 days for public comment. One comment was received. The comment questioned the value and utility of the proposed data collection, stating that this type of research is not needed. The purpose of this notice is to allow an additional 30 days for public comment. The National Institutes of Health may not conduct or sponsor, and the respondent is not required to respond to, an information collection that has been extended, revised, or implemented on or after October 1, 1995, unless it displays a currently valid OMB control number.

Proposed Collection: Title: Pilot Study for the National Children's Study, *Type of Information Collection Request:* Revision, *Affected entities:* Households and individuals. *Types of respondents:* People potentially affected by this action are pregnant women, women age 18–49 years of age, their husbands or partners, and their children who live in selected areas within National Children's Study sites. Health care professionals, community leaders, and child care personnel are also potentially affected. *Frequency of Response:* On occasion. See burden table for estimated number of annual responses for each respondent. *Need and use of information collection:* The purpose of the proposed methodological study is to evaluate the feasibility, acceptability, and cost of three separate recruitment strategies for enrollment of women into a prospective, national longitudinal study of child health and development. This Recruitment Substudy is a component of the Vanguard Phase of the National Children's Study (NCS). In combination, the studies in the Vanguard Phase will be used to inform the design of the Main Study of the National Children's Study.

This data collection will evaluate the feasibility, acceptability and cost of three separate recruitment strategies for enrollment of women into the NCS. Up to 30 additional sites will be added to the NCS Vanguard Cohort, as reflected in the burden table, in order to ensure an adequate cohort size. These additional sites will be chosen from among those already identified for the Main Study of the NCS. Across these additional sites, three alternate recruitment strategies will be assessed:

- An enhanced household enumeration strategy that builds on the lessons learned in the existing Vanguard Study by enhancing enumeration techniques and employing a more streamlined recruitment process;
- A provider based recruitment strategy that relies on health care providers for assistance in participant identification and recruitment; and
- A two-tiered recruitment strategy that relies on larger secondary sampling units to increase the number of geographically-eligible women in a given area, and allows for both higher-intensity and lower-intensity forms of data collection.

The feasibility (technical performance), acceptability (respondent tolerance and impact on study infrastructure), and cost (operations, time, and effort) of each of these three strategies will be evaluated using pre-determined measures. The findings will be assessed and used to inform the strategies, or combinations of strategies, that might be used in the Main Study of the NCS. Further details pertaining to the NCS background and planning can be found at: *http://www.nationalchildrensstudy.gov.*

Burden statement: The public burden for this study will vary depending on the eligibility and pregnancy status of potential participants at the time of household screening and the method of recruitment. The table below provides an annualized average burden per person for each stage of the Recruitment Substudy.

TABLE A.2—ESTIMATED HOUR BURDEN AND COST FOR RECRUITMENT SUBSTUDY RESPONDENTS—STAGE 1

[July 2010 to December 2010]

Recruitment strategy	Activity	Type of respondent	Number of respondents	Responses per respondent	Hours per response	Annual hour burden
Provider-based: 10 Study Locations			**Projected for Stage 1 (July 2010–December 2010)**			
	Screening Activities					
	Address Look-Up	Age-Eligible Women.	7,500	1	0.1	750

TABLE A.2—ESTIMATED HOUR BURDEN AND COST FOR RECRUITMENT SUBSTUDY RESPONDENTS—STAGE 1—Continued

[July 2010 to December 2010]

Recruitment strategy	Activity	Type of respondent	Number of respondents	Responses per respondent	Hours per response	Annual hour burden
	Pregnancy Screening	Age-Eligible Women.	1,500	1	0.42	630
	Preconception Activities					
	Pre-Pregnancy Interview	Age-Eligible Women.	123	1	0.75	92
	Pregnancy Probability Group Follow Up Script.	Age-Eligible Women.	123	6	0.1	74
	Pregnancy Activities					
	Women's Informed Consent Form.	Pregnant Women	1,500	1	0.67	1,005
	Pregnancy Visit 1 Interview	Pregnant Women	572	1	1	572
	Pregnancy Visit 2 Interview	Pregnant Women	572	1	0.75	429
	Birth-Related Activities					
	Birth Visit Interview	Mother/Baby	299	1	0.4	120
	Total—Stage 1		12,188			3,671
Enhanced Household: 10 Study Locations			**Projected for Stage 1 (July 2010–December 2010)**			
	Screening Activities					
	Household Enumeration Script.	HH reporters	120,000	1	0.33	39,600
	Pregnancy Screening	Age-Eligible Women.	51,198	1	0.42	21,503
	Neighbor Report	Neighbors	12,000	1	0.05	600
	Preconception Activities					
	Pre-Pregnancy Interview	Age-Eligible Women.	211	1	0.75	158
	Pregnancy Probability Group Follow Up Script.	Age-Eligible Women.	211	6	0.1	127
	Pregnancy Activities					
	Women's Informed Consent Form.	Pregnant Women	2,586	1	0.67	1,733
	Pregnancy Visit 1 Interview	Pregnant Women	986	1	1	986
	Pregnancy Visit 2 Interview	Pregnant Women	986	1	0.75	740
	Birth-Related Activities					
	Birth Visit Interview	Mother/Baby	516	1	0.4	206
	Total—Stage 1		188,695			65,653
Two Tier (Low): 10 Study Locations Across Both Tiers			**Projected for Stage 1 (July 2010–December 2010)**			
	Screening Activities					
	Low-intensity CATI Preg. Screener.	Age-Eligible Women.	48,000	1	0.35	16,800
	Low-Intensity Consent Script.	Age-Eligible Women.	28,800	1	0.33	9,504
	Preconception Activities					
	Low-intensity CATI Questionnaire.	Age-Eligible Women.	10,057	1	0.5	5,028
	Pregnancy Probability Group Follow Up Script.	Age-Eligible Women.	10,057	6	0.1	6,034
	Pregnancy Activities					
	Low-intensity CATI Questionnaire.	Pregnant Women	518	1	0.5	259
	Birth-Related Activities					
	Low-intensity CATI Questionnaire.	Mother/Baby	166	1	0.5	83
	Total—Stage 1		97,598			37,709
Two Tier (High): 10 Study Locations Across Both Tiers			**Projected for Stage 1 (July 2010–December 2010)**			
	Screening Activities					
	Pregnancy Screening	Age-Eligible Women.	15,840	1	0.42	6,653
	Preconception Activities					
	Pre-Pregnancy Interview	Age-Eligible Women.	761	1	0.75	571

TABLE A.2—ESTIMATED HOUR BURDEN AND COST FOR RECRUITMENT SUBSTUDY RESPONDENTS—STAGE 1—Continued

[July 2010 to December 2010]

Recruitment strategy	Activity	Type of respondent	Number of respondents	Responses per respondent	Hours per response	Annual hour burden
	Pregnancy Probability Group Follow Up Script.	Age-Eligible Women.	761	6	0.1	456
	Pregnancy Activities					
	Women's Informed Consent Form.	Pregnant Women ..	9,504	1	0.67	6,368
	Pregnancy Visit 1 Interview	Pregnant Women ..	3,552	1	1	3,552
	Pregnancy Visit 2 Interview	Pregnant Women ..	3,552	1	0.75	2,664
	Birth-Related Activities					
	Birth Visit Interview	Mother/Baby	1,857	1	0.4	743
	Total—Stage 1	.....	35,826	.....	.....	21,006
Grand Total, Recruitment Substudy		.....	334,308	.....	.....	128,039

The estimated annualized cost to respondents is $1,782,053 based on the differential hourly rate estimates in the above table. There are no Capital Costs to report. There are no Operating or Maintenance Costs to report.

Request for Comments: Written comments and/or suggestions from the public and affected agencies are invited on one or more of the following points: (1) Whether the proposed collection of information is necessary for the proper performance of the function of the agency, including whether the information will have practical utility; (2) The accuracy of the agency's estimate of the burden of the proposed collection of information, including the validity of the methodology and assumptions used; (3) Ways to enhance the quality, utility, and clarity of the information to be collected; and (4) Ways to minimize the burden of the collection of information on those who are to respond, including the use of appropriate automated, electronic, mechanical, or other technological collection techniques or other forms of information technology.

FOR FURTHER INFORMATION CONTACT: Written comments and/or suggestions regarding the item(s) contained in this notice, especially regarding the estimated public burden and associated response time, should be directed to the: Office of Management and Budget, Office of Regulatory Affairs, New Executive Office Building, Room 10235, Washington, DC 20503, *Attention:* Desk Officer for NIH. To request more information on the proposed project or to obtain a copy of the data collection plans and instruments, contact: Jamelle E. Banks, M.P.H., National Institute of Child Health and Human Development, 31 Center Drive, Room 2A18, Bethesda, Maryland, 20892, or call non-toll free number (301) 443–7210, or e-mail your request, including your address to *banksj@mail.nih.gov.*

Comments Due Date: Comments regarding this information collection are best assured of having their full effect if received within 30-days of the date of this publication.

Dated: June 15, 2010.

Jamelle E. Banks,

NICHD Project Clearance Liaison, National Institutes of Health.

[FR Doc. 2010–14969 Filed 6–18–10; 8:45 am]

BILLING CODE 4140–01–P

DEPARTMENT OF HEALTH AND HUMAN SERVICES

Food and Drug Administration

[Docket No. FDA–2010–N–0002]

Notice of Approval of a Supplemental New Animal Drug Application; Penicillin G Procaine Suspension

AGENCY: Food and Drug Administration, HHS.

ACTION: Notice.

SUMMARY: The Food and Drug Administration (FDA) is providing notice that it has approved a supplemental new animal drug application (NADA) filed by Norbrook Laboratories, Ltd. The supplemental NADA provides for a revised formulation of penicillin G procaine injectable suspension that includes lecithin as a surfactant.

FOR FURTHER INFORMATION CONTACT: Cindy L. Burnsteel, Center for Veterinary Medicine (HFV–130), Food and Drug Administration, 7500 Standish Pl., Rockville, MD 20855, 240–276–8341, e-mail: *cindy.burnsteel@fda.hhs.gov.*

SUPPLEMENTARY INFORMATION: Norbrook Laboratories, Ltd., Station Works, Newry BT35 6JP, Northern Ireland, filed a supplement to NADA 065–010 for use of NOROCILLIN (penicillin G procaine) Injectable Suspension by intramuscular injection in cattle, sheep, swine, and horses. The supplement provides for a revised formulation that includes lecithin as a surfactant. In accordance with section 512(i) of the Federal Food, Drug, and Cosmetic Act (the act) (21 U.S.C. 360b(i)) and part 514 (21 CFR 514), in §§ 514.105(a) and 514.106(a), the Center for Veterinary Medicine is providing notice that this supplemental NADA is approved as of April 23, 2010.

In accordance with the freedom of information provisions of 21 CFR part 20 and 21 CFR 514.11(e)(2)(ii), a summary of safety and effectiveness data and information submitted to support approval of this application may be seen in the Division of Dockets Management (HFA–305), Food and Drug Administration, 5630 Fishers Lane, rm. 1061, Rockville, MD 20852, between 9 a.m. and 4 p.m., Monday through Friday.

Under section 512(c)(2)(F)(iii) of the act (21 U.S.C. 360b(c)(2)(F)(iii)), this supplemental approval qualifies for 3 years of marketing exclusivity beginning on the date of approval.

FDA has determined under 21 CFR 25.33 that this action is of a type that does not individually or cumulatively have a significant effect on the human environment. Therefore, neither an environmental assessment nor an environmental impact statement is required.

Dated: June 15, 2010.

Elizabeth Rettie,

Deputy Director, Office of New Animal Drug Evaluation, Center for Veterinary Medicine.

[FR Doc. 2010–14865 Filed 6–18–10; 8:45 am]

BILLING CODE 4160–01–S

DEPARTMENT OF HEALTH AND HUMAN SERVICES

Food and Drug Administration

[Docket No. FDA–2009–N–0277]

Authorization of Emergency Use of Certain In Vitro Diagnostic Devices; Availability

AGENCY: Food and Drug Administration, HHS.

ACTION: Notice.

SUMMARY: The Food and Drug Administration (FDA) is announcing the issuance of seven Emergency Use Authorizations (EUAs) (the Authorizations), two of which were amended after initial issuance, for certain in vitro diagnostic devices. FDA is issuing the Authorizations and amendments thereto under the Federal Food, Drug, and Cosmetic Act (the act). The Authorizations contain, among other things, conditions on the emergency use of the authorized in vitro diagnostics. The Authorizations follow the determination by the then Acting Secretary of the U.S. Department of Health and Human Services Charles E. Johnson (the Acting Secretary) that a public health emergency exists involving Swine Influenza A (now known as 2009 H1N1 Influenza A, or 2009 H1N1 flu) that affects, or has the significant potential to affect, national security. On the basis of such determination, the Acting Secretary declared an emergency justifying the authorization of the emergency use of certain in vitro diagnostics, accompanied by emergency use information subject to the terms of any authorization issued under the act. The Authorizations, which include explanations of the reasons for their issuance or reissuance, are reprinted in this document.

DATES: See the **SUPPLEMENTARY INFORMATION** section of this document for effective dates of the Authorizations.

ADDRESSES: Submit written requests for single copies of the Emergency Use Authorization(s) to the Office of Counterterrorism and Emerging Threats, Food and Drug Administration, 10903 New Hampshire Ave., Bldg. 32, rm. 4140, Silver Spring, MD 20993. Send one self-addressed adhesive label to assist that office in processing your request or include a fax number to which the Authorization(s) may be sent. See the **SUPPLEMENTARY INFORMATION** section for electronic access to the Authorizations.

FOR FURTHER INFORMATION CONTACT: RADM Boris Lushniak, Office of Counterterrorism and Emerging Threats, Food and Drug Administration, 10903 New Hampshire Ave., Bldg. 32, rm. 4140, Silver Spring, MD 20993, 301–796–8510.

SUPPLEMENTARY INFORMATION:

I. Background

Section 564 of the act (21 U.S.C. § 360bbb–3), as amended by the Project BioShield Act of 2004 (Public Law 108–276), allows FDA to strengthen the public health protections against biological, chemical, nuclear, and radiological agents. Among other things, section 564 of the act allows FDA to authorize the use of an unapproved medical product or an unapproved use of an approved medical product during a public health emergency that affects, or has a significant potential to affect, national security, and that involves biological, chemical, radiological, or nuclear agent or agents, or a specified disease or condition that may be attributable to such agent or agents. With this EUA authority, FDA can help assure that medical countermeasures may be used in an emergency to diagnose, treat, or prevent serious or life-threatening diseases or conditions caused by such agents, when there are no adequate, approved, and available alternatives.

Section 564(b)(1) of the act provides that, before an EUA may be issued, the Secretary must declare an emergency justifying the authorization based on one of the following grounds:

(1) A determination by the Secretary of Homeland Security that there is a domestic emergency, or a significant potential for a domestic emergency, involving a heightened risk of attack with a specified biological, chemical, radiological, or nuclear agent or agents;

(2) A determination by the Secretary of Defense that there is a military emergency, or a significant potential for a military emergency, involving a heightened risk to United States military forces of attack with a specified biological, chemical, radiological, or nuclear agent or agents; or

(3) A determination by the Secretary of a public health emergency under section 319 of the Public Health Service Act (PHS Act) (42 U.S.C. 247d) that affects, or has a significant potential to affect, national security, and that involves a specified biological, chemical, radiological, or nuclear agent or agents, or a specified disease or condition that may be attributable to such agent or agents.

Once the Secretary has declared an emergency justifying an authorization under section 564 of the act, FDA may authorize the emergency use of a drug, device, or biological product if the agency concludes that the statutory criteria are satisfied. Under section 564(h)(1) of the act, FDA is required to publish in the **Federal Register** a notice of each authorization, and each termination or revocation of an authorization, and an explanation of the reasons for the action. Section 564 of the act permits FDA to authorize the introduction into interstate commerce of a drug, device, or biological product intended for use in a declared emergency. Products appropriate for emergency use may include products and uses that are not approved, cleared, or licensed under sections 505, 510(k), and 515 of the act (21 U.S.C. 355, 360(k), and 360e, respectively) or section 351 of the PHS Act (42 U.S.C. 262). FDA may issue an EUA only if, after consultation with the National Institutes of Health and the Center for Disease Control and Prevention (to the extent feasible and appropriate given the circumstances of the emergency), FDA[1] concludes:

(1) that an agent specified in a declaration of emergency can cause a serious or life-threatening disease or condition;

(2) that, based on the totality of scientific evidence available to FDA, including data from adequate and well-controlled clinical trials, if available, it is reasonable to believe that:

(A) the product may be effective in diagnosing, treating, or preventing—

(1) such disease or condition; or

(2) a serious or life-threatening disease or condition caused by a product authorized under section 564 of the act, approved or cleared under the act, or licensed under section 351 of the PHS Act, for diagnosing, treating, or preventing such a disease or condition caused by such an agent; and

(B) the known and potential benefits of the product, when used to diagnose, prevent, or treat such disease or condition, outweigh the known and potential risks of the product;

(3) that there is no adequate, approved, and available alternative to the product for diagnosing, preventing, or treating such disease or condition; and

[1] The Secretary has delegated his authority to issue an EUA under section 564 of the act to the Commissioner of Food and Drugs.

(4) that such other criteria as the Secretary may by regulation prescribe are satisfied.

No other criteria of issuance have been prescribed by regulation under section 564(c)(4) of the act. Because the statute is self-executing, FDA does not require regulations or guidance to implement the EUA authority. However, FDA published guidance in July 2007 entitled "Emergency Use Authorization of Medical Products" to provide more information for stakeholders and the public about the EUA authority and the agency's process for the consideration of EUA requests.

II. EUA Request for Certain In Vitro Diagnostic Products

On April 26, 2009, under section 564(b)(1)(C) of the act (21 U.S.C. 360bbb-3(b)(1)(C)), the Acting Secretary determined that a public health emergency exists involving Swine Influenza A (now known as 2009 H1N1 Influenza A, or 2009 H1N1 flu) that affects, or has the significant potential to affect, national security. The determination has been renewed. On April 26, 2009, under section 564(b) of the act, and on the basis of such determination, the Acting Secretary declared an emergency justifying the authorization of certain in vitro diagnostics for detection of Swine Influenza A (2009 H1N1 flu), accompanied by emergency use information subject to the terms of any authorization issued under 21 U.S.C. 360bbb-3(a). Notice of the determination and the declaration of the Acting Secretary was published in the **Federal Register** on August 4, 2009 (74 FR 38628).

(1) On January 21, 2010, in response to a request from ViraCor Laboratories, FDA issued an EUA for the ViraCor 2009 H1N1 Influenza A Real-time RT–PCR test with certain written information, including fact sheets for healthcare providers and patients, which are authorized under the EUA. The Authorization letter, which includes an explanation for its issuance, is reprinted in this document.

(2) On November 13, 2009, in response to a request from Epoch BioSciences, FDA issued an EUA for the ELITech Molecular Diagnostics 2009–H1N1 Influenza A virus Real-Time RT–PCR test for distribution to Associated Regional and University Pathologists (ARUP) Laboratories, with certain written information, including fact sheets for healthcare providers and patients, which are authorized under the EUA. On April 19, 2010, notice of the initial Authorization was published in the **Federal Register** (75 FR 20441). On February 1, 2010, in response to a request from Epoch BioSciences, FDA amended the Authorization letter to authorize use of additional upper respiratory tract samples and lower respiratory tract specimens, and for other reasons, and reissued the Authorization letter in its entirety. The Authorization letter, as amended and reissued on February 1, 2009, which includes an explanation for its reissuance, is reprinted in this document. The original August 2009 Authorization letter is not reprinted in this document.

(3) On February 16, 2010, in response to a request from Longhorn Vaccines and Diagnostics, FDA issued an EUA for the Longhorn Influenza A/H1N1–09 Prime RRT–PCR Assay with certain written information, including fact sheets for healthcare providers and patients, which are authorized under the EUA. On March 23, 2010, in response to a request from Longhorn Vaccines and Diagnostics, FDA amended the Authorization letter to authorize use of additional upper respiratory tract samples and for other reasons, and reissued the Authorization letter in its entirety. The Authorization letter, as amended and reissued on March 23, 2010, which includes an explanation for its original issuance and its reissuance, is reprinted in this document. The original February 16, 2010 Authorization letter is not reprinted in this document.

(4) On February 16, 2010, in response to a request from Diagnostic Hybrids, Inc., FDA issued an EUA for the Diagnostic Hybrids, Inc. D^3 Ultra 2009 H1N1 Influenza A Virus ID Kit with certain written information, including fact sheets for healthcare providers and patients, which are authorized under the EUA. The Authorization letter, which includes an explanation for its issuance, is reprinted in this document.

(5) On March 11, 2010, in response to a request from Qiagen, FDA issued an EUA for the *artus*® Inf. A H1N1 2009 LC RT–PCR Kit with certain written information, including fact sheets for healthcare providers and patients, which are authorized under the EUA. The Authorization letter, which includes an explanation for its issuance, is reprinted in this document.

(6) On March 22, 2010, in response to a request from IntelligentMDX, FDA issued an EUA for the IMDx 2009 Influenza A H1N1 Real-Time RT–PCR Assay with certain written information, including fact sheets for healthcare providers and patients, which are authorized under the EUA. The Authorization letter, which includes an explanation for its issuance, is reprinted in this document.

(7) On May 4, 2010, in response to a request from IQuum, Inc., FDA issued an EUA for the Liat Influenza A/2009 H1N1 Assay with certain written information, including fact sheets for healthcare providers and patients, which are authorized under the EUA. The Authorization letter, which includes an explanation for its issuance, is reprinted in this document.

III. Electronic Access

An electronic version of this document and the full text of the Authorizations are available on the Internet at *http://www.regulations.gov*.

IV. The Authorizations

Having concluded that the criteria for issuance of the Authorizations, one as amended, under section 564(c) of the act are met, FDA has authorized the emergency use of certain in vitro diagnostic devices.

(1) The Authorization for ViraCor 2009 H1N1 Influenza A Real-time RT–PCR test issued on January 21, 2010, follows and provides an explanation of the reasons for its issuance, as required by section 564(h)(1) of the act:

Renée Forsberg, ASQ CQA
Director, Regulatory Affairs and Quality Assurance
ViraCor Laboratories
1001 NW Technology Drive
Lee's Summit, MO 64086

Dear Ms. Forsberg:

This letter is in response to your request that the Food and Drug Administration (FDA) issue an Emergency Use Authorization (EUA) for emergency use of the ViraCor 2009 H1N1 Influenza A Real-time RT-PCR test by ViraCor Laboratories for the diagnosis of 2009 H1N1 influenza virus infection in patients with signs and symptoms of respiratory infection, pursuant to section 564 of the Federal Food, Drug, and Cosmetic Act (the Act) (21 U.S.C. § 360bbb-3). ViraCor Laboratories is certified under the Clinical Laboratory Improvement Amendments of 1988, 42 U.S.C. § 263a, to perform high complexity tests (a CLIA High Complexity Laboratory).

On April 26, 2009, pursuant to section 564(b)(1)(C) of the Act (21 U.S.C. § 360bbb-3(b)(1)(C)), the Secretary of the Department of Health and Human Services (HHS) determined that there is a public health emergency under 42 U.S.C. § 247d that affects, or has a significant potential to affect, national security, and that involves a specified biological, chemical, radiological, or nuclear agent or agents, or a specified disease or condition that may be attributable to such an agent or agents - in this case, 2009 H1N1 influenza virus.[1] Pursuant to section 564(b) of the Act (21 U.S.C. § 360bbb-3(b)), and on the basis of such determination, the Secretary of HHS then declared an emergency justifying the authorization of the emergency use of certain in vitro diagnostics for the detection of 2009 H1N1 influenza virus, subject to the terms of any authorization issued under 21 U.S.C. § 360bbb-3(a).

Having concluded that the criteria for issuance of this authorization under section 564(c) of the Act (21 U.S.C. § 360bbb-3(c)) are met, I am authorizing the emergency use of the ViraCor 2009 H1N1 Influenza A Real-time RT-PCR test (as described in the scope section of this letter (Section II)) for the diagnosis of 2009 H1N1 influenza virus infection in individuals with signs and symptoms of respiratory infection, subject to the terms of this authorization.

I. Criteria for Issuance of Authorization

I have concluded that the emergency use of the ViraCor 2009 H1N1 Influenza A Real-time RT-PCR test for the diagnosis of 2009 H1N1 influenza virus infection in individuals with signs and symptoms of respiratory infection meets the criteria for issuance of an authorization under section 564(c) of the Act, because I have concluded that:

1. The 2009 H1N1 influenza virus can cause influenza, a serious or life threatening disease or condition to humans infected by this virus;

2. Based on the totality of scientific evidence available to FDA, it is reasonable to believe that the ViraCor 2009 H1N1 Influenza A Real-time RT-PCR test may be effective for the diagnosis of 2009 H1N1 influenza virus infection, and that the known and potential benefits of the ViraCor 2009 H1N1 Influenza A Real-time RT-PCR test, when used in the diagnosis of 2009 H1N1 influenza virus infection, outweigh the known and potential risks of such product; and

3. There is no adequate, approved, and available alternative to the emergency use of the ViraCor 2009 H1N1 Influenza A Real-time RT-PCR test for the diagnosis of 2009 H1N1 influenza virus infection.[2]

II. Scope of Authorization

I have concluded, pursuant to section 564(d)(1) of the Act, that the scope of this authorization is limited to ViraCor Laboratories' use of the authorized ViraCor 2009 H1N1 Influenza A Real-time RT-PCR test for the diagnosis of 2009 H1N1 influenza virus infection in individuals with signs and symptoms of respiratory infection.

The Authorized ViraCor 2009 H1N1 Influenza A Real-time RT-PCR test:

The ViraCor 2009 H1N1 Influenza A Real-time RT-PCR test is a real-time reverse transcriptase PCR (rRT-PCR) for the *in vitro* qualitative detection of 2009 H1N1 influenza viral RNA in upper respiratory tract specimens (such as nasopharyngeal swabs (NPS), nasal swabs (NS), throat swabs (TS), nasal aspirates (NA), nasal washes (NW), and dual nasopharyngeal/throat swabs (NPS/TS)), and lower respiratory tract specimens (such as broncheoalveolar lavage (BAL), bronchial aspirate (BA), bronchial wash (BW), endotracheal aspirate (EA), endotracheal wash (EW), tracheal aspirate (TA), and lung tissue) from patients with signs and symptoms of respiratory infection. The testing procedure consists of nucleic acid extraction on the NucliSENS® easyMAG® system (bioMérieux, Inc.) followed by rRT-PCR on the Applied Biosystems 7500 Real-Time PCR System.

The ViraCor 2009 H1N1 Influenza A Real-time RT-PCR test includes the following primer and probe sets:
- **INFA:** detects a conserved region of the matrix (M) gene that is present in both seasonal and 2009 H1N1 influenza A viruses.
- **2009 H1N1**: detects a region of the hemagglutinin (H) gene found in the 2009 H1N1 influenza virus. This primer/probe set may react with other swine origin influenza A strains.
- **IC (Internal Control)**: detects an RNA sequence in whole bacteriophage MS2 that is noncompetitive with the INFA and 2009 H1N1 2009 targets.

The ViraCor 2009 H1N1 Influenza A Real-time RT-PCR test also includes the following control materials:
- **Bacteriophage MS2 Internal Control (IC)** is added to every patient sample and is carried through all steps of the procedure from nucleic acid isolation and purification through amplification to ensure that effective nucleic acid extraction is achieved and to monitor for inhibition of rRT-PCR.
- **Negative Control** consists of a known negative sample and is taken through both nucleic acid extraction and rRT-PCR processes to demonstrate that all extraction and amplification reagents are free of target RNA and amplicons and to ensure that detection of target genes is not due to false positive results.
- **Positive Controls** consist of separate in vitro transcribed RNAs containing targets recognized by the INFA and 2009 H1N1 detection systems and are included in each rRT-PCR run to demonstrate that these detection systems are operating at the required level of sensitivity.

The ViraCor 2009 H1N1 Influenza A Real-time RT-PCR test requires the following hardware with corresponding software:
- Applied Biosystems 7500 Real-Time PCR System with ABI Software: SDS software version 1.4.
- bioMérieux NucliSENS® easyMAG® extraction system with software version 2.0

The ViraCor 2009 H1N1 Influenza A Real-time RT-PCR test requires the use of the following additional reagents/materials:

- SuperScript™ III Platinum® One-Step qRT-PCR kit (Invitrogen Cat. No. 11732-088)
- Extraction Reagents for NucliSENS® easyMAG® system (bioMérieux Cat. Nos. 280130, 280131, 280132, 280133, 280134).

The above described ViraCor 2009 H1N1 Influenza A Real-time RT-PCR test, when labeled consistently with the labeling authorized by FDA, entitled ViraCor 2009 H1N1 Influenza A Real-time RT-PCR Package Insert (available at *http://www.fda.gov/MedicalDevices/Safety/EmergencySituations/ucm161496.htm*), as may be revised with written permission of FDA, is authorized to be used by ViraCor Laboratories,[3] under this EUA, despite the fact that it does not meet certain requirements otherwise required by federal law.

The above described ViraCor 2009 H1N1 Influenza A Real-time RT-PCR test is authorized to be accompanied by the following information pertaining to the emergency use, which is authorized to be made available to healthcare providers and patients:

- Fact Sheet for Healthcare Providers: Interpreting ViraCor 2009 H1N1 Influenza A Real-time RT-PCR Test Results

- Fact Sheet for Patients: Understanding ViraCor 2009 H1N1 Influenza A Real-time RT-PCR Test Results

As described in section IV below, ViraCor Laboratories is also authorized to make available additional information relating to the emergency use of the authorized ViraCor 2009 H1N1 Influenza A Real-time RT-PCR test that is consistent with, and does not exceed, the terms of this letter of authorization.

I have concluded, pursuant to section 564(d)(2) of the Act, that it is reasonable to believe that the known and potential benefits of the authorized ViraCor 2009 H1N1 Influenza A Real-time RT-PCR test in the specified population, when used for diagnosis of 2009 H1N1 influenza virus infection, outweigh the known and potential risks of such a product.

I have concluded, pursuant to section 564(d)(3) of the Act, based on the totality of scientific evidence available to FDA, that it is reasonable to believe that the authorized ViraCor 2009 H1N1 Influenza A Real-time RT-PCR test may be effective in the diagnosis of 2009 H1N1 influenza virus infection pursuant to section 564(c)(2)(A) of the Act. The FDA has reviewed the scientific information available including the information supporting the conclusions described in Section I above, and concludes that the authorized ViraCor 2009 H1N1 Influenza A Real-time RT-PCR test, when used to diagnose 2009 H1N1 influenza virus infection in the specified population, meets the criteria set forth in section 564(c) of the Act concerning safety and potential effectiveness.

The emergency use of the authorized ViraCor 2009 H1N1 Influenza A Real-time RT-PCR test under this EUA must be consistent with, and may not exceed, the terms of this letter, including the scope and the conditions of authorization set forth below. Subject to the terms of this EUA and under the circumstances set forth in the Secretary of HHS's determination under section 564(b)(1)(C) described above and the Secretary of HHS's corresponding declaration under section 564(b)(1), the ViraCor 2009 H1N1 Influenza A Real-time RT-PCR test described above is authorized to diagnose 2009 H1N1 influenza virus infection in individuals with signs and symptoms of respiratory infection.

This EUA will cease to be effective when the declaration of emergency is terminated under section 564(b)(2) of the Act or when the EUA is revoked under section 564(g) of the Act.

III. Waiver of Certain Requirements

I am waiving the following requirements for the ViraCor 2009 H1N1 Influenza A Real-time RT-PCR test during the duration of this emergency use authorization:

- Current good manufacturing practice requirements, including the quality system requirements under 21 CFR Part 820 with respect to the design, manufacture, packaging, labeling, storage, and distribution of the ViraCor 2009 H1N1 Influenza A Real-time RT-PCR test.

- Labeling requirements for cleared, approved, or investigational devices, including labeling requirements under 21 CFR 809.10 and 809.30, except for the intended use statement (21 CFR 809.10(a)(2), (b)(2)), adequate directions for use (21 U.S.C. 352(f)), (21 CFR 809.10(b)(5) and (8)), any appropriate limitations on the use of the device including information required under 21 CFR 809.10(a)(4), and any available information regarding performance of the device, including requirements under 21 CFR 809.10(b)(12).

IV. Conditions of Authorization

Pursuant to section 564 of the Act, I am establishing the following conditions on this authorization:

ViraCor Laboratories

A. ViraCor Laboratories, Inc., will not sell or distribute the ViraCor 2009 H1N1 Influenza A Real-time RT-PCR test to other laboratories.

B. ViraCor Laboratories will include with reports of the results of the ViraCor 2009 H1N1 Influenza A Real-time RT-PCR test the authorized ViraCor 2009 H1N1 Influenza A Real-time RT-PCR test Fact Sheet for Healthcare Providers and the authorized ViraCor 2009 H1N1 Influenza A Real-time RT-PCR test Fact Sheet for Patients.

C. ViraCor Laboratories will make available on its Web site the authorized ViraCor 2009 H1N1 Influenza A Real-time RT-PCR test Fact Sheet for Healthcare Providers and the authorized ViraCor 2009 H1N1 Influenza A Real-time RT-PCR test Fact Sheet for Patients.

D. ViraCor Laboratories will clearly and conspicuously state on reports of the results of the ViraCor 2009 H1N1 Influenza A Real-time RT-PCR test that this test is only authorized for the diagnosis of 2009 H1N1 influenza virus and not for seasonal influenza A, B, or any other virus or pathogen.

E. ViraCor Laboratories will inform state and/or local public health authority(ies) of this EUA, including the terms and conditions herein.

F. All advertising and promotional descriptive printed matter relating to the use of the authorized ViraCor 2009 H1N1 Influenza A Real-time RT-PCR test shall be consistent with the Fact Sheets and authorized labeling, as well as the terms set forth in this EUA and other requirements set forth in the Act and FDA regulations.

G. All advertising and promotional descriptive printed matter relating to the use of the authorized ViraCor 2009 H1N1 Influenza A Real-time RT-PCR test shall clearly and conspicuously state that:

- This test has not been FDA cleared or approved;
- This test has been authorized by FDA under an Emergency Use Authorization;
- This test has been authorized only for the detection of 2009 H1N1 influenza virus and not for any other viruses or pathogens;
- This test is only authorized for the duration of the declaration of emergency under section 564(b)(1) of the Federal Food, Drug, and Cosmetic Act, 21 U.S.C. § 360bbb-3(b)(1); and
- The declaration of emergency will expire on April 26, 2010, unless it is terminated or revoked sooner or renewed.

H. No advertising or promotional descriptive printed matter relating to the use of the authorized ViraCor 2009 H1N1 Influenza A Real-time RT-PCR test may represent or suggest that this test is safe or effective for the diagnosis of 2009 H1N1 influenza virus.

I. ViraCor Laboratories will have a process in place for reporting test results to healthcare providers and federal, state and/or local public health authorities, as appropriate.

J. ViraCor Laboratories will track adverse events and report to FDA as required under 21 CFR part 803.

K. Through a process of inventory control, ViraCor Laboratories will maintain records of device usage.

L. ViraCor Laboratories will collect information on the performance of the assay and report to FDA any suspected occurrence of false positive or false negative results of which ViraCor Laboratories becomes aware.

M. ViraCor Laboratories is authorized to make available additional information relating to the emergency use of the authorized ViraCor 2009 H1N1 Influenza A Real-time RT-PCR test that is consistent with, and does not exceed, the terms of this letter of authorization.

N. Only ViraCor Laboratories may request changes to the authorized ViraCor 2009 H1N1 Influenza A Real-time RT-PCR test Fact Sheet for Healthcare Providers or the authorized ViraCor 2009 H1N1 Influenza A Real-time RT-PCR test Fact Sheet for Patients. Such requests will be made by contacting FDA concerning FDA review and approval.

O. ViraCor Laboratories will perform the authorized ViraCor 2009 H1N1 Influenza A Real-time RT-PCR test on the bioMérieux NucliSENS® easyMAG® extraction system with software version 2.0 and Applied Biosystems 7500 Real-Time PCR System with SDS software version 1.4.

P. ViraCor Laboratories will ensure that any records associated with this EUA are maintained until notified by FDA. Such records will be made available to FDA for inspection upon request.

The emergency use of the authorized ViraCor 2009 H1N1 Influenza A Real-time RT-PCR test as described in this letter of authorization must comply with the conditions above and all other terms of this authorization.

V. Duration of Authorization

This EUA will be effective until the declaration of emergency is terminated under section 564(b)(2) of the Act or the EUA is revoked under section 564(g) of the Act

Margaret A. Hamburg, M.D.
Commissioner of Food and Drugs

[1] Memorandum, Determination Pursuant to § 564 of the Federal Food, Drug, and Cosmetic Act (April 26, 2009).
[2] No other criteria of issuance have been prescribed by regulation under section 564(c)(4) of the Act.
[3] This EUA does not authorize the ViraCor 2009 H1N1 Influenza A Real-time RT-PCR test to be sold or distributed to or used by other laboratories.

(2) The Authorization for the ELITech Molecular Diagnostics 2009–H1N1 Influenza A virus Real-Time RT–PCR test issued on November 13, 2009, as amended and reissued in its entirety on February 1, 2010, follows and provides an explanation of the reasons for its issuance, as required by section 564(h)(1) of the act:

Dr. Walt Mahoney
VP R&D and Operations
Managing Director
Epoch BioSciences
21720 23rd Drive S.E. Suite 150
Bothell, WA 98021

Dear Dr. Mahoney:

On November 13, 2009 FDA issued a letter authorizing the emergency use of the ELITech Molecular Diagnostics 2009-H1N1 Influenza A virus Real-Time RT-PCR test for the diagnosis of 2009 H1N1 influenza virus infection, pursuant to section 564 of the Federal Food, Drug, and Cosmetic Act (the Act) (21 U.S.C. § 360bbb-3) by laboratories certified under the Clinical Laboratory Improvement Amendments of 1988, 42 U.S.C. § 263a, to perform high complexity tests (CLIA High Complexity Laboratories). On December 22, 2009, Epoch Biosciences submitted a request for an amendment to the Emergency Use Authorization. In response to that request, the letter authorizing emergency use of the ELITech Molecular Diagnostics 2009-H1N1 Influenza A virus Real-Time RT-PCR test is being reissued in its entirety with the amendments incorporated.[1]

On April 26, 2009, pursuant to section 564(b)(1)(C) of the Act (21 U.S.C. § 360bbb-3(b)(1)(C)), the Secretary of the Department of Health and Human Services (HHS) determined that there is a public health emergency under 42 U.S.C. § 247d that affects, or has a significant potential to affect, national security, and that involves a specified biological, chemical, radiological, or nuclear agent or agents, or a specified disease or condition that may be attributable to such an agent or agents - in this case, 2009 H1N1 influenza virus.[2] Pursuant to section 564(b) of the Act (21 U.S.C. § 360bbb-3(b)), and on the basis of such determination, the Secretary of HHS then declared an emergency justifying the authorization of the emergency use of certain in vitro diagnostics for the detection of 2009 H1N1 influenza virus, subject to the terms of any authorization issued under 21 U.S.C. § 360bbb-3(a).

Having concluded that the criteria for issuance of this authorization under section 564(c) of the Act (21 U.S.C. § 360bbb-3(c)) are met, I am authorizing the emergency use of the ELITech Molecular Diagnostics 2009-H1N1 Influenza A virus Real-Time RT-PCR test for the diagnosis of 2009 H1N1 influenza virus infection in individuals with signs and symptoms of respiratory infection, subject to the terms of this authorization.

I. Criteria for Issuance of Authorization

I have concluded that the emergency use of the ELITech Molecular Diagnostics 2009-H1N1 Influenza A virus Real-Time RT-PCR test for the diagnosis of 2009 H1N1 influenza virus infection in individuals with signs and symptoms of respiratory infection meets the criteria for issuance of an authorization under section 564(c) of the Act, because I have concluded that:

1. The 2009 H1N1 influenza virus can cause influenza, a serious or life threatening disease or condition to humans infected by this virus;

2. Based on the totality of scientific evidence available to FDA, it is reasonable to believe that the ELITech Molecular Diagnostics 2009-H1N1 Influenza A virus Real-Time RT-PCR test may be effective for the diagnosis of 2009 H1N1 influenza virus infection, and that the known and potential benefits of the ELITech Molecular Diagnostics 2009-H1N1 Influenza A virus Real-Time RT-PCR test, when used in the diagnosis of 2009 H1N1 influenza virus infection, outweigh the known and potential risks of such product; and

3. There is no adequate, approved, and available alternative to the emergency use of the ELITech Molecular Diagnostics 2009-H1N1 Influenza A virus Real-Time RT-PCR test for the diagnosis of 2009 H1N1 influenza virus infection.[3]

II. Scope of Authorization

I have concluded, pursuant to section 564(d)(1) of the Act, that the scope of this authorization is limited to the use of the authorized ELITech Molecular Diagnostics 2009-H1N1 Influenza A virus Real-Time RT-PCR test for the diagnosis of 2009 H1N1 influenza virus infection in individuals with signs and symptoms of respiratory infection.

The Authorized ELITech Molecular Diagnostics 2009-H1N1 Influenza A virus Real-Time RT-PCR Test:

The ELITech Molecular Diagnostics 2009-H1N1 Influenza A virus Real-Time RT-PCR test is a real-time reverse-transcription PCR for the *in vitro* qualitative detection of 2009 H1N1 influenza viral RNA in upper respiratory tract specimens (such as nasopharyngeal swabs (NPS), nasal swabs (NS), throat swabs (TS), nasal aspirates (NA), nasal washes (NW), and dual nasopharyngeal/throat swabs (NPS/TS)), and lower respiratory tract specimens (such as broncheoalveolar lavage (BAL), bronchial aspirate (BA), bronchial wash (BW), endotracheal aspirate (EA), endotracheal wash (EW), tracheal aspirate (TA), and lung tissue) from patients with signs and symptoms of respiratory infection. Amplification and detection are accomplished using PCR primers and Pleiades hybridization probes manufactured by Epoch BioSciences, a Division of Wescor, Inc. The testing procedure consists of nucleic acid extraction on the Qiagen BioRobot 9604 instrument followed by real-time reverse-transcription PCR on the Applied Biosystems 7900HT Real-Time PCR System.

The ELITech Molecular Diagnostics 2009-H1N1 Influenza A virus Real-Time RT-PCR test includes the following primer and probe sets:

- **2009H1:** detects the presence of the hemagglutinin (HA) gene specifically found in the 2009 H1N1 influenza A virus.

- **M1:** detects a conserved region of the Matrix Protein 1 (M1) gene that is present in seasonal and 2009-H1N1 influenza A viruses.

- **Bacteriophage MS2 Internal Control:** detects RNA sequence in whole bacteriophage MS2 that is noncompetitive with the 2009-H1N1 and M1 targets.

The ELITech Molecular Diagnostics 2009-H1N1 Influenza A virus Real-Time RT-PCR test also includes the following control materials:

- **Bacteriophage MS2 Internal Control (IC)** is added to every patient sample and is carried through all steps of the procedure from nucleic acid isolation and purification through amplification to monitor for inhibitors present in the specimen or reaction tube. The IC also serves as a general process control ensuring that each step of the procedure was performed correctly, assay and instrument parameters were set correctly, and that general reagents were working.

- **Negative Control** consists of IC diluted with water and is taken through both nucleic acid extraction and PCR processes to demonstrate that no carryover contamination has occurred during the test process (rule out false positives caused by contamination). The Negative Control is incorporated into each batch of patient specimen processing.

- **Positive Controls** consist of separate RNA templates containing targets recognized by the 2009H1 and M1 detection systems. Each Positive Control is taken through both nucleic acid extraction and PCR processes to demonstrate that nucleic acid extraction and PCR are effective (rule out false negatives caused by test failure). The Positive Controls are incorporated into each batch of patient specimen processing.

The ELITech Molecular Diagnostics 2009-H1N1 Influenza A virus Real-Time RT-PCR test requires the following hardware with corresponding software:

- Applied Biosystems 7900HT Real-Time PCR System with ABI Software: SDS 7900HT, v2.2.2 or v2.3.

- Qiagen BioRobot 9604 with QIAsoft 3.0 PLUS software.

The ELITech Molecular Diagnostics 2009-H1N1 Influenza A virus Real-Time RT-PCR test requires the use of the following additional reagents/materials:

- Qiagen QuantiTect Probe RT-PCR Master mix (Qiagen Cat. No 204443)

- Consumables for Qiagen BioRobot 9604

- QIAamp Virus BioRobot 9604 Kit (Qiagen Cat. No 965662)

- RNase Inhibitor (Applied Biosystems Cat. No N8080119)

- Heat-labile Uracil N-Glycosylase (Roche Cat No 11775367001)

- MasterAmp 10X PCR Enhancer (Epicentre Cat No ME81210)

The above described ELITech Molecular Diagnostics 2009-H1N1 Influenza A virus Real-Time RT-PCR test, when labeled consistently with the labeling authorized by FDA, entitled ELITech Molecular Diagnostics 2009-H1N1 Influenza A virus Real-Time RT-PCR test Package Insert (available at *http://www.fda.gov/MedicalDevices/Safety/EmergencySituations/ucm161496.htm*), as may be revised with written permission of FDA, is authorized to be distributed to and used by ARUP Laboratories,[4] under this EUA, despite the fact that it does not meet certain requirements otherwise required by federal law.

The above described ELITech Molecular Diagnostics 2009-H1N1 Influenza A virus Real-Time RT-PCR test is authorized to be accompanied by the following information pertaining to the emergency use, which is authorized to be made available to healthcare providers and patients:

- Fact Sheet for Healthcare Providers: Interpretation of the ELITech Molecular Diagnostics 2009-H1N1 Influenza A virus Real-Time RT-PCR Test Results

- Fact Sheet for Patients: Understanding the ELITech Molecular Diagnostics 2009-H1N1 Influenza A virus Real-Time RT-PCR Test Results

As described in section IV below, Epoch Biosciences, is also authorized to make available additional information relating to the emergency use of the authorized ELITech Molecular Diagnostics 2009-H1N1 Influenza A virus Real-Time RT-PCR test that is consistent with, and does not exceed, the terms of this letter of authorization.

I have concluded, pursuant to section 564(d)(2) of the Act, that it is reasonable to believe that the known and potential benefits of the authorized ELITech Molecular Diagnostics 2009-H1N1 Influenza A virus Real-Time RT-PCR test in the specified population, when used for diagnosis of 2009 H1N1 influenza virus infection, outweigh the known and potential risks of such a product.

I have concluded, pursuant to section 564(d)(3) of the Act, based on the totality of scientific evidence available to FDA, that it is reasonable to believe that the authorized ELITech Molecular Diagnostics 2009-H1N1 Influenza A virus Real-Time RT-PCR test may be effective in the diagnosis of 2009 H1N1 influenza virus infection pursuant to section 564(c)(2)(A) of the Act. The FDA has reviewed the scientific information available including the information supporting the conclusions described in Section I above, and concludes that the authorized ELITech Molecular Diagnostics 2009-H1N1 Influenza A virus Real-Time RT-PCR test, when used to diagnose 2009 H1N1 influenza virus infection in the specified population, meets the criteria set forth in section 564(c) of the Act concerning safety and potential effectiveness.

The emergency use of the authorized ELITech Molecular Diagnostics 2009-H1N1 Influenza A virus Real-Time RT-PCR test under this EUA must be consistent with, and may not exceed, the terms of this letter, including the scope and the conditions of authorization set forth below. Subject to the terms of this EUA and under the circumstances set forth in the Secretary of HHS's determination under section 564(b)(1)(C) described above and the Secretary of HHS's corresponding declaration under section 564(b)(1), the ELITech Molecular Diagnostics 2009-H1N1 Influenza A virus Real-Time RT-PCR test described above is authorized to diagnose 2009 H1N1 influenza virus infection in individuals with signs and symptoms of respiratory infection.

This EUA will cease to be effective when the declaration of emergency is terminated under section 564(b)(2) of the Act or when the EUA is revoked under section 564(g) of the Act.

III. Waiver of Certain Requirements

I am waiving the following requirements for the ELITech Molecular Diagnostics 2009-H1N1 Influenza A virus Real-Time RT-PCR test during the duration of this emergency use authorization:

- Current good manufacturing practice requirements, including the quality system requirements under 21 CFR Part 820 with respect to the design, manufacture, packaging, labeling, storage, and distribution of the ELITech Molecular Diagnostics 2009-H1N1 Influenza A virus Real-Time RT-PCR test.

- Labeling requirements for cleared, approved, or investigational devices, including labeling requirements under 21 CFR 809.10 and 809.30, except for the intended use statement (21 CFR 809.10(a)(2), (b)(2)), adequate directions for use (21 U.S.C. 352(f)), (21 CFR 809.10(b)(5) and (8)), any appropriate limitations on the use of the device including information required under 21 CFR 809.10(a)(4), and any available information regarding performance of the device, including requirements under 21 CFR 809.10(b)(12).

IV. Conditions of Authorization

Pursuant to section 564 of the Act, I am establishing the following conditions on this authorization:

Epoch Biosciences

A. Epoch Biosciences will distribute the ELITech Molecular Diagnostics 2009-H1N1 Influenza A virus Real-Time RT-PCR test with the authorized labeling, as may be revised with written permission of FDA, only to ARUP Laboratories.

B. Epoch Biosciences will provide to ARUP Laboratories the authorized ELITech Molecular Diagnostics 2009-H1N1 Influenza A virus Real-Time RT-PCR test Fact Sheet for Healthcare Providers and the authorized ELITech Molecular Diagnostics 2009-H1N1 Influenza A virus Real-Time RT-PCR test Fact Sheet for Patients.

C. Epoch Biosciences will make available on its website the authorized ELITech Molecular Diagnostics 2009-H1N1 Influenza A virus Real-Time RT-PCR test Fact Sheet for Healthcare Providers and the authorized ELITech Molecular Diagnostics 2009-H1N1 Influenza A virus Real-Time RT-PCR test Fact Sheet for Patients.

D. Epoch Biosciences will inform state and/or local public health authority(ies) of this EUA, including the terms and conditions herein.

E. Epoch Biosciences will ensure ARUP Laboratories has a process in place for reporting test results to health care providers and federal, state, and/or local public health authorities, as appropriate.

F. Epoch Biosciences will track adverse events and report to FDA as required under 21 CFR part 803.

G. Through a process of inventory control, Epoch Biosciences will maintain records of device usage.

H. Epoch Biosciences will collect information on the performance of the assay, and report to FDA any suspected occurrence of false positive or false negative results of which Epoch Biosciences becomes aware.

I. Epoch Biosciences is authorized to make available additional information relating to the emergency use of the authorized ELITech Molecular Diagnostics 2009-H1N1 Influenza A virus Real-Time RT-PCR test that is consistent with, and does not exceed, the terms of this letter of authorization.

J. Only Epoch Biosciences may request changes to the authorized ELITech Molecular Diagnostics 2009-H1N1 Influenza A virus Real-Time RT-PCR test Fact Sheet for Healthcare Providers or the authorized ELITech Molecular Diagnostics 2009-H1N1 Influenza A virus Real-Time RT-PCR test Fact Sheet for Patients. Such requests will be made by contacting FDA concerning FDA review and approval.

ARUP Laboratories

K. ARUP Laboratories will include with reports of the results of the ELITech Molecular Diagnostics 2009-H1N1 Influenza A virus Real-Time RT-PCR test the authorized ELITech Molecular Diagnostics 2009-H1N1 Influenza A virus Real-Time RT-PCR test Fact Sheets for Healthcare Providers and the authorized ELITech Molecular Diagnostics 2009-H1N1 Influenza A virus Real-Time RT-PCR test Fact Sheets for Patients.

L. ARUP Laboratories will clearly and conspicuously state on reports of the results of the ELITech Molecular Diagnostics 2009-H1N1 Influenza A virus Real-Time RT-PCR test that this test is only authorized for the diagnosis of 2009 H1N1 influenza virus and not for seasonal influenza A, B, respiratory syncytial virus (RSV) or any other pathogen.

M. ARUP Laboratories will use the Qiagen BioRobot 9604 for nucleic acid extraction and perform the assay on the Applied Biosystems 7900HT Real-time PCR instrument.

N. ARUP Laboratories will have a process in place for reporting test results to health care providers and federal, state and/or local public health authorities, as appropriate.

O. ARUP Laboratories will collect information on the performance of the assay, and report to Epoch Biosciences any suspected occurrence of false positive or false negative results of which ARUP Laboratories becomes aware.

Epoch Biosciences and ARUP Laboratories

P. Epoch Biosciences and ARUP Laboratories will make available on their Web sites the authorized ELITech Molecular Diagnostics 2009-H1N1 Influenza A virus Real-Time RT-PCR test Fact Sheets for Healthcare Providers and the authorized ELITech Molecular Diagnostics 2009-H1N1 Influenza A virus Real-Time RT-PCR test Fact Sheets for Patients.

Q. Epoch Biosciences and ARUP Laboratories will ensure that any records associated with this EUA are maintained until notified by FDA. Such records will be made available to FDA for inspection upon request.

R. All advertising and promotional descriptive printed matter relating to the use of the ELITech Molecular Diagnostics 2009-H1N1 Influenza A virus Real-Time RT-PCR test shall be consistent with the Fact Sheets and authorized labeling, as well as the terms set forth in this EUA and other requirements set forth in the Act and FDA regulations.

S. All advertising and promotional descriptive printed matter relating to the use of the ELITech Molecular Diagnostics 2009-H1N1 Influenza A virus Real-Time RT-PCR test shall clearly and conspicuously state that:

- This test has not been FDA cleared or approved;
- This test has been authorized by FDA under an Emergency Use Authorization;
- This test has been authorized only for the detection of 2009 H1N1 influenza virus and not for any other viruses or pathogens;
- This test is only authorized for the duration of the declaration of emergency under section 564(b)(1) of the Act, 21 U.S.C. § 360bbb-3(b)(1); and
- The declaration of emergency will expire on April 26, 2010, unless it is terminated or revoked sooner or renewed.

T. No advertising or promotional descriptive printed matter relating to the use of the ELITech Molecular Diagnostics 2009-H1N1 Influenza A virus Real-Time RT-PCR test may represent or suggest that this test is safe or effective for the diagnosis of 2009 H1N1 influenza virus.

The emergency use of the authorized ELITech Molecular Diagnostics 2009-H1N1 Influenza A virus Real-Time RT-PCR test as described in this letter of authorization must comply with the conditions above and all other terms of this authorization.

V. Duration of Authorization

This EUA will be effective until the declaration of emergency is terminated under section 564(b)(2) of the Act or the EUA is revoked under section 564(g) of the Act.

Margaret A. Hamburg, M.D.
Commissioner of Food and Drugs

[1] The amendments to the October 16, 2009 letter authorize use of a) additional upper respiratory tract samples, such as nasal swabs (NS), throat swabs (TS), nasal aspirates (NA), nasal washes (NW), and dual nasopharyngeal / throat swabs (NPS/TS), and lower respiratory tract specimens, such as broncheoalveolar lavage (BAL), bronchial aspirate (BA), bronchial wash (BW), endotracheal aspirate (EA), endotracheal wash (EW), tracheal aspirate (TA), and lung tissue and b) ABI Software SDS 7900HT v2.3 on the Applied Biosystems 7900HT real-Time PCR System. There are also minor wording changes made to be consistent with more recently issued Emergency Use Authorizations for in vitro diagnostic devices.
[2] Memorandum, Determination Pursuant to §564 of the Federal Food, Drug, and Cosmetic Act (April 26, 2009).
[3] No other criteria of issuance have been prescribed by regulation under section 564(c)(4) of the Act.
[4] This EUA does not authorize the ELITech Molecular Diagnostics 2009-H1N1 Influenza A virus Real-Time RT-PCR test to be sold or distributed to or used by other laboratories.

(3) The Authorization for the Longhorn Influenza A/H1N1–09 Prime RRT–PCR Assay issued on February 16, 2010, as amended and reissued in its entirety on March 23, 2010, follows and provides an explanation of the reasons for its issuance, as required by section 564(h)(1) of the act:

Gerald W. Fischer, M.D.
Executive Director and Chief Medical Officer
Longhorn Vaccines and Diagnostics
3 Bethesda Metro Center, Suite 375
Bethesda, MD 20814

Dear Dr. Fischer:

On February 16, 2010 FDA issued a letter authorizing the emergency use of the Longhorn Influenza A/H1N1-09 Prime RRT-PCR Assay™ for the diagnosis of 2009 H1N1 influenza virus infection in patients with signs and symptoms of respiratory infection in conjunction with clinical and epidemiological risk factors, pursuant to section 564 of the Federal Food, Drug, and Cosmetic Act (the Act) (21 U.S.C. § 360bbb-3) by laboratories certified under the Clinical Laboratory Improvement Amendments of 1988, 42 U.S.C. § 263a, to perform high complexity tests (CLIA High Complexity Laboratories). On February 26, 2010, Longhorn Vaccines and Diagnostics submitted a request for an amendment to the Emergency Use Authorization. In response to that request, the letter authorizing emergency use of the Longhorn Influenza A/H1N1-09 Prime RRT-PCR Assay is being reissued in its entirety with the amendments incorporated.[1]

On April 26, 2009, pursuant to section 564(b)(1)(C) of the Act (21 U.S.C. § 360bbb-3(b)(1)(C)), the Secretary of the Department of Health and Human Services (HHS) determined that there is a public health emergency under 42 U.S.C. § 247d that affects, or has a significant potential to affect, national security, and that involves a specified biological, chemical, radiological, or nuclear agent or agents, or a specified disease or condition that may be attributable to such an agent or agents - in this case, 2009 H1N1 influenza virus.[2] Pursuant to section 564(b) of the Act (21 U.S.C. § 360bbb-3(b)), and on the basis of such determination, the Secretary of HHS then declared an emergency justifying the authorization of the emergency use of certain in vitro diagnostics for the detection of 2009 H1N1 influenza virus, subject to the terms of any authorization issued under 21 U.S.C. § 360bbb-3(a).

Having concluded that the criteria for issuance of this authorization under section 564(c) of the Act (21 U.S.C. § 360bbb-3(c)) are met, I am authorizing the emergency use of the Longhorn Influenza A/H1N1-09 Prime RRT-PCR Assay (as described in the scope section of this letter (Section II)) for the diagnosis of 2009 H1N1 influenza virus infection in individuals with signs and symptoms of respiratory infection in conjunction with clinical and epidemiological risk factors, subject to the terms of this authorization.

I. Criteria for Issuance of Authorization

I have concluded that the emergency use of the Longhorn Influenza A/H1N1-09 Prime RRT-PCR Assay for the diagnosis of 2009 H1N1 influenza virus infection in individuals with signs and symptoms of respiratory infection meets in conjunction with clinical and epidemiological risk factors the criteria for issuance of an authorization under section 564(c) of the Act, because I have concluded that:

1. The 2009 H1N1 influenza virus can cause influenza, a serious or life threatening disease or condition to humans infected by this virus;

2. Based on the totality of scientific evidence available to FDA, it is reasonable to believe that the Longhorn Influenza A/H1N1-09 Prime RRT-PCR Assay may be effective for the diagnosis of 2009 H1N1 influenza virus infection, and that the known and potential benefits of the Longhorn Influenza A/H1N1-09 Prime RRT-PCR Assay, when used in the diagnosis of 2009 H1N1 influenza virus infection, outweigh the known and potential risks of such product; and

3. There is no adequate, approved, and available alternative to the emergency use of the Longhorn Influenza A/H1N1-09 Prime RRT-PCR Assay for the diagnosis of 2009 H1N1 influenza virus infection[3].

II. Scope of Authorization

I have concluded, pursuant to section 564(d)(1) of the Act, that the scope of this authorization is limited to the use of the authorized Longhorn Influenza A/H1N1-09 Prime RRT-PCR Assay for the diagnosis of 2009 H1N1 influenza virus infection in individuals with signs and symptoms of respiratory infection.

The Authorized Longhorn Influenza A/H1N1-09 Prime RRT-PCR Assay:

The Longhorn Influenza A/H1N1-09 Prime RRT-PCR Assay is a real-time reverse transcriptase PCR (RRT-PCR) for the *in vitro* qualitative detection of 2009 H1N1 influenza viral RNA in upper respiratory tract samples, such as nasal swabs (NS), throat swabs (TS), nasal aspirates (NA), nasal washes (NW), and dual nasopharyngeal / throat swabs (NPS/TS) from patients with signs and symptoms of respiratory infection in conjunction with clinical and epidemiological risk factors. The testing procedure consists of nucleic acid extraction on the RNAqueous system (Ambion, Inc.) or QIAamp Viral RNA Minikit (Qiagen) followed by RRT-PCR on the Applied Biosystems 7500 Real-Time PCR System.

The Longhorn Influenza A/H1N1-09 Prime RRT-PCR Assay includes the following primer and probe sets:

- **FluA:** detects a conserved region of the matrix (M) gene that is present in pan A, seasonal and 2009 H1N1 influenza A viruses.
- **H1-09:** detects a region of the hemagglutinin (HA) gene found in the 2009 H1N1 influenza virus.
- **IPC (Internal Positive Control):** detects a nonsense RNA sequence contained in the PrimeStore reagent.

The Longhorn Influenza A/H1N1-09 Prime RRT-PCR Assay also includes the following control materials:

- **Internal Positive Control (IPC)** is contained in the PrimeStore reagent that is added to every patient sample before beginning nucleic acid isolation and purification, and is present through amplification to ensure that effective nucleic acid preservation and recovery is achieved and to monitor for inhibition of RRT-PCR.
- **Negative Control** consists of PrimeStore reagent and is taken through both nucleic acid extraction and RRT-PCR processes to demonstrate that all extraction and amplification reagents are free of target RNA and amplicons and to ensure that detection of target genes is not due to false positive results.
- **Positive Controls** consist of separate RNA templates containing targets recognized by the FluA and H1-09 detection systems and are included in each RRT-PCR run to demonstrate that these detection systems are operating at the required level of sensitivity.

The Longhorn Influenza A/H1N1-09 Prime RRT-PCR Assay requires the following hardware with corresponding software:

- Applied Biosystems 7500 Real-Time PCR System with SDS v1.4 software

The Longhorn Influenza A/H1N1-09 Prime RRT-PCR Assay requires the use of the following additional reagents/materials:

- Nucleic acid isolation kit, RNAqueous® Micro Kit or QIAamp Viral RNA Minikit

The above described Longhorn Influenza A/H1N1-09 Prime RRT-PCR Assay, when labeled consistently with the labeling authorized by FDA, entitled Longhorn Influenza A/H1N1-09 Prime RRT-PCR Assay Package Insert (available at *http://www.fda.gov/MedicalDevices/Safety/EmergencySituations/ucm161496.htm*), as may be revised with written permission of FDA, is authorized to be distributed to and used by CLIA High Complexity Laboratories, under this EUA, despite the fact that it does not meet certain requirements otherwise required by federal law.

The above described Longhorn Influenza A/H1N1-09 Prime RRT-PCR Assay is authorized to be accompanied by the following information pertaining to the emergency use, which is authorized to be made available to healthcare providers and patients:

- **Fact Sheet for Healthcare Providers: Interpreting Longhorn Influenza A/H1N1-09 Prime RRT-PCR Assay Results**
- **Fact Sheet for Patients: Understanding Longhorn Influenza A/H1N1-09 Prime RRT-PCR Assay Results**

As described in section IV below, Longhorn Vaccines and Diagnostics is also authorized to make available additional information relating to the emergency use of the authorized Longhorn Influenza A/H1N1-09 Prime RRT-PCR Assay that is consistent with, and does not exceed, the terms of this letter of authorization.

I have concluded, pursuant to section 564(d)(2) of the Act, that it is reasonable to believe that the known and potential benefits of the authorized Longhorn Influenza A/H1N1-09 Prime RRT-PCR Assay in the specified population, when used for diagnosis of 2009 H1N1 influenza virus infection, outweigh the known and potential risks of such a product.

I have concluded, pursuant to section 564(d)(3) of the Act, based on the totality of scientific evidence available to FDA, that it is reasonable to believe that the authorized Longhorn Influenza A/H1N1-09 Prime RRT-PCR Assay may be effective in the diagnosis of 2009 H1N1 influenza virus infection pursuant to section 564(c)(2)(A) of the Act. The FDA has reviewed the scientific information available including the information supporting the conclusions described in Section I above, and concludes that the authorized Longhorn Influenza A/H1N1-09 Prime RRT-PCR Assay, when used to diagnose 2009 H1N1 influenza virus infection in the specified population, meets the criteria set forth in section 564(c) of the Act concerning safety and potential effectiveness.

The emergency use of the authorized Longhorn Influenza A/H1N1-09 Prime RRT-PCR Assay under this EUA must be consistent with, and may not exceed, the terms of this letter, including the scope and the conditions of authorization set forth below. Subject to the terms of this EUA and under the circumstances set forth in the Secretary of HHS's determination under section 564(b)(1)(C) described above and the Secretary of HHS's corresponding declaration under section 564(b)(1), the Longhorn Influenza A/H1N1-09 Prime RRT-PCR Assay described above is authorized to diagnose 2009 H1N1 influenza virus infection in individuals with signs and symptoms of respiratory infection.

This EUA will cease to be effective when the declaration of emergency is terminated under section 564(b)(2) of the Act or when the EUA is revoked under section 564(g) of the Act.

III. Waiver of Certain Requirements

I am waiving the following requirements for the Longhorn Influenza A/H1N1-09 Prime RRT-PCR Assay during the duration of this emergency use authorization:

- Current good manufacturing practice requirements, including the quality system requirements under 21 CFR Part 820 with respect to the design, manufacture, packaging, labeling, storage, and distribution of the Longhorn Influenza A/H1N1-09 Prime RRT-PCR Assay.

- Labeling requirements for cleared, approved, or investigational devices, including labeling requirements under 21 CFR 809.10 and 809.30, except for the intended use statement (21 CFR 809.10(a)(2), (b)(2)), adequate directions for use (21 U.S.C. 352(f)), (21 CFR 809.10(b)(5) and (8)), any appropriate limitations on the use of the device including information required under 21 CFR 809.10(a)(4), and any available information regarding performance of the device, including requirements under 21 CFR 809.10(b)(12).

IV. Conditions of Authorization

Pursuant to section 564 of the Act, I am establishing the following conditions on this authorization:

Longhorn Vaccines and Diagnostics

A. Longhorn Vaccines and Diagnostics will distribute the authorized Longhorn Influenza A/H1N1-09 Prime RRT-PCR Assay with the authorized labeling, as may be revised with written permission of FDA, only to CLIA High Complexity Laboratories.

B. Longhorn Vaccines and Diagnostics will provide to the CLIA High Complexity Laboratories the authorized Longhorn Influenza A/H1N1-09 Prime RRT-PCR Assay Fact Sheet for Healthcare Providers and the authorized Longhorn Influenza A/H1N1-09 Prime RRT-PCR Assay Fact Sheet for Patients.

C. Longhorn Vaccines and Diagnostics will make available on its website the authorized Longhorn Influenza A/H1N1-09 Prime RRT-PCR Assay Fact Sheet for Healthcare Providers and the authorized Longhorn Influenza A/H1N1-09 Prime RRT-PCR Assay Fact Sheet for Patients.

D. Longhorn Vaccines and Diagnostics will inform state and/or local public health authority(ies) of this EUA, including the terms and conditions herein.

E. All advertising and promotional descriptive printed matter relating to the use of the authorized Longhorn Influenza A/H1N1-09 Prime RRT-PCR Assay shall be consistent with the Fact Sheets and authorized labeling, as well as the terms set forth in this EUA and other requirements set forth in the Act and FDA regulations.

F. All advertising and promotional descriptive printed matter relating to the use of the authorized Longhorn Influenza A/H1N1-09 Prime RRT-PCR Assay shall clearly and conspicuously state that:

- This test has not been FDA cleared or approved;
- FDA has not determined that this test may be performed in settings with certificates of waiver under the Clinical Laboratory Improvement Amendments of 1988 (CLIA), 42 U.S.C. § 263a;
- This test has been authorized by FDA under an Emergency Use Authorization;
- This test has been authorized only for the diagnosis of 2009 H1N1 influenza virus and not for the diagnosis of any other viruses or pathogens;
- This test is only authorized for the duration of the declaration of emergency under section 564(b)(1) of the Federal Food, Drug, and Cosmetic Act, 21 U.S.C. § 360bbb-3(b)(1), unless the authorization is revoked sooner; and
- The declaration of emergency will expire on April 26, 2010, unless it is terminated sooner or renewed.

G. No advertising or promotional descriptive printed matter relating to the use of the authorized Longhorn Influenza A/H1N1-09 Prime RRT-PCR Assay may represent or suggest that this test is safe or effective for the diagnosis of 2009 H1N1 influenza virus.

H. Longhorn Vaccines and Diagnostics will ensure that CLIA High Complexity Laboratories using the authorized Longhorn Influenza A/H1N1-09 Prime RRT-PCR Assay have a process in place for reporting test results to healthcare providers and federal, state and/or local public health authorities, as appropriate.

I. Longhorn Vaccines and Diagnostics will track adverse events and report to FDA as required under 21 CFR part 803.

J. Through a process of inventory control, Longhorn Vaccines and Diagnostics will maintain records of device usage.

K. Longhorn Vaccines and Diagnostics will collect information on the performance of the assay and report to FDA any suspected occurrence of false positive or false negative results of which Longhorn Vaccines and Diagnostics becomes aware.

L. Longhorn Vaccines and Diagnostics is authorized to make available additional information relating to the emergency use of the authorized Longhorn Influenza A/H1N1-09 Prime RRT-PCR Assay that is consistent with, and does not exceed, the terms of this letter of authorization.

M. Only Longhorn Vaccines and Diagnostics may request changes to the authorized Longhorn Influenza A/H1N1-09 Prime RRT-PCR Assay Fact Sheet for Healthcare Providers or the authorized Longhorn Influenza A/H1N1-09 Prime RRT-PCR Assay Fact Sheet for Patients. Such requests will be made by contacting FDA concerning FDA review and approval.

CLIA High Complexity Laboratories

N. CLIA High Complexity Laboratories will include with reports of the results of the Longhorn Influenza A/H1N1-09 Prime RRT-PCR Assay the authorized Fact Sheet for Healthcare Providers and the authorized Fact Sheet for Patients.

O. CLIA High Complexity Laboratories will perform the assay on the Applied Biosystems 7500 Real-Time PCR System with SDS v1.4 software

P. CLIA High Complexity Laboratories will have a process in place for reporting test results to healthcare providers and federal, state and/or local public health authorities, as appropriate.

Q. CLIA High Complexity Laboratories will collect information on the performance of the assay, and report to Longhorn Vaccines and Diagnostics any suspected occurrence of false positive or false negative results of which CLIA High Complexity Laboratories become aware.

R. CLIA High Complexity Laboratories will clearly and conspicuously state on reports of the results of the Longhorn Influenza A/H1N1-09 Prime RRT-PCR Assay that this test is only authorized for the diagnosis of 2009 H1N1 influenza virus and not for seasonal influenza A, B, or any other pathogen.

Longhorn Vaccines and Diagnostics and CLIA High Complexity Laboratories

S. Longhorn Vaccines and Diagnostics and CLIA High Complexity Laboratories will ensure that any records associated with this EUA are maintained until notified by FDA. Such records will be made available to FDA for inspection upon request.

The emergency use of the authorized Longhorn Influenza A/H1N1-09 Prime RRT-PCR Assay as described in this letter of authorization must comply with the conditions above and all other terms of this authorization.

V. Duration of Authorization

This EUA will be effective until the declaration of emergency is terminated under section 564(b)(2) of the Act or the EUA is revoked under section 564(g) of the Act

Margaret A. Hamburg, M.D.
Commissioner of Food and Drugs

[1] The amendments to the February 16, 2010 letter authorize use of additional upper respiratory tract samples, such as nasal swabs (NS), throat swabs (TS), nasal aspirates (NA), nasal washes (NW), and dual nasopharyngeal / throat swabs (NPS/TS), and use of QIAamp viral RNA minikit for extraction.
[2] Memorandum, Determination Pursuant to §564 of the Federal Food, Drug, and Cosmetic Act (April 26, 2009).
[3] No other criteria of issuance have been prescribed by regulation under section 564(c)(4) of the Act.

(4) The Authorization for the Diagnostic Hybrids, Inc. D³ Ultra 2009 H1N1 Influenza A Virus ID Kit issued on February 16, 2010, follows and provides an explanation of the reasons for its issuance, as required by section 564(h)(1) of the act:

Ronald H. Lollar
Senior Director Product Realization
Management and Marketing
Diagnostic Hybrids, Inc.
1055 East State Street
Suite 100
Athens, OH 45701

Dear Mr. Lollar:

This letter is in response to your request that the Food and Drug Administration (FDA) issue an Emergency Use Authorization (EUA) for emergency use of the Diagnostic Hybrids, Inc. D³ Ultra 2009 H1N1 Influenza A Virus ID Kit for the detection of 2009 H1N1 influenza A viral antigens present in infected cells directly from nasal and nasopharyngeal swabs and aspirates/washes specimens or cell culture from individuals with signs and symptoms of respiratory infection who have previously tested positive for the presence of influenza A virus-infected cells by a currently available FDA-cleared direct immunofluorescence influenza A antibody device pursuant to section 564 of the Federal Food, Drug, and Cosmetic Act (the Act) (21 U.S.C. § 360bbb-3), by CLIA high complexity laboratories, which are laboratories certified under the Clinical Laboratory Improvement Amendments of 1988 (CLIA), 42 U.S.C. § 263a.

On April 26, 2009, pursuant to section 564(b)(1)(C) of the Act (21 U.S.C. § 360bbb-3(b)(1)(C)), the Secretary of the Department of Health and Human Services (HHS) determined that there is a public health emergency under 42 U.S.C. § 247d that affects, or has a significant potential to affect, national security, and that involves a specified biological, chemical, radiological, or nuclear agent or agents, or a specified disease or condition that may be attributable to such an agent or agents - in this case, 2009 H1N1 influenza virus.[1] Pursuant to section 564(b) of the Act (21 U.S.C. § 360bbb-3(b)), and on the basis of such determination, the Secretary of HHS then declared an emergency justifying the authorization of the emergency use of certain in vitro diagnostics for the detection of 2009 H1N1 influenza virus, subject to the terms of any authorization issued under 21 U.S.C. § 360bbb-3(a).

Having concluded that the criteria for issuance of this authorization under section 564(c) of the Act (21 U.S.C. § 360bbb-3(c)) are met, I am authorizing the emergency use of the Diagnostic Hybrids D³ Ultra 2009 H1N1 Influenza A Virus ID Kit (as described in the scope section of this letter (Section II)) for the detection of 2009 H1N1 influenza A viral antigens present in infected cells directly from nasal and nasopharyngeal swabs and aspirates/washes specimens or cell culture from individuals with signs and symptoms of respiratory infection who have previously tested positive for the presence of influenza A virus-infected cells by a currently available FDA-cleared direct immunofluorescence influenza A antibody device subject to the terms of this authorization.

I. Criteria for Issuance of Authorization

I have concluded that the emergency use of the Diagnostic Hybrids D³ Ultra 2009 H1N1 Influenza A Virus ID Kit for the detection of 2009 H1N1 influenza A viral antigens present in infected cells directly from nasal and nasopharyngeal swabs and aspirates/washes specimens or cell culture from individuals with signs and symptoms of respiratory infection who have previously tested positive for the presence of influenza A virus-infected cells by a currently available FDA-cleared direct immunofluorescence influenza A antibody device meets the criteria for issuance of an authorization under section 564(c) of the Act, because I have concluded that:

1. The 2009 H1N1 influenza virus can cause influenza, a serious or life threatening disease or condition to humans infected by this virus;

2. Based on the totality of scientific evidence available to FDA, it is reasonable to believe that the Diagnostic Hybrids D³ Ultra 2009 H1N1 Influenza A Virus ID Kit may be effective for the diagnosis of 2009 H1N1 influenza virus infection, and that the known and potential benefits of the Diagnostic Hybrids D³ Ultra 2009 H1N1 Influenza A Virus ID Kit, when used in the diagnosis of 2009 H1N1 influenza virus infection, outweigh the known and potential risks of such product; and

3. There is no adequate, approved, and available alternative to the emergency use of the Diagnostic Hybrids D³ Ultra 2009 H1N1 Influenza A Virus ID Kit for the diagnosis of 2009 H1N1 influenza virus infection.[2]

II. Scope of Authorization

I have concluded, pursuant to section 564(d)(1) of the Act, that the scope of this authorization is limited to the use of the authorized Diagnostic Hybrids D³ Ultra 2009 H1N1 Influenza A Virus ID Kit for detection of 2009 H1N1 influenza A viral antigens present in infected cells directly from nasal and nasopharyngeal swabs and aspirates/washes specimens or cell culture from individuals with signs and symptoms of respiratory infection who have previously tested positive for the presence of influenza A virus-infected cells by a currently available FDA-cleared direct immunofluorescence influenza A antibody device

The Authorized Diagnostic Hybrids D³ Ultra 2009 H1N1 Influenza A Virus ID Kit:

The Diagnostic Hybrids D³ Ultra 2009 H1N1 Influenza A Virus ID Kit uses a blend of 2009 H1 influenza antigen-specific murine monoclonal antibodies that when combined with a fluorescein-labeled conjugate is intended for the detection of 2009 H1N1 Influenza A Virus antigens present in infected cells directly from nasal and nasopharyngeal swabs and aspirates/washes specimens or cell culture from individuals with signs and symptoms of respiratory infection who have previously tested positive for the presence of influenza A virus-infected cells by a currently available FDA-cleared direct immunofluorescence influenza A antibody device.

Components of the Test:

The Diagnostic Hybrids D³ Ultra 2009 H1N1 Influenza A Virus ID Kit includes the following components:

- D³ Ultra 2009 Flu-A ID Reagent, 5.0-mL. One dropper bottle containing a mixture of murine monoclonal antibodies directed against 2009 H1 influenza A virus antigen. The buffered, stabilized, aqueous solution contains 0.1% sodium azide as preservative.
- D³ Flu-A ID Conjugate, 5.0-mL. An aqueous, stabilized, buffered solution containing fluorescein-labeled, affinity purified goat-anti-mouse IgG antibody and Evans Blue with sodium azide as preservative.
- 40X PBS Concentrate, 25-mL. One bottle of 40X PBS concentrate containing 4% sodium azide (0.1% sodium azide after dilution to 1X using de-mineralized water).
- Mounting Fluid, 7-mL. One dropper bottle containing an aqueous, buffer-stabilized solution of glycerol with 0.1% sodium azide.

The Diagnostic Hybrids D³ Ultra 2009 H1N1 Influenza A Virus ID Kit also includes the following control materials:

- D³ Ultra 2009 H1N1 Influenza A Virus ID Antigen Control Slides, 5-slides. Five (5) individually packaged control slides containing 2 wells with cell culture-derived positive and negative control cells.
- The positive well contains cells infected with 2009 H1N1 influenza A virus.
- The negative wells contain non-infected cells. Each slide is intended to be stained only one time.

The above described Diagnostic Hybrids D³ Ultra 2009 H1N1 Influenza A Virus ID Kit, when labeled consistently with the labeling authorized by FDA, entitled D³ Ultra 2009 H1N1 Influenza A Virus ID Kit Package Insert, (available at *http://www.fda.gov/MedicalDevices/Safety/EmergencySituations/ucm161496.htm*), as may be revised with written permission of FDA, is authorized to be distributed to and used by CLIA High Complexity Laboratories under this EUA, despite the fact that it does not meet certain requirements otherwise required by federal law.

The above described Diagnostic Hybrids D³ Ultra 2009 H1N1 Influenza A Virus ID Kit is authorized to be accompanied by the following information pertaining to the emergency use, which is authorized to be made available to healthcare providers and patients:

- Fact Sheet For Healthcare Providers: Interpreting the D³ Ultra 2009 H1N1 Influenza A Virus ID Kit Test Results

- Fact Sheet For Patients: Understanding the D³ Ultra 2009 H1N1 Influenza A Virus ID Kit Test Results

As described in section IV below, Diagnostic Hybrids, Inc. is also authorized to make available additional information relating to the emergency use of the authorized Diagnostic Hybrids D³ Ultra 2009 H1N1 Influenza A Virus ID Kit that is consistent with, and does not exceed, the terms of this letter of authorization.

I have concluded, pursuant to section 564(d)(2) of the Act, that it is reasonable to believe that the known and potential benefits of the authorized Diagnostic Hybrids D³ Ultra 2009 H1N1 Influenza A Virus ID Kit in the specified population, when used for diagnosis of 2009 H1N1 influenza virus infection, outweigh the known and potential risks of such a product.

I have concluded, pursuant to section 564(d)(3) of the Act, based on the totality of scientific evidence available to FDA, that it is reasonable to believe that the authorized Diagnostic Hybrids D³ Ultra 2009 H1N1 Influenza A Virus ID Kit may be effective in the diagnosis of 2009 H1N1 influenza virus infection pursuant to section 564(c)(2)(A) of the Act. The FDA has reviewed the scientific information available including the information supporting the conclusions described in Section I above, and concludes that the authorized Diagnostic Hybrids D³ Ultra 2009 H1N1 Influenza A Virus ID Kit, when used to diagnose 2009 H1N1 influenza virus infection in the specified population, meets the criteria set forth in section 564(c) of the Act concerning safety and potential effectiveness.

The emergency use of the authorized Diagnostic Hybrids D³ Ultra 2009 H1N1 Influenza A Virus ID Kit under this EUA must be consistent with, and may not exceed, the terms of this letter, including the scope and the conditions of authorization set forth below. Subject to the terms of this EUA and under the circumstances set forth in the Secretary of HHS's determination under section 564(b)(1)(C) described above and the Secretary of HHS's corresponding declaration under section 564(b)(1), the Diagnostic Hybrids D³ Ultra 2009 H1N1 Influenza A Virus ID Kit described above is authorized to diagnose 2009 H1N1 influenza virus infection in individuals with signs and symptoms of respiratory infection who previously tested positive for the presence of influenza A virus-infected cells by a currently available FDA-cleared direct immunofluorescence influenza A antibody device.

This EUA will cease to be effective when the declaration of emergency is terminated under section 564(b)(2) of the Act or when the EUA is revoked under section 564(g) of the Act.

III. Waiver of Certain Requirements

I am waiving the following requirements for the Diagnostic Hybrids D3 Ultra 2009 H1N1 Influenza A Virus ID Kit during the duration of this emergency use authorization:

- Current good manufacturing practice requirements, including the quality system requirements under 21 CFR Part 820 with respect to the design, manufacture, packaging, labeling, storage, and distribution of the Diagnostic Hybrids D3 Ultra 2009 H1N1 Influenza A Virus ID Kit.
- Labeling requirements for cleared, approved, or investigational devices, including labeling requirements under 21 CFR 809.10 and 809.30, except for the intended use statement (21 CFR 809.10(a)(2), (b)(2)), adequate directions for use (21 U.S.C. 352(f)), (21 CFR 809.10(b)(5) and (8)), any appropriate limitations on the use of the device including information required under 21 CFR 809.10(a)(4), and any available information regarding performance of the device, including requirements under 21 CFR 809.10(b)(12).

IV. Conditions of Authorization

Pursuant to section 564 of the Act, I am establishing the following conditions on this authorization:

Diagnostic Hybrids, Inc.

A. Diagnostic Hybrids, Inc. will distribute the authorized D3 Ultra 2009 H1N1 Influenza A Virus ID Kit with the authorized labeling, as may be revised with written permission of FDA, only to CLIA High Complexity Laboratories.

B. Diagnostic Hybrids, Inc. will provide to the CLIA High Complexity Laboratories the authorized D3 Ultra 2009 H1N1 Influenza A Virus ID Kit Fact Sheet for Healthcare Providers and the authorized D3 Ultra 2009 H1N1 Influenza A Virus ID Kit Fact Sheet for Patients.

C. Diagnostic Hybrids, Inc. will make available on its website the authorized D3 Ultra 2009 H1N1 Influenza A Virus ID Kit Fact Sheet for Healthcare Providers and the authorized D3 Ultra 2009 H1N1 Influenza A Virus ID Kit Fact Sheet for Patients.

D. Diagnostic Hybrids, Inc. will clearly and conspicuously state on reports of the results of the D3 Ultra 2009 H1N1 Influenza A Virus ID Kit that this test is only authorized for the diagnosis of 2009 H1N1 influenza virus and not for seasonal influenza A, B, or any other virus or pathogen

E. Diagnostic Hybrids, Inc. will inform state and/or local public health authority(ies) of this EUA, including the terms and conditions herein.

F. All advertising and promotional descriptive printed matter relating to the use of the authorized D3 Ultra 2009 H1N1 Influenza A Virus ID Kit shall be consistent with the Fact Sheets and authorized labeling, as well as the terms set forth in this EUA and other requirements set forth in the Act and FDA regulations.

G. All advertising and promotional descriptive printed matter relating to the use of the authorized D3 Ultra 2009 H1N1 Influenza A Virus ID Kit shall clearly and conspicuously state that:

- This test has not been FDA cleared or approved;
- This test has been authorized by FDA under an Emergency Use Authorization;
- This test has been authorized only for the detection of 2009 H1N1 influenza virus and not for any other viruses or pathogens;
- This test is only authorized for the duration of the declaration of emergency under section 564(b)(1) of the Federal Food, Drug, and Cosmetic Act, 21 U.S.C. § 360bbb-3(b)(1); and
- The declaration of emergency will expire on April 26, 2010, unless it is terminated sooner or renewed.

H. No advertising or promotional descriptive printed matter relating to the use of the authorized Diagnostic Hybrids D3 Ultra 2009 H1N1 Influenza A Virus ID Kit may represent or suggest that this test is safe or effective for the diagnosis of 2009 H1N1 influenza virus.

I. Diagnostic Hybrids, Inc. will ensure that CLIA High Complexity Laboratories using the authorized D3 Ultra 2009 H1N1 Influenza A Virus ID Kit have a process in place for reporting test results to healthcare providers and federal, state and/or local public health authorities, as appropriate.

J. Diagnostic Hybrids, Inc. will track adverse events and report to FDA as required under 21 CFR part 803.

K. Through a process of inventory control, Diagnostic Hybrids, Inc. will maintain records of device usage.

L. Diagnostic Hybrids, Inc. will collect information on the performance of the assay and report to FDA any suspected occurrence of false positive or false negative results of which Diagnostic Hybrids, Inc. becomes aware.

M. Diagnostic Hybrids, Inc. is authorized to make available additional information relating to the emergency use of the authorized D3 H1N1 Influenza A Virus ID Kit that is consistent with, and does not exceed, the terms of this letter of authorization.

N. Only Diagnostic Hybrids, Inc. may request changes to the authorized D3 2009 H1N1 Influenza A Virus ID Kit Fact Sheet for Healthcare Providers or the authorized D3 2009 H1N1 Influenza A Virus ID Kit for Patients. Such requests will be made by contacting FDA concerning FDA review and approval.

O. Diagnostic Hybrids, Inc. will ensure that any records associated with this EUA are maintained until notified by FDA. Such records will be made available to FDA for inspection upon request.

CLIA High Complexity Laboratories

P. CLIA High Complexity Laboratories will test a patient sample using the Diagnostic Hybrids D^3 Ultra 2009 H1N1 Influenza A Virus ID Kit only when the patient sample has already tested positive for the presence of influenza A virus-infected cells by a currently available FDA-cleared direct immunofluorescence antibody influenza A device.

Q. CLIA High Complexity Laboratories will include with reports of the results of the Diagnostic Hybrids D^3 2009 H1N1 Influenza A Virus ID Kit the authorized Fact Sheet for Healthcare Providers and the authorized Fact Sheet for Patients.

R. CLIA High Complexity Laboratories will have a process in place for reporting test results to healthcare providers and federal, state and/or local public health authorities, as appropriate.

S. CLIA High Complexity Laboratories will collect information on the performance of the assay, and report to Diagnostic Hybrids, Inc. any suspected occurrence of false positive or false negative results of which CLIA High Complexity Laboratories become aware.

T. CLIA High Complexity Laboratories will clearly and conspicuously state on reports of the results of the Diagnostic Hybrids D^3 2009 H1N1 Influenza A Virus ID Kit that this test is only authorized for the diagnosis of 2009 H1N1 influenza virus and not for seasonal influenza A, B, or any other pathogen.

U. Diagnostic Hybrids, Inc. and CLIA High Complexity Laboratories will ensure that any records associated with this EUA are maintained until notified by FDA. Such records will be made available to FDA for inspection upon request.

The emergency use of the authorized Diagnostic Hybrids D^3 Ultra 2009 H1N1 Influenza A Virus ID Kit as described in this letter of authorization must comply with the conditions above and all other terms of this authorization.

V. Duration of Authorization

This EUA will be effective until the declaration of emergency is terminated under section 564(b)(2) of the Act or the EUA is revoked under section 564(g) of the Act.

Dr. Margaret A. Hamburg,
Commissioner of Food and Drugs Administration

[1] Memorandum, Determination Pursuant to § 564 of the Federal Food, Drug, and Cosmetic Act (April 26, 2009).
[2] No other criteria of issuance have been prescribed by regulation under section 564(c)(4) of the Act.

(5) The Authorization for the *artus* Inf. A H1N1 2009 LC RT–PCR Kit issued on March 11, 2010, follows and provides an explanation of the reasons for its issuance, as required by section 564(h)(1) of the act:

Kim Davis
Manager - Regulatory and Clinical Sciences North America
QIAGEN
1201 Clopper Road
Gaithersburg, MD 20878

Dear Ms. Davis:

This letter is in response to your request that the Food and Drug Administration (FDA) issue an Emergency Use Authorization (EUA) for emergency use of the *artus*® Inf. A H1N1 2009 LC RT-PCR Kit for the diagnosis of 2009 H1N1 influenza virus infection in patients with signs and symptoms of respiratory infection, pursuant to section 564 of the Federal Food, Drug, and Cosmetic Act (the Act) (21 U.S.C. § 360bbb-3), by CLIA High Complexity Laboratories, which are laboratories certified under the Clinical Laboratory Improvement Amendments of 1988, 42 U.S.C. § 263a, to perform high complexity tests.

On April 26, 2009, pursuant to section 564(b)(1)(C) of the Act (21 U.S.C. § 360bbb-3(b)(1)(C)), the Secretary of the Department of Health and Human Services (HHS) determined that there is a public health emergency under 42 U.S.C. § 247d that affects, or has a significant potential to affect, national security, and that involves a specified biological, chemical, radiological, or nuclear agent or agents, or a specified disease or condition that may be attributable to such an agent or agents - in this case, 2009 H1N1 influenza virus.[1] Pursuant to section 564(b) of the Act (21 U.S.C. § 360bbb-3(b)), and on the basis of such determination, the Secretary of HHS then declared an emergency justifying the authorization of the emergency use of certain in vitro diagnostics for the detection of 2009 H1N1 influenza virus, subject to the terms of any authorization issued under 21 U.S.C. § 360bbb-3(a).

Having concluded that the criteria for issuance of this authorization under section 564(c) of the Act (21 U.S.C. § 360bbb-3(c)) are met, I am authorizing the emergency use of the *artus* Inf. A H1N1 2009 LC RT-PCR Kit (as described in the scope section of this letter (Section II)) for the diagnosis of 2009 H1N1 influenza virus infection in individuals with signs and symptoms of respiratory infection, subject to the terms of this authorization.

I. Criteria for Issuance of Authorization

I have concluded that the emergency use of the *artus* Inf. A H1N1 2009 LC RT-PCR Kit for the diagnosis of 2009 H1N1 influenza virus infection in individuals with signs and symptoms of respiratory infection meets the criteria for issuance of an authorization under section 564(c) of the Act, because I have concluded that:

1. The 2009 H1N1 influenza virus can cause influenza, a serious or life threatening disease or condition to humans infected by this virus;

2. Based on the totality of scientific evidence available to FDA, it is reasonable to believe that the *artus* Inf. A H1N1 2009 LC RT-PCR Kit may be effective for the diagnosis of 2009 H1N1 influenza virus infection, and that the known and potential benefits of the *artus* Inf. A H1N1 2009 LC RT-PCR Kit, when used in the diagnosis of 2009 H1N1 influenza virus infection, outweigh the known and potential risks of such product; and

3. There is no adequate, approved, and available alternative to the emergency use of the *artus* Inf. A H1N1 2009 LC RT-PCR Kit for the diagnosis of 2009 H1N1 influenza virus infection.[2]

II. Scope of Authorization

I have concluded, pursuant to section 564(d)(1) of the Act, that the scope of this authorization is limited to the use of the authorized *artus* Inf. A H1N1 2009 LC RT-PCR Kit for the diagnosis of 2009 H1N1 influenza virus infection in individuals with signs and symptoms of respiratory infection.

The Authorized *artus* Inf. A H1N1 2009 LC RT-PCR Kit Test:

The *artus* Inf. A H1N1 2009 LC RT-PCR Kit test is a real-time reverse transcription polymerase chain reaction (rRT-PCR) test for the *in vitro* qualitative detection and differentiation of 2009 H1N1 influenza viral RNA in nasopharyngeal swabs (NPS) from patients with signs and symptoms of respiratory infection. The *artus* Inf. A H1N1 2009 LC RT-PCR Kit is to be used in combination with the LightCycler® 2.0 Real Time PCR system and the EZ1 DSP Virus System. The assay is composed of two principal steps: (1) extraction of RNA from patient specimens, (2) one-step reverse transcription and PCR amplification using fluorogenic probes for detection.

The *artus* Inf. A H1N1 2009 LC RT-PCR Kit includes the following primer and probe sets:

- **H1F and H1C:** two primer-probe sets designed to detect the presence of two regions of the hemagglutinin (HA) gene specifically found in the 2009 H1N1 influenza virus. Probes specific to each amplicon are labeled with the same fluorophore for the direct detection in fluorescence channel 530.
- **InfA:** a one-primer pair-three-probes set designed to detect the presence of a well conserved region of the matrix (M) gene found in influenza A virus. The inclusion of three probes provides increased assurance that the assay will still detect influenza A in the event of a mutation occurring in the targeted region. Detection of InfA also occurs through fluorescence channel 530.
- **Internal Control (IC):** a primer-probe set designed to detect an artificial sequence with no homologies to influenza sequences. The IC serves as extraction control and is detected in fluorescence channel 610.

The *artus* Inf. A H1N1 2009 LC RT-PCR Kit also includes the following control materials:

- **Influenza A Matrix Positive Control** and **2009 H1N1 Positive Control.**

A Positive Control for the influenza A matrix gene is included in the Influenza A Master and a positive control for the 2009 H1N1 HA gene is included in the Influenza H1N1 Master to ensure that the assay reagents and instruments are functioning as intended for the detection of influenza A virus and 2009 H1N1 influenza virus. Both controls must generate a positive response in order for the run to be considered valid.

- **Negative (no template) Control.**
  A Negative Control ("no template") is needed to control for sample-to-sample carryover or contamination of reagents with target sequences. Nuclease-free PCR grade water is provided with the *artus* kit as a negative (no-template) control.

The *artus* Inf. A H1N1 2009 LC RT-PCR Kit requires the following hardware with corresponding software:

- **EZ1 Advanced Instrument** (QIAGEN, cat. no. 9001410) with the EZ1 DSP Virus Card v. 2.0 (QIAGEN, cat. no. 9018306).
- **LightCycler® 2.0** instrument with software v. 4.1 (Roche Diagnostics).

The *artus* Inf. A H1N1 2009 LC RT-PCR Kit requires the use of the following additional reagents/materials:

- **EZ1 DSP Virus Kit** (QIAGEN, cat. no. 62724).
- **LightCycler® Multicolor Demo Set** (Roche Applied Science, cat. no. 03 624 854 001).
- **LightCycler® Capillaries**, 20 µl (Roche Applied Science, cat. no. 04 929 292 001).
- **LightCycler® Cooling Block** and centrifuge adaptors (Roche Applied Science, cat. no. 11 909 312 001).
- **LightCycler® Capping Tool** (Roche Applied Science, cat. no. 03 357 317 001)

The above described *artus* Inf. A H1N1 2009 LC RT-PCR Kit, when labeled consistently with the labeling authorized by FDA, entitled *artus®* Inf. A H1N1 2009 LC RT PCR Kit Protocol, (available at *http://www.fda.gov/MedicalDevices/Safety/EmergencySituations/ucm161496.htm*), as may be revised with written permission of FDA, is authorized to be distributed to and used by CLIA High Complexity Laboratories under this EUA, despite the fact that it does not meet certain requirements otherwise required by federal law.

The above described *artus* Inf. A H1N1 2009 LC RT-PCR Kit is authorized to be accompanied by the following information pertaining to the emergency use, which is authorized to be made available to healthcare providers and patients:

- **Fact Sheet for Healthcare Providers: Interpreting *artus®* Inf. A H1N1 2009 LC RT-PCR Kit Test Results**

- **Fact Sheet for Patients: Understanding the *artus*® Inf. A H1N1 2009 LC RT-PCR Kit Test Results**

As described in section IV below, QIAGEN is also authorized to make available additional information relating to the emergency use of the authorized *artus* Inf. A H1N1 2009 LC RT-PCR Kit that is consistent with, and does not exceed, the terms of this letter of authorization.

I have concluded, pursuant to section 564(d)(2) of the Act, that it is reasonable to believe that the known and potential benefits of the authorized *artus*® Inf. A H1N1 2009 LC RT-PCR Kit in the specified population, when used for diagnosis of 2009 H1N1 influenza virus infection, outweigh the known and potential risks of such a product.

I have concluded, pursuant to section 564(d)(3) of the Act, based on the totality of scientific evidence available to FDA, that it is reasonable to believe that the authorized *artus*® Inf. A H1N1 2009 LC RT-PCR Kit may be effective in the diagnosis of 2009 H1N1 influenza virus infection pursuant to section 564(c)(2)(A) of the Act. The FDA has reviewed the scientific information available including the information supporting the conclusions described in Section I above, and concludes that the authorized *artus*® Inf. A H1N1 2009 LC RT-PCR Kit, when used to diagnose 2009 H1N1 influenza virus infection in the specified population, meets the criteria set forth in section 564(c) of the Act concerning safety and potential effectiveness.

The emergency use of the authorized *artus*® Inf. A H1N1 2009 LC RT-PCR Kit under this EUA must be consistent with, and may not exceed, the terms of this letter, including the scope and the conditions of authorization set forth below. Subject to the terms of this EUA and under the circumstances set forth in the Secretary of HHS's determination under section 564(b)(1)(C) described above and the Secretary of HHS's corresponding declaration under section 564(b)(1), the *artus*® Inf. A H1N1 2009 LC RT-PCR Kit described above is authorized to diagnose 2009 H1N1 influenza virus infection in individuals with signs and symptoms of respiratory infection.

This EUA will cease to be effective when the declaration of emergency is terminated under section 564(b)(2) of the Act or when the EUA is revoked under section 564(g) of the Act.

III. Waiver of Certain Requirements

I am waiving the following requirements for the *artus*® Inf. A H1N1 2009 LC RT-PCR Kit during the duration of this emergency use authorization:

- Current good manufacturing practice requirements, including the quality system requirements under 21 CFR Part 820 with respect to the design, manufacture, packaging, labeling, storage, and distribution of the *artus* Inf. A H1N1 2009 LC RT-PCR Kit.

- Labeling requirements for cleared, approved, or investigational devices, including labeling requirements under 21 CFR 809.10 and 809.30, except for the intended use statement (21 CFR 809.10(a)(2), (b)(2)), adequate directions for use (21 U.S.C. 352(f)), (21 CFR 809.10(b)(5) and (8)), any appropriate limitations on the use of the device including information required under 21 CFR 809.10(a)(4), and any available information regarding performance of the device, including requirements under 21 CFR 809.10(b)(12).

IV. Conditions of Authorization

Pursuant to section 564 of the Act, I am establishing the following conditions on this authorization:

QIAGEN

A. QIAGEN will distribute the authorized *artus*® Inf. A H1N1 2009 LC RT-PCR Kit with the authorized labeling, as may be revised with written permission of FDA, only to CLIA High Complexity Laboratories.

B. QIAGEN will provide to the CLIA High Complexity Laboratories the authorized *artus*® Inf. A H1N1 2009 LC RT-PCR Kit Fact Sheet for Healthcare Providers and the authorized *artus* Inf. A H1N1 2009 LC RT-PCR Kit Fact Sheet for Patients.

C. QIAGEN will make available on its website the authorized *artus*® Inf. A H1N1 2009 LC RT-PCR Kit Fact Sheet for Healthcare Providers and the authorized *artus*® Inf. A H1N1 2009 LC RT-PCR Kit Fact Sheet for Patients.

D. QIAGEN will inform state and/or local public health authority(ies) of this EUA, including the terms and conditions herein.

E. All advertising and promotional descriptive printed matter relating to the use of the authorized *artus*® Inf. A H1N1 2009 LC RT-PCR Kit shall be consistent with the Fact Sheets and authorized labeling, as well as the terms set forth in this EUA and other requirements set forth in the Act and FDA regulations.

F. All advertising and promotional descriptive printed matter relating to the use of the authorized *artus*® Inf. A H1N1 2009 LC RT-PCR Kit shall clearly and conspicuously state that:

- This test has not been FDA cleared or approved;

- FDA has not determined that this test may be performed in settings with certificates of waiver under the Clinical Laboratory Improvement Amendments of 1988 (CLIA), 42 U.S.C. § 263a;

- This test has been authorized by FDA under an Emergency Use Authorization;

- This test has been authorized only for the diagnosis of 2009 H1N1 influenza virus and not for diagnosis of any other viruses or pathogens;

- This test is only authorized for the duration of the declaration of emergency under section 564(b)(1) of the Federal Food, Drug, and Cosmetic Act, 21 U.S.C. § 360bbb-3(b)(1), unless the authorization is revoked sooner, and
- The declaration of emergency will expire on April 26, 2010, unless it is terminated sooner or renewed.

G. No advertising or promotional descriptive printed matter relating to the use of the authorized *artus*® Inf. A H1N1 2009 LC RT-PCR Kit may represent or suggest that this test is safe or effective for the diagnosis of 2009 H1N1 influenza virus.

H. QIAGEN will ensure that CLIA High Complexity Laboratories using the authorized *artus*® Inf. A H1N1 2009 LC RT-PCR Kit have a process in place for reporting test results to healthcare providers and federal, state and/or local public health authorities, as appropriate.

I. QIAGEN will track adverse events and report to FDA as required under 21 CFR part 803.

J. Through a process of inventory control, QIAGEN will maintain records of device usage.

K. QIAGEN will collect information on the performance of the assay and report to FDA any suspected occurrence of false positive or false negative results of which QIAGEN becomes aware.

L. QIAGEN is authorized to make available additional information relating to the emergency use of the authorized *artus*® Inf. A H1N1 2009 LC RT-PCR Kit that is consistent with, and does not exceed, the terms of this letter of authorization.

M. Only QIAGEN may request changes to the authorized *artus*® Inf. A H1N1 2009 LC RT-PCR Kit Fact Sheet for Healthcare Providers or the authorized *artus*® Inf. A H1N1 2009 LC RT-PCR Kit Fact Sheet for Patients. Such requests will be made by contacting FDA concerning FDA review and approval.

CLIA High Complexity Laboratories

N. CLIA High Complexity Laboratories will include with reports of the results of the *artus*® Inf. A H1N1 2009 LC RT-PCR Kit the authorized Fact Sheet for Healthcare Providers and the authorized Fact Sheet for Patients.

O. CLIA High Complexity Laboratories will use the QIAGEN EZ1 Advanced Instrument for nucleic acid extraction and perform the assay on the LightCycler® 2.0 Real Time PCR system.

P. CLIA High Complexity Laboratories will have a process in place for reporting test results to healthcare providers and federal, state and/or local public health authorities, as appropriate.

Q. CLIA High Complexity Laboratories will collect information on the performance of the assay, and report to QIAGEN any suspected occurrence of false positive or false negative results of which CLIA High Complexity Laboratories become aware.

R. CLIA High Complexity Laboratories will clearly and conspicuously state on reports of the results of the *artus*® Inf. A H1N1 2009 LC RT-PCR Kit that this test is only authorized for the diagnosis of 2009 H1N1 influenza virus and not for seasonal influenza A, B, or any other virus or pathogen.

QIAGEN and CLIA High Complexity Laboratories

S. QIAGEN and CLIA High Complexity Laboratories will ensure that any records associated with this EUA are maintained until notified by FDA. Such records will be made available to FDA for inspection upon request.

The emergency use of the authorized *artus*® Inf. A H1N1 2009 LC RT-PCR Kit as described in this letter of authorization must comply with the conditions above and all other terms of this authorization.

V. Duration of Authorization

This EUA will be effective until the declaration of emergency is terminated under section 564(b)(2) of the Act or the EUA is revoked under section 564(g) of the Act.

Margaret A. Hamburg, M.D.
Commissioner of Food and Drugs

[1] Memorandum, Determination Pursuant to §564 of the Federal Food, Drug, and Cosmetic Act (April 26, 2009).
[2] No other criteria of issuance have been prescribed by regulation under section 564(c)(4) of the Act.

(6) The Authorization for the IMDx 2009 Influenza A H1N1 Real-Time RT–PCR Assay issued on March 22, 2010, follows and provides an explanation of the reasons for its issuance, as required by section 564(h)(1) of the act:

Dr. Phillip T. Moen, Jr.
Director, Product Development
IntelligentMDx
19 Blackstone Street
Cambridge, MA 02139

Dear Dr. Moen:

This letter is in response to your request that the Food and Drug Administration (FDA) issue an Emergency Use Authorization (EUA) for emergency use of the IMDx 2009 Influenza A H1N1 Real-Time RT-PCR Assay for the diagnosis of 2009 H1N1 influenza virus infection in patients with signs and symptoms of respiratory infection, pursuant to section 564 of the Federal Food, Drug, and Cosmetic Act (the Act) (21 U.S.C. § 360bbb-3) by CLIA High Complexity Laboratories, which are laboratories certified under the Clinical Laboratory Improvement Amendments of 1988, 42 U.S.C. § 263a, to perform high complexity tests.

On April 26, 2009, pursuant to section 564(b)(1)(C) of the Act (21 U.S.C. § 360bbb-3(b)(1)(C)), the Secretary of the Department of Health and Human Services (HHS) determined that there is a public health emergency under 42 U.S.C. § 247d that affects, or has a significant potential to affect, national security, and that involves a specified biological, chemical, radiological, or nuclear agent or agents, or a specified disease or condition that may be attributable to such an agent or agents - in this case, 2009 H1N1 influenza virus.[1] Pursuant to section 564(b) of the Act (21 U.S.C. § 360bbb-3(b)), and on the basis of such determination, the Secretary of HHS then declared an emergency justifying the authorization of the emergency use of certain in vitro diagnostics for the detection of 2009 H1N1 influenza virus, subject to the terms of any authorization issued under 21 U.S.C. § 360bbb-3(a).

Having concluded that the criteria for issuance of this authorization under section 564(c) of the Act (21 U.S.C. § 360bbb-3(c)) are met, I am authorizing the emergency use of the IMDx 2009 Influenza A H1N1 Real-Time RT-PCR Assay (as described in the scope section of this letter (Section II)) for the diagnosis of 2009 H1N1 influenza virus infection in individuals with signs and symptoms of respiratory infection, subject to the terms of this authorization.

I. Criteria for Issuance of Authorization

I have concluded that the emergency use of the IMDx 2009 Influenza A H1N1 Real-Time RT-PCR Assay for the diagnosis of 2009 H1N1 influenza virus infection in individuals with signs and symptoms of respiratory infection meets the criteria for issuance of an authorization under section 564(c) of the Act, because I have concluded that:

1. The 2009 H1N1 influenza virus can cause influenza, a serious or life threatening disease or condition to humans infected by this virus;

2. Based on the totality of scientific evidence available to FDA, it is reasonable to believe that the IMDx 2009 Influenza A H1N1 Real-Time RT-PCR Assay may be effective for the diagnosis of 2009 H1N1 influenza virus infection, and that the known and potential benefits of the IMDx 2009 Influenza A H1N1 Real-Time RT-PCR Assay, when used in the diagnosis of 2009 H1N1 influenza virus infection, outweigh the known and potential risks of such product; and

3. There is no adequate, approved, and available alternative to the emergency use of the IMDx 2009 Influenza A H1N1 Real-Time RT-PCR Assay for the diagnosis of 2009 H1N1 influenza virus infection.[2]

II. Scope of Authorization

I have concluded, pursuant to section 564(d)(1) of the Act, that the scope of this authorization is limited to the use of the authorized IMDx 2009 Influenza A H1N1 Real-Time RT-PCR Assay for the diagnosis of 2009 H1N1 influenza virus infection in individuals with signs and symptoms of respiratory infection.

The Authorized IMDx 2009 Influenza A H1N1 Real-Time RT-PCR Assay:

The IMDx 2009 Influenza A H1N1 Real-Time RT-PCR Assay is a real-time reverse transcriptase PCR (rRT-PCR) for the *in vitro* qualitative detection and differentiation of 2009 H1N1 influenza viral RNA in upper respiratory tract specimens (such as nasopharyngeal swabs (NPS), nasal swabs (NS), throat swabs (TS), nasal aspirates (NA), nasal washes (NW), and dual nasopharyngeal/throat swabs (NPS/TS)) from patients with signs and symptoms of respiratory infection. The testing procedure consists of nucleic acid extraction with the Qiagen QIAamp Viral RNA Mini Kit followed by rRT-PCR on the Applied Biosystems 7500 Real-Time PCR System, 7500 Fast Real-Time PCR System, or the 7500 Fast Dx Real-Time PCR Instrument.

The IMDx 2009 Influenza A H1N1 Real-Time RT-PCR Assay includes the following primer and probe sets:
- **INF A:** detects a conserved region of the matrix (M) gene that is present in both seasonal and 2009 H1N1 influenza A viruses.
- **2009 H1N1:** detects a region of the hemagglutinin (HA) gene found in the 2009 H1N1 influenza virus.
- **Extraction/Process Control:** detects an RNA sequence in whole bacteriophage MS2 that is noncompetitive with the INFA and 2009 H1N1 2009 targets.

The IMDx 2009 Influenza A H1N1 Real-Time RT-PCR Assay also includes the following control materials:
- **Bacteriophage MS2 Extraction/Process Control** is added to every patient sample and is carried through all steps of the procedure from nucleic acid isolation and purification through amplification to ensure that effective nucleic acid extraction is achieved and to monitor for inhibition of RT-PCR.
- **Negative Control** consists of viral transport media containing MS2 bacteriophage and is taken through both nucleic acid extraction and RT-PCR processes to demonstrate that all extraction and amplification reagents are free of target influenza RNA and amplicons and to ensure that detection of target genes is not due to false positive results.
- **No Template Control** consists of nuclease free water and is included in each RT-PCR run to demonstrate that amplification reagents are free of target influenza and MS2 RNA and amplicons.
- **Positive Controls** consist of separate in vitro transcribed RNAs containing targets recognized by the INF A and 2009 H1N1 detection systems and are included in each RT-PCR run to demonstrate that these detection systems are operating at the required level of sensitivity.

The IMDx 2009 Influenza A H1N1 Real-Time RT-PCR Assay requires the following Applied Biosystems hardware with corresponding software:
- 7500 Real-Time PCR System (SDS v1.4 Software or 7500 Software v2.01), or

- 7500 Fast Real-Time PCR System (SDS v1.4 Software or 7500 Software v2.01), or
- 7500 Fast Dx Real-Time PCR Instrument (SDS v1.4 Software)

The IMDx 2009 Influenza A H1N1 Real-Time RT-PCR Assay requires the use of the following additional reagents/materials:
- Qiagen QIAamp Viral RNA Mini Kit

The above described IMDx 2009 Influenza A H1N1 Real-Time RT-PCR Assay, when labeled consistently with the labeling authorized by FDA, entitled IntelligentMDx IMDx 2009 Influenza A H1N1 Real-Time RT-PCR Assay Package Insert (available at *http://www.fda.gov/MedicalDevices/Safety/EmergencySituations/ucm161496.htm*), as may be revised with written permission of FDA, is authorized to be distributed to and used by CLIA High Complexity Laboratories under this EUA, despite the fact that it does not meet certain requirements otherwise required by federal law.

The above described IMDx 2009 Influenza A H1N1 Real-Time RT-PCR Assay is authorized to be accompanied by the following information pertaining to the emergency use, which is authorized to be made available to healthcare providers and patients:

- **Fact Sheet for Healthcare Providers: Interpreting IMDx 2009 Influenza A H1N1 Real-Time RT-PCR Assay Results**

- **Fact Sheet for Patients: Understanding IMDx 2009 Influenza A H1N1 Real-Time RT-PCR Assay Results**

As described in section IV below, IntelligentMDX is also authorized to make available additional information relating to the emergency use of the authorized IMDx 2009 Influenza A H1N1 Real-Time RT-PCR Assay that is consistent with, and does not exceed, the terms of this letter of authorization.

I have concluded, pursuant to section 564(d)(2) of the Act, that it is reasonable to believe that the known and potential benefits of the authorized IMDx 2009 Influenza A H1N1 Real-Time RT-PCR Assay in the specified population, when used for diagnosis of 2009 H1N1 influenza virus infection, outweigh the known and potential risks of such a product.

I have concluded, pursuant to section 564(d)(3) of the Act, based on the totality of scientific evidence available to FDA, that it is reasonable to believe that the authorized IMDx 2009 Influenza A H1N1 Real-Time RT-PCR Assay may be effective in the diagnosis of 2009 H1N1 influenza virus infection pursuant to section 564(c)(2)(A) of the Act. The FDA has reviewed the scientific information available including the information supporting the conclusions described in Section I above, and concludes that the authorized IMDx 2009 Influenza A H1N1 Real-Time RT-PCR Assay, when used to diagnose 2009 H1N1 influenza virus infection in the specified population, meets the criteria set forth in section 564(c) of the Act concerning safety and potential effectiveness.

The emergency use of the authorized IMDx 2009 Influenza A H1N1 Real-Time RT-PCR Assay under this EUA must be consistent with, and may not exceed, the terms of this letter, including the scope and the conditions of authorization set forth below. Subject to the terms of this EUA and under the circumstances set forth in the Secretary of HHS's determination under section 564(b)(1)(C) described above and the Secretary of HHS's corresponding declaration under section 564(b)(1), the IMDx 2009 Influenza A H1N1 Real-Time RT-PCR Assay described above is authorized to diagnose 2009 H1N1 influenza virus infection in individuals with signs and symptoms of respiratory infection.

This EUA will cease to be effective when the declaration of emergency is terminated under section 564(b)(2) of the Act or when the EUA is revoked under section 564(g) of the Act.

III. Waiver of Certain Requirements

I am waiving the following requirements for the IMDx 2009 Influenza A H1N1 Real-Time RT-PCR Assay during the duration of this emergency use authorization:

- Current good manufacturing practice requirements, including the quality system requirements under 21 CFR Part 820 with respect to the design, manufacture, packaging, labeling, storage, and distribution of the IMDx 2009 Influenza A H1N1 Real-Time RT-PCR Assay.

- Labeling requirements for cleared, approved, or investigational devices, including labeling requirements under 21 CFR 809.10 and 809.30, except for the intended use statement (21 CFR 809.10(a)(2), (b)(2)), adequate directions for use (21 U.S.C. 352(f)), (21 CFR 809.10(b)(5) and (8)), any appropriate limitations on the use of the device including information required under 21 CFR 809.10(a)(4), and any available information regarding performance of the device, including requirements under 21 CFR 809.10(b)(12).

IV. Conditions of Authorization

Pursuant to section 564 of the Act, I am establishing the following conditions on this authorization:

IntelligentMDx

A. IntelligentMDx will distribute the authorized IMDx 2009 Influenza A H1N1 Real-Time RT-PCR Assay with the authorized labeling, as may be revised with written permission of FDA, only to CLIA High Complexity Laboratories.

B. IntelligentMDx will provide to the CLIA High Complexity Laboratories the authorized IMDx 2009 Influenza A H1N1 Real-Time RT-PCR Assay Fact Sheet for Healthcare Providers and the authorized IMDx 2009 Influenza A H1N1 Real-Time RT-PCR Assay Fact Sheet for Patients.

C. IntelligentMDx will make available on its website the authorized IMDx 2009 Influenza A H1N1 Real-Time RT-PCR Assay Fact Sheet for Healthcare Providers and the authorized IMDx 2009 Influenza A H1N1 Real-Time RT-PCR Assay Fact Sheet for Patients.

D. IntelligentMDx will inform state and/or local public health authority(ies) of this EUA, including the terms and conditions herein.

E. All advertising and promotional descriptive printed matter relating to the use of the authorized IMDx 2009 Influenza A H1N1 Real-Time RT-PCR Assay shall be consistent with the Fact Sheets and authorized labeling, as well as the terms set forth in this EUA and other requirements set forth in the Act and FDA regulations.

F. All advertising and promotional descriptive printed matter relating to the use of the IMDx 2009 Influenza A H1N1 Real-Time RT-PCR Assay shall clearly and conspicuously state that:

- This test has not been FDA cleared or approved;
- FDA has not determined that this test may be performed in settings with certificates of waiver under the Clinical Laboratory Improvement Amendments of 1988 (CLIA), 42 U.S.C. § 263a;
- This test has been authorized by FDA under an Emergency Use Authorization;
- This test has been authorized only for the diagnosis of 2009 H1N1 influenza virus and not for the diagnosis of any other viruses or pathogens;
- This test is only authorized for the duration of the declaration of emergency under section 564(b)(1) of the Federal Food, Drug, and Cosmetic Act, 21 U.S.C. § 360bbb-3(b)(1), unless the authorization is revoked sooner; and
- The declaration of emergency will expire on April 26, 2010, unless it is terminated sooner or renewed.

G.No advertising or promotional descriptive printed matter relating to the use of the authorized IMDx 2009 Influenza A H1N1 Real-Time RT-PCR Assay may represent or suggest that this test is safe or effective for the diagnosis of 2009 H1N1 influenza virus.

H. IntelligentMDx will ensure that CLIA High Complexity Laboratories using the authorized IMDx 2009 Influenza A H1N1 Real-Time RT-PCR Assay have a process in place for reporting test results to healthcare providers and federal, state and/or local public health authorities, as appropriate.

I. IntelligentMDx will track adverse events and report to FDA as required under 21 CFR part 803.

J. Through a process of inventory control, IntelligentMDx will maintain records of device usage.

K. IntelligentMDx will collect information on the performance of the assay, and report to FDA any suspected occurrence of false positive or false negative results of which IntelligentMDx becomes aware.

L. IntelligentMDx is authorized to make available additional information relating to the emergency use of the authorized IMDx 2009 Influenza A H1N1 Real-Time RT-PCR Assay that is consistent with, and does not exceed, the terms of this letter of authorization.

M. Only IntelligentMDx may request changes to the authorized IMDx 2009 Influenza A H1N1 Real-Time RT-PCR Assay Fact Sheet for Healthcare Providers or the authorized IMDx 2009 Influenza A H1N1 Real-Time RT-PCR Assay Fact Sheet for Patients. Such requests will be made by contacting FDA concerning FDA review and approval.

CLIA High Complexity Laboratories

N. CLIA High Complexity Laboratories will include with reports of the results of the IMDx 2009 Influenza A H1N1 Real-Time RT-PCR Assay the authorized Fact Sheet for Healthcare Providers and the authorized Fact Sheet for Patients.

O. CLIA High Complexity Laboratories will perform the assay on an Applied Biosystems 7500 Real-Time PCR System, 7500 Fast Real-Time PCR System, or the 7500 Fast Dx Real-Time PCR Instrument with the appropriate software.

P. CLIA High Complexity Laboratories will have a process in place for reporting test results to healthcare providers and federal, state and/or local public health authorities, as appropriate.

Q. CLIA High Complexity Laboratories will collect information on the performance of the assay, and report to IntelligentMDx any suspected occurrence of false positive or false negative results of which CLIA High Complexity Laboratories become aware.

R. CLIA High Complexity Laboratories will clearly and conspicuously state on reports of the results of the IMDx 2009 Influenza A H1N1 Real-Time RT-PCR Assay that this test is only authorized for the diagnosis of 2009 H1N1 influenza virus and not for seasonal influenza A, B, or any other virus or pathogen.

IntelligentMDx and CLIA High Complexity Laboratories

S. IntelligentMDx and CLIA High Complexity Laboratories will ensure that any records associated with this EUA are maintained until notified by FDA. Such records will be made available to FDA for inspection upon request.

The emergency use of the authorized IMDx 2009 Influenza A H1N1 Real-Time RT-PCR Assay as described in this letter of authorization must comply with the conditions above and all other terms of this authorization.

V. Duration of Authorization

This EUA will be effective until the declaration of emergency is terminated under section 564(b)(2) of the Act or the EUA is revoked under section 564(g) of the Act.

Margaret A. Hamburg, M.D.
Commissioner of Food and Drugs

[1] Memorandum, Determination Pursuant to §564 of the Federal Food, Drug, and Cosmetic Act (April 26, 2009).
[2] No other criteria of issuance have been prescribed by regulation under section 564(c)(4) of the Act.

(7) The Authorization for the Liat Influenza A/2009 H1N1 Assay issued on May 4, 2010, follows and provides an explanation of the reasons for its issuance, as required by section 564(h)(1) of the act:

Shuqi Chen, PhD
CEO
IQuum, Inc.
700 Nickerson Road
Marlborough, MA 01752

Dear Dr. Chen:

This letter is in response to your request that the Food and Drug Administration (FDA) issue an Emergency Use Authorization (EUA) for emergency use of the Liat™ Influenza A/2009 H1N1 Assay for the diagnosis of 2009 H1N1 influenza virus infection in patients with signs and symptoms of respiratory infection in conjunction with clinical and epidemiological risk factors, pursuant to section 564 of the Federal Food, Drug, and Cosmetic Act (the Act) (21 U.S.C. § 360bbb-3) by laboratories certified under the Clinical Laboratory Improvement Amendments of 1988 (CLIA), 42 U.S.C. § 263a, to perform moderate complexity tests and by laboratories certified under CLIA to perform high complexity tests.

On April 26, 2009, pursuant to section 564(b)(1)(C) of the Act (21 U.S.C. § 360bbb-3(b)(1)(C)), the Secretary of the Department of Health and Human Services (HHS) determined that there is a public health emergency under 42 U.S.C. § 247d that affects, or has a significant potential to affect, national security, and that involves a specified biological, chemical, radiological, or nuclear agent or agents, or a specified disease or condition that may be attributable to such an agent or agents - in this case, 2009 H1N1 influenza virus.[1] Pursuant to section 564(b) of the Act (21 U.S.C. § 360bbb-3(b)), and on the basis of such determination, the Secretary of HHS then declared an emergency justifying the authorization of the emergency use of certain in vitro diagnostics for the detection of 2009 H1N1 influenza virus, subject to the terms of any authorization issued under 21 U.S.C. § 360bbb-3(a).

Having concluded that the criteria for issuance of this authorization under section 564(c) of the Act (21 U.S.C. § 360bbb-3(c)) are met, I am authorizing the emergency use of the Liat Influenza A/2009 H1N1 Assay (as described in the scope section of this letter (Section II)) for the diagnosis of 2009 H1N1 influenza virus infection in individuals with signs and symptoms of respiratory infection in conjunction with clinical and epidemiological risk factors, subject to the terms of this authorization.

I. Criteria for Issuance of Authorization

I have concluded that the emergency use of the Liat Influenza A/2009 H1N1 Assay for the diagnosis of 2009 H1N1 influenza virus infection in individuals with signs and symptoms of respiratory infection in conjunction with clinical and epidemiological risk factors meets the criteria for issuance of an authorization under section 564(c) of the Act, because I have concluded that:

1. The 2009 H1N1 influenza virus can cause influenza, a serious or life threatening disease or condition to humans infected by this virus;

2. Based on the totality of scientific evidence available to FDA, it is reasonable to believe that the Liat Influenza A/2009 H1N1 Assay may be effective for the diagnosis of 2009 H1N1 influenza virus infection, and that the known and potential benefits of the Liat Influenza A/2009 H1N1 Assay, when used in the diagnosis of 2009 H1N1 influenza virus infection, outweigh the known and potential risks of such product; and

3. There is no adequate, approved, and available alternative to the emergency use of the Liat Influenza A/2009 H1N1 Assay for the diagnosis of 2009 H1N1 influenza virus infection.[2]

II. Scope of Authorization

I have concluded, pursuant to section 564(d)(1) of the Act, that the scope of this authorization is limited to the use of the authorized Liat Influenza A/2009 H1N1 Assay for the diagnosis of 2009 H1N1 influenza virus infection in individuals with signs and symptoms of respiratory infection.

The Authorized Liat Influenza A/2009 H1N1 Assay:

The Liat Influenza A/2009 H1N1 Assay is a rapid, automated multiplex real-time RT-PCR assay intended for use in laboratories certified under the Clinical Laboratory Improvement Amendments of 1988 (CLIA), 42 U.S.C. § 263a, to perform moderate complexity tests and in laboratories certified under CLIA to perform high complexity tests using the Liat Analyzer for the *in vitro* qualitative detection of influenza A virus and differentiation of 2009 H1N1 influenza viral RNA. The Liat Influenza A/2009 H1N1 Assay uses nasopharyngeal swab (NPS) specimens collected from patients with signs and symptoms of respiratory infection in conjunction with clinical and epidemiological risk factors. The assay targets a conserved region of the matrix gene of Influenza A viral RNA (Inf A target) and the hemagglutinin gene of 2009 H1N1 Influenza viral RNA (2009 H1N1 target). An Internal Process Control (IPC) is also included. The IPC is present to control for adequate processing of the target viruses and to monitor the presence of inhibitors in the RT-PCR reactions.

The Liat Influenza A/2009 H1N1 Assay is performed on the lab-in-a-tube technology platform. The system consists of a disposable Liat Influenza A/H1N1Assay Tube and the Liat Analyzer. The Liat Tube uses a flexible tube as a sample vessel. It contains all required unit dose reagents pre-packed in tube segments, separated by peelable seals, in the order of reagent use. The Liat Analyzer performs all assay steps from raw sample and report assay result automatically. During the testing process, multiple processing actuators of the analyzer compress the Liat Tube to selectively release reagents from tube segments, move the sample from one segment to another, and control reaction volume, temperature and time to conduct sample preparation, nucleic acid extraction, target enrichment, inhibitor removal, nucleic acid elution and real-time RT-PCR. An embedded microprocessor controls and coordinates the actions of these sample processors to perform all required assay processes within the closed Liat Tube.

The Liat Influenza A/2009 H1N1 Assay includes the following primer and probe sets:

- **InfA:** A single primer pair and probe were designed to recognize a conserved region of the matrix gene of Influenza A viral RNA. The specific probe for InfA is detected at 525 nm.
- **2009 H1N1:** Three primer pairs and two probes were designed to specifically detect a region of the hemagglutinin gene of 2009 H1N1 Influenza viral RNA but not react with other Influenza A strains of swine origin. Each of the probes for 2009 H1N1 are labeled with the same reporter dye allowing for detection at 630 nm.
- **IPC (Internal Process Control):** MS2 bacteriophage is pre-packed in each Liat tube. When conducting an assay, it is first mixed with sample and then goes through all the test process to monitor both the sample extraction process and RT-PCR reaction performance. The sample tube contains a primer pair and probe specifically designed for detection of a region of MS2 bacteriophage genome. The reporter probe for the IPC is labeled with a reporter dye that allows for detection at 710 nm.

The Liat Influenza A/2009 H1N1 Assay RNA also uses the following control materials:

- Liat Influenza A/2009 H1N1 Assay External Positive/Negative Control Kit (Cat # 20-03628, IQuum) and Liat Influenza Assay Quality Control Kit (Cat# 20-03643)
  - **External Negative Control** consists of Liat Swab Dilution Buffer. The negative control is run during the "add lot" process and is used to assess Liat sample tube validity and performance. Additional runs of the negative control can be run to determine if there is contamination resulting in false positive results.
  - **External Positive Control** of the assay is provided by the Liat Influenza A/2009 H1N1 Positive Control Tube. This sample is also run during the "add-lot' process and is used to assess Liat sample tube validity and performance. This control also ensures that the instrument is functioning as intended.

The Liat Influenza A/2009 H1N1 Assay requires the following hardware:

- Liat Analyzer

The Liat Influenza A/2009 H1N1 Assay requires the use of the following additional reagents/materials:

- Liat Influenza A/2009 H1N1 Assay Tube (Cat # 20-03701, IQuum)
- Liat NP Swab Collection Kit (Liat Dilution Buffer) (Cat # 20-03641, IQuum)
- Liat NP Swab Collection Kit (UTM) (Cat # 20-03642, IQuum)

The above described Liat Influenza A/2009 H1N1 Assay, when labeled consistently with the labeling authorized by FDA, entitled Liat Influenza A/2009 H1N1 Assay Package Insert (available at *http://www.fda.gov/MedicalDevices/Safety/EmergencySituations/ucm161496.htm*), as may be revised with written permission of FDA, is authorized to be distributed to and used by CLIA High Complexity and Moderate Complexity Laboratories, under this EUA, despite the fact that it does not meet certain requirements otherwise required by federal law.

The above described Liat Influenza A/2009 H1N1 Assay is authorized to be accompanied by the following information pertaining to the emergency use, which is authorized to be made available to healthcare providers and patients:

- **Fact Sheet for Healthcare Providers: Interpreting the Liat Influenza A/2009 H1N1 Assay Results**
- **Fact Sheet for Patients: Understanding the Liat Influenza A/2009 H1N1 Assay Results**

As described in section IV below, IQuum is also authorized to make available additional information relating to the emergency use of the authorized Liat Influenza A/2009 H1N1 Assay that is consistent with, and does not exceed, the terms of this letter of authorization.

I have concluded, pursuant to section 564(d)(2) of the Act, that it is reasonable to believe that the known and potential benefits of the authorized Liat Influenza A/2009 H1N1 Assay in the specified population, when used for diagnosis of 2009 H1N1 influenza virus infection, outweigh the known and potential risks of such a product.

I have concluded, pursuant to section 564(d)(3) of the Act, based on the totality of scientific evidence available to FDA, that it is reasonable to believe that the authorized Liat Influenza A/2009 H1N1 Assay may be effective in the diagnosis of 2009 H1N1 influenza virus infection pursuant to section 564(c)(2)(A) of the Act. The FDA has reviewed the scientific information available including the information supporting the conclusions described in Section I above, and concludes that the authorized Liat Influenza A/2009 H1N1 Assay, when used to diagnose 2009 H1N1 influenza virus infection in the specified population, meets the criteria set forth in section 564(c) of the Act concerning safety and potential effectiveness.

The emergency use of the authorized Liat Influenza A/2009 H1N1 Assay under this EUA must be consistent with, and may not exceed, the terms of this letter, including the scope and the conditions of authorization set forth below. Subject to the terms of this EUA and under the circumstances set forth in the Secretary of HHS's determination under section 564(b)(1)(C) described above and the Secretary of HHS's corresponding declaration under section 564(b)(1), the Liat Influenza A/2009 H1N1 Assay described above is authorized to diagnose 2009 H1N1 influenza virus infection in individuals with signs and symptoms of respiratory infection.

This EUA will cease to be effective when the declaration of emergency is terminated under section 564(b)(2) of the Act or when the EUA is revoked under section 564(g) of the Act.

III. Waiver of Certain Requirements

I am waiving the following requirements for the Liat Influenza A/2009 H1N1 Assay during the duration of this emergency use authorization:

- Current good manufacturing practice requirements, including the quality system requirements under 21 CFR Part 820 with respect to the design, manufacture, packaging, labeling, storage, and distribution of the Liat Influenza A/2009 H1N1 Assay.
- Labeling requirements for cleared, approved, or investigational devices, including labeling requirements under 21 CFR 809.10 and 809.30, except for the intended use statement (21 CFR 809.10(a)(2), (b)(2)), adequate directions for use (21 U.S.C. 352(f)), (21 CFR 809.10(b)(5) and (8)), any appropriate limitations on the use of the device including information required under 21 CFR 809.10(a)(4), and any available information regarding performance of the device, including requirements under 21 CFR 809.10(b)(12).

IV. Conditions of Authorization

Pursuant to section 564 of the Act, I am establishing the following conditions on this authorization:

IQuum

A. IQuum will distribute the authorized Liat Influenza A/2009 H1N1 Assay with the authorized labeling, as may be revised with written permission of FDA, only to CLIA High Complexity or Moderate Complexity Laboratories.

B. IQuum will provide to the CLIA High Complexity and Moderate Complexity Laboratories the authorized Liat Influenza A/2009 H1N1 Assay Fact Sheet for Healthcare Providers and the authorized Liat Influenza A/2009 H1N1 Assay Fact Sheet for Patients.

C. IQuum will make available on its website the authorized Liat Influenza A/2009 H1N1 Assay Fact Sheet for Healthcare Providers and the authorized Liat Influenza A/2009 H1N1 Assay Fact Sheet for Patients.

D. IQuum will inform state and/or local public health authority(ies) of this EUA, including the terms and conditions herein.

E. All advertising and promotional descriptive printed matter relating to the use of the authorized Liat Influenza A/2009 H1N1 Assay shall be consistent with the Fact Sheets and authorized labeling, as well as the terms set forth in this EUA and other requirements set forth in the Act and FDA regulations.

F. All advertising and promotional descriptive printed matter relating to the use of the authorized Liat Influenza A/2009 H1N1 Assay shall clearly and conspicuously state that:

- This test has not been FDA cleared or approved;
- FDA has not determined that this test may be performed in settings with certificates of waiver under the Clinical Laboratory Improvement Amendments of 1988 (CLIA), 42 U.S.C. § 263a;
- This test has been authorized by FDA under an Emergency Use Authorization;
- This test has been authorized only for the diagnosis of 2009 H1N1 influenza virus and not for the diagnosis of any other viruses or pathogens;
- This test is only authorized for the duration of the declaration of emergency under section 564(b)(1) of the Federal Food, Drug, and Cosmetic Act, 21 U.S.C. § 360bbb-3(b)(1), unless the authorization is revoked sooner; and
- The declaration of emergency will expire on June 23, 2010, unless it is terminated sooner or renewed.

G. No advertising or promotional descriptive printed matter relating to the use of the authorized Liat Influenza A/2009 H1N1 Assay may represent or suggest that this test is safe or effective for the diagnosis of 2009 H1N1 influenza virus.

H. IQuum will ensure that CLIA High Complexity and Moderate Complexity Laboratories using the authorized Liat Influenza A/2009 H1N1 Assay have a process in place for reporting test results to healthcare providers and federal, state and/or local public health authorities, as appropriate.

I. IQuum will track adverse events and report to FDA as required under 21 CFR part 803.

J. Through a process of inventory control, IQuum will maintain records of device usage.

K. IQuum will collect information on the performance of the assay and report to FDA any suspected occurrence of false positive or false negative results of which IQuum becomes aware.

L. IQuum is authorized to make available additional information relating to the emergency use of the authorized Liat Influenza A/2009 H1N1 Assay that is consistent with, and does not exceed, the terms of this letter of authorization.

M. Only IQuum may request changes to the authorized Liat Influenza A/2009 H1N1 Assay Fact Sheet for Healthcare Providers or the authorized Liat Influenza A/2009 H1N1 Assay Fact Sheet for Patients. Such requests will be made by contacting FDA concerning FDA review and approval.

CLIA High Complexity and Moderate Complexity Laboratories

N. CLIA High Complexity and Moderate Complexity Laboratories will include with reports of the results of the Liat Influenza A/2009 H1N1 Assay the authorized Fact Sheet for Healthcare Providers and the authorized Fact Sheet for Patients.

O. CLIA High Complexity and Moderate Complexity Laboratories will perform the assay on the Liat system.

P. CLIA High Complexity and Moderate Complexity Laboratories will have a process in place for reporting test results to healthcare providers and federal, state and/or local public health authorities, as appropriate.

Q. CLIA High Complexity and Moderate Complexity Laboratories will collect information on the performance of the assay, and report to IQuum any suspected occurrence of false positive or false negative results of which CLIA High Complexity and Moderate Complexity Laboratories become aware.

R. CLIA High Complexity and Moderate Complexity Laboratories will clearly and conspicuously state on reports of the results of the Liat Influenza A/2009 H1N1 Assay that this test is only authorized for the diagnosis of 2009 H1N1 influenza virus and not for seasonal influenza A, B, or any other pathogen.

IQuum and CLIA High Complexity and Moderate Complexity Laboratories

S. IQuum and CLIA High Complexity and Moderate Complexity Laboratories will ensure that any records associated with this EUA are maintained until notified by FDA. Such records will be made available to FDA for inspection upon request.

The emergency use of the authorized Liat Influenza A/2009 H1N1 Assay as described in this letter of authorization must comply with the conditions above and all other terms of this authorization.

V. Duration of Authorization

This EUA will be effective until the declaration of emergency is terminated under section 564(b)(2) of the Act or the EUA is revoked under section 564(g) of the Act

Margaret A. Hamburg, M.D.
Commissioner of Food and Drugs

[1] Memorandum, Determination Pursuant to §564 of the Federal Food, Drug, and Cosmetic Act (April 26, 2009).
[2] No other criteria of issuance have been prescribed by regulation under section 564(c)(4) of the Act.

Dated: June 15, 2010.

David Dorsey,

Acting Deputy Commissioner for Policy, Planning and Budget.

[FR Doc. 2010–14881 Filed 6–18–10; 8:45 am]

BILLING CODE 4160–01–S

DEPARTMENT OF HEALTH AND HUMAN SERVICES

Indian Health Service

American Indians Into Medicine; Notice of Competitive Grant Applications for American Indians Into Medicine Program

Announcement Type: New.

Funding Opportunity Number: HHS–2010–IHS–INMED–0001.

CFDA Number: 93.970.

Key Dates

Application Deadline: July 21, 2010.

Review Date: July 29, 2010.

Earliest Anticipated Start Date: September 1, 2010.

I. Funding Opportunity Description

Statutory Authority

The Indian Health Service (IHS) is accepting competitive grant applications for the American Indians into Medicine Program. This program is authorized under the authority of 25 U.S.C. 1616g (a), Indian Health Care Improvement Act, Public Law 94–437, as amended by Public Law 111–148.

Purpose

The purpose of the Indians into Medicine Program (INMED) is to augment the number of Indian health professionals serving Indians by encouraging Indians to enter the health professions and removing the multiple barriers to their entrance into the IHS and private practice among Indians.

This program is described at 93.970 in the Catalog of Federal Domestic Assistance. Costs will be determined in accordance with applicable Office of Management and Budget Circulars. The Public Health Service (PHS) is committed to achieving the health promotion and disease prevention objectives of Healthy People 2010, a PHS-led activity for setting priority areas. This program announcement is related to the priority area of Educational and Community-based programs. Potential applicants may obtain a copy of Healthy People 2010, summary report in print, Stock No. 017–001–00547–9, or via CD–ROM, Stock No. 107–001–00549–5, through the Superintendent of Documents, Government Printing Office, P.O. Box 371954, Pittsburgh, PA 15250–7945, (202) 512–1800. You may access this information via the Internet at the

following Web site: *http://www.health.gov/healthypeople*.

The PHS strongly encourages all grant and contract recipients to provide a smoke-free workplace and promote the non-use of all tobacco products. In addition, Public Law 103–227, the Pro-Children Act of 1994, prohibits smoking in certain facilities (or in some cases, any portion of the facility) in which regular or routine education, library, day care, health care, or early childhood development services are provided to children. This is consistent with the PHS mission to protect and advance the physical and mental health of the American people.

II. Award Information

Type of Awards: Grant.

Estimated Funds Available

The total amount identified for Fiscal Year 2010 is approximately $340,000 to provide support for an estimated two awards. The awards are for 12 months in duration and the awards are approximately $170,000 for each grant award. Awards under this announcement are subject to the availability of funds. In the absence of funding, the agency is under no obligation to make awards funded under this announcement.

Anticipated Number of Awards

Approximately two awards will be issued under this program announcement.

Project Period

4 years.

III. Eligibility Information

1. Eligible Applicants

Public and nonprofit private colleges and universities with medical and other allied health programs are eligible to apply for the grants. Public and nonprofit private colleges that operate nursing programs are not eligible under this announcement since the IHS currently funds the Nursing Recruitment grant program.

The existing INMED grant program at the University of North Dakota has as its target population Indian Tribes primarily within the States of North Dakota, South Dakota, Nebraska, Wyoming, and Montana. A college or university applying under this announcement must propose to conduct its program among Indian Tribes in States not currently served by the University of North Dakota INMED program.

2. Cost Sharing/Matching

The INMED program does not require matching funds or cost sharing.

3. Other Requirements

Required Affiliations—The grant applicant must submit official documentation indicating a Tribe's cooperation with and support of the program within the schools on its reservation and its willingness to have a Tribal representative serve on the program advisory board. Documentation must be in the form prescribed by the Tribe's governing body, *i.e.,* letter of support or Tribal resolution. Documentation must be submitted from every Tribe involved in the grant program. If application budgets exceed the stated dollar amount that is outlined within this announcement, it will not be considered for funding.

IV. Application and Submission Information

1. Obtaining Application Materials

The application package and instructions may be located at *http://www.Grants.gov* or *http://www.ihs.gov/NonMedicalPrograms/gogp/index.cfm?module=gogp_funding.* Information regarding the electronic application process may be directed to Paul Gettys, at (301) 443–2114 or *Paul.Gettys@ihs.gov.* The entire application package is available at: *http://www.grants.gov/Apply.* Detailed application instructions for this announcement are downloadable on *http://www.Grants.gov.*

2. Content and Form of Application Submission

The application must include the project narrative as an attachment to the application package.

Mandatory documents for all applications include:

- Application forms:
  - SF–424.
  - SF–424A.
  - SF–424B.
- Budget Narrative (must be single spaced).
- Project Narrative (must not exceed 12 pages).
- Tribal Resolution or Tribal Letter of Support (Tribal Organizations only).
- Biographical sketches for all Key Personnel.
- Disclosure of Lobbying Activities (SF–LLL) (if applicable).
- Documentation of current OMB A–133 required Financial Audit, if applicable. Acceptable forms of documentation include:
  - E-mail confirmation from Federal Audit Clearinghouse (FAC) that audits were submitted; or
  - Face sheets from audit reports. These can be found on the FAC Web site: *http://harvester.census.gov/fac/dissem/accessoptions.html?submit=Retrieve+Records.*

Public Policy Requirements

All Federal-wide public policies apply to IHS grants with exception of the Discrimination policy.

Requirements for Project and Budget Narratives

A. *Project Narrative:* This narrative should be a separate Word document that is no longer than 12 pages (*see* page limitations for each Part noted below) with consecutively numbered pages. Be sure to place all responses and required information in the correct section or they will not be considered or scored. If the narrative exceeds the page limit, only the first 12 pages will be reviewed. There are three parts to the narrative: Part A—Program Information; Part B—Program Planning and Evaluation; and Part C—Program Report. *See* below for additional details about what must be included in the narrative.

Part A: Program Information (6 Pages)

Section 1: Needs

a. Describe your legal status and organization.

b. State specific objectives of the project, and the extent to which they are measurable and quantifiable, significant to the needs of Indian people, logical, complete, and consistent with the purpose of Section 114 of the Indian Health Care Improvement Act.

c. Describe briefly what the project intends to accomplish. Identify the expected results, benefits, and outcomes or products to be derived from each objective of the project.

d. Provide a project specific work plan (milestone chart) which lists each objective, the tasks to be conducted in order to reach the objective, and the time frame needed to accomplish each task. Time frames should be projected in a realistic manner to assure that the scope of work can be completed within each budget period. (A work plan format is provided.)

e. In the case of proposed projects for identification of Indians with a potential for education or training in the health professions, include a method for assessing the potential of interested Indians for undertaking necessary education or training in such health professions.

f. State clearly the criteria by which the project's progress will be evaluated and by which the success of the project will be determined.

g. Explain the methodology that will be used to determine if the needs, goals, and objectives identified and discussed in the application are being met and if the results and benefits identified are being achieved.

h. Identify who will perform the evaluation and when.

Part B: Program Planning and Evaluation (3 Pages)

Section 1: Program Plans

a. Provide an organizational chart and describe the administrative, managerial and organizational arrangements and the facilities and resources to be utilized to conduct the proposed project (include in appendix).

b. Provide the name and qualifications of the project director or other individuals responsible for the conduct of the project; the qualifications of the principal staff carrying out the project; and a description of the manner in which the applicant's staff is or will be organized and supervised to carry out the proposed project. Include biographical sketches of key personnel (or job descriptions if the position is vacant) (include in appendix).

c. Describe any prior experience in administering similar projects.

d. Discuss the commitment of the organization, *i.e.,* although not required, the level of non-Federal support. List the intended financial participation, if any, of the applicant in the proposed project specifying the type of contributions such as cash or services, loans of full or part-time staff, equipment, space, materials or facilities or other contributions.

e. Describe the ability to provide outreach and recruitment for health professions to Indian communities including elementary and secondary schools and community colleges located on Indian reservations which will be served by the program.

f. Describe the organization's plan to incorporate a program advisory board comprised of representatives from the Tribes and communities which will be served by the program.

g. To the maximum extent feasible, employ qualified Indians in the program.

Section 2: Program Evaluation

a. Describe the current and proposed participation of Indians (if any) in your organization.

b. Identify the target Indian population to be served by your proposed project and the relationship of your organization to that population.

c. Describe the methodology to be used to access the target population.

d. Identify affiliation agreements with Tribal community colleges, the IHS, university affiliated programs, and other appropriate entities to enhance the education of Indian students.

e. Identify existing university tutoring, counseling and student support services.

Part C: Program Report (3 Pages)

a. Provide data and supporting documentation to substantiate need for recruitment.

b. Indicate the number of potential Indian students to be contacted and recruited as well as potential cost per student recruited. Those projects that have the potential to serve a greater number of Indians will be given first consideration.

c. Describe methodology to locate and recruit students with educational potential in a variety of health care fields. Primary recruitment efforts must be in the field of medicine with secondary efforts in other allied health fields such as pharmacy, dentistry, medical technology, x-ray technology, *etc.* The field of nursing is excluded since the IHS does fund the IHS Nursing Recruitment grant program.

B. *Budget Narrative:* This narrative must describe the budget requested and match the scope of work described the project narrative. The page limitation should not exceed 3 pages.

3. Submission Dates and Times

Applications must be submitted electronically through Grants.gov by July 21, 2010 at 12 midnight Eastern Standard Time (EST). Any application received after the application deadline will not be accepted for processing, and will be returned to the applicant(s) without further consideration for funding.

If technical challenges arise and assistance is required with the electronic application process, contact Grants.gov Customer Support via e-mail to *support@grants.gov* or at (800) 518–4726. Customer Support is available to address questions 24 hours a day, 7 days a week (except on Federal holidays). If problems persist, contact Paul Gettys, Division of Grants Policy (DGP) at *Paul.Gettys@ihs.gov* or at (301) 443–2114. Please be sure to contact Mr. Gettys at least ten days prior to the application deadline. Please do not contact the GPS until you have received a Grants.gov tracking number. In the event you are not able to obtain a tracking number, call the GPS as soon as possible.

If an applicant needs to submit a paper application instead of submitting electronically via Grants.gov, prior approval must be requested and obtained (*see* Section 6—Electronic Submission Requirements for additional information). The waiver must be documented in writing (e-mails are acceptable), *before* submitting a paper application. A copy of the written approval must be submitted along with the hardcopy that is mailed to the Division of Grants Operations (DGO) (Refer to Section VII to obtain the mailing address). Paper applications that are submitted without a waiver will be returned to the applicant without review or further consideration. Late applications will not be accepted for processing, will be returned to the applicant and will not be considered for funding.

4. Intergovernmental Review

Executive Order 12372 requiring intergovernmental review is not applicable to this program.

5. Funding Restrictions

- Pre award costs are allowable pending prior approval from the awarding agency. However, in accordance with 45 CFR Part 74 all pre award costs are incurred at the recipient's risk. The awarding office is under no obligation to reimburse such costs if for any reason the applicant does not receive an award or if the award to the recipient is less than anticipated.
- The available funds are inclusive of direct and appropriate indirect costs.
- Only one grant will be awarded per applicant.
- IHS will not acknowledge receipt of applications.

6. Electronic Submission Requirements

Use the *http://www.Grants.gov* Web site to submit an application electronically and select the "Apply for Grants" link on the homepage. Download a copy of the application package, complete it offline, and then upload and submit the application via the Grants.gov Web site. Electronic copies of the application may not be submitted as attachments to e-mail messages addressed to IHS employees or offices.

Applicants that receive a waiver to submit paper application documents must follow the rules and timelines that are noted below. The applicant must seek assistance at least ten days prior to the application deadline.

Applicants that do not adhere to the timelines for Central Contractor Registry (CCR) and/or Grants.gov registration and/or request timely assistance with technical issues will not be considered for a waiver to submit a paper application.

Please be aware of the following:

• Please search for the application package in Grants.gov by entering the CFDA number or the Funding Opportunity Number. Both numbers are located in the header of this announcement.

• Paper applications are not the preferred method for submitting applications. However, if you experience technical challenges while submitting your application electronically, please contact Grants.gov Support directly at: *http://www.Grants.gov/CustomerSupport* or (800) 518–4726. Customer Support is available to address questions 24 hours a day, 7 days a week (except on Federal holidays).

• Upon contacting Grants.gov, obtain a tracking number as proof of contact. The tracking number is helpful if there are technical issues that cannot be resolved and a waiver from the agency must be obtained.

• If it is determined that a waiver is needed, you must submit a request in writing (e-mails are acceptable) to *Paul.Gettys@ihs.gov* with a copy to *Tammy.Bagley@ihs.gov.* Please include a clear justification for the need to deviate from our standard electronic submission process.

• If the waiver is approved, the application should be sent directly to the DGO by the deadline date of July 21, 2010.

• Applicants are strongly encouraged not to wait until the deadline date to begin the application process through Grants.gov as the registration process for CCR and Grants.gov could take up to ten working days.

• Please use the optional attachment feature in Grants.gov to attach additional documentation that may be requested by the DGO.

• All applicants must comply with any page limitation requirements described in this Funding Announcement.

• After you electronically submit your application, you will receive an automatic acknowledgment from Grants.gov that contains a Grants.gov tracking number. The DGO will download your application from Grants.gov and provide necessary copies to the appropriate agency officials. Neither the DGO nor the Program Official will notify applicants that the application has been received.

E-mail applications will not be accepted under this announcement.

Dun and Bradstreet (D&B) Date Universal Numbering System (DUNS)

Applicants are required to have a DUNS number to apply for a grant or cooperative agreement from the Federal Government. The DUNS number is a unique nine-digit identification number provided by D&B, which uniquely identifies your entity. The DUNS number is site specific; therefore each distinct performance site may be assigned a DUNS number. Obtaining a DUNS number is easy and there is no charge. To obtain a DUNS number, you may access it through the following Web site *http://fedgov.dnb.com/webform* or to expedite the process call (866) 705–5711.

Another important fact is that applicants must also be registered with the CCR and a DUNS number is required before an applicant can complete their CCR registration. Registration with the CCR is free of charge. Applicants may register online at *http://www.ccr.gov.* Additional information regarding the DUNS, CCR, and Grants.gov processes can be found at: *http://www.Grants.gov.*

Registration with the CCR is free of charge. Applicants may register by calling 1 (866) 606–8220. Please review and complete the CCR Registration worksheet located at *http://www.ccr.gov.*

V. Application Review Information

Points will be assigned to each evaluation criteria adding up to a total of 100 points. A minimum score of 65 points is required for funding. Points are assigned as follows:

1. Evaluation Criteria

Project Narrative (30 Points)

a. Describe your legal status and organization.

b. State specific objectives of the project, and the extent to which they are measurable and quantifiable, significant to the needs of Indian people, logical, complete, and consistent with the purpose of Section 114.

c. Describe briefly what the project intends to accomplish. Identify the expected results, benefits, and outcomes or products to be derived from each objective of the project.

d. Provide a project specific work plan (milestone chart) which lists each objective, the tasks to be conducted in order to reach the objective, and the time frame needed to accomplish each task. Time frames should be projected in a realistic manner to assure that the scope of work can be completed within each budget period. (A work plan format is provided.)

e. In the case of proposed projects for identification of Indians with a potential for education or training in the health professions, include a method for assessing the potential of interested Indians for undertaking necessary education or training in such health professions.

f. State clearly the criteria by which the project's progress will be evaluated and by which the success of the project will be determined.

g. Explain the methodology that will be used to determine if the needs, goals, and objectives identified and discussed in the application are being met and if the results and benefits identified are being achieved.

h. Identify who will perform the evaluation and when.

Program Planning (20 Points)

a. Provide an organizational chart and describe the administrative, managerial and organizational arrangements and the facilities and resources to be utilized to conduct the proposed project (include in appendix).

b. Provide the name and qualifications of the project director or other individuals responsible for the conduct of the project; the qualifications of the principal staff carrying out the project; and a description of the manner in which the applicant's staff is or will be organized and supervised to carry out the proposed project. Include biographical sketches of key personnel (or job descriptions if the position is vacant) (include in appendix).

c. Describe any prior experience in administering similar projects.

d. Discuss the commitment of the organization, *i.e.,* although not required, the level of non-Federal support. List the intended financial participation, if any, of the applicant in the proposed project specifying the type of contributions such as cash or services, loans of full- or part-time staff, equipment, space, materials or facilities or other contributions.

e. Describe the ability to provide outreach and recruitment for health professions to Indian communities including elementary and secondary schools and community colleges located on Indian reservations which will be served by the program.

f. Describe the organization's plan to incorporate a program advisory board comprised of representatives from the Tribes and communities which will be served by the program.

g. To the maximum extent feasible, employ qualified Indians in the program.

Program Evaluation (20 Points)

a. Describe the current and proposed participation of Indians (if any) in your organization.

b. Identify the target Indian population to be served by your

proposed project and the relationship of your organization to that population.

c. Describe the methodology to be used to access the target population.

d. Identify existing university tutoring, counseling and student support services.

Progress Report (20 Points)

a. Provide data and supporting documentation to substantiate need for recruitment.

b. Indicate the number of potential Indian students to be contacted and recruited as well as potential cost per student recruited. Those projects that have the potential to serve a greater number of Indians will be given first consideration.

c. Describe methodology to locate and recruit students with educational potential in a variety of health care fields. Primary recruitment efforts must be in the field of medicine with secondary efforts in other allied health fields such as pharmacy, dentistry, medical technology, x-ray technology, *etc.* The field of nursing is excluded since the IHS does fund the IHS Nursing Recruitment grant program.

Program Budget (10 Points)

a. Clearly define the budget. Provide a justification and detailed breakdown of the funding by category for the first year of the project. Information on the project director and project staff should include salaries and percentage of time assigned to the grant. List equipment purchases necessary to conduct the project.

b. The available funding level of $170,000 is inclusive of both direct and indirect costs or 8 percent of total direct costs. Because this project is for a training grant, the Department of Health and Human Services' policy limiting reimbursement of indirect cost to the lesser of the applicant's actual indirect costs or 8 percent of total direct costs (exclusive of tuition and related fees and expenditures for equipment) is applicable. This limitation applies to all institutions of higher education.

c. The applicant may include as a direct cost student support costs related to tutoring, counseling, and support for students enrolled in a health career program of study at the respective college or university. Tuition and stipends for regular sessions are not allowable costs of the grant; however, students recruited through the INMED program may apply for funding from the IHS Scholarship Programs.

d. Projects requiring a second, third, and fourth year must include a program narrative and categorical budget and justification for each additional year of funding requested (this is not considered part of the 12-page narrative).

e. Provide budgetary information for summer preparatory programs for Indian students, who need enrichment in the subjects of math and science in order to pursue training in the health professions.

Multi-Year Project Requirements

1. Applications must include a narrative, budget, and budget justification for the second, third and fourth year of funding.

Appendix to include:

a. Resumes and position descriptions.

b. Organizational Chart.

c. Work Plan.

d. Tribal Resolution(s)/letters of support.

e. Position Descriptions for Key Staff.

2. Review and Selection Process

Each application will be prescreened by the DGO staff for eligibility and completeness as outlined in the funding announcement. Incomplete applications and applications that are non-responsive to the eligibility criteria will not be referred to the Objective Review Committee. Applicants will be notified by DGO, via letter, to outline the missing components of the application.

To obtain a minimum score for funding, applicants must address all program requirements and provide all required documentation. Applicants that receive less than a minimum score will be informed via e-mail of their application's deficiencies. A summary statement outlining the strengths and weaknesses of the application will be provided to these applicants. The summary statement will be sent to the Authorized Organizational Representative that is identified on the face page of the application.

VI. Award Administration Information

1. Award Notices

The Notice of Award (NoA) will be initiated by the DGO and will be mailed via postal mail to each entity that is approved for funding under this announcement. The NoA will be signed by the Grants Management Officer and this is the authorizing document for which funds are dispersed to the approved entities. The NoA will serve as the official notification of the grant award and will reflect the amount of Federal funds awarded, the purpose of the grant, the terms and conditions of the award, the effective date of the award, and the budget/project period. The NoA is the legally binding document and is signed by an authorized grants official within the IHS.

2. Administrative Requirements

Grants are administered in accordance with the following regulations, policies, and OMB cost principles:

A. The criteria as outlined in this Program Announcement.

B. Administrative Regulations for Grants:

- 45 CFR, Part 92, Uniform Administrative Requirements for Grants and Cooperative Agreements to State, Local and Tribal Governments.
- 45 CFR, Part 74, Uniform Administrative Requirements for Grants and Agreements with Institutions of Higher Education, Hospitals, and other Non-profit Organizations.

C. Grants Policy:

- HHS Grants Policy Statement, Revised 01/07.

D. Cost Principles:

- Title 2: Grant and Agreements, Part 225—Cost Principles for State, Local, and Indian Tribal Governments (OMB A–87).Title 2: Grant and Agreements, Part 230—Cost Principles for Non-Profit Organizations (OMB Circular A–122).

E. Audit Requirements:

- OMB Circular A–133, Audits of States, Local Governments, and Non-profit Organizations.

3. Indirect Costs

This section applies to all grant recipients that request reimbursement of indirect costs in their grant application. In accordance with HHS Grants Policy Statement, Part II–27, IHS requires applicants to obtain a current indirect cost rate agreement prior to award. The rate agreement must be prepared in accordance with the applicable cost principles and guidance as provided by the cognizant agency or office. A current rate covers the applicable grant activities under the current award's budget period. If the current rate is not on file with the DGO at the time of award, the indirect cost portion of the budget will be restricted. The restrictions remain in place until the current rate is provided to the DGO.

Generally, indirect costs rates for IHS grantees are negotiated with the Division of Cost Allocation *http://rates.psc.gov/* and the Department of Interior (National Business Center) *http://www.aqd.nbc.gov/services/ICS.aspx.* If your organization has questions regarding the indirect cost policy, please call (301) 443–5204 to request assistance.

4. Reporting Requirements

Failure to submit required reports within the time allowed may result in

suspension or termination of an active grant, withholding of additional awards for the project, or other enforcement actions such as withholding of payments or converting to the reimbursement method of payment. Continued failure to submit required reports may result in one or both of the following: (1) The imposition of special award provisions; and (2) the non-funding or non-award of other eligible projects or activities. This requirement applies whether the delinquency is attributable to the failure of the grantee organization or the individual responsible for preparation of the reports.

The reporting requirements for this program are noted below.

A. *Progress Report.* Program progress reports are required annually. These reports will include a brief comparison of actual accomplishments to the goals established for the period, or, if applicable, provide sound justification for the lack of progress, and other pertinent information as required. A final report must be submitted within 90 days of expiration of the budget/project period.

B. *Financial Status Report.* Annual Financial Status Reports (FSR) reports must be submitted within 90 days after the budget period ends.

Final FSRs are due within 90 days of expiration of the project period. Standard Form 269 (long form for those reporting on program income; short form for all others) will be used for financial reporting.

Federal Cash Transaction Reports are due every calendar quarter to the Division of Payment Management, Payment Management Branch, Department of Health and Human Services at: *http://www.dpm.gov.* Failure to submit timely reports may cause a disruption in timely payments to your organization.

Grantees are responsible and accountable for accurate reporting of the Progress Reports and Financial Status Reports which are generally due annually. Financial Status Reports (SF–269) are due 90 days after each budget period and the final SF–269 must be verified from the grantee records on how the value was derived.

5. Telecommunication for the hearing impaired is available at: TTY 301–443–6394

VII. Agency Contacts

For grant application and business management information, contact Mr. Roscoe Brunson, Division of Grants Operations, Indian Health Service, 801 Thompson Avenue, Suite 360, Rockville, Maryland 20852, (301) 443–5204.

For program information, contact Ms. Jackie Santiago, Office of Public Health Support, Division of Health Professions Support, 801 Thompson Avenue, Suite 120, Rockville, Maryland 20852, (301) 443–3396.

Dated: June 10, 2010.

Randy Grinnell,

Deputy Director, Indian Health Service.

[FR Doc. 2010–14880 Filed 6–18–10; 8:45 am]

BILLING CODE 4165–16–P

DEPARTMENT OF HEALTH AND HUMAN SERVICES

National Institutes of Health

National Center for Complementary & Alternative Medicine; Notice of Closed Meeting

Pursuant to section 10(d) of the Federal Advisory Committee Act, as amended (5 U.S.C. App.), notice is hereby given of the following meeting.

The meeting will be closed to the public in accordance with the provisions set forth in sections 552b(c)(4) and 552b(c)(6), Title 5 U.S.C., as amended. The grant applications and the discussions could disclose confidential trade secrets or commercial property such as patentable material, and personal information concerning individuals associated with the grant applications, the disclosure of which would constitute a clearly unwarranted invasion of personal privacy.

Name of Committee: National Center for Complementary and Alternative Medicine Special Emphasis Panel; PCCTR (U 19).

Date: July 15–16, 2010.

Time: 5 p.m. to 5 p.m.

Agenda: To review and evaluate grant applications.

Place: Courtyard by Marriott Washingtonian Center, 204 Boardwalk Place, Gaithersburg, MD 20814.

Contact Person: Martina Schmidt, PhD, Scientific Review Officer, Office of Scientific Review, National Center for Complementary, & Alternative Medicine, NIH, 6707 Democracy Blvd., Suite 401, Bethesda, MD 20892, 301–594–3456, *schmidma@mail.nih.gov.*

(Catalogue of Federal Domestic Assistance Program Nos. 93.213, Research and Training in Complementary and Alternative Medicine, National Institutes of Health, HHS)

Dated: June 14, 2010.

Jennifer Spaeth,

Director, Office of Federal Advisory Committee Policy.

[FR Doc. 2010–14961 Filed 6–18–10; 8:45 am]

BILLING CODE 4140–01–P

DEPARTMENT OF HEALTH AND HUMAN SERVICES

National Institutes of Health

National Institute of General Medical Sciences; Notice of Closed Meeting

Pursuant to section 10(d) of the Federal Advisory Committee Act, as amended (5 U.S.C. App.), notice is hereby given of the following meeting.

The meeting will be closed to the public in accordance with the provisions set forth in sections 552b(c)(4) and 552b(c)(6), Title 5 U.S.C., as amended. The grant applications and the discussions could disclose confidential trade secrets or commercial property such as patentable material, and personal information concerning individuals associated with the grant applications, the disclosure of which would constitute a clearly unwarranted invasion of personal privacy.

Name of Committee: National Institute of General Medical Sciences Initial Review Group, Minority Programs Review Subcommittee B.

Date: July 15–16, 2010.

Time: 8:30 a.m. to 5 p.m.

Agenda: To review and evaluate grant applications.

Place: Hyatt Regency Bethesda, One Bethesda Metro Center, Bethesda, MD 20814.

Contact Person: Rebecca H. Johnson, PhD, Scientific Review Officer, Office of Scientific Review, National Institute of General Medical Sciences, National Institutes of Health, Natcher Building, Room 3AN18C, Bethesda, MD 20892. 301–594–2771. *johnsonrh@nigms.nih.gov.*

(Catalogue of Federal Domestic Assistance Program Nos. 93.375, Minority Biomedical Research Support; 93.821, Cell Biology and Biophysics Research; 93.859, Pharmacology, Physiology, and Biological Chemistry Research; 93.862, Genetics and Developmental Biology Research; 93.88, Minority Access to Research Careers; 93.96, Special Minority Initiatives, National Institutes of Health, HHS)

Dated: June 15, 2010.

Anna Snouffer,

Acting Director, Office of Federal Advisory Committee Policy.

[FR Doc. 2010–14963 Filed 6–18–10; 8:45 am]

BILLING CODE 4140–01–P

DEPARTMENT OF HEALTH AND HUMAN SERVICES

National Institutes of Health

Center for Scientific Review; Notice of Closed Meetings

Pursuant to section 10(d) of the Federal Advisory Committee Act, as amended (5 U.S.C. App.), notice is hereby given of the following meetings.

The meetings will be closed to the public in accordance with the provisions set forth in sections 552b(c)(4) and 552b(c)(6), Title 5 U.S.C., as amended. The grant applications and the discussions could disclose confidential trade secrets or commercial property such as patentable material, and personal information concerning individuals associated with the grant applications, the disclosure of which would constitute a clearly unwarranted invasion of personal privacy.

Name of Committee: Center for Scientific Review Special Emphasis Panel, OD–10–005: Directors' Opportunity 5 Themes—Hematology and Cardiovascular-Respiratory Sciences.

Date: June 28, 2010.

Time: 8 a.m. to 5 p.m.

Agenda: To review and evaluate grant applications.

Place: The Fairmont Washington, DC, 2401 M Street, NW., Washington, DC 20037.

Contact Person: Ai-Ping Zou, MD, PhD, Scientific Review Officer, Center for Scientific Review, National Institutes of Health, 6701 Rockledge Drive, Room 4118, MSC 7814, Bethesda, MD 20892. 301–435–1777. *zouai@csr.nih.gov.*

This notice is being published less than 15 days prior to the meeting due to the timing limitations imposed by the review and funding cycle.

Name of Committee: Center for Scientific Review Special Emphasis Panel, Aging and Developmental.

Date: June 28, 2010.

Time: 11 a.m. to 1:30 p.m.

Agenda: To review and evaluate grant applications.

Place: National Institutes of Health, 6701 Rockledge Drive, Bethesda, MD 20892. (Telephone Conference Call.)

Contact Person: James Harwood, PhD, Scientific Review Officer, Center for Scientific Review, National Institutes of Health, 6701 Rockledge Drive, Room 5168, MSC 7840, Bethesda, MD 20892. 301–435–1256. *harwoodj@csr.nih.gov.*

This notice is being published less than 15 days prior to the meeting due to the timing limitations imposed by the review and funding cycle.

Name of Committee: Center for Scientific Review Special Emphasis Panel, RFA Panel: Advancing Regulatory Science through Novel Research and Science-Based Technologies.

Date: July 13–14, 2010.

Time: 8 a.m. to 5 p.m.

Agenda: To review and evaluate grant applications.

Place: Melrose Hotel, 2430 Pennsylvania Avenue, NW., Washington, DC 20037.

Contact Person: Joseph G. Rudolph, PhD, Chief and Scientific Review Officer, Center for Scientific Review, National Institutes of Health, 6701 Rockledge Drive, Room 5186, MSC 7844, Bethesda, MD 20892. 301–408–9098. *josephru@csr.nih.gov.*

Name of Committee: Center for Scientific Review Special Emphasis Panel, MOSS Member SEP.

Date: July 14–15, 2010.

Time: 11 a.m. to 8 p.m.

Agenda: To review and evaluate grant applications.

Place: National Institutes of Health, 6701 Rockledge Drive, Bethesda, MD 20892. (Virtual Meeting.)

Contact Person: Anshumali Chaudhari, PhD, Scientific Review Officer, Center for Scientific Review, National Institutes of Health, 6701 Rockledge Drive, Room 4124, MSC 7802, Bethesda, MD 20892. (301) 435–1210. *chaudhaa@csr.nih.gov.*

Name of Committee: Center for Scientific Review Special Emphasis Panel, RFA Panel: Large Scale Production of Perturbagen-Induced Cellular Signatures.

Date: July 16, 2010.

Time: 8 a.m. to 5 p.m.

Agenda: To review and evaluate grant applications.

Place: St. Gregory Hotel, 2033 M Street, NW., Washington, DC 20036.

Contact Person: Elena Smirnova, PhD, Scientific Review Officer, Center for Scientific Review, National Institutes of Health, 6701 Rockledge Drive, Room 5187, MSC 7840, Bethesda, MD 20892. 301–435–1236. *smirnove@csr.nih.gov.*

(Catalogue of Federal Domestic Assistance Program Nos. 93.306, Comparative Medicine; 93.333, Clinical Research, 93.306, 93.333, 93.337, 93.393–93.396, 93.837–93.844, 93.846–93.878, 93.892, 93.893, National Institutes of Health, HHS)

Dated: June 15, 2010.

Anna Snouffer,

Deputy Director, Office of Federal Advisory Committee Policy.

[FR Doc. 2010–14972 Filed 6–18–10; 8:45 am]

BILLING CODE 4140–01–P

DEPARTMENT OF HEALTH AND HUMAN SERVICES

National Institutes of Health

Division of Program Coordination, Planning, and Strategic Initiatives, Office of the Director, National Institutes of Health; Notice of Meeting

Pursuant to section 10(a) of the Federal Advisory Committee Act, as amended (5 U.S.C. App.), notice is hereby given of a conference call meeting of the Council of Councils.

The meeting will be open to the public through teleconference at the number listed below.

Name of Committee: Council of Councils.

Date: July 1, 2010.

Time: 3 p.m. to 6:15 p.m.

Agenda: Among the topics proposed for discussion are concept review of the following proposed FY 2011 Common Fund initiatives: (1) NIH–HMO Research Network Collaboratory; (2) Health Economics Research for Health Care Reform; (3) NIH Director's Independent Fellows Program; and (4) Research in Support of the Workforce.

Toll-free dial-in number (U.S. and Canada): 866–695–1528. Conference code: 7626802625.

Place: National Institutes of Health, Building 1, Room 260, 1 Center Drive, Bethesda, MD 20892, (Telephone Conference Call)

Contact Person: Robin Kawazoe, Executive Secretary, Council of Councils and Deputy Director, Division of Program Coordination, Planning, and Strategic Initiatives, Office of the Director, National Institutes of Health, Building 1, Room 260, 1 Center Drive, Bethesda, MD 20892, *kawazoer@mail.nih.gov,* (301) 402–9852.

This meeting is being published less than 15 days prior to the meeting due to scheduling conflicts of Members.

Information is also available on the Council of Council's home page: *http://dpcpsi.nih.gov/council/,* where an agenda and proposals to be discussed will be posted before the meeting date.

Any interested person may file written comments with the committee by forwarding the statement to the Contact Person listed on this notice. The statement should include the name, address, telephone number and when applicable, the business or professional affiliation of the interested person.

Dated: June 15, 2010.

Anna P. Snouffer,

Deputy Director, Office of Federal Advisory Committee Policy.

[FR Doc. 2010–14973 Filed 6–18–10; 8:45 am]

BILLING CODE 4140–01–P

DEPARTMENT OF HEALTH AND HUMAN SERVICES

National Institutes of Health

National Institute of Environmental Health Sciences; Notice of Closed Meetings

Pursuant to section 10(d) of the Federal Advisory Committee Act, as amended (5 U.S.C. App.), notice is hereby given of the following meetings.

The meetings will be closed to the public in accordance with the provisions set forth in sections 552b(c)(4) and 552b(c)(6), Title 5 U.S.C., as amended. The grant applications and the discussions could disclose confidential trade secrets or commercial property such as patentable material, and personal information concerning individuals associated with the grant applications, the disclosure of which would constitute a clearly unwarranted invasion of personal privacy.

Name of Committee: National Institute of Environmental Health Sciences Special Emphasis Panel, Pediatric Lung Function Study.

Date: July 1, 2010.

Time: 1 p.m. to 3 p.m.

Agenda: To review and evaluate grant applications.

Place: Keystone Building, 530 Davis Drive, 2118, Durham, NC 27709. (Telephone Conference Call.)

Contact Person: Leroy Worth, PhD, Scientific Review Officer, Scientific Review Branch, Division of Extramural Research and Training, Nat. Institute of Environmental Health Sciences, P.O. Box 12233, MD EC–30/Room 3171, Research Triangle Park, NC 27709. (919) 541–0670. worth@niehs.nih.gov.

Name of Committee: National Institute of Environmental Health Sciences Special Emphasis Panel, Review of Carcinogen Report.

Date: July 22, 2010.

Time: 1:30 p.m. to 4:40 p.m.

Agenda: To review and evaluate contract proposals.

Place: NIEHS/National Institutes of Health, Building 4401, East Campus, 79 T.W. Alexander Drive, Research Triangle Park, NC 27709. (Telephone Conference Call.)

Contact Person: Janice B. Allen, PhD, Scientific Review Administrator, Scientific Review Branch, Division of Extramural Research and Training, Nat. Institute of Environmental Health Science, P.O. Box 12233, MD EC–30/Room 3170 B, Research Triangle Park, NC 27709. (919) 541–7556.

(Catalogue of Federal Domestic Assistance Program Nos. 93.115, Biometry and Risk Estimation—Health Risks from Environmental Exposures; 93.142, NIEHS Hazardous Waste Worker Health and Safety Training; 93.143, NIEHS Superfund Hazardous Substances—Basic Research and Education; 93.894, Resources and Manpower Development in the Environmental Health Sciences; 93.113, Biological Response to Environmental Health Hazards; 93.114, Applied Toxicological Research and Testing, National Institutes of Health, HHS)

Dated: June 14, 2010.

Jennifer Spaeth,

Director, Office of Federal Advisory Committee Policy.

[FR Doc. 2010–14985 Filed 6–18–10; 8:45 am]

BILLING CODE 4140–01–P

DEPARTMENT OF HEALTH AND HUMAN SERVICES

National Institutes of Health

National Institute of General Medical Sciences; Notice of Closed Meeting

Pursuant to section 10(d) of the Federal Advisory Committee Act, as amended (5 U.S.C. App.), notice is hereby given of the following meeting.

The meeting will be closed to the public in accordance with the provisions set forth in sections 552b(c)(4) and 552b(c)(6), Title 5 U.S.C., as amended. The grant applications and the discussions could disclose confidential trade secrets or commercial property such as patentable material, and personal information concerning individuals associated with the grant applications, the disclosure of which would constitute a clearly unwarranted invasion of personal privacy.

Name of Committee: National Institute of General Medical Sciences Special Emphasis Panel Biomedical Research and Research Training Review Subcommittee Meeting, BRT–5 (PD).

Date: July 16, 2010.

Time: 8 a.m. to 5 p.m.

Agenda: To review and evaluate grant applications.

Place: Hyatt Regency—Bethesda, One Bethesda Metro Center, Bethesda, MD 20814.

Contact Person: Brian R. Pike, PhD, Scientific Review Officer, Office of Scientific Review, National Institute of General Medical Sciences, National Institutes of Health, 45 Center Drive, Room 3AN18, Bethesda, MD 20892, (301) 594–3907, *pikbr@mail.nih.gov*.

(Catalogue of Federal Domestic Assistance Program Nos. 93.375, Minority Biomedical Research Support; 93.821, Cell Biology and Biophysics Research; 93.859, Pharmacology, Physiology, and Biological Chemistry Research; 93.862, Genetics and Developmental Biology Research; 93.88, Minority Access to Research Careers; 93.96, Special Minority Initiatives, National Institutes of Health, HHS)

Dated: June 15, 2010.

Anna Snouffer,

Acting Director, Office of Federal Advisory Committee Policy.

[FR Doc. 2010–14970 Filed 6–18–10; 8:45 am]

BILLING CODE 4140–01–P

DEPARTMENT OF HEALTH AND HUMAN SERVICES

National Institutes of Health

Eunice Kennedy Shriver National Institute of Child Health and Human Development; Notice of Closed Meeting

Pursuant to section 10(d) of the Federal Advisory Committee Act, as amended (5 U.S.C. App.), notice is hereby given of the following meeting.

The meeting will be closed to the public in accordance with the provisions set forth in sections 552b(c)(4) and 552b(c)(6), Title 5 U.S.C., as amended. The grant applications and the discussions could disclose confidential trade secrets or commercial property such as patentable material, and personal information concerning individuals associated with the grant applications, the disclosure of which would constitute a clearly unwarranted invasion of personal privacy.

Name of Committee: National Institute of Child Health and Human Development Initial Review Group Health, Behavior, and Context Subcommittee.

Date: June 24–25, 2010.

Time: 8 a.m. to 5 p.m.

Agenda: To review and evaluate grant applications.

Place: Embassy Suites at the Chevy Chase Pavilion, 4300 Military Road, NW., Washington, DC 20015.

Contact Person: Michele C. Hindi-Alexander, PhD, Division of Scientific Review, National Institutes of Health, Eunice Kennedy Shriver National Institute of Child Health and Human Development, 6100 Executive Blvd., Room 5B01, Bethesda, MD 20812–7510, 301–435–8382, *hindialm@mail.nih.gov*.

This notice is being published less than 15 days prior to the meeting due to the timing limitations imposed by the review and funding cycle.

(Catalogue of Federal Domestic Assistance Program Nos. 93.864, Population Research; 93.865, Research for Mothers and Children; 93.929, Center for Medical Rehabilitation Research; 93.209, Contraception and Infertility Loan Repayment Program, National Institutes of Health, HHS)

Dated: June 15, 2010.

Jennifer Spaeth,

Director, Office of Federal Advisory Committee Policy.

[FR Doc. 2010–14962 Filed 6–18–10; 8:45 am]

BILLING CODE 4140–01–P

DEPARTMENT OF HEALTH AND HUMAN SERVICES

National Institutes of Health

Eunice Kennedy Shriver National Institute of Child Health and Human Development; Notice of Closed Meeting

Pursuant to section 10(d) of the Federal Advisory Committee Act, as amended (5 U.S.C. App.), notice is hereby given of the following meeting.

The meeting will be closed to the public in accordance with the provisions set forth in sections 552b(c)(4) and 552b(c)(6), Title 5 U.S.C., as amended. The grant applications and the discussions could disclose confidential trade secrets or commercial property such as patentable material, and personal information concerning individuals associated with the grant applications, the disclosure of which would constitute a clearly unwarranted invasion of personal privacy.

Name of Committee: National Institute of Child Health and Human Development Special Emphasis Panel; Meiotic Maturation Process.

Date: June 24, 2010.

Time: 3 p.m. to 4 p.m.

Agenda: To review and evaluate grant applications.

Place: National Institutes of Health, 6100 Executive Boulevard, Rockville, MD 20852 (Telephone Conference Call).

Contact Person: Neelakanta Ravindranath, PhD, Scientific Review Officer, Division of Scientific Review, Eunice Kennedy Shriver National Institute of Child Health and

Human Development, 6100 Executive Blvd., Room 5B01G, Bethesda, MD 20892–7510, 301–435–6889, *ravindrn@mail.nih.gov*.

This notice is being published less than 15 days prior to the meeting due to the timing limitations imposed by the review and funding cycle.

(Catalogue of Federal Domestic Assistance Program Nos. 93.864, Population Research; 93.865, Research for Mothers and Children; 93.929, Center for Medical Rehabilitation Research; 93.209, Contraception and Infertility Loan Repayment Program, National Institutes of Health, HHS)

Dated: June 15, 2010.

Jennifer Spaeth,

Director, Office of Federal Advisory Committee Policy.

[FR Doc. 2010–14960 Filed 6–18–10; 8:45 am]

BILLING CODE 4140–01–P

DEPARTMENT OF THE INTERIOR

National Park Service

Notice of Acceptance of Concurrent Legislative Jurisdiction in Kansas

AGENCY: National Park Service, Department of the Interior.

ACTION: Notice of Acceptance of Concurrent Legislative Jurisdiction in Kansas.

SUMMARY: Notice is hereby given of jurisdictional changes over areas administered by the National Park Service in the State of Kansas. The State of Kansas has ceded concurrent legislative jurisdiction over lands and waters owned, leased or administratively controlled by the National Park Service at the following units in the State of Kansas:

Fort Larned National Historic Site;
Fort Scott National Historic Site;
Brown v. *Board of Education* National Historic Site;
Nicodemus National Historic Site;
Tallgrass Prairie National Preserve.

This action will allow for more efficient conduct of both State and Federal functions and will comply with the congressional mandate that insofar as practicable the United States shall exercise concurrent legislative jurisdiction within units of the National Park System.

DATES: Concurrent legislative jurisdiction was ceded to the United States, upon acceptance by the Federal Government, by the Legislature of Kansas, Senate Bill No. 356 which was signed into law on March 23, 2007, and became effective on July 1, 2007, and is codified as Kansas Statute 27–120. National Park Service Director Mary A. Bomar accepted cession of concurrent legislative jurisdiction from the State of Kansas on January 16, 2008. The Honorable Kathleen Sebelius, Governor of Kansas, acknowledged the acceptance of concurrent legislative jurisdiction by the National Park Service on January 23, 2008.

FOR FURTHER INFORMATION CONTACT: *General Information:* James Loach, Associate Regional Director, Park Operations and Education, Midwest Region, National Park Service, Omaha, Nebraska 68102. Telephone 402–661–1702.

Technical Information: Jackie Henman, Regional Law Enforcement Specialist, Midwest Region, National Park Service, Omaha, Nebraska 68102. Telephone 402–661–1884.

SUPPLEMENTARY INFORMATION: The acquisition of concurrent legislative jurisdiction by the United States will assist in the enforcement of state criminal laws by the United States under 18 U.S.C. 13, the Assimilative Crimes Act. The acceptance of cession of jurisdiction by the Director of the National Park Service, U.S. Department of the Interior, was pursuant to authority conferred by 40 U.S.C. 3112(b) and Public Law 107–217, 116 Stat. 1144.

Dated: March 31, 2010.

Ernest Quintana,

Regional Director, Midwest Region.

[FR Doc. 2010–14836 Filed 6–18–10; 8:45 am]

BILLING CODE 4312–BF–P

DEPARTMENT OF THE INTERIOR

Bureau of Land Management

[LLWO260000 L10600000 XQ0000]

Notice of Call for Nominations for the Wild Horse and Burro Advisory Board

AGENCY: Bureau of Land Management, Interior.

ACTION: Notice.

SUMMARY: The purpose of this notice is to solicit public nominations for three members to the Wild Horse and Burro Advisory Board (Board). The Board provides advice concerning the management, protection, and control of wild free-roaming horses and burros on the public lands administered by the Department of the Interior, through the Bureau of Land Management (BLM) and the Department of Agriculture, through the Forest Service. The BLM is changing the makeup of the Board by replacing one of the two livestock positions with an additional public interest position.

DATES: Nominations should be submitted to the address listed below no later than August 5, 2010.

ADDRESSES: National Wild Horse and Burro Program, Bureau of Land Management, L Street Mailing, 1849 C Street, NW., Washington, DC 20240, Attn: Sharon Kipping. Or you may send a fax to Ms. Kipping at 202–912–7182, or e-mail her at *Sharon_Kipping@blm.gov.* If you have questions, please call Ms. Kipping at (202) 912–7263.

FOR FURTHER INFORMATION CONTACT: Don Glenn, Division Chief, Wild Horse and Burro Program, (202) 912–7297. Individuals who use a telecommunications device for the deaf (TDD) may contact Ramona Delorme at any time by calling the Federal Information Relay Service at 1–800–877–8339.

SUPPLEMENTARY INFORMATION: Nominations for a term of three years are needed to represent the following categories of interest:

Natural Resource Management;
Wild Horse and Burro Research;
Public Interest (with special knowledge of equine behavior).

Individuals may nominate themselves or others. Any individual or organization may nominate one or more persons to serve on the Board. The following information must accompany all nominations for the individual to be considered for a position.

Nominations will not be accepted without a complete resume of the nominee, including the following:

1. Which positions the nominee should be considered for.
2. Nominee's Full Name.
3. Business Address and Phone (include e-mail address if applicable).
4. Home Address and Phone (include e-mail address if applicable).
5. Present Occupation/Title.
6. Education (colleges, degrees, major field of study).
7. Career Highlights: Significant related experience, civic and professional activities, elected offices (including prior advisory committee experience or career achievements related to the interest to be represented). Attach additional pages, as necessary.
8. Qualifications: Education, training, and experience that qualify the nominee to serve on the Board.
9. Experience or knowledge of wild horse and burro management and the issues facing the BLM.
10. Experience or knowledge of horses or burros (equine health, training and management).
11. Experience in working with disparate groups to achieve collaborative solutions (e.g, civic organizations, planning commissions, school boards).

12. Any BLM permits, leases, or licenses that the nominee holds (or state Not Applicable).

Attach or have letters of references sent from special interests or organizations. Also include, if applicable, letters of endorsement from business associates, friends, co-workers, local, State, and/or Federal Government, or members of Congress along with any other information that speaks to the nominee's qualifications.

Simultaneous with this notice, the BLM State offices will issue press releases providing information for submitting nominations.

As appropriate, certain Board members may be appointed as Special Government Employees. Special Government Employees serve on the board without compensation, and are subject to financial disclosure requirements in the Ethics in Government Act and 5 CFR part 2634. Nominations are to be sent to the address listed in the **ADDRESSES** section above.

Each nominee will be considered for selection according to his or her ability to represent his or her designated constituency, analyze and interpret data and information, evaluate programs, identify problems, work collaboratively in seeking solutions and formulate and recommend corrective actions. Individuals who are currently Federal or State employees, or federally registered lobbyists are not eligible to serve on the Board.

The Board will meet no less than two times annually. The BLM Director may call additional meetings in connection with special needs for advice.

Bud Cribley,

Deputy Assistant Director, Renewable Resources and Planning.

[FR Doc. 2010–14924 Filed 6–18–10; 8:45 am]

BILLING CODE 4310–84–P

DEPARTMENT OF THE INTERIOR

Bureau of Land Management

[CACA 49537, LLCAD08000, L51030000.FX0000, LVRAB109AA02]

Notice of Correction to Notice of Availability of the Draft Environmental Impact Statement/Staff Assessment to the California Desert Conservation Area Plan for the Calico Solar (Formerly SES Solar One) Project, San Bernardino County, CA

AGENCY: Bureau of Land Management, Interior.

ACTION: Notice of Correction.

SUMMARY: The Bureau of Land Management published a Notice of Availability of the Draft Environmental Impact Statement (EIS)/Staff Assessment (SA) and Possible Amendment to the California Desert Conservation Area Plan for the Calico Solar Project, San Bernardino County, California in the **Federal Register** on April 19, 2010 (75 FR 20376). Today's **Federal Register** notice provides information inadvertently omitted on how the public can submit comments.

ADDRESSES: Written comments pertaining to the Draft EIS/SA Calico Solar Project may be submitted by any of the following methods:

- *E-mail: cacalicospp@blm.gov*
- *Fax:* (760) 252–6098
- *Mail:* BLM Barstow Field Office, *Attn:* Calico Solar, 2601 Barstow Road, Barstow, California 92311.

Copies of the Calico Solar Draft EIS/SA are available at the above address. The document may also be viewed at public libraries in San Bernardino County, Sacramento, Fresno, San Francisco, Los Angeles, Eureka, and San Diego.

FOR FURTHER INFORMATION CONTACT: Jim Stobaugh, BLM Project Manager, by mail: P.O. Box 12000, Reno, Nevada 89520; phone (775) 861–6478; or e-mail *Jim_Stobaugh@blm.gov.*

Before including your address, phone number, e-mail address, or other personal identifying information in your comment, you should be aware that your entire comment—including your personal identifying information—may be made publicly available at any time. While you can ask us in your comment to withhold your personal identifying information from public review, we cannot guarantee that we will be able to do so.

Authority: 40 CFR 1506.6, 40 CFR 1506.10, 43 CFR 1610.2.

Thomas Pogacnik,

Deputy State Director, Natural Resources.

[FR Doc. 2010–14927 Filed 6–18–10; 8:45 am]

BILLING CODE 4310–40–P

DEPARTMENT OF THE INTERIOR

Bureau of Land Management

[LLNVE00000 L51100000.GN0000 LVEMF1000580 241A; 10–08807; MO#4500012658; TAS: 14X1109]

Notice of Intent To Prepare an Environmental Impact Statement for the Proposed Arturo Mine Project, Elko County, NV

AGENCY: Bureau of Land Management, Interior.

ACTION: Notice of intent.

SUMMARY: In compliance with the National Environmental Policy Act of 1969, as amended, (NEPA) and the Federal Land Policy and Management Act of 1976, as amended, the Bureau of Land Management (BLM) Tuscarora Field Office, Elko, Nevada intends to prepare an Environmental Impact Statement (EIS) for the proposed Arturo Mine Project (Project) and by this notice is announcing the beginning of the scoping process to solicit public comments and identify issues.

DATES: This notice initiates the public scoping process for the EIS. Comments on issues may be submitted in writing until July 21, 2010. The date(s) and location(s) of any scoping meetings will be announced at least 15 days in advance through local media, newspapers and the following BLM Web site: *http://www.blm.gov/nv/st/en/fo/elko_field_office.html.* In order to be included in the Draft EIS, all comments must be received prior to the close of the scoping period or 15 days after the last public meeting, whichever is later. We will provide additional opportunities for public participation upon publication of the Draft EIS.

ADDRESSES: You may submit comments related to the Arturo Mine Project by any of the following methods:

- *Web site: http://www.blm.gov/nv/st/en/fo/elko_field_office.html*
- *E-mail: arturo_eis@blm.gov*
- *Fax:* (775) 753–0255.
- *Mail:* BLM Tuscarora Field Office, Attn. John Daniel, 3900 Idaho Street, Elko, Nevada 89801.

Documents pertinent to this proposal may be examined at the Tuscarora Field Office.

FOR FURTHER INFORMATION CONTACT: For further information and/or to have your name added to our mailing list, contact John Daniel, Project Lead, *telephone:* (775) 753–0277; *address:* 3900 Idaho St, Elko, Nevada 89801; *E-mail: arturo_eis@blm.gov.*

SUPPLEMENTARY INFORMATION: Barrick Gold Exploration, Inc. (Barrick) proposes to develop and expand the Dee Gold Mine, which is an existing open pit gold mine currently in a closure and reclamation status. Included in the proposal is the expansion of the existing open pit, construction of two new waste rock disposal storage facilities, construction of a new heap leach facility, construction of new support facilities (office, substation and associated power transmission lines, water wells, water distribution and sewer systems, landfill, mined material stockpile, communications site,

stormwater control features, haul roads, and an access road), and continued surface exploration. Mill grade mined material will be processed at Barrick's Betze Mine Project located 8 miles south-southeast of the Project. Mined material will be transported using highway approved haul trucks. Dewatering is not proposed for this project. The Project would create approximately 2,347 acres of surface disturbance on public lands administered by the BLM. The project life is approximately 11 years. The Project is located approximately 45 miles northwest of Elko, Nevada in Elko County.

The purpose of the public scoping process is to determine relevant issues that will influence the scope of the environmental analysis, including alternatives, and guide the process for developing the EIS. The Draft EIS will address impacts to transportation, public safety, cultural resources, recreational opportunities, wildlife, threatened and endangered species, visual resources, air quality, wilderness characteristics, and other relevant issues. At present, the BLM has identified the following preliminary issues: grazing, wildlife, Native American concerns, cultural resources, and water resources.

The BLM will use and coordinate the NEPA comment process to satisfy the requirements for public involvement under Section 106 of the National Historic Preservation Act (16 U.S.C. 470(f)) as provided for in 36 CFR 800.2(d)(3). Native American Tribal consultations will be conducted in accordance with policy, and tribal concerns will be given due consideration, including impacts on Indian trust assets. Federal, state, and local agencies, along with other stakeholders that may be interested or affected by the BLM's decision on this project are invited to participate in the scoping process and, if eligible, may request or be requested by the BLM to participate as a cooperating agency. Before including your address, phone number, e-mail address, or other personal identifying information in your comment, you should be aware that your entire comment—including your personal identifying information—may be made publicly available at any time. While you can ask us in your comment to withhold your personal identifying information from public review, we cannot guarantee that we will be able to do so.

Authority: 40 CFR 1501.7.

Kenneth E. Miller,

Manager, Elko District Office.

[FR Doc. 2010–14931 Filed 6–18–10; 8:45 am]

BILLING CODE 4310–HC–P

DEPARTMENT OF THE INTERIOR

Fish and Wildlife Service

[FWS–R4–R–2009–N165; 40136–1265–0000–S3]

Tampa Bay Refuges, FL

AGENCY: Fish and Wildlife Service, Interior.

ACTION: Notice of availability: final comprehensive conservation plan and finding of no significant impact.

SUMMARY: We, the U.S. Fish and Wildlife Service (Service), announce the availability of our final comprehensive conservation plan (CCP) and finding of no significant impact (FONSI) for the environmental assessment for Egmont Key, Pinellas, and Passage Key National Wildlife Refuges. These three refuges, known as the Tampa Bay Refuges, are managed as part of the Chassahowitzka National Wildlife Refuge (NWR) Complex. In the final CCP, we describe how we will manage these refuges for the next 15 years.

ADDRESSES: You may obtain a copy of the CCP by writing to: Mr. Michael Lusk, Refuge Manager, 1502 S.E. Kings Bay Drive, Crystal River, FL 34429. You may also access and download the document from the Service's *Web site: http://southeast.fws.gov/planning.*

FOR FURTHER INFORMATION CONTACT: Mr. Michael Lusk; *telephone:* 727/570–5417; *e-mail: michael_lusk@fws.gov.*

SUPPLEMENTARY INFORMATION:

Introduction

With this notice, we finalize the CCP process for the Tampa Bay Refuges. We started this process through a notice in the **Federal Register** on December 3, 2004 (69 FR 70276). For more about the process, please see that notice.

Egmont Key NWR includes 392 acres and was established in 1974 to protect the Key's significant natural, historical, and cultural resources from the impending threats of development. Of the three Tampa Bay Refuges, it is the only refuge island open to the public and has been traditionally visited for many years as a primary recreation destination. Egmont Key NWR seeks to provide nesting habitat for brown pelicans and other waterbirds, as well as to conserve and protect barrier island habitat and to preserve historical structures of national significance (*i.e.,* historic lighthouse, guardhouse, gun batteries, and brick roads). Presently, the island's approximately 244 acres of beach and coastal berm support more than 110 species of nesting, migrating, and wintering birds. The island is designated as critical habitat for endangered piping plovers and provides habitat and protection for endangered manatees and sea turtles. Egmont Key NWR has an unusually high population of gopher tortoises and box turtles. Two wildlife sanctuaries, one on the east side of the island and one at the south end of the island, comprise about 97 acres and are closed to public use. Cooperative management agreements between the Service, the U.S. Coast Guard, and the Florida Department of Environmental Protection entrust daily management activities of Egmont Key NWR to the Florida Park Service, which manages the island to protect and restore the historic structures and for swimming, sunbathing, shelling, and picnicking.

Pinellas NWR was established in 1951 as a breeding ground for colonial bird species. It contains 7 mangrove islands encompassing about 394 acres. The refuge is comprised of Little Bird, Mule, Jackass, Listen, and Whale Island Keys and leases Tarpon and Indian Keys from Pinellas County. A Pinellas County seagrass sanctuary is located around Tarpon and Indian Keys, and the use of internal combustion engines within this zone is prohibited to protect the seagrass beds. Hundreds of brown pelicans and double-crested cormorants and dozens of herons, egrets, and roseate spoonbills nest within Tarpon and Little Bird Keys. Pinellas NWR provides important mangrove habitat for most long-legged wading species, especially the reddish egret. All of the mangrove islands of Pinellas NWR are closed to all public use year-round to protect the migratory birds.

Passage Key NWR was originally designated as a Federal bird reservation by President Roosevelt in 1905, when it consisted of a 60-acre island with a freshwater lake and lush vegetation. However, erosion and hurricanes have virtually destroyed the key, and it is now a meandering sand bar varying in size from 0.5 to 10 acres, depending on weather. In 1970, Passage Key NWR was designated a Wilderness Area. The refuge's objective is to provide habitat for colonial waterbirds. Hundreds of brown pelicans, laughing gulls, black skimmers, and royal terns, and small numbers of herons and egrets, nested annually until the island was destroyed by a hurricane in 2005. The key once hosted the largest royal tern and

sandwich tern nesting colonies in the State of Florida. Because of its fragility, small size, and to protect the migratory birds that use the island, it is now closed to all public use year-round.

We announce our decision and the availability of the final CCP and FONSI for the Tampa Bay Refuges in accordance with the National Environmental Policy Act (NEPA) [40 CFR 1506.6(b)] requirements. We completed a thorough analysis of impacts on the human environment, which we included in the Draft Comprehensive Conservation Plan and Environmental Assessment (Draft CCP/EA). The CCP will guide us in managing and administering the Tampa Bay Refuges for the next 15 years. Alternative B is the foundation for the CCP.

The compatibility determinations for beach uses, bicycling, boating, camping, competitive sporting events, concessions, geocaching, hiking/walking, military uses, mosquito management, picnicking, photography/video/filming/audio recording, research and surveys, snorkeling and SCUBA diving, and wildlife observation and photography are available in the CCP.

Background

The National Wildlife Refuge System Administration Act of 1966 (16 U.S.C. 668dd–668ee) (Administration Act), as amended by the National Wildlife Refuge System Improvement Act of 1997, requires us to develop a CCP for each national wildlife refuge. The purpose in developing a CCP is to provide refuge managers with a 15-year plan for achieving refuge purposes and contributing toward the mission of the National Wildlife Refuge System, consistent with sound principles of fish and wildlife management, conservation, legal mandates, and our policies. In addition to outlining broad management direction on conserving wildlife and their habitats, CCPs identify wildlife-dependent recreational opportunities available to the public, including opportunities for hunting, fishing, wildlife observation, wildlife photography, and environmental education and interpretation. We will review and update the CCP at least every 15 years in accordance with the Administration Act.

Comments

Copies of the Draft CCP/EA for the Tampa Bay Refuges were made available for a 30-day public review and comment period as announced in the **Federal Register** on April 24, 2009 (74 FR 18744). We held two meetings to present the Draft CCP/EA to the public and to solicit comments. Approximately 57 persons attended the two meetings. A total of 23 comment letters was received by mail or e-mail from 12 persons and 8 organizations. All comments were considered and thoroughly evaluated. Responses to the comments are contained in Appendix D of the CCP.

Selected Alternative

After considering the comments we received and based on the professional judgment of the planning team, we selected Alternative B for implementation. Under Alternative B, we will continue the cooperative agreement with the State to manage Egmont Key NWR and will establish monthly communications and quarterly meetings to better coordinate our efforts. A visitors center will be established at the Egmont Key NWR Guardhouse, and interpretive signs and information distribution will be increased. Our primary mission will continue to be providing habitat and protection for wildlife. We will assume more of a leadership role in coordinating, directing, and conducting bird and other wildlife surveys; monitoring and conducting research on gopher tortoises; and identifying, mapping, and protecting State-listed plant species with partners.

Authority

This notice is published under the authority of the National Wildlife Refuge System Improvement Act of 1997, Public Law 105–57.

Dated: August 24, 2009.

Patrick Leonard,

Acting Regional Director.

Editorial Note: This document was received in the Office of the Federal Register on June 16, 2010.

[FR Doc. 2010–14876 Filed 6–18–10; 8:45 am]

BILLING CODE 4310–55–P

DEPARTMENT OF THE INTERIOR

Bureau of Land Management

[LLNM910000 L10200000.PH0000]

Notice of Intent To Establish and Call for Nominations for the New Mexico Resource Advisory Councils

AGENCY: Bureau of Land Management, Interior.

ACTION: Notice.

SUMMARY: The BLM is publishing this notice in accordance with the Federal Land Policy and Management Act (FLPMA) and the Federal Advisory Committee Act (FACA). The Bureau of Land Management (BLM) gives notice that the Secretary of the Interior is establishing four resource advisory councils in New Mexico to represent the four BLM districts in the State. This notice is also to solicit public nominations for each of the four New Mexico Resource Advisory Councils (RAC). The RACs provide advice and recommendations on land use planning and management of the public lands within their geographic area.

DATES: All nominations must be received no later than August 5, 2010.

ADDRESSES: *See* **SUPPLEMENTARY INFORMATION** for the address of BLM New Mexico District Offices accepting nominations.

FOR FURTHER INFORMATION CONTACT: Theresa Herrera, Public Affairs Specialist, New Mexico State Office, Bureau of Land Management, 301 Dinosaur Trail, Santa Fe, NM 87508, telephone (505) 954–2021; or e-mail *Theresa_Herrera@blm.gov.*

SUPPLEMENTARY INFORMATION: The Federal Land Policy and Management Act (FLPMA) (43 U.S.C. 1739) directs the Secretary of the Interior to involve the public in planning and issues related to management of lands administered by the BLM. Section 309 of FLPMA directs the Secretary to establish 10- to 15-member citizen-based advisory councils that are consistent with the Federal Advisory Committee Act (FACA). The rules governing RACs are found at 43 CFR subpart 1784. As required by FACA, RAC membership must be balanced and representative of the various interests concerned with the management of the public lands. These include three categories:

Category One—Holders of Federal grazing permits and representatives of organizations associated with energy and mineral development, timber industry, transportation or rights-of-way, developed outdoor recreation, off-highway vehicle use, and commercial recreation;

Category Two—Representatives of nationally or regionally recognized environmental organizations; archaeological and historic organizations, dispersed recreation activities, and wild horse and burro organizations; and

Category Three—Representatives of State, county, or local elected office; representatives and employees of a State agency responsible for managing natural resources; representatives of Indian tribes within or adjacent to the area for which the council is organized;

representatives of academia who are employed in natural sciences; and the public-at-large.

Individuals may nominate themselves or others. Nominees must be residents of the district in which the RAC has jurisdiction. The BLM will evaluate nominees based on their education, training, experience, and knowledge of the geographical area of the RAC. Nominees should demonstrate a commitment to collaborative resource decisionmaking. The Obama Administration prohibits individuals who are currently federally registered lobbyists to serve on all FACA and non-FACA boards, committees, or councils. The following must accompany all nominations:

—Letters of reference from represented interests or organizations;

—A completed background information nomination form; and

—Any other information that addresses the nominee's qualifications.

Simultaneous with this notice, BLM district offices will issue press releases providing additional information for submitting nominations, with specifics about the number and categories of member positions available for each RAC in the State. Nominations for RACs should be sent to the appropriate BLM offices listed below:

Albuquerque RAC

Edwin Singleton, Albuquerque District Office, BLM, 435 Montant NE., Albuquerque, New Mexico 87107, (505) 761–8700.

Farmington RAC

Steve Henke, Farmington District Office, BLM, 1235 La Plata Highway, Farmington, New Mexico 87401, (505) 599–8900.

Las Cruces RAC

Bill Childress, Las Cruces District Office, BLM, 1800 Marquess Street, Las Cruces, New Mexico 88005, (575) 525–4300.

Pecos RAC

Doug Burger, Pecos District Office, BLM, 1717 West Second Street, Roswell, New Mexico 88201, (575) 627–0272.

Certification Statement: I hereby certify that the BLM New Mexico Resource Advisory Councils are necessary and in the public interest in connection with the Secretary's responsibilities to manage the lands, resources, and facilities administered by the BLM.

Dated: June 11, 2010.

Ken Salazar,

Secretary.

[FR Doc. 2010–14930 Filed 6–18–10; 8:45 am]

BILLING CODE 4310–FB–P

DEPARTMENT OF THE INTERIOR

Bureau of Land Management

[WY–923–1310–FI; WYW146295]

Notice of Proposed Reinstatement of Terminated Oil and Gas Lease, Wyoming

AGENCY: Bureau of Land Management, Interior.

ACTION: Notice of Proposed Reinstatement of Terminated Oil and Gas Lease.

SUMMARY: Under the provisions of the Mineral Lands Leasing Act of 1920, the Bureau of Land Management (BLM) received a petition for reinstatement from Medallion Exploration for competitive oil and gas lease WYW146295 for land in Sheridan County, Wyoming. The petition was timely filed and was accompanied by all the rentals due since the date the lease terminated under the law.

FOR FURTHER INFORMATION CONTACT: Bureau of Land Management, Julie L. Weaver, Chief, Fluid Minerals Adjudication, at (307) 775–6176.

SUPPLEMENTARY INFORMATION: The lessee has agreed to the amended lease terms for rentals and royalties at rates of $10 per acre or fraction thereof, per year and 16⅔ percent, respectively. The lessee has paid the required $500 administrative fee and $163 to reimburse the Department for the cost of this **Federal Register** notice. The lessee has met all the requirements for reinstatement of the lease as set out in Sections 31(d) and (e) of the Mineral Lands Leasing Act of 1920 (30 U.S.C. 188), and the BLM is proposing to reinstate lease WYW146295 effective October 1, 2009, under the original terms and conditions of the lease and the increased rental and royalty rates cited above. The BLM has not issued a valid lease affecting the lands to any other interest in the interim.

Julie L. Weaver,

Chief, Fluid Minerals Adjudication.

[FR Doc. 2010–14915 Filed 6–18–10; 8:45 am]

BILLING CODE 4310–22–P

DEPARTMENT OF THE INTERIOR

Bureau of Land Management

[WY–923–1310–FI; WYW175014]

Notice of Proposed Reinstatement of Terminated Oil and Gas Lease, WYW175014, Wyoming

AGENCY: Bureau of Land Management, Interior.

ACTION: Notice.

SUMMARY: Under the provisions of the Mineral Lands Leasing Act of 1920, as amended, the Bureau of Land Management (BLM) received a petition for reinstatement from Trident Oil & Gas LLC for competitive oil and gas lease WYW175014 for land in Niobrara County, Wyoming. The petition was timely filed and was accompanied by all the rentals due since the date the lease terminated under the law.

FOR FURTHER INFORMATION CONTACT: Bureau of Land Management, Julie L. Weaver, Chief, Fluid Minerals Adjudication, at (307) 775–6176.

SUPPLEMENTARY INFORMATION: The lessee has agreed to the amended lease terms for rentals and royalties at rates of $10 per acre or fraction thereof, per year and 16⅔ percent, respectively. The lessee has paid the required $500 administrative fee and $163 to reimburse the Department for the cost of this **Federal Register** notice. The lessee has met all the requirements for reinstatement of the lease as set out in Sections 31(d) and (e) of the Mineral Lands Leasing Act of 1920 (30 U.S.C. 188), and the Bureau of Land Management is proposing to reinstate lease WYW175014 effective November 1, 2009, under the original terms and conditions of the lease and the increased rental and royalty rates cited above. The BLM has not issued a valid lease to any other interest affecting the lands.

Julie L. Weaver,

Chief, Fluid Minerals Adjudication.

[FR Doc. 2010–14933 Filed 6–18–10; 8:45 am]

BILLING CODE 4310–22–P

DEPARTMENT OF THE INTERIOR

Bureau of Land Management

[LLNM920000 L13100000 FI0000; TXNM–107314]

Notice of Proposed Reinstatement of Terminated Oil and Gas Lease, Texas

AGENCY: Bureau of Land Management, Interior.

ACTION: Notice of reinstatement of terminated oil and gas lease.

SUMMARY: Under the Class II provisions of the Federal Oil and Gas Royalty Management Act of 1982, the Bureau of Land Management (BLM) received a petition for reinstatement of oil and gas lease TXNM 107314 from the lessee, Southern Bay Energy LLC, for lands in Washington County, Texas. The petition was filed on time and was accompanied by all the rentals due since the date the lease terminated under the law.

FOR FURTHER INFORMATION CONTACT: Margie Dupre, Bureau of Land Management, New Mexico State Office, P.O. Box 27115, Santa Fe, New Mexico 87502 or at (505) 954–2142.

SUPPLEMENTARY INFORMATION: No intervening valid lease has been issued that affects the lands. The lessee agrees to new lease terms for rentals and royalties of $10 per acre or fraction thereof, per year, and 16 ⅔ percent, respectively. The lessee paid the required $500 administrative fee for the reinstatement of the lease and the $166 cost for publishing this Notice in the **Federal Register**. The lessee met all the requirements for reinstatement of the lease as set out in Section 31 (d) and (e) of the Mineral Leasing Act of 1920 (30 U.S.C. 188). We are proposing to reinstate lease TXNM 107314, effective the date of termination, December 1, 2009, under the original terms and conditions of the lease and the increased rental and royalty rates cited above.

Margie Dupre,

Land Law Examiner, Fluids Adjudication Team.

[FR Doc. 2010–14918 Filed 6–18–10; 8:45 am]

BILLING CODE 4310–FB–P

DEPARTMENT OF THE INTERIOR

Bureau of Land Management

[LLNM920000 L13100000 FI0000; TXNM–107307, TXNM–107313]

Notice of Proposed Reinstatement of Terminated Oil and Gas Leases, Texas

AGENCY: Bureau of Land Management, Interior.

ACTION: Notice of reinstatement of terminated oil and gas lease.

SUMMARY: Under the Class II provisions of the Federal Oil and Gas Royalty Management Act of 1982, the Bureau of Land Management (BLM) received a petition for reinstatement of oil and gas leases TXNM 107307 and TXNM 107313 from the lessee, Southern Bay Energy, LLC, for lands in Burleson and Washington Counties, Texas. The petition was filed on time and was accompanied by all the rentals due since the date the leases terminated under the law.

FOR FURTHER INFORMATION CONTACT: Margie Dupre, Bureau of Land Management, New Mexico State Office, P.O. Box 27115, Santa Fe, New Mexico 87502 or at (505) 954–2142.

SUPPLEMENTARY INFORMATION: No valid lease has been issued that affects the lands. The lessee agrees to new lease terms for rentals and royalties of $20 per acre or fraction thereof, per year, and 18⅔ percent, respectively. The lessee paid the required $500 administrative fee for the reinstatement of the leases and the $166 cost for publishing this Notice in the **Federal Register**. The lessee met all the requirements for reinstatement of the leases as set out in Section 31 (d) and (e) of the Mineral Leasing Act of 1920 (30 U.S.C. 188). We are proposing to reinstate leases TXNM 107307 and TXNM 107313, effective the date of termination, December 1, 2009, under the original terms and conditions of the lease and the increased rental and royalty rates cited above.

Margie Dupre,

Land Law Examiner, Fluids Adjudication Team.

[FR Doc. 2010–14909 Filed 6–18–10; 8:45 am]

BILLING CODE 4310–FB–P

DEPARTMENT OF THE INTERIOR

Bureau of Land Management

[LLIDT03000.L58740000.EU0000. LXSS028D0000; IDI–35790]

Notice of Realty Action; Direct Sale of Public Lands in Lincoln County, ID

AGENCY: Bureau of Land Management, Interior.

ACTION: Notice of realty action.

SUMMARY: The Bureau of Land Management (BLM) proposes to sell a parcel of public land totaling 40 acres in Lincoln County, Idaho, to the owner of the surrounding private land for the appraised fair market value of $14,000. The private land surrounding the public land is owned by Alan Woodland.

DATES: Comments regarding the proposed sale must be received by the BLM August 5, 2010.

ADDRESSES: Written comments concerning the proposed sale should be sent to Ruth A. Miller, BLM Shoshone Field Manager, 400 West F Street, Shoshone, Idaho 83352.

FOR FURTHER INFORMATION CONTACT: Tara Hagen, Realty Specialist, BLM Shoshone Field Office, 400 West F Street, Shoshone, Idaho 83352 or (208) 732–7205.

SUPPLEMENTARY INFORMATION: The following described public land is being proposed for direct sale to Alan Woodland in accordance with Sections 203 and 209 of the Federal Land Policy and Management Act of 1976, as amended, (43 U.S.C. 1713 and 1719), at no less than the appraised fair market value:

Boise Meridian

T. 6 S., R. 22 E,
Sec. 29, SW¼SW¼.

The area described contains 40 acres in Lincoln County.

The appraised fair market value is $14,000. The public land is identified as suitable for disposal in the 1985 BLM Monument Resource Management Plan, as amended, and is not needed for any other Federal purposes. The direct sale will allow for the subject parcel to be formally consolidated with adjacent private property, the owner of which has currently holds a land use authorization (Cooperative Farm Management Agreement or Land Use Permit) for agricultural purposes. Disposal would alleviate the processing and administration of these land use authorizations, as well as generate funding pursuant to the Federal Land Transaction Facilitation Act (FLTFA) that can be utilized to purchase lands with higher resource values.

The identified public land was identified for disposal in an approved land use plan in effect on or before July 25, 2000; therefore, proceeds from this sale will be deposited into the Federal Land Disposal Account authorized under Section 206 of FLTFA. Under FLTFA, revenues generated from the sale or disposal of lands identified for disposal in land use plans as of July 25, 2000, are directed to an account that can be used by the BLM, the U.S. Forest Service, the National Park Service, and the U.S. Fish and Wildlife Service to purchase lands located within Federally designated areas or with higher resource values from willing sellers.

Regulations contained in 43 CFR 2711.3–3 make allowances for direct sales when a competitive sale is inappropriate and when the public interest would best be served by a direct sale, including the need to recognize an authorized use, such as an existing business which could suffer a substantial economic loss if the tract were purchased by someone other than the authorized user. In accordance with

43 CFR 2710, the BLM authorized officer finds that the public interest would best be served by authorizing the direct sale to Alan Woodland, which would allow the identified lands to be consolidated with Alan Woodland's adjacent private property to continue to be used for agricultural purposes.

It has been determined that the subject parcel contains no known mineral values; therefore, the BLM proposes that the conveyance of the Federal mineral interests occur simultaneously with the sale of the land. On August 25, 2008, the above described land was segregated from appropriation under the public land laws, including the mining laws. The segregation terminates (1) Upon issuance of a patent, (2) publication in the **Federal Register** of a termination of the segregation, or (3) 2 years from the date of segregation, whichever occurs first. The lands will not be sold until at least 60 days after the date of publication in the **Federal Register**. Alan Woodland will be required to pay a $50 nonrefundable filing fee for the conveyance of the available mineral interests. Any patent issued will contain the following terms, conditions, and reservations:

1. A reservation of right-of-way to the United States for ditches and canals constructed by the authority of the United States under the Act of August 30, 1890, 43 U.S.C. 945;
2. A condition that the conveyance be subject to all valid existing rights of record;
3. A notice and indemnification statement under the Comprehensive Environmental Response, Compensation and Liability Act (42 U.S.C. 9620(W)), indemnifying and holding the United States harmless from any release of hazardous materials that may have occurred; and
4. Additional terms and conditions that the authorized officer deems appropriate.

Detailed information concerning the proposed land sale including the appraisal, planning and environmental documents and a mineral report are available for review at the Shoshone Field Office at the location identified in the **ADDRESSES** section above. Normal business hours are 7:45 a.m. to 4:30 p.m., Monday through Friday, except for Federal holidays.

Public Comments: Public comments regarding the proposed sale may be submitted in writing to the BLM Shoshone Field Manager (*see* **ADDRESSES** section) on or before August 5, 2010. Comments received in electronic form, such as e-mail or facsimile, will not be considered. Any adverse comments regarding the proposed sale will be reviewed by the BLM Idaho State Director or other authorized official of the Department of the Interior, who may sustain, vacate, or modify this realty action in whole or in part. In the absence of timely filed objections, this realty action will become the final determination of the Department of the Interior.

Before including your address, phone number, e-mail address, or other personal identifying information in your comment, be advised that your entire comment—including your personal identifying information—may be made publicly available at any time. While you can ask us in your comment to withhold from public review your personal indentifying information, we cannot guarantee that we will be able to do so.

Authority: 43 CFR 2711.1–2(a) and (c).

Ruth A. Miller,

Shoshone Field Manager.

[FR Doc. 2010–14928 Filed 6–18–10; 8:45 am]

BILLING CODE 4310–GG–P

DEPARTMENT OF THE INTERIOR

Bureau of Land Management

[LLIDB01000 L14300000.ES0000 241A.0; 4500012352; IDI–33187]

Notice of Realty Action: Recreation and Public Purposes Act Classification; Lease and Conveyance of Public Land, Boise County, ID

AGENCY: Bureau of Land Management, Interior.

ACTION: Notice of realty action.

SUMMARY: Basin School District #72 in Boise County, Idaho, has filed an application to purchase 98.06 acres of public land under the Recreation and Public Purposes Act (R&PP), as amended, to be used for school facilities. The Bureau of Land Management (BLM) has examined the land and found it suitable to be classified for lease and/or conveyance under the provisions of the R&PP Act, as amended.

DATES: Interested parties may submit written comments regarding this proposed classification and lease or sale of this public land until August 5, 2010.

ADDRESSES: Mail written comments to Terry Humphrey, Four Rivers Field Manager, Bureau of Land Management, Boise District Office, 3948 Development Avenue, Boise, Idaho 83705.

FOR FURTHER INFORMATION CONTACT: Effie Schultsmeier, Four Rivers Realty Specialist, at the above address, via e-mail at *effie_schultsmeier@blm.gov* or phone (208) 384–3357.

SUPPLEMENTARY INFORMATION: The BLM has examined and found suitable to be classified for lease and subsequent conveyance under the provisions of the R&PP Act, as amended (43 U.S.C. 869 *et seq.*), the following public land described below:

Boise Meridian

T. 6 N., R. 5 E.,
Sec. 23, lots 5 and 6, and NE¼SW¼.

The area described contains 96.08 acres, more or less, in Boise County.

In accordance with the R&PP Act, the Basin School District #72 filed an application to purchase the above-described property to develop school facilities. Rental and sale prices have been determined using BLM Recreation and Public Purposes Pricing Guidelines. Additional detailed information pertaining to this application, plan of development, and site plans are in case file IDI 33187, located in the BLM Four Rivers Field Office at the address above.

The land is not needed for any Federal purpose. Lease and subsequent sale of this land is consistent with the BLM Cascade Resource Management Plan dated July 1, 1988, as amended, and would be in the public interest. The Basin School District #72 has not applied for more than 640 acres for school facilities in a year, the limit set in 43 CFR 2741.7(a)(2), and has submitted a statement in compliance with the regulations at 43 CFR 2741.4(b). Any lease and subsequent sale will be subject to the provisions of the R&PP Act and applicable regulations of the Secretary of the Interior. Any lease or patent of this land will also contain the following reservations to the United States:

1. Provisions of the R&PP Act, including but not limited to, the terms required by 43 CFR 2741.9.
2. A right-of-way thereon for ditches and canals constructed by the authority of the United States, Act of August 30, 1890 (43 U.S.C. 945); and
3. All mineral deposits in the land so patented, and to it, or persons authorized by it, the right to prospect for, mine, and remove such deposits from the same under applicable law and regulations to be established by the Secretary of the Interior.

Any lease or sale will also be subject to valid existing rights; will contain any terms or conditions required by law or regulation, including, but not limited to, any terms or conditions required by 43 CFR 2741.9; and will contain an appropriate indemnification clause protecting the United States from claims arising out of the lessee's or patentee's

use, occupancy, or operations on the leased or patented lands. It will also contain any other terms or conditions deemed necessary or appropriate by the authorized officer.

As of June 21, 2010, the above-described land is segregated from appropriation under the public land laws, including the United States mining laws, except for lease and sale under the R&PP Act.

Public Comments: Interested parties may submit comments involving the suitability of the land for school facilities. Comments on the classification are restricted to whether the land is physically suited for the proposal, whether the use will maximize future uses of the land, whether the use is consistent with local planning and zoning, or if the use is consistent with State and Federal programs.

Interested parties may also submit comments regarding the specific use proposed in the application and plan of development, whether the BLM followed proper administrative procedures in reaching its decision, or any other factor not directly related to the suitability of the land for R&PP Act use.

Before including your address, phone number, e-mail address, or other personal identifying information in your comment, you should be aware that your entire comment—including your personal identifying information—may be made publicly available at any time. While you can ask us in your comment to withhold your personal identifying information from public review, we cannot guarantee that we will be able to do so.

Any adverse comments on the proposed classification, lease and sale will be reviewed by the BLM Idaho State Director, who may sustain, vacate, or modify this realty action and classification and issue a final determination. In the absence of any objections, the classification of the land described in this notice will become effective on August 20, 2010. The land will not be available for lease and conveyance until after the classification becomes effective.

Authority: 43 CFR 2741.5.

Terry Humphrey,

Four Rivers Field Manager.

[FR Doc. 2010–14926 Filed 6–18–10; 8:45 am]

BILLING CODE 4310–GG–P

DEPARTMENT OF THE INTERIOR

Bureau of Land Management

[LLNVE00000 L14300000.ES0000 241A; N–85701; 10–08807; MO#4500012744; TAS: 14X5232]

Notice of Realty Action: Recreation and Public Purposes Act Classification, Elko County, NV

AGENCY: Bureau of Land Management, Interior.

ACTION: Notice of realty action.

SUMMARY: A Recreation and Public Purposes (R&PP) Act application for lease and/or conveyance of approximately 807.5 acres of public land in Elko County, Nevada, has been filed with the Bureau of Land Management (BLM) by the City of Elko (City). The City proposes to use the land for a waste water reclamation facility. The BLM proposes to classify the lands as suitable for lease and/or conveyance, as specified below.

DATES: Interested parties may submit written comments regarding the proposed conveyance or classification of the lands until August 5, 2010.

ADDRESSES: Mail written comments to the BLM Field Manager, Tuscarora Field Office, 3900 East Idaho Street, Elko, Nevada 89801.

FOR FURTHER INFORMATION CONTACT: Deb McFarlane, (775) 753–0223, or *e-mail: deb_mcfarlane@blm.gov.* An environmental assessment of the proposal is available at the BLM *Web site: http://www.blm.gov/nv/st/en/fo/elko_field_office.html.*

SUPPLEMENTARY INFORMATION: In accordance with Section 7 of the Taylor Grazing Act (43 U.S.C. 315f), and Executive Order No. 6910, the following described public land in Elko County, Nevada, has been examined and found suitable for classification and lease and/or conveyance under the provisions of the R&PP Act, as amended, (43 U.S.C. 869 *et seq.*):

Mount Diablo Meridian

T. 33 N., R. 55 E.,
Sec. 5, lots 6, 7, 9 to 12, inclusive, 26 to 30, inclusive, 32, 34, and 43;
Sec. 6, lots 16, 17, 24, and 26.
T. 34 N., R. 55 E.,
Sec. 29, lots 1 to 4, inclusive, SE¼, SE¼NE¼, and SE¼SW¼;
Sec. 32, SW¼NW¼, W½SW¼, NE¼NW¼NW¼, and S½NW¼NW¼.

The area described contains 807.5 acres, more or less in Elko County.

The R&PP Act and its implementing regulations include an annual limitation of 640 acres on conveyances of public lands for any public purpose to a state or agency or instrumentality of such state for any one of its programs (43 U.S.C. 869; 43 CFR 2741(c)). The City has submitted a plan of development for approximately 807.5 acres as part of its application under the R&PP Act and for the phased expansion of an existing wastewater treatment plant. Each construction phase is planned to take place in support of the overall plan for the water reclamation facility to be located in this one area. Therefore, the BLM proposes to convey these public lands on a phased basis, through several transactions. The BLM proposes to classify 529.8 of these acres as suitable for conveyance pursuant to the 1988 Amendments to the R&PP Act, in order that they may be patented without retention of a reversionary interest by the United States. The BLM proposes to classify the remaining acreage as suitable for lease and/or conveyance under the R&PP Act. During the notice period, the BLM proposes to initially lease the remaining acreage subject to the continuation of existing grazing afforded to holders of grazing permits on the public land, and subject to the requirement that no construction or other activities that may either (1) interfere with the permitted grazing or (2) constitute any purpose which the BLM authorized officer finds may include the disposal, placement, or release of any hazardous substance on such public lands, take place on the leased lands, until such time as the City is prepared to commence construction of the next phase of the water reclamation project, but no sooner than the end of the 2-year notice period (unless such notice is waived by the grazing permittee). At such time as the City is prepared to proceed, the BLM proposes to convey the leased land under the authority of the 1988 Amendments to the R&PP Act, and the regulations at 43 CFR 2743, without retention of a reversionary interest by the United States.

Additional detailed information pertaining to this application, plan of development, and site plans is in case file N–85701 located in the BLM Elko District Office.

The land is not needed for any Federal purpose. Both the proposed conveyance of the 529.8 acres, and the proposed lease and eventual conveyance are consistent with the BLM Elko Resource Management Plan, dated March 11, 1987, and would be in the public interest. The lease and/or as applicable, the patents for both sets of acreages, when issued, will be subject to the provisions of the R&PP Act, as amended, and applicable regulations of the Secretary of the Interior, including,

but not limited to, and especially with respect to the patents, when issued, 43 CFR Subpart 2743, and will contain the following terms, conditions and reservations:

1. A right-of-way thereon reserved to the United States for ditches or canals constructed by the authority of the United States, Act of August 30, 1890 (43 U.S.C. 945);

2. All minerals are reserved to the United States, together with the right to prospect for, mine, and remove such deposits from the same under applicable law and such regulations as the Secretary of the Interior may prescribe, including all necessary access and exit rights;

3. Valid existing rights;

4. Right-of-way N–42787 for fiber optic cable purposes granted to Sprint Communications Company, its successors and assigns, pursuant to the Act of October 21, 1976 (43 U.S.C. 1761);

5. Rights-of-way N–43924 and N–62432 for power line purposes granted to Sierra Pacific Power Company, its successors and assigns, pursuant to the Act of October 21, 1976 (43 U.S.C. 1761);

6. Right-of-way N–46213 for road purposes granted to Elko County, its successors and assigns, pursuant to the Act of October 21, 1976 (43 U.S.C. 1761);

7. Right-of-way N–61260 for telephone line purposes granted to Citizens Communications, its successors and assigns, pursuant to the Act of October 21, 1976 (43 U.S.C. 1761);

8. Right-of-way N–74438 for road purposes granted to William A. Crane, his successors and assigns, pursuant to the Act of October 21, 1976 (43 U.S.C. 1761);

9. Rights of N–77925 for oil and gas lease purposes granted to American Energy Independence Company LLC., pursuant to the Act of December 22, 1987, (30 U.S.C. 181 *et seq.*);

10. Rights of N–83385 for oil and gas lease purposes granted to Wolcott LLC., pursuant to the Act of December 22, 1987, (30 U.S.C. 181 *et seq.*);

11.. Rights of N–86702 for oil and gas development contract purposes granted to Rock Investment Group, pursuant to the Act of February 25, 1920 (30 U.S.C. 181 *et seq.*); and

12. An appropriate indemnification clause protecting the United States from claims arising out of lessees/patentee's use, occupancy, or operations on the leased/patented lands.

On publication of this notice in the **Federal Register**, the land described above will be segregated from all other forms of appropriation under the public land laws, including the general mining laws, except for leasing and/or conveyance under the R&PP Act, leasing under the mineral leasing laws, and disposals under the mineral material disposal laws.

Interested parties may submit comments involving the suitability of the land for a waste water treatment facility. Comments on the classification are restricted to whether the land is physically suited for the proposal, whether the use will maximize the future use or uses of the land, whether the use is consistent with local planning and zoning, or if the use is consistent with state and Federal programs.

Interested parties may submit comments regarding the specific use proposed in the application and plan of development, whether the BLM followed proper administrative procedures in reaching the decision to convey under the R&PP Act, or any other factor not directly related to the suitability of the land for R&PP use.

Before including your address, phone number, e-mail address, or other personal identifying information in your comment, you should be aware that your entire comment—including your personal identifying information—may be made publicly available at any time. While you can ask us in your comment to withhold your personal identifying information from public review, we cannot guarantee that we will be able to do so. Only written comments submitted to the Field Manager, BLM Tuscarora Field Office, will be considered properly filed. Any adverse comments will be reviewed by the BLM Nevada State Director. In the absence of any adverse comments, the decision will become effective on August 20, 2010. The land will not be available for conveyance or lease and eventual conveyance, as applicable, until after the decision becomes effective.

Authority: 43 CFR 2741.5.

David Overcast,

Manager, Tuscarora Field Office.

[FR Doc. 2010–14929 Filed 6–18–10; 8:45 am]

BILLING CODE 4310–HC–P

INTERNATIONAL TRADE COMMISSION

[Investigation Nos. 731–TA–1071 and 1072 (Review)]

Magnesium From China and Russia

AGENCY: United States International Trade Commission.

ACTION: Notice of Commission determinations to conduct full five-year reviews concerning the antidumping duty orders on magnesium from China and Russia.

SUMMARY: The Commission hereby gives notice that it will proceed with full reviews pursuant to section 751(c)(5) of the Tariff Act of 1930 (19 U.S.C. 1675(c)(5)) to determine whether revocation of the antidumping duty orders on magnesium from China and Russia would be likely to lead to continuation or recurrence of material injury within a reasonably foreseeable time. A schedule for the reviews will be established and announced at a later date. For further information concerning the conduct of these reviews and rules of general application, consult the Commission's Rules of Practice and Procedure, part 201, subparts A through E (19 CFR part 201), and part 207, subparts A, D, E, and F (19 CFR part 207).

DATES: *Effective Date:* June 4, 2010.

FOR FURTHER INFORMATION CONTACT: Mary Messer (202–205–3193), Office of Investigations, U.S. International Trade Commission, 500 E Street, SW., Washington, DC 20436. Hearing-impaired persons can obtain information on this matter by contacting the Commission's TDD terminal on 202–205–1810. Persons with mobility impairments who will need special assistance in gaining access to the Commission should contact the Office of the Secretary at 202–205–2000. General information concerning the Commission may also be obtained by accessing its Internet server (*http://www.usitc.gov*). The public record for these reviews may be viewed on the Commission's electronic docket (EDIS) at *http://edis.usitc.gov*.

SUPPLEMENTARY INFORMATION: On June 4, 2010, the Commission determined that it should proceed to full reviews in the subject five-year reviews pursuant to section 751(c)(5) of the Act. The Commission found that both the domestic and respondent interested party group responses to its notice of institution (75 FR 9252, March 1, 2010) were adequate.[1] A record of the Commissioners' votes, the Commission's statement on adequacy, and any individual Commissioner's statements will be available from the Office of the Secretary and at the Commission's Web site.

Authority: These reviews are being conducted under authority of title VII of the Tariff Act of 1930; this notice is published pursuant to section 207.62 of the Commission's rules.

[1] Commissioner Dean A. Pinkert is not participating in these reviews.

Issued: June 14, 2010.

By order of the Commission.

Marilyn R. Abbott,

Secretary to the Commission.

[FR Doc. 2010–14883 Filed 6–18–10; 8:45 am]

BILLING CODE 7020–02–P

INTERNATIONAL TRADE COMMISSION

[USITC SE–10–020]

Government in the Sunshine Act Meeting Notice

AGENCY HOLDING THE MEETING: International Trade Commission.

TIME AND DATE: June 24, 2010 at 10:45 a.m.

PLACE: Room 101, 500 E Street, SW., Washington, DC 20436, Telephone: (202) 205–2000.

STATUS: Open to the public.

MATTERS TO BE CONSIDERED:

1. Agenda for future meetings: none.
2. Minutes.
3. Ratification List.
4. Inv. Nos. 701–TA–465 and 731–TA–1161 (Final) (Certain Steel Grating from China)—briefing and vote. (The Commission is currently scheduled to transmit its determinations and Commissioners' opinions to the Secretary of Commerce on or before July 6, 2010.)
5. Outstanding action jackets: none.

In accordance with Commission policy, subject matter listed above, not disposed of at the scheduled meeting, may be carried over to the agenda of the following meeting.

Issued: June 14, 2010.

By order of the Commission.

William R. Bishop,

Hearings and Meetings Coordinator.

[FR Doc. 2010–15014 Filed 6–17–10; 11:15 am]

BILLING CODE 7020–02–P

INTERNATIONAL TRADE COMMISSION

[USITC SE–10–021]

Government in the Sunshine Act Meeting Notice

AGENCY HOLDING THE MEETING: International Trade Commission.

TIME AND DATE: June 22, 2010 at 9:30 a.m.

PLACE: Room 101, 500 E Street, SW., Washington, DC 20436, Telephone: (202) 205–2000.

STATUS: Open to the public.

MATTERS TO BE CONSIDERED

1. Agenda for future meetings: None.
2. Minutes.
3. Ratification list.
4. Inv. No. 731–TA–1070B (Review) (Certain Tissue Paper Products from China)—briefing and vote. (The Commission is currently scheduled to transmit its determinations and Commissioners' opinions to the Secretary of Commerce on or before July 1, 2010).
5. Outstanding action jackets: None.

In accordance with Commission policy, subject matter listed above, not disposed of at the scheduled meeting, may be carried over to the agenda of the following meeting.

Issued: June 14, 2010.

By order of the Commission.

William R. Bishop,

Hearings and Meetings Coordinator.

[FR Doc. 2010–15013 Filed 6–17–10; 11:15 am]

BILLING CODE 7020–02–P

DEPARTMENT OF JUSTICE

Notice of Lodging of Consent Decree Under the Clean Water Act

Notice is hereby given that on June 2, 2010, a proposed Consent Decree (the "Decree") in *United States* v. *State of Alaska, Department of Transportation and Public Facilities,* Civil Case No. 3:10–cv–00115–JWS, was lodged with the United States District Court for the District of Alaska.

In a complaint filed on the same day, the United States alleged that the State of Alaska Department of Transportation and Public Facilities ("Alaska DOTPF") was liable, pursuant to Section 309(b) and (d) of the Clean Water Act, 33 U.S.C. 1319(b) and (d), for civil penalties and injunctive relief for discharging fill material without a permit at eleven sites on the Kenai Peninsula during the fall of 2002, in violation of Section 404 of the Act, 33 U.S.C. 1344. The complaint also alleged that Alaska DOTPF violated the Act's requirements governing the discharge of storm water at three road and bridge construction sites during the summers of 2005 and 2006, in violation of Section 402 of the Act, 33 U.S.C. 1342.

Pursuant to the Decree, Alaska DOTPF will (1) pay a civil penalty of $140,000; (2) pay $850,000 in mitigation to acquire and protect valuable riparian areas; (3) revegetate three sites at which unpermitted fill was discharged; and (4) undertake various actions to increase the training of its employees and increase the nature and quality of its efforts to inspect for and comply with storm water regulations.

The Department of Justice will receive, for a period of thirty (30) days from the date of this publication, comments relating to the Decree. Comments should be addressed to the Assistant Attorney General, Environment and Natural Resources Division, and either e-mailed to *pubcomment-ees.enrd@usdoj.gov* or mailed to P.O. Box 7611, U.S. Department of Justice, Washington, DC 20044–7611, and should refer to *United States* v. *State of Alaska Department of Transportation and Public Facilities,* D.J. Ref. 90–5–1–1–08977.

During the public comment period, the Decree may be examined on the following Department of Justice Web site, *http://www.usdoj.gov/enrd/Consent_Decrees.html.* A copy of the Decree may also be obtained by mail from the Consent Decree Library, P.O. Box 7611, U.S. Department of Justice, Washington, DC 20044–7611 or by faxing or e-mailing a request to Tonia Fleetwood (*tonia.fleetwood@usdoj.gov*), fax no. (202) 514–0097, phone confirmation number (202) 514–1547. In requesting a copy from the Consent Decree Library, please enclose a check in the amount of $7.75 (25 cents per page reproduction cost) payable to the U.S. Treasury or, if by e-mail or fax, forward a check in that amount to the Consent Decree Library at the stated address.

Maureen Katz,

Assistant Section Chief, Environmental Enforcement Section, Environment and Natural Resources Division.

[FR Doc. 2010–14811 Filed 6–18–10; 8:45 am]

BILLING CODE 4410–15–P

DEPARTMENT OF JUSTICE

Federal Bureau of Investigation

[OMB Number 1110–0011]

Violent Criminal Apprehension Program; Agency Information Collection Activities: Proposed Collection, Comments Requested

ACTION: 60-day notice of information collection under review: Revision of a currently approved collection due to expire 10/31/2010, Violent Criminal Apprehension Program.

The Department of Justice, Federal Bureau of Investigation, Critical Incident Response Group will be submitting the following information collection request to the Office of Management and Budget (OMB) for review and clearance in accordance with established review procedures of the Paperwork Reduction Act of 1995. The proposed information collection is published to obtain comments from the

public and affected agencies. Comments are encouraged and will be accepted until August 20, 2010.

This process is conducted in accordance with 5 CFR 1320.10.

All comments, suggestions, or questions regarding additional information, to include obtaining a copy of the proposed information collection instrument with instructions, should be directed to Lesa Marcolini, Program Manager, Federal Bureau of Investigation, Critical Incident Response Group, ViCAP, FBI Academy, Quantico, Virginia 22135; facsimile (703) 632–4239.

Written comments and suggestions from the public and affected agencies concerning the proposed collection of information are encouraged. Comments should address one or more of the following four points:

(1) Evaluate whether the proposed collection of information is necessary for the proper performance of the functions of the agency, including whether the information will have practical utility;

(2) Evaluate the accuracy of the agency's estimate of the burden of the proposed collection of information, including the validity of the methodology and assumptions used;

(3) Enhance the quality, utility, and clarity of the information to be collected; and

(4) Minimize the burden of the collection of information on those who are to respond, including through the use of appropriate automated, electronic, mechanical, or other technological collection techniques of other forms of information technology, *e.g.,* permitting electronic submission of responses.

Overview of This Information Collection

(1) *Type of information collection:* Revision of a currently approved collection.

(2) *The title of the form/collection:* ViCAP Case Submission Form, FD–676.

(3) *The agency form number, if any, and the applicable component of the department sponsoring the collection:* Forms 676; Critical Incident Response Group, Federal Bureau of Investigation, Department of Justice.

(4) *Affected public who will be asked or required to respond, as well as a brief abstract: Primary:* State and local government law enforcement agencies charged with the responsibility of investigating violent crimes.

Established by the Department of Justice in 1985, ViCAP serves as the national repository for violent crimes; specifically:

Homicides and attempted homicides, especially those that (a) involve an abduction, (b) are apparently random, motiveless, or sexually oriented, or (c) are known or suspected to be part of a series.

Sexual assaults, especially those that (a) were committed by a stranger or (b) are known or suspected to be part of a series.

Missing persons, where the circumstances indicate a strong possibility of foul play and the victim is still missing.

Unidentified human remains, where the manner of death is known or suspected to be homicide.

Comprehensive case information submitted to ViCAP is maintained in the ViCAP Web National Crime Database and is automatically compared to all other cases in the database to identify similarities.

(5) *An estimate of the total number of respondents and the amount of time estimated for an average respondent to respond:* Of the approximately 17,000 government entities that are eligible to submit cases, it is estimated that forty to sixty percent will actually submit cases to ViCAP. The time burden of the respondents is less than 60 minutes per form.

(6) A*n estimate of the total public burden (in hours) associated with this collection:* There are approximately 10,000 hours, annual burden, associated with this information collection.

If additional information is required contact: Ms. Lynn Bryant, Department Clearance Officer, Policy and Planning Staff, Justice Management Division, United States Department of Justice, Two Constitution Square, Room 2E–502, 145 N Street, NE., Washington, DC 20530.

Dated: June 16, 2010.

Lynn Bryant,

Department Clearance Officer, PRA, United States Department of Justice.

[FR Doc. 2010–14910 Filed 6–18–10; 8:45 am]

BILLING CODE 4410–02–P

DEPARTMENT OF JUSTICE

Antitrust Division

Notice Pursuant to the National Cooperative Research and Production Act of 1993—IMS Global Learning Consortium, Inc.

Correction

The document appearing on June 4, 2010, 75 FR 31816, should read as follows:

The title INS Global Consortium, Inc. should read as IMS Global Learning Consortium, Inc.;

In the second line, first paragraph, INS should read as IMS;

In the second to last paragraph, INS should read as IMS.

Patricia A. Brink,

Deputy Director of Operations, Antitrust Division.

[FR Doc. 2010–14859 Filed 6–18–10; 8:45 am]

BILLING CODE 4410–11–M

DEPARTMENT OF JUSTICE

Antitrust Division

Notice Pursuant to the National Cooperative Research and Production Act of 1993—Information Card Foundation

Notice is hereby given that, on May 19, 2010, pursuant to Section 6(a) of the National Cooperative Research and Production Act of 1993, 15 U.S.C. 4301 *et seq.* ("the Act"), Information Card Foundation has filed written notifications simultaneously with the Attorney General and the Federal Trade Commission disclosing changes in its membership. The notifications were filed for the purpose of extending the Act's provisions limiting the recovery of antitrust plaintiffs to actual damages under specified circumstances. Specifically, CA, Inc., Washington, DC, and Verizon Business Network Services, Inc., Ashburn, VA, have been added as parties to this venture.

No other changes have been made in either the membership or planned activity of the group research project. Membership in this group research project remains open, and Information Card Foundation intends to file additional written notifications disclosing all changes in membership.

On June 2, 2008, Information Card Foundation filed its original notification pursuant to Section 6(a) of the Act. The Department of Justice published a notice in the **Federal Register** pursuant to Section 6(b) of the Act on July 16, 2008 (73 FR 40883).

The last notification was filed with the Department on January 29, 2010. A notice was published in the **Federal Register** pursuant to Section 6(b) of the Act on March 10, 2010 (75 FR 11197).

Patricia A. Brink,

Deputy Director of Operations, Antitrust Division.

[FR Doc. 2010–14860 Filed 6–18–10; 8:45 am]

BILLING CODE 4410–11–M

DEPARTMENT OF JUSTICE

Antitrust Division

Notice Pursuant to the National Cooperative Research and Production Act of 1993; National Warheads and Energetics Consortium

Notice is hereby given that, on May 26, 2010, pursuant to section 6(a) of the National Cooperative Research and Production Act of 1993, 15 U.S.C. 4301 *et sect.* ("the Act"), the National Warheads and Energetics Consortium ("NWEC") has filed a written notification simultaneously with the Attorney General and the Federal Trade Commission disclosing changes in its membership. The notifications were filed for the purpose of extending the Act's provisions limiting the recovery of antitrust plaintiffs to actual damages under specified circumstances. Specifically, the Combined Systems, Inc., Jamestown, PA; QinetiQ North America, Reston, VA; and St. Mark's Powder, St. Marks, FL, have been added as parties to this venture.

Also, Advanced Ceramics Research, Tucson, AZ; ANEASOL, LLC, Santa Fe, NM; AMEC, Somerset, NJ; Applied Research Associates, Albuquerque, NM; Applied Spectra, Inc., Fremont, CA; Axsun Technologies, Inc., Naples, FL; BEC Manufacturing Corporation, Saddle Brook, NJ; Bipolar Technologies, Provo, UT; BlastGard International, Inc., Clearwater, FL; Cartridge Actuated Devices, Inc., Fairfield, NJ; CFD Research Corporation, Huntsville, AL; Chemical Compliance Systems, Inc., Lake Hopatcong, NJ; DCS Corporation, Alexandria, VA; Dynamic Systems and Research Corporation, Albuquerque, NM; Eaton Associates, LaPorte, IN; Energetics Material Management, East Ridge, TN; Enig Associates, Inc., Silver Spring, MD; ET Materials, LLC, Elk Grove, CA; Folsom Technologies International, LLC, East Greenbush, NY; Hi-Shear Technology Corporation, Torrance, CA; Hittite Microwave Corporation, Chelmsford, MA; Honeywell International, Inc., Defense and Space/Missiles and Munitions, Redmond, WA; Hughes Associates, Inc., Baltimore, MD; L–3 Communications—BT Fuze Products Division, Mt. Arlington, NJ; Material Processing and Research, Inc., Hackensack, NJ; Mentis Sciences, Inc., Manchester, NH; Midcom, Inc., Watertown, SD; Milli Sensor Systems and Actuators Inc., West Newton, MA; Missouri University of Science and Technology, Columbia, MO; mPhase Technologies, Inc., Little Falls, NJ; New Jersey Institute of Technology, Newark, NJ; NexTec, Xenia, OH; Northrop Grumman Space Technology, Redondo Beach, CA; Omnitek Partners LLC, Bay Shore, NY; Pendulum Management Company, LLC, Charlestown, IN; PIKA International, Inc., Stafford, TX; Planning Systems, Reston, VA; Plasma Processes, Inc., Huntsville, AL; Proton Aerospace Corporation, Jupiter, FL; Ridge Manufacturing Corporation, Rockaway, NJ; Rutgers, The State University of New Jersey, New Brunswick, NJ; Scientific Applications & Research Associates, Inc., Cypress, CA; Shalimar Research & Technology, Inc., Niceville, FL; Special Devices, Inc., Moorpark, CA; Stanley Associates, Huntsville, AL; SURVICE Engineering Company, Belcamp, MD; The Ex One Company, LLC, Irwin, PA; Thermal and Mechanical Technologies, Lafayette, LA; Tyco Electronics, Lowell, MA; University of Denver, Denver, CO; University of Maryland, College Park, MD; University of Mississippi, University, MS; and Valentec Systems Inc., Minden, LA, have withdrawn as parties to this venture.

No other changes have been made in either the membership or planned activity of the group research project. Membership in this group research project remains open, and NWEC intends to file additional written notifications disclosing all changes in membership.

On May 2, 2000, NWEC filed its original notification pursuant to Section 6(a) of the Act. The Department of Justice published a notice in the **Federal Register** pursuant to section 6(b) of the Act on June 30, 2000 (65 FR 40693).

The last notification was filed with the Department on April 16, 2009. A notice was published in the **Federal Register** pursuant to section 6(b) of the Act on May 22, 2009 (74 FR 24035).

Patricia A. Brink,

Deputy Director of Operations, Antitrust Division.

[FR Doc. 2010–14861 Filed 6–18–10; 8:45 am]

BILLING CODE 4410–11–M

DEPARTMENT OF JUSTICE

Antitrust Division

Notice Pursuant to the National Cooperative Research and Production Act of 1993—National Shipbuilding Research Program

Notice is hereby given that, on May 19, 2010, pursuant to Section 6(a) of the National Cooperative Research and Production Act of 1993, 15 U.S.C. 4301 *et se*q. ("the Act"), National Shipbuilding Research Program ("NSRP") has filed written notifications simultaneously with the Attorney General and the Federal Trade Commission disclosing changes in its membership status. The notifications were filed for the purpose of extending the Act's provisions limiting the recovery of antitrust plaintiffs to actual damages under specified circumstances. Specifically, Bender Shipbuilding & Repair Co., Inc., Mobile, AL, and Manitowoc Marine Group, Manitowoc, WI, have withdrawn as parties from this venture. Additionally, Marinette Marine Corporation, Marinette, WI, has been added as a party to this venture.

No other changes have been made in either the membership or planned activity of the group research project. Membership in this group remains open, and NSRP intends to file additional written notifications disclosing all changes in membership.

On March 13, 1998, NSRP filed its original notification pursuant to Section 6(a) of the Act. The Department of Justice published a notice in the **Federal Register** pursuant to Section 6(b) of the Act on January 29, 1999 (64 FR 4708).

The last notification was filed with the Department on April 16, 2009. A notice was published in the **Federal Register** pursuant to Section 6(b) of the Act on May 26, 2009 (74 FR 25036).

Patricia A. Brink,

Deputy Director of Operations, Antitrust Division.

[FR Doc. 2010–14862 Filed 6–18–10; 8:45 am]

BILLING CODE 4410–11–M

DEPARTMENT OF JUSTICE

Federal Bureau of Prisons

Notice of Availability of the Record of Decision for Proposed Contract Award to House District of Columbia-Sentenced Felons and Criminal Aliens Within a Contractor-Owned/Contractor-Operated Correctional Facility

AGENCY: U.S. Department of Justice, Federal Bureau of Prisons.

ACTION: Notice of a Record of Decision.

SUMMARY: The U.S. Department of Justice, Federal Bureau of Prisons (BOP) announces the availability of the Record of Decision (ROD) concerning the proposed award of a contract to house approximately 1,380 federal, low-security, adult male District of Columbia (DC)-sentenced felons and criminal aliens within a Contractor-Owned/Contractor-Operated correctional facility.

Background Information

Pursuant to Section 102(2)(c) of the National Environmental Policy Act (NEPA) of 1969 and the Council of Environmental Quality Regulations (40 CFR Parts 1500–1508), the BOP has prepared Draft and Final Environmental Impact Statements (EISs) for the proposed award of a contract to house approximately 1,380 federal, low-security, adult male DC-sentenced felons and criminal aliens within a Contractor-Owned/Contractor-Operated correctional facility.

Project Information

The BOP faces unprecedented growth in its inmate population resulting from federal law enforcement programs. Federal Correctional Institutions housing low-security inmates are especially impacted because DC-sentenced felons and criminal aliens are typically housed at the low-security level. Due to the current shortage of beds within the federal prison system, particularly at the low-security level, the BOP is managing the federal inmate population by assigning minimum and medium-security level institutions as low-security institutions. This, in turn, impacts other security levels by reducing the availability of beds to accommodate minimum- and medium-security inmates. The projected growth in the number of sentenced felons and aliens resulting from increased law enforcement efforts will further exacerbate these population pressures. The DC III procurement serves to address these growth issues on a national basis.

The BOP requires flexibility in managing the shortage of beds at the low-security level as well as the anticipated future increases at this security level. Such management flexibility, involving the use of Contractor-Owned/Contractor-Operated correctional facilities when appropriate, would help to meet population capacity needs in a timely fashion, conform to federal law, and maintain fiscal responsibility while successfully meeting the mission of the BOP. That mission is to protect society by confining offenders in the controlled environments of prison and community-based facilities that are safe, humane, cost-efficient and appropriately secure, and that provide work and other self-improvement opportunities to assist offenders in becoming law-abiding citizens.

The proposed action is to award a contract to house approximately 1,380 federal, low-security, adult male, DC-sentenced felons and criminal aliens within a Contractor-Owned/Contractor-Operated correctional facility. Under the proposed action, the contractor selected would be responsible for ensuring that the correctional facility is operated in a manner consistent with the mission of the BOP and in accordance with state and federal laws and regulations. In addition, the facility selected would be within the proximity of, and have access to, emergency services including medical care, fire protection and law enforcement.

It is anticipated that the BOP will assign a population of approximately 1,380 low-security, adult male inmates, predominantly DC-sentenced felons and criminal aliens, to the selected facility. However, the BOP may designate any inmate within its custody utilizing the same designation criteria as are used at other BOP facilities. All inmate services and programs would be developed and implemented to comply with the BOP's contract requirements and all applicable federal, state and local laws and regulations.

The BOP issued a DEIS in January 2010 with publication of the Notice of Availability (NOA) in the **Federal Register** on January 22, 2010. The NOA provided a start date for the 45-day public comment period beginning on January 22, 2010, and ending on March 8, 2010. During the public comment period public hearings concerning the proposed action and the DEIS were held on February 10, 2010 in Winton, North Carolina and February 24, 2010 in Princess Anne, Maryland.

The FEIS addressed comments received on the DEIS and publication of the NOA in the **Federal Register** concerning the FEIS occurred on May 7, 2010. The 30-day review period for receipt of public comments concerning the FEIS ended on June 7, 2010, during which time comment letters and similar forms of communication were received by the BOP. Each of the comment letters are similar to comments received on the DEIS and were considered in the decision presented in the ROD.

BOP provided written notices of the availability of the DEIS and FEIS in the **Federal Register**, two newspapers with local and regional circulations, and through two local public libraries. The BOP also distributed approximately 175 copies (each) of the DEIS and FEIS to federal agencies, state and local governments, elected officials, interested organizations, and individuals.

The BOP evaluated alternatives as part of the EIS including the No Action Alternative; implementation of the proposed action at the Winton, North Carolina site (involving use of the Rivers Correctional Institution) to house the federal inmate population; and implementation of the proposed action at the Princess Anne, Maryland site (involving development of a new Contractor-Owned/Contractor-Operated correctional facility) to house the federal inmate population. Each of the alternative sites in Winton, North Carolina and Princess Anne, Maryland is examined in detail in the Draft and Final EISs with contract award to the Winton site in North Carolina identified in the ROD as the Preferred Alternative.

Availability of Record of Decision

The ROD and other information regarding this undertaking are available upon request. To request a copy of the ROD, please contact: Richard A. Cohn, Chief, or Issac J. Gaston, Site Selection Specialist, Capacity Planning and Site Selection Branch, Federal Bureau of Prisons, 320 First Street, NW., Washington, DC 20534/*Tel:* 202–514–6470/*Fax:* 202–616–6024/E-mail: *racohn@bop.gov* or *igaston@bop.gov.*

FOR FURTHER INFORMATION CONTACT: Richard A. Cohn, or Issac J. Gaston, Federal Bureau of Prisons.

Dated: June 11, 2010.

Issac Gaston,

Site Specialist, Capacity Planning and Site Selection Branch.

[FR Doc. 2010–14743 Filed 6–18–10; 8:45 am]

BILLING CODE P

DEPARTMENT OF LABOR

Occupational Safety and Health Administration

Maritime Advisory Committee for Occupational Safety and Health (MACOSH)

AGENCY: Occupational Safety and Health Administration (OSHA), Labor.

ACTION: Announcement of meeting.

SUMMARY: The purpose of this **Federal Register** notice is to announce the Advisory Committee and workgroup meetings scheduled for July 13–14, 2010. The Maritime Advisory Committee for Occupational Safety and Health (MACOSH or Committee) was established under Section 7 of the Occupational Safety and Health Act of 1970 to advise the Assistant Secretary of Labor for Occupational Safety and Health on issues relating to occupational safety and health in the maritime industries.

DATES: The Shipyard and Longshoring workgroups will meet on Tuesday, July 13, 2010, 8 a.m. until approximately 4

p.m. (PT), and the Committee will meet on Wednesday, July 14, 2010, from 8:30 a.m. until approximately 4:30 p.m. (PT).

ADDRESSES: The Committee and workgroups will meet at the Renaissance Long Beach Hotel, 111 East Ocean Boulevard, Long Beach, CA 90802 ((562) 437–5900). Mail comments, views, or statements in response to this notice to Vanessa L. Welch, Office of Maritime, OSHA, U.S. Department of Labor, Room N–3609, 200 Constitution Avenue, NW., Washington, DC 20210; phone (202) 693–2080; fax (202) 693–1663.

FOR FURTHER INFORMATION CONTACT: For general information about MACOSH and this meeting, contact: Joseph V. Daddura, Director, Office of Maritime, OSHA, U.S. Department of Labor, Room N–3609, 200 Constitution Avenue, NW., Washington, DC 20210; *phone:* (202) 693–2067. Individuals with disabilities wishing to attend the meeting should contact Vanessa L. Welch at (202) 693–2080 no later than July 13, 2010, to obtain appropriate accommodations.

SUPPLEMENTARY INFORMATION: All MACOSH meetings are open to the public. All interested persons are invited to attend the MACOSH meeting at the time and location listed above. The MACOSH agenda will include: an OSHA activities update; a review of the minutes from the previous meeting; and reports from each workgroup. MACOSH may also discuss the following topics based on the workgroup reports: arc flash guidance; fall protection in commercial fishing; ventilation for welding and allied operations in shipyards; eye protection against radiant energy for welding in shipyards; scaffolding and falls (29 CFR 1915 subpart E); shipbreaking guidance; container rail safety guidance; plugging and unplugging reefer safety; mechanics working in the yard at marine terminals; safely servicing terminal equipment in the yard; and freeing inoperable semi-automatic twist locks (SATLs).

Public Participation: Written data, views, or comments for consideration by MACOSH on the various agenda items listed above should be submitted to Vanessa L. Welch at the address listed above. Submissions received by June 29, 2010, will be provided to Committee members and will be included in the record of the meeting. Requests to make oral presentations to the Committee may be granted as time permits.

Authority: This notice was prepared under the direction of David Michaels, PhD, MPH, Assistant Secretary of Labor for Occupational Safety and Health, U.S. Department of Labor, 200 Constitution Avenue, NW., Washington, DC 20210, pursuant to Sections 6(b)(1) and 7(b) of the Occupational Safety and Health Act of 1970 (29 U.S.C. 655(b)(1), 656(b)), the Federal Advisory Committee Act (5 U.S.C. App. 2), Secretary of Labor's Order 5–2007 (72 FR 31160), and 29 CFR part 1912.

Signed at Washington, DC, this 16th day of June 2010.

David Michaels,

Assistant Secretary of Labor for Occupational Safety and Health.

[FR Doc. 2010–14968 Filed 6–18–10; 8:45 am]

BILLING CODE 4510–26–P

NATIONAL AERONAUTICS AND SPACE ADMINISTRATION

[Notice (10–068)]

NASA Advisory Council; Science Committee; Meeting

AGENCY: National Aeronautics and Space Administration.

ACTION: Notice of meeting.

SUMMARY: In accordance with the Federal Advisory Committee Act, Public Law 92–463, as amended, the National Aeronautics and Space Administration (NASA) announces a meeting of the Science Committee of the NASA Advisory Council (NAC). This Committee reports to the NAC. The Meeting will be held for the purpose of soliciting from the scientific community and other persons scientific and technical information relevant to program planning.

DATES: Tuesday, July 13, 2010, 8:30 a.m. to 5 p.m., and Wednesday, July 14, 2010, 8:30 a.m. to 1:30 p.m., e.d.t.

ADDRESSES: NASA Headquarters, 300 E Street, SW., Room 3H46, Washington, DC 20546.

FOR FURTHER INFORMATION CONTACT: Ms. Marian Norris, Science Mission Directorate, NASA Headquarters, Washington, DC 20546, (202) 358–4452, fax (202) 358–4118, or *mnorris@nasa.gov.*

SUPPLEMENTARY INFORMATION: The meeting will be open to the public up to the capacity of the room. The agenda for the meeting includes the following topics:

—Science Mission Directorate (SMD) program status.
—Discussion of science subcommittees.
—Discussion of earth & space science utilization of the International Space Station.
—Interaction with the Office of the Chief Technologist.
—Interaction with the Exploration Systems Mission Directorate.

It is imperative that the meeting be held on these dates to accommodate the scheduling priorities of the key participants. Attendees will be requested to sign a register and to comply with NASA security requirements, including the presentation of a valid picture ID, before receiving an access badge. Foreign nationals attending this meeting will be required to provide a copy of their passport, visa, or green card in addition to providing the following information no less than 10 working days prior to the meeting: Full name; gender; date/place of birth; citizenship; visa/green card information (number, type, expiration date); passport information (number, country, expiration date); employer/affiliation information (name of institution, address, country, telephone); title/position of attendee. To expedite admittance, attendees with U.S. citizenship can provide identifying information 3 working days in advance by contacting Marian Norris via e-mail at *mnorris@nasa.gov* or by telephone at (202) 358–4452.

Dated: June 15, 2010.

P. Diane Rausch,

Advisory Committee Management Officer, National Aeronautics and Space Administration.

[FR Doc. 2010–14978 Filed 6–18–10; 8:45 am]

BILLING CODE P

OFFICE OF PERSONNEL MANAGEMENT

[OMB Control No. 3206–0172; Standard Form 3104 and Standard Form 3104B]

Submission for OMB Review; Comment Request for Review of a Revised Information Collection

AGENCY: Office of Personnel Management.

ACTION: Notice.

SUMMARY: In accordance with the Paperwork Reduction Act of 1995 (Pub. L. 104–13, May 22, 1995), this notice announces that the Office of Personnel Management (OPM) has submitted to the Office of Management and Budget (OMB) a request for review of a revised information collection. "Application for Death Benefits—FERS" (OMB Control No. 3206–0172; Standard Form 3104), is used by persons applying for death benefits which may be payable under FERS because of the death of an employee, former employee, or retiree who was covered by FERS at the time of his/her death or separation from Federal Service. "Documentation and Elections in Support of Application for

Death Benefits when Deceased was an Employee at the Time of Death—FERS" (OMB Control No. 3206–0172; Standard Form 3104B), is used by applicants for death benefits under FERS if the deceased was a Federal employee at the time of death.

We estimate that approximately 12,734 SF 3104s will be processed annually and each form takes approximately 60 minutes to complete. An annual burden of 12,734 hours is estimated. We estimate that approximately 4,017 SF 3104Bs will be processed annually and each form takes approximately 60 minutes to complete. An annual burden of 4,017 hours is estimated. The total annual estimated burden is 16,751.

For copies of this proposal, contact Cyrus S. Benson on (202) 606–4808, FAX (202) 606–0910 or via E-mail to *Cyrus.Benson@opm.gov.* Please include a mailing address with your request.

DATES: Comments on this proposal should be received within 30 calendar days from the date of this publication.

ADDRESSES: Send or deliver comments to—

James K. Freiert, Acting, Deputy Associate Director, Retirement Operations, Retirement and Benefits, U.S. Office of Personnel Management, 1900 E Street, NW., Room 3305, Washington, DC 20415–3500, and

OMB Desk Officer, Office of Information & Regulatory Affairs, Office of Management and Budget, New Executive Office Building, 725 17th Street, NW., Room 10235, Washington, DC 20503.

FOR INFORMATION REGARDING ADMINISTRATIVE COORDINATION CONTACT: Cyrus S. Benson, Team Leader, Publications Team, RB/RM/Administrative Services, U.S. Office of Personnel Management, 1900 E Street, NW., Room 4H28, Washington DC 20415. (202) 606–4808.

John Berry,

Director, U.S. Office of Personnel Management.

[FR Doc. 2010–14839 Filed 6–18–10; 8:45 am]

BILLING CODE 6325–38–P

OFFICE OF PERSONNEL MANAGEMENT

Submission for Review: Performance Measurement Surveys, OMB Control No. 3206–NEW

AGENCY: U.S. Office of Personnel Management.

ACTION: 60-Day notice and request for comments.

SUMMARY: The Office of Personnel Management (OPM) offers the general public and other federal agencies the opportunity to comment on a new information collection request (ICR) 3206–NEW, Performance Measurement Surveys. As required by the Paperwork Reduction Act of 1995, (Pub. L. 104–13, 44 U.S.C. chapter 35) as amended by the Clinger-Cohen Act (Pub. L. 104–106), OPM is soliciting comments for this collection. The Office of Management and Budget is particularly interested in comments that:

1. Evaluate whether the proposed collection of information is necessary for the proper performance of the functions of the agency, including whether the information will have practical utility;

2. Evaluate the accuracy of the agency's estimate of the burden of the proposed collection of information, including the validity of the methodology and assumptions used;

3. Enhance the quality, utility, and clarity of the information to be collected; and

4. Minimize the burden of the collection of information on those who are to respond, including through the use of appropriate automated, electronic, mechanical, or other technological collection techniques or other forms of information technology, *e.g.,* permitting electronic submissions of responses.

DATES: Comments are encouraged and will be accepted until August 20, 2010. This process is conducted in accordance with 5 CFR part 1320.

ADDRESSES: Interested persons are invited to submit written comments on the proposed information collection to the Office of Personnel Management, Office of the Chief Information Officer, 1900 E Street, NW., Washington, DC 20415, *Attention:* PRA Officer or sent via electronic mail to *pra@opm.gov.*

FOR FURTHER INFORMATION CONTACT: A copy of this ICR, with applicable supporting documentation, may be obtained by contacting the Office of Personnel Management, Office of the Chief Information Officer, 1900 E Street, NW., Washington, DC 20415, *Attention:* PRA Officer or sent via electronic mail to *pra@opm.gov*

SUPPLEMENTARY INFORMATION: The Office of Personnel Management (OPM) leads Federal agencies in shaping human resources management systems to effectively recruit, develop, manage and retain a high quality and diverse workforce. Performance measurement surveys are valuable tools to gather information from our customers so we can design and implement new ways to improve our performance to meet their needs. This collection request includes surveys that we currently use or plan to use during the next three years to measure our performance in providing services to meet our customer needs. The survey instruments include direct mail, telephone contact, focus groups and web exit surveys. Our customers include the general public, Federal benefit recipients, Federal agencies and Federal employees. We estimate 210,900 performance measurement surveys will be completed in the next 3 years. The time estimate varies from 15 minutes to 20 minutes to complete. The estimated burden is 70,275 hours.

U.S. Office of Personnel Management.

John Berry,

Director.

[FR Doc. 2010–14834 Filed 6–18–10; 8:45 am]

BILLING CODE 6325–47–P

OFFICE OF PERSONNEL MANAGEMENT

Submission for Review: Program Services Evaluation Surveys, OMB Control No. 3206–NEW

AGENCY: U.S. Office of Personnel Management.

ACTION: 60-Day Notice and request for comments.

SUMMARY: The Office of Personnel Management (OPM) offers the general public and other federal agencies the opportunity to comment on a new information collection request (ICR) 3206–NEW, Program Services Evaluation Surveys. As required by the Paperwork Reduction Act of 1995, (Pub. L. 104–13, 44 U.S.C. chapter 35), as amended by the Clinger-Cohen Act (Pub. L. 104–106), OPM is soliciting comments for this collection. The Office of Management and Budget is particularly interested in comments that:

1. Evaluate whether the proposed collection of information is necessary for the proper performance of the functions of the agency, including whether the information will have practical utility;

2. Evaluate the accuracy of the agency's estimate of the burden of the proposed collection of information, including the validity of the methodology and assumptions used;

3. Enhance the quality, utility, and clarity of the information to be collected; and

4. Minimize the burden of the collection of information on those who are to respond, including through the use of appropriate automated,

electronic, mechanical, or other technological collection techniques or other forms of information technology, e.g., permitting electronic submissions of responses.

DATES: Comments are encouraged and will be accepted until August 20, 2010. This process is conducted in accordance with 5 CFR part 1320.

ADDRESSES: Interested persons are invited to submit written comments on the proposed information collection to the Office of Personnel Management, Office of the Chief Information Officer, 1900 E Street, NW., Washington, DC 20415, *Attention:* PRA Officer or sent via electronic mail to *pra@opm.gov.*

FOR FURTHER INFORMATION CONTACT: A copy of this ICR, with applicable supporting documentation, may be obtained by contacting the Office of Personnel Management, Office of the Chief Information Officer, 1900 E Street, NW., Washington, DC 20415, *Attention:* PRA Officer or sent via electronic mail to *pra@opm.gov.*

SUPPLEMENTARY INFORMATION: The Office of Personnel Management (OPM) leads Federal agencies in shaping human resources management systems to effectively recruit, develop, manage and retain a high quality and diverse workforce. Program services evaluation surveys are valuable tools to gather information from our customers so we can design and implement new ways to improve our programs to meet their needs. This collection request includes surveys that we currently use or plan to use during the next three years to measure our ability to deliver program services to meet our customer needs. The survey instruments include direct mail, telephone contact, focus groups and web exit surveys. Our customers include the general public, Federal benefit recipients, Federal agencies and Federal employees. We estimate 4,310 program services evaluation surveys will be completed in the next 3 years. The time estimate varies from 1 minute to 40 minutes to complete. The estimated burden is 1,126 hours.

U.S. Office of Personnel Management.

John Berry,

Director.

[FR Doc. 2010–14837 Filed 6–18–10; 8:45 am]

BILLING CODE 6325–47–P

OFFICE OF PERSONNEL MANAGEMENT

Submission for Review: Customer Satisfaction Surveys, OMB Control No. 3206–0236.

AGENCY: U.S. Office of Personnel Management.

ACTION: 60-Day notice and request for comments.

SUMMARY: The Office of Personnel Management (OPM) offers the general public and other federal agencies the opportunity to comment on a revised information collection request (ICR) 3206–0236, Customer Satisfaction Surveys. As required by the Paperwork Reduction Act of 1995 (Pub. L. 104–13, 44 U.S.C. chapter 35) as amended by the Clinger-Cohen Act (Pub. L. 104–106), OPM is soliciting comments for this collection.

The Office of Management and Budget is particularly interested in comments that:

1. Evaluate whether the proposed collection of information is necessary for the proper performance of the functions of the agency, including whether the information will have practical utility;
2. Evaluate the accuracy of the agency's estimate of the burden of the proposed collection of information, including the validity of the methodology and assumptions used;
3. Enhance the quality, utility, and clarity of the information to be collected; and
4. Minimize the burden of the collection of information on those who are to respond, including through the use of appropriate automated, electronic, mechanical, or other technological collection techniques or other forms of information technology, e.g., permitting electronic submissions of responses.

DATES: Comments are encouraged and will be accepted until August 20, 2010. This process is conducted in accordance with 5 CFR part 1320.

ADDRESSES: Interested persons are invited to submit written comments on the proposed information collection to the Office of Personnel Management, Office of the Chief Information Officer, 1900 E Street, NW., Washington, DC 20415, *Attention:* PRA Officer or sent via electronic mail to *pra@opm.gov*.

FOR FURTHER INFORMATION CONTACT: A copy of this ICR, with applicable supporting documentation, may be obtained by contacting the Office of Personnel Management, Office of the Chief Information Officer, 1900 E Street, NW., Washington, DC 20415, *Attention:* PRA Officer or sent via electronic mail to *pra@opm.gov*.

SUPPLEMENTARY INFORMATION: The Office of Personnel Management (OPM) leads Federal agencies in shaping human resources management systems to effectively recruit, develop, manage and retain a high quality and diverse workforce. We need to solicit input from our customers to evaluate our performance in providing services. Customer satisfaction surveys are valuable tools to gather information from our customers so we can design and implement new ways to improve our service to meet their needs. This collection request includes surveys that we currently use or plan to use during the next three years to measure our ability to meet our customer needs. The survey instruments include direct mail, telephone contact, focus groups and web exit surveys. Our customers include the general public, Federal benefit recipients, Federal agencies and Federal employees. The currently approved collection has been revised to exclude performance measurement surveys and program services evaluation surveys. Only those surveys relating specifically to customer satisfaction will be associated with OMB Control No. 3206–0236. We estimate 495,182 customer satisfaction surveys will be completed in the next 3 years. The time estimate varies from 2 minutes to 30 minutes to complete. The estimated burden is 34,152 hours.

U.S. Office of Personnel Management.

John Berry,

Director.

[FR Doc. 2010–14835 Filed 6–18–10; 8:45 am]

BILLING CODE 6325–47–P

OFFICE OF PERSONNEL MANAGEMENT

Civil Service Retirement System; Present Value Factors

AGENCY: Office of Personnel Management.

ACTION: Notice.

SUMMARY: The Office of Personnel Management (OPM) is providing notice of adjusted present value factors applicable to retirees under the Civil Service Retirement System (CSRS) who elect to provide survivor annuity benefits to a spouse based on post-retirement marriage and to retiring employees who elect the alternative form of annuity, owe certain redeposits based on refunds of contributions for service before October 1, 1990, or elect to credit certain service with nonappropriated fund instrumentalities.

This notice is necessary to conform the present value factors to changes in demographic factors adopted by the Board of Actuaries of the Civil Service Retirement System.

DATES: *Effective Date:* The revised present value factors apply to survivor reductions or employee annuities that commence on or after October 1, 2010.

ADDRESSES: Send requests for actuarial assumptions and data to the Board of Actuaries, care of Gregory Kissel, Actuary, Office of Planning and Policy Analysis, Office of Personnel Management, Room 4307, 1900 E Street, NW., Washington, DC 20415.

FOR FURTHER INFORMATION CONTACT: Kristine Prentice, (202) 606–0299.

SUPPLEMENTARY INFORMATION: Several provisions of CSRS require reduction of annuities on an actuarial basis. Under each of these provisions, OPM is required to issue regulations on the method of determining the reduction to ensure that the present value of the reduced annuity plus a lump-sum equals, to the extent practicable, the present value of the unreduced benefit. The regulations for each of these benefits provide that OPM will publish a notice in the **Federal Register** whenever it changes the factors used to compute the present values of these benefits.

Section 831.2205(a) of title 5, Code of Federal Regulations, prescribes the method for computing the reduction in the beginning rate of annuity payable to a retiree who elects an alternative form of annuity under 5 U.S.C. 8343a. That reduction is required to produce an annuity that is the actuarial equivalent of the annuity of a retiree who does not elect an alternative form of annuity. The present value factors listed below are used to compute the annuity reduction under section 831.2205(a) of title 5, Code of Federal Regulations.

Section 831.303(c) of title 5, Code of Federal Regulations, prescribes the use of these factors for computing the reduction to complete payment of certain redeposits of refunded deductions based on periods of service that ended before October 1, 1990, under section 8334(d)(2) of title 5, United States Code.

Section 831.663 of title 5, Code of Federal Regulations, prescribes the use of similar factors for computing the reduction required for certain elections to provide survivor annuity benefits based on a post-retirement marriage under section 8339(j)(5)(C) or (k)(2) of title 5, United States Code. Under section 11004 of the Omnibus Budget Reconciliation Act of 1993, Public Law 103–66, effective October 1, 1993, OPM ceased collection of these survivor election deposits by means of either a lump-sum payment or installments. Instead, OPM is required to establish a permanent actuarial reduction in the annuity of the retiree. This means that OPM must take the amount of the deposit computed under the old law and translate it into a lifetime reduction in the retiree's benefit. The reduction is based on actuarial tables, similar to those used for alternative forms of annuity under section 8343a of title 5, United States Code.

Subpart F of part 847 of title 5, Code of Federal Regulations, prescribes the use of similar factors for computing the deficiency the retiree must pay to receive credit for certain service with nonappropriated fund instrumentalities made creditable by an election under section 1043 of Public Law 104–106.

The present value factors currently in effect were published by OPM (72 FR 31628) on June 7, 2007. Elsewhere in today's **Federal Register**, OPM published a notice to revise the normal cost percentage under the Federal Employees' Retirement System (FERS) Act of 1986, Public Law 99–335, based on changed demographic factors adopted by the Board of Actuaries of the CSRS. Those changes require corresponding changes in CSRS normal costs and present value factors used to produce actuarially equivalent benefits when required by the Civil Service Retirement Act. The revised factors will become effective on October 1, 2010, to correspond with the changes in CSRS normal cost percentages. For alternative forms of annuity and redeposits of employee contributions, the new factors will apply to annuities that commence on or after October 1, 2010. *See* 5 CFR 831.2205 and 831.303(c). For survivor election deposits, the new factors will apply to survivor reductions that commence on or after October 1, 2010. See 5 CFR 831.663(c) and (d). For obtaining credit for service with certain nonappropriated fund instrumentalities, the new factors will apply to cases in which the date of computation under section 847.603 of title 5, Code of Federal Regulations, is on or after October 1, 2010. *See* 5 CFR 847.602(c) and 847.603.

OPM is, therefore, revising the tables of present value factors to read as follows:

CSRS PRESENT VALUE FACTORS APPLICABLE TO ANNUITY PAYABLE FOLLOWING AN ELECTION UNDER SECTION 8339(J) OR (K) OR SECTION 8343A OF TITLE 5, UNITED STATES CODE, OR UNDER SECTION 1043 OF PUBLIC LAW 104–106 OR FOLLOWING A REDEPOSIT UNDER SECTION 8334(D)(2) OF TITLE 5, UNITED STATES CODE

Age	Present value factor
40	290.4
41	288.1
42	285.4
43	282.1
44	278.3
45	274.2
46	270.1
47	266.0
48	262.0
49	257.6
50	253.1
51	248.9
52	244.7
53	240.2
54	235.3
55	230.4
56	225.3
57	220.1
58	214.9
59	209.7
60	204.3
61	198.9
62	193.2
63	187.5
64	181.8
65	176.0
66	170.2
67	164.4
68	158.7
69	152.9
70	147.2
71	141.4
72	135.5
73	129.5
74	123.7
75	118.0
76	112.3
77	106.8
78	101.0
79	95.3
80	89.9
81	84.4
82	78.9
83	73.7
84	69.4
85	64.6
86	59.4
87	54.6
88	50.9
89	47.7
90	44.1

CSRS PRESENT VALUE FACTORS APPLICABLE TO ANNUITY PAYABLE FOLLOWING AN ELECTION UNDER SECTION 1043 OF PUBLIC LAW 104–106 (FOR AGES AT CALCULATION BELOW 40)

Age at calculation	Present value of a monthly annuity
17	338.2
18	336.7
19	335.0
20	333.4
21	331.7
22	329.9
23	328.1
24	326.2
25	324.3
26	322.3
27	320.3
28	318.1
29	316.0
30	313.7
31	311.5
32	309.1
33	306.6
34	304.1
35	301.4
36	298.7
37	296.0
38	293.2
39	291.2

U.S. Office of Personnel Management.

John Berry,

Director.

[FR Doc. 2010–14832 Filed 6–18–10; 8:45 am]

BILLING CODE 6325–39–P

OFFICE OF PERSONNEL MANAGEMENT

Excepted Service

AGENCY: Office of Personnel Management (OPM).

ACTION: Notice.

SUMMARY: This gives notice of OPM decisions granting authority to make appointments under Schedules A, B, and C in the excepted service as required by 5 CFR 213.103.

FOR FURTHER INFORMATION CONTACT: Roland Edwards, Senior Executive Resource Services, Employee Services, 202–606–2246.

SUPPLEMENTARY INFORMATION: Appearing in the listing below are the individual authorities established under Schedules A, B, and C between May 1, 2010, and May 31, 2010. These notices are published monthly in the **Federal Register** at *http://www.gpoaccess.gov/fr/*. A consolidated listing of all authorities as of June 30 is also published each year. The following Schedules are not codified in the Code of Federal Regulations. These are agency-specific exceptions.

Schedule A

The following Schedule A authorities to report during May 2010.

Section 213.3106(b) Department of Defense.

(11) Not to exceed 3000 positions that require unique cyber security skills and knowledge to perform cyber risk and strategic analysis, incident handling and malware/vulnerability analysis, program management, distributed control systems security, cyber incident response, cyber exercise facilitation and management, cyber vulnerability detection and assessment, network and systems engineering, enterprise architecture, intelligence analysis, investigation, investigative analysis and cyber-related infrastructure interdependency analysis. This authority may be used to make permanent, time-limited and temporary appointments in the following occupational series: Security (GS–0080), intelligence analysts (GS–0132), computer engineers (GS–0854), electronic engineers (GS–0855), computer scientists (GS–1550), operations research (GS–1515), criminal investigators (GS–1811), telecommunications (GS–0391), and IT specialists (GS–2210). Within the scope of this authority, the U.S. Cyber Command is also authorized to hire miscellaneous administrative and program (GS–0301) series when those positions require unique cyber security skills and knowledge. All positions will be at the General Schedule (GS) grade levels 09–15 or equivalent. No new appointments may be made under this authority after December 31, 2012.

Section 213.3103 Executive Office of the President.

(i) Office of National Drug Control Policy.

(1) Not to exceed 18 positions, GS–15 and below, of senior policy analysts and other personnel with expertise in drug related issues and/or technical knowledge to aid in anti-drug abuse efforts.

Schedule B

No Schedule B authorities to report during May 2010.

Schedule C

The following Schedule C appointments were approved during May 2010.

Office of Management and Budget

BOGS10017 Special Assistant to the Executive Associate Director. Effective May 4, 2010.

BOGS10018 Confidential Assistant to the Associate Director for General Government Programs. Effective May 7, 2010.

BOGS10019 Confidential Assistant to the Associate Director for National Security Programs. Effective May 7, 2010.

BOGS10020 Press Secretary, Management to the Associate Director, Strategic Planning and Communications. Effective May 19, 2010.

Department of State

DSGS70106 Senior Policy Advisor to the Secretary on Innovation. Effective May 25, 2010.

Department of Treasury

DYGS00526 Speechwriter to the Chief of Staff. Effective May 14, 2010.

DYGS00527 Senior Advisor to the Chief of Staff. Effective May 14, 2010.

DYGS00528 Media Affairs Specialist to the Deputy Assistant Secretary (Public Affairs). Effective May 21, 2010.

Department of Defense

DDGS17279 Defense Fellows for White House Liaison. Effective May 3, 2010.

DDGS17281 Defense Fellows for White House Liaison. Effective May 3, 2010.

DDGS17283 Protocol Officer to the Secretary of Defense for Protocol. Effective May 10, 2010.

DDGS17282 Special Assistant of Defense Public Affairs. Effective May 13, 2010.

DDGS17280 Defense Fellow for White House Liaison. Effective May 21, 2010.

DDGS17284 Special Assistant for Research of Defense Public Affairs. Effective May 26, 2010.

Department of the Army

DWGS10100 Special Assistant of the Army (Installations and Environment). Effective May 4, 2010.

Department of Navy

DNGS10852 Special Assistant of the Navy for Business Operations and Transformation. Effective May 19, 2010.

Department of Justice

DJGS00603 Policy Advisor to the Assistant Attorney General, Office of Justice Programs. Effective May 4, 2010.

DJGS00606 Senior Counsel to the Deputy Attorney General. Effective May 4, 2010.

DJGS00607 Press Assistant to the Director, Office of Public Affairs. Effective May 7, 2010.
DJGS00608 Counsel to the Assistant Attorney General. Effective May 13, 2010.

Department of Homeland Security

DMGS00793 Press Secretary of External Affairs and Communications. Effective May 13, 2010.
DMGS00397 Special Assistant to the Chief Human Capital Officer. Effective May 17, 2010.
DMGS00669 Director of Legislative Affairs for Intelligence and Analysis. Effective May 17, 2010.

Department of the Interior

DIGS01183 Director, Office of Youth in Natural Resources to the Assistant Secretary Policy Management and Budget. Effective May 5, 2010.
DIGS01184 Deputy White House Liaison. Effective May 5, 2010.

Department of Agriculture

DAGS60603 Special Assistant for Marketing and Regulatory Programs. Effective May 7, 2010.
DAGS00191 Special Assistant for Congressional Relations. Effective May 20, 2010.
DAGS60604 Special Assistant to the Administrator. Effective May 21, 2010.

Department of Commerce

DCGS60596 Confidential Assistant to the Director of Public Affairs. Effective May 5, 2010.
DCGS00573 Special Assistant to the Director, Advocacy Center. Effective May 10, 2010.
DCGS00673 Special Assistant to the Deputy Assistant Secretary for Services. Effective May 10, 2010.
DCGS00183 Special Advisor for Communications and Information. Effective May 20, 2010.
DCGS60440 Special Assistant for White House Initiatives to the Director, Office of White House Liaison. Effective May 20, 2010.
DCGS00409 Policy and Congressional Affairs Specialist for National Telecommunications and Information Administration. Effective May 26, 2010.

Department of Labor

DLGS60112 Regional Representative for Congressional and Intergovernmental Affairs. Effective May 7, 2010.
DLGS60111 Regional Representative for Congressional and Intergovernmental Affairs. Effective May 19, 2010.

Department of Health and Human Services

DHGS60540 Confidential Assistant, Health. Effective May 3, 2010.
DHGS60113 Press Secretary (Health Reform) for Public Affairs. Effective May 6, 2010.
DHGS60114 Press Secretary (Health Reform) for Public Affairs. Effective May 6, 2010.
DHGS60678 Special Assistant to the Principal Deputy Administrator, Center for Medicare and Medicaid Services. Effective May 10, 2010.
DHGS60115 Surrogate Scheduler (Health Reform) for Public Affairs. Effective May 13, 2010.
DHGS60027 Deputy Director to the Director of Scheduling and Advance. Effective May 21, 2010.
DHGS60059 Deputy Director for Regional Outreach of Intergovernmental Affairs. Effective May 21, 2010.
DHGS60471 Director of Public Health Policy (Office of Health Reform) for Planning and Evaluation. Effective May 21, 2010.

Department of Education

DBGS00200 Special Assistant for Elementary and Secondary Education. Effective May 10, 2010.
DBGS00666 Director, White House Initiative on Tribal Colleges and Universities to the Under Secretary. Effective May 14, 2010.
DBGS00265 Special Assistant for Strategy. Effective May 19, 2010.
DBGS00562 Confidential Assistant to the Director, Scheduling and Advance Staff. Effective May 21, 2010.
DBGS00580 Deputy Assistant Secretary for Policy and Program Coordination for Elementary and Secondary Education. Effective May 27, 2010.
DBGS00638 Confidential Assistant to the Director, Intergovernmental Affairs. Effective May 27, 2010.

Department of Energy

DEGS00812 Congressional Affairs Specialist to the Director, Office of Congressional Affairs. Effective May 3, 2010.
DEGS00813 Senior Advisor, Loan Guarantee Program Office. Effective May 4, 2010.
DEGS00801 Special Assistant, Office of the American Recovery and Reinvestment Act. Effective May 7, 2010.
DEGS00814 Director, Office of Scheduling and Advance to the Chief of Staff. Effective May 13, 2010.

Small Business Administration

SBGS00708 Senior Advisor to the Associate Administrator for Investment. Effective May 5, 2010.
SBGS00706 Senior Policy Analyst to the Deputy Chief of Staff. Effective May 7, 2010.
SBGS00552 Assistant Administrator for Congressional and Legislative Affairs. Effective May 13, 2010.
SBGS00586 Special Assistant to the Deputy Administrator. Effective May 20, 2010.

General Services Administration

GSGS01441 Special Assistant to the Regional Administrator. Effective May 11, 2010.

Authority: 5 U.S.C. 3301 and 3302; E.O. 10577, 3 CFR 1954–1958 Comp., p. 218.

Office of Personnel Management.

John Berry,

Director.

[FR Doc. 2010–14826 Filed 6–18–10; 8:45 am]

BILLING CODE 6325–39–P

OFFICE OF PERSONNEL MANAGEMENT

Federal Employees' Retirement System; Present Value Factors

AGENCY: Office of Personnel Management.

ACTION: Notice.

SUMMARY: The Office of Personnel Management (OPM) is providing notice of adjusted present value factors applicable to retirees who elect to provide survivor annuity benefits to a spouse based on post-retirement marriage, and to retiring employees who elect the alternative form of annuity or elect to credit certain service with nonappropriated fund instrumentalities. This notice is necessary to conform the present value factors to changes in demographic factors adopted by the Board of Actuaries of the Civil Service Retirement System.

DATES: The revised present value factors apply to survivor reductions or employee annuities that commence on or after October 1, 2010.

ADDRESSES: Send requests for actuarial assumptions and data to the Board of Actuaries, care of Gregory Kissel, Actuary, Office of Planning and Policy Analysis, Office of Personnel Management, Room 4307, 1900 E Street, NW., Washington, DC 20415.

FOR FURTHER INFORMATION CONTACT: Kristine Prentice, (202) 606–0299.

SUPPLEMENTARY INFORMATION: Several provisions of the Federal Employees' Retirement System (FERS) require

reduction of annuities on an actuarial basis. Under each of these provisions, OPM is required to issue regulations on the method of determining the reduction to ensure that the present value of the reduced annuity plus a lump-sum equals, to the extent practicable, the present value of the unreduced benefit. The regulations for each of these benefits provide that OPM will publish a notice in the **Federal Register** whenever it changes the factors used to compute the present values of these benefits.

Section 842.706(a) of title 5, Code of Federal Regulations, prescribes the method for computing the reduction in the beginning rate of annuity payable to a retiree who elects an alternative form of annuity under 5 U.S.C. 8420a. That reduction is required to produce an annuity that is the actuarial equivalent of the annuity of a retiree who does not elect an alternative form of annuity. The present value factors listed below are used to compute the annuity reduction under 5 CFR 842.706(a).

Section 842.615 of title 5, Code of Federal Regulations, prescribes the use of these factors for computing the reduction required for certain elections to provide survivor annuity benefits based on a post-retirement marriage or divorce under 5 U.S.C. 8416(b), 8416(c), or 8417(b). Under section 11004 of the Omnibus Budget Reconciliation Act of 1993, Public Law 103–66, 107 Stat. 312, effective October 1, 1993, OPM ceased collection of these survivor election deposits by means of either a lump-sum payment or installments. Instead, OPM is required to establish a permanent actuarial reduction in the annuity of the retiree. This means that OPM must take the amount of the deposit computed under the old law and translate it into a lifetime reduction in the retiree's benefit. The reduction is based on actuarial tables, similar to those used for alternative forms of annuity under section 8420a of title 5, United States Code.

Subpart F of part 847 of title 5, Code of Federal Regulations, prescribes the use of present value factors for computing the deficiency the retiree must pay to receive credit for certain service with nonappropriated fund instrumentalities made creditable by an election under section 1043 of Public Law 104–106, 110 Stat. 186.

OPM published the present value factors currently in effect on June 7, 2007, at 72 FR 31629. Elsewhere in today's **Federal Register**, OPM published a notice to revise the normal cost percentage under the Federal Employees' Retirement System (FERS) Act of 1986, Public Law 99–335, 100 Stat. 514, based on changed demographic factors adopted by the Board of Actuaries of the Civil Service Retirement System. Under 5 U.S.C. 8461(i), those changes require corresponding changes in the present value factors used to produce actuarially equivalent benefits when required by the FERS Act. The revised factors will become effective on October 1, 2010, to correspond with the changes in FERS normal cost percentages. For alternative forms of annuity, the new factors will apply to annuities that commence on or after October 1, 2010. *See* 5 CFR 842.706. For survivor election deposits, the new factors will apply to survivor reductions that commence on or after October 1, 2010. *See* 5 CFR 842.615(b). For obtaining credit for service with certain nonappropriated fund instrumentalities, the new factors will apply to cases in which the date of computation under 5 CFR 847.603 is on or after October 1, 2010. *See* 5 CFR 847.602(c) and 847.603.

OPM is, therefore, revising the tables of present value factors to read as follows:

TABLE I—FERS PRESENT VALUE FACTORS FOR AGES 62 AND OLDER

[Applicable to annuity payable following an election under 5 U.S.C. 8416(b), 8416(c), 8417(b), or 8420a, or under section 1043 of Public Law 104–106]

Age	Present value factor
62	180.1
63	175.2
64	170.2
65	165.1
66	160.0
67	154.9
68	149.8
69	144.7
70	139.5
71	134.3
72	129.0
73	123.6
74	118.3
75	113.0
76	107.8
77	102.7
78	97.3
79	92.0
80	86.9
81	81.9
82	76.6
83	71.7
84	67.6
85	63.1
86	58.1
87	53.5
88	49.9
89	46.8
90	43.3

TABLE II.A—FERS PRESENT VALUE FACTORS FOR AGES 40 THROUGH 61

[Applicable to annuity payable when annuity is not increased by cost-of-living adjustments before age 62 following an election under 5 U.S.C. §§§ 8416(b), 8416(c), 8417(b), or § 8420a, or under section 1043 of Public Law 104–106]

Age	Present value factor
40	185.8
41	186.1
42	186.2
43	186.3
44	186.1
45	185.7
46	185.4
47	185.1
48	185.0
49	184.6
50	184.3
51	184.2
52	184.1
53	184.0
54	183.7
55	183.4
56	183.1
57	182.9
58	182.7
59	182.6
60	182.6
61	182.6

TABLE II.B—FERS PRESENT VALUE FACTORS FOR AGES 40 THROUGH 61

[Applicable to annuity payable when annuity is increased by cost-of-living adjustments before age 62 following an election under 5 U.S.C. 8416(b), 8416 (c), 8417(b), or 8420a, or under section 1043 of Public Law 104–106]

Age	Present value factor
40	256.6
41	254.3
42	251.8
43	249.2
44	246.6
45	243.9
46	241.1
47	238.1
48	235.1
49	231.9
50	228.6
51	225.2
52	221.6
53	217.9
54	214.0
55	210.0
56	205.9
57	201.5
58	197.1
59	192.5
60	187.9
61	183.1

TABLE III—FERS PRESENT VALUE FACTORS FOR AGES AT CALCULATION BELOW 40

[Applicable to annuity payable following an election under section 1043 of Public Law 104–106]

Age at calculation	Present value of a monthly annuity
17	292.3
18	291.4
19	290.3
20	289.3
21	288.1
22	286.9
23	285.7
24	284.5
25	283.1
26	281.8
27	280.4
28	279.0
29	277.5
30	275.9
31	274.3
32	272.6
33	270.9
34	269.0
35	267.1
36	265.2
37	263.2
38	261.1
39	258.9

U.S. Office of Personnel Management.

John Berry,

Director.

[FR Doc. 2010–14830 Filed 6–18–10; 8:45 am]

BILLING CODE 6325–39–P

OFFICE OF PERSONNEL MANAGEMENT

Federal Employees' Retirement System; Normal Cost Percentages

AGENCY: Office of Personnel Management.

ACTION: Notice.

SUMMARY: The Office of Personnel Management (OPM) is providing notice of revised normal cost percentages for employees covered by the Federal Employees' Retirement System (FERS) Act of 1986.

DATES: The revised normal cost percentages are effective at the beginning of the first pay period commencing on or after October 1, 2010. Agency appeals of the normal cost percentages must be filed no later than December 21, 2010.

ADDRESSES: Send or deliver agency appeals of the normal cost percentages and requests for actuarial assumptions and data to the Board of Actuaries, care of Gregory Kissel, Actuary, Office of Planning and Policy Analysis, Office of Personnel Management, Room 4307, 1900 E Street, NW., Washington, DC 20415.

FOR FURTHER INFORMATION CONTACT: Christopher Ziebarth, (202) 606–0299.

SUPPLEMENTARY INFORMATION: The FERS Act of 1986, Public Law 99–335, created a new retirement system intended to cover most Federal employees hired after 1983. Most Federal employees hired before 1984 are under the older Civil Service Retirement System (CSRS). Section 8423 of title 5, United States Code, as added by the FERS Act of 1986, provides for the payment of the Government's share of the cost of the retirement system under FERS. Employees' contributions are established by law and constitute only a small fraction of the cost of funding the retirement system; employing agencies are required to pay the remaining costs. The amount of funding required, known as "normal cost," is the entry age normal cost of the provisions of FERS that relate to the Civil Service Retirement and Disability Fund (Fund). The normal cost must be computed by OPM in accordance with generally accepted actuarial practices and standards (using dynamic assumptions). Subpart D of part 841 of title 5, Code of Federal Regulations, regulates how normal costs are determined.

Recently, the Board of Actuaries of the Civil Service Retirement System concluded that there should be no change to the set of economic assumptions used in the dynamic actuarial valuations of FERS. The Board reviewed statistical data prepared by the OPM actuaries and considered trends that may affect future experience under the System.

Based on its analysis, the Board concluded that it would be appropriate to assume a rate of investment return of 6.25 percent, with no difference from the existing rate of 6.25 percent. In addition, the Board anticipated a continued inflation rate of 3.50 percent, and a continued projected rate of General Schedule salary increases at 4.25 percent. These salary increases are in addition to assumed within-grade increases that reflect past experience. The economic assumptions anticipate that, over the long term, the annual rate of investment return will exceed inflation by 2.75 percent and General Schedule salary increases will exceed long-term inflation by .75 percent a year, with no difference from the current assumptions.

The Board adopted changes in the mortality assumptions as well as changes in all the demographic assumptions listed as factors under § 841.404(a) of title 5, Code of Federal Regulations. In addition to the changes in mortality assumptions, the Board found that recent statutory changes, most significantly sections 1901 and 1904 of the National Defense Authorization Act for Fiscal Year 2010, Pubic Law 111–84, 123 Stat. 2109, and a recent decision of the U.S. Court of Appeals for the Federal Circuit, *Adkins* v. *Office of Personnel Management,* 525 F.3d 1363 (Fed. Cir. 2008), require increases in the normal costs.

The normal cost calculations depend on economic, demographic, and mortality assumptions. The demographic assumptions are determined separately for each of a number of special groups, in cases where separate experience data is available. Based on the changes in the demographic assumptions, the economic assumptions, and the other factors described above, OPM has determined the normal cost percentage for each category of employees under § 841.403 of title 5, Code of Federal Regulations. The Governmentwide normal cost percentages, including the employee contributions, are as follows:

Members	19.2%
Congressional employees	17.7%
Law enforcement officers, members of the Supreme Court Police, firefighters, nuclear materials couriers, Customs and Border Protection Officers, and employees under section 302 of the Central Intelligence Agency Retirement Act of 1964 for Certain Employees	27.0%
Air traffic controllers	26.8%
Military reserve technicians	15.3%
Employees under section 303 of the Central Intelligence Agency Retirement Act of 1964 for Certain Employees (when serving abroad)	17.6%
All other employees	12.5%

Under § 841.408 of title 5, Code of Federal Regulations, these normal cost percentages are effective at the beginning of the first pay period commencing on or after October 1, 2010.

The time limit and address for filing agency appeals under §§ 841.409 through 841.412 of title 5, Code of Federal Regulations, are stated in the **DATES** and **ADDRESSES** sections of this notice.

U.S. Office of Personnel Management.

John Berry,

Director.

[FR Doc. 2010–14827 Filed 6–18–10; 8:45 am]

BILLING CODE 6325–39–P

OFFICE OF PERSONNEL MANAGEMENT

Privacy Act of 1974: Update and Amend System of Records

AGENCY: U.S. Office of Personnel Management (OPM).

ACTION: Update and amend OPM/GOVT–10, Employee Medical File System Records.

SUMMARY: OPM proposes to update and amend OPM/GOVT–10, Employee Medical File System Records contained in its inventory of record systems subject to the Privacy Act of 1974 (5 U.S.C. 552a), as amended. This action is necessary to meet the requirements of the Privacy Act to publish in the **Federal Register** notice of the existence and character, as well as any new use or intended new use of records maintained by the agency. 5 U.S.C. 552a(e)(4) and (11).

DATES: These changes will become effective without further notice forty (40) calendar days from the date of this publication, unless we receive comments that result in a contrary determination.

ADDRESSES: Send written comments to the Group Manager, Employee Services, Resources Management Group, 1900 E Street, NW., Room 7305, Washington, DC 20415.

FOR FURTHER INFORMATION CONTACT: Willie Powers, Group Manager, *willie.powers@opm.gov.*

SUPPLEMENTARY INFORMATION: The Office of Personnel Management's (OPM) system of record notices subject to the Privacy Act of 1974 (5 U.S.C. 552a), as amended, have been published in the **Federal Register**. The proposed changes include an addition of a new category of record, (f), to reflect records resulting from participation in agency-sponsored health promotion and wellness activities; an amendment to NOTE 2, under categories of records in the system, to include participation in an agency-sponsored health and wellness program; an addition of two new purposes—(l) to facilitate communication among members of an on-site health and wellness program and to the individual employee participating in the program, and (m) to enable evaluation of the effectiveness of on-site health and wellness programs. We have also proposed an update to routine use (m) to include other agencies or contractors acting on behalf of the agency, the removal of routine use (x) due to duplication of routine use (q), and an addition of a new routine use (x) to evaluate and report on the effectiveness of health and wellness programs. We are providing advance notice of these amendments to Congress and OMB, as required by subsection (r) of the Privacy Act of 1974 (5 U.S.C. 552a), as amended.

John Berry,

Director, U.S. Office of Personnel Management.

OPM/GOVT–10

System Name:

Employee Medical File System Records

SYSTEM LOCATION:

a. For current employees, records are located in agency medical, personnel, dispensary, health, safety, or other designated offices within the agency, or contractors performing a medical function for the agency.

b. For former employees, most records will be located in an Employee Medical Folder (EMF) stored at the National Personnel Records Center operated by the National Archives and Records Administration (NARA). In some cases, agencies may retain for a limited time (*e.g.,* up to 3 years) some records on former employees.

Note 1: The records in this system of records are "owned" by the Office of Personnel Management (OPM) and should be provided to those OPM employees who have an official need or use for those records. Therefore, if an employing agency is asked by an OPM employee to access the records within this system, such a request should be honored.

CATEGORIES OF INDIVIDUALS COVERED BY THE SYSTEM:

Current and former Federal civilian employees as defined in 5 U.S.C. 2105.

CATEGORIES OF RECORDS IN THE SYSTEM:

Records maintained in this system include:

a. Medical records, forms, and reports completed or obtained when an individual applies for a Federal job and is subsequently employed;

b. Medical records, forms, and reports completed during employment as a condition of employment, either by the employing agency or by another agency, State or local government entity, or a private sector entity under contract to the employing agency;

c. Records pertaining and resulting from the testing of the employee for use of illegal drugs under Executive Order 12564. Such records may be retained by the agency (*e.g.,* by the agency Medical Review Official) or by a contractor laboratory. This includes records of negative results, confirmed or unconfirmed positive test results, and documents related to the reasons for testing or other aspects of test results.

d. Reports of on-the-job injuries and medical records, forms, and reports generated as a result of the filing of a claim for Workers' Compensation, whether the claim is accepted or not. (The official compensation claim file is not covered by this system; rather, it is part of the Department of Labor's Office of Workers' Compensation Program (OWCP) system of records.)

e. All other medical records, forms, and reports created on an employee during his/her period of employment, including any retained on a temporary basis (*e.g.,* those designated to be retained only during the period of service with a given agency) and those designated for long-term retention (*i.e.,* those retained for the entire duration of Federal service and for some period of time after).

f. Records resulting from participation in agency-sponsored health promotion and wellness activities, including health risk appraisals, biometric testing, health coaching, disease management, behavioral management, preventive services, fitness programs, and any other activities that could be considered part of a comprehensive worksite health and wellness program.

Note 2: Records maintained by an agency dispensary are included in this system only when they are the result of a condition of employment or related to an on-the-job occurrence or result from participation in an agency-sponsored health and wellness program.

Note 3: Records pertaining to employee drug or alcohol abuse counseling or treatment, and those pertaining to other employee counseling programs conducted under the Health Service Program established pursuant to 5 U.S.C. chapter 79, are not part of this system of records.

Note 4: Only Routine Use "u" identified for this system of records is applicable to records relating to drug testing under Executive Order 12564. Further, such records shall be disclosed only to a very limited number of officials within the agency, generally only to the agency Medical Review Official (MRO), the administrator of the agency Employee Assistance Program, and any supervisory or management official within the employee's agency having authority to take the adverse personnel action against the employee.

AUTHORITY FOR MAINTENANCE OF THE SYSTEM:

Executive Orders 12107, 12196, and 12564 and 5 U.S.C. chapters 11, 33, and 63.

PURPOSE(S):

Records in this system of records are maintained for a variety of purposes, which include the following:

a. To ensure that records required to be retained on a long-term basis to meet the mandates of law, Executive Order, or regulations (*e.g.,* the Department of Labor's Occupational Safety and Health Administration (OSHA) and OWCP regulations), are so maintained.

b. To provide data necessary for proper medical evaluations and diagnoses, to ensure that proper treatment is administered, and to maintain continuity of medical care.

c. To provide an accurate medical history of the total health care and medical treatment received by the individual as well as job and/or hazard exposure documentation and health monitoring in relation to health status and claims of the individual.

d. To enable the planning for further care of the patient.

e. To provide a record of communications among members of the health care team who contribute to the patient's care.

f. To provide a legal document describing the health care administered and any exposure incident.

g. To provide a method for evaluating quality of health care rendered and job-health-protection including engineering protection provided, protective equipment worn, workplace monitoring, and medical exam monitoring required by OSHA or by good practice.

h. To ensure that all relevant, necessary, accurate, and timely data are available to support any medically-related employment decisions affecting the subject of the records (e.g., in connection with fitness-for-duty and disability retirement decisions).

i. To document claims filed with and the decisions reached by the OWCP and the individual's possible reemployment rights under statutes governing that program.

j. To document employee's reporting of on-the-job injuries or unhealthy or unsafe working conditions, including the reporting of such conditions to OSHA and actions taken by that agency or by the employing agency.

k. To ensure proper and accurate operation of the agency's employee drug testing program under Executive Order 12564.

l. To facilitate communication among members of an on-site health and wellness program and to the individual employee participating in the program.

m. To enable evaluation of the effectiveness of on-site health and wellness programs.

ROUTINE USES OF RECORDS MAINTAINED IN THE SYSTEM, INCLUDING CATEGORIES OF USERS AND THE PURPOSE OF SUCH USES:

Note 5: With the exception of Routine Use "u," none of the other Routine Uses identified for this system of records are applicable to records relating to drug testing under Executive Order 12564. Further, such records shall be disclosed only to a very limited number of officials within the agency, generally only to the agency Medical Review Official (MRO), the administrator of the agency Employee Assistance Program, and the management official empowered to recommend or take adverse action affecting the individual. These records and information in these records may be used:

a. To disclose information to the Department of Labor, Department of Veterans Affairs, Social Security Administration, Federal Retirement Thrift Investment Board, or a national, State, or local social security type agency, when necessary to adjudicate a claim (filed by or on behalf of the individual) under a retirement, insurance, or health benefit program.

b. To disclose information to a Federal, State, or local agency to the extent necessary to comply with laws governing reporting of communicable disease.

c. To disclose information to another Federal agency, to a court, or a party in litigation before a court or in an administrative proceeding being conducted by a Federal agency when the Government is a party to the judicial or administrative proceeding.

d. To disclose information to the Department of Justice, or in a proceeding before a court, adjudicative body, other administrative body before which the agency is authorized to appear, when:

1. The agency, or any component thereof; or

2. Any employee of the agency in his or her official capacity; or

3. Any employee of the agency in his or her individual capacity where the Department of Justice or the agency has agreed to represent the employee; or

4. The United States, where the agency determines that litigation is likely to affect the agency or any of its components, is a party to litigation or has an interest in such litigation, and the use of such records by the Department of Justice or the agency is deemed by the agency to be relevant and necessary to the litigation, provided, however, that in each case it has been determined that the disclosure is compatible with the purpose for which the records were collected.

e. To disclose in response to a request for discovery or for appearance of a witness, information that is relevant to the subject matter involved in a pending judicial or administrative proceeding.

f. To disclose pertinent information to the appropriate Federal, State, or local agency responsible for investigating, prosecuting, enforcing, or implementing a statute, rule, regulation, or order when the disclosing agency becomes aware of an indication of a violation or potential violation of civil or criminal law or regulation.

g. To disclose information to the Office of Management and Budget at any stage in the legislative coordination and clearance process in connection with private relief legislation as set forth in OMB Circular No. A–19.

h. To disclose information to a congressional office from the record of an individual in response to an inquiry from the congressional office made at the request of that individual.

i. To disclose information to the Merit System Protection Board or the Office of the Special Counsel, the Federal Labor Relations Authority and its General Counsel, the Equal Employment Opportunity Commission, arbitrators, and hearing examiners to the extent necessary to carry out their authorized duties.

j. To disclose information to survey team members from the Joint Commission on Accreditation of Hospitals (JCAH) when requested in connection with an accreditation review, but only to the extent that the information is relevant and necessary to meet the JCAH standards.

k. To disclose information to the National Archives and Records Administration in records management inspections and its role as Archivist.

l. To disclose information to health insurance carriers contracting with the Office to provide a health benefits plan under the Federal Employees Health Benefits Program information necessary to verify eligibility for payment of a claim for health benefits.

m. By the agency maintaining or responsible for generating the records (or third parties under contract with the agency) to locate individuals for health research or survey response and in the production of summary descriptive statistics and analytical studies (*e.g.,* epidemiological studies) in support of the function for which the records are collected and maintained. While published statistics and studies do not contain individual identifiers, in some instances the selection of elements of data included in the study might be structured in such a way as to make the data individually identifiable by inference.

n. To disclose information to the Office of Federal Employees Group Life Insurance or Federal Retirement Thrift Investment Board that is relevant and necessary to adjudicate claims.

o. To disclose information, when an individual to whom a record pertains is mentally incompetent or under other legal disability, to any person who is responsible for the care of the individual, to the extent necessary.

p. To disclose to the agency-appointed representative of an employee, all notices, determinations, decisions, or other written communications issued to the employee, in connection with an examination ordered by the agency under medical evaluation (formerly Fitness for Duty) examinations procedures.

q. To disclose to a requesting agency, organization, or individual the home address and other information concerning those individuals who it is reasonably believed might have contracted an illness or been exposed to or suffered from a health hazard while employed in the Federal workforce.

r. To disclose information to a Federal agency, in response to its request or at the initiation of the agency maintaining the records, in connection with the retention of an employee, the issuance of a security clearance, the conducting of a suitability or security investigation of an individual, the classifying of jobs, the letting of a contract, or the issuance of a license, grant, or other benefit by the requesting agency, or the lawful, statutory, administrative, or investigative purpose of the agency, to the extent that the information is relevant and necessary to the requesting agency's decision on the matter.

s. To disclose to any Federal, State, or local government agency, in response to its request or at the initiation of the agency maintaining the records, information relevant and necessary to the lawful, statutory, administrative, or investigatory purpose of that agency as it relates to the conduct of job related epidemiological research or the assurance of compliance with Federal, State, or local government laws on health and safety in the work environment.

t. To disclose to officials of labor organizations recognized under 5 U.S.C. chapter 71, analyses using exposure or medical records and employee exposure records, in accordance with the records access rules of the Department of Labor's OSHA, and subject to the limitations at 29 CFR 1910.20(e)(2)(iii)(B).

u. To disclose the results of a drug test of a Federal employee pursuant to an order of a court of competent jurisdiction where required by the United States Government to defend against any challenge against any adverse personnel action.

v. To disclose information to contractors, grantees, or volunteers performing or working on a contract, service, grant, cooperative agreement or job for the Federal Government.

w. To disclose records on former Panama Canal Commission employees to the Republic of Panama for use in employment matters.

x. To evaluate and report on the effectiveness of health and wellness programs by agency staff or third parties under contract with the agency to conduct such evaluations.

POLICIES AND PRACTICES FOR STORING, RETRIEVING, SAFEGUARDING, AND RETAINING AND DISPOSING OF RECORDS IN THE SYSTEM:

STORAGE:

Records are stored in file folders, on microfiche, in electronic record systems, and on file cards, x-rays, or other medical reports and forms.

RETRIEVABILITY:

Records are retrieved by the employee's name, date of birth, social security number, or any combination of those identifiers.

SAFEGUARDS:

Records are stored in locked file cabinets or locked rooms. Electronic records are protected by restricted access procedures and audit trails. Access to records is strictly limited to agency or contractor officials with a bona fide need for the records.

RETENTION AND DISPOSAL:

The EMF is maintained for the period of the employee's service in the agency and is then transferred to the National Personnel Records Center for storage, or as appropriate, to the next employing Federal agency. Other medical records are either retained at the agency for various lengths of time in accordance with the National Archives and Records Administration's records schedules or destroyed when they have served their purpose or when the employee leaves the agency. Within 90 days after the individual separates from the Federal service, the EMF is sent to the National Personnel Records Center for storage. Destruction of the EMF is in accordance with General Records Schedule-1(21). Records arising in connection with employee drug testing under Executive Order 12564 are generally retained for up to 3 years. Records are destroyed by shredding, burning, or by erasing the disk.

SYSTEM MANAGER(S) AND ADDRESS:

a. Group Manager, Employee Services, Resources Management Group, 1900 E Street, NW., Room 7305, Washington, DC 20415.

b. For current Federal employees, OPM has delegated to the employing agency the Privacy Act responsibilities concerning access, amendment, and disclosure of the records within this system notice.

NOTIFICATION PROCEDURE:

Individuals wishing to inquire whether this system of records contains records on them should follow the appropriate procedure listed below.

a. *Current Employees.* Current employees should contact their employing agency's personnel, dispensary, health, safety, medical, or other designated office responsible for maintaining the records, as identified in the agency's internal issuance covering this system. Individuals must furnish such identifying information as required by the agency for their records to be located and identified.

b. *Former employees.* Former employees should contact their former agency's personnel, dispensary, health, safety, medical, or other designated office responsible for maintaining the records, as identified in the agency's internal issuance covering this system.

Additionally, for access to their EMF, they should submit a request to the National Personnel Records Center (Civilian), 111 Winnebago Street, St. Louis, Missouri 63118.

RECORDS ACCESS PROCEDURE:

a. Current employees should contact the appropriate agency office as indicated in the Notification Procedure section and furnish such identifying information as required by the agency to locate and identify the records sought.

b. Former employees should contact the appropriate agency office as indicated in the Notification Procedure section and furnish such identifying information as required by the agency to locate and identify the records sought. Former employees may also submit a request to the National Personnel Records Center (Civilian), 111 Winnebago Street, St. Louis, Missouri 63118, for access to their EMF. When submitting a request to the National Personnel Records Center, the individual must furnish the following information to locate and identify the record sought:

1. Full name.
2. Date of birth.
3. Social security number.
4. Agency name, date, and location of last Federal service.
5. Signature.

c. Individuals requesting access must also comply with OPM's Privacy Act regulations on verification of identity and access to records (5 CFR part 297).

CONTESTING RECORDS PROCEDURE:

Because medical practitioners often provide differing, but equally valid medical judgments and opinions when making medical evaluations of an individual's health status, review of requests from individuals seeking amendment of their medical records, beyond correction and updating of the records, will be limited to consideration of including the differing opinion in the record rather than attempting to determine whether the original opinion is accurate. Individuals wishing to amend their records should:

a. For a current employee, contact the appropriate agency office identified in the Notification Procedure section and furnish such identifying information as required by the agency to locate and identify the records to be amended.

b. For a former employee, contact the appropriate agency office identified in the Notification Procedure section and furnish such identifying information as required by the agency to locate and identify the record to be amended. Former employees may also submit a request to amend records in their EMF to the system manager. When submitting a request to the system manager, the individual must furnish

the following information to locate and identify the records to be amended:

1. Full name.
2. Date of birth.
3. Social security number.
4. Agency name, date, and location of last Federal service.
5. Signature.

c. Individuals seeking amendment of their records must also follow the Office's Privacy Act regulations on verification of identity and amendment of records (5 CFR part 297).

RECORDS SOURCE CATEGORIES:

RECORDS IN THIS SYSTEM ARE OBTAINED FROM:

a. The individual to whom the records pertain.
b. Agency employee health unit staff.
c. Federal and private sector medical practitioners and treatment facilities.
d. Supervisors/managers and other agency officials.
e. Other agency records.

[FR Doc. 2010–14838 Filed 6–18–10; 8:45 am]

BILLING CODE 6325–46–P

POSTAL REGULATORY COMMISSION

[Docket Nos. CP2010–60 through CP2010–63; Order No. 472]

New Postal Products

AGENCY: Postal Regulatory Commission.

ACTION: Notice.

SUMMARY: The Commission is noticing a recently–filed Postal Service request to add new Global Expedited Package Services 2 products to the Competitive Product List. This notice addresses procedural steps associated with the filing.

DATES: Comments are due: June 22, 2010.

ADDRESSES: Submit comments electronically via the Commission's Filing Online system at *http://www.prc.gov*. Commenters who cannot submit their views electronically should contact the person identified in the **FOR FURTHER INFORMATION CONTACT** section by telephone for advice on alternatives to electronic filing.

FOR FURTHER INFORMATION CONTACT: Stephen L. Sharfman, General Counsel, at *stephen.sharfman@prc.gov*or 202–789–6820.

SUPPLEMENTARY INFORMATION:

Table of Contents

I. Introduction
II. Notice of Filing
III. Ordering Paragraphs

I. Introduction

On June 14, 2010, the Postal Service filed a notice announcing that it has entered into four additional Global Expedited Package Services 2 (GEPS 2) contracts.[1] The Postal Service believes the instant contracts are functionally equivalent to previously submitted GEPS 2 contracts, and are supported by Governors' Decision No. 08–7, attached to the Notice and originally filed in Docket No. CP2008–4. *Id.* at 1–2, Attachment 3. The Notice also explains that Order No. 86, which established GEPS 1 as a product, also authorized functionally equivalent agreements to be included within the product, provided that they meet the requirements of 39 U.S.C. 3633. *Id.* at 1. In Order No. 290, the Commission approved the GEPS 2 product.[2]

The instant contracts. The Postal Service filed the instant contracts pursuant to 39 CFR 3015.5. In addition, the Postal Service contends that each contract is in accordance with Order No. 86. The term of each contract is one year from the date the Postal Service notifies the customer that all necessary regulatory approvals have been received. Notice at 2–3.

In support of its Notice, the Postal Service filed four attachments as follows:

- Attachments 1A, 1B, 1C and 1D—redacted copies of the four contracts and applicable annexes;
- Attachments 2A, 2B, 2C and 2D—a certified statement required by 39 CFR 3015.5(c)(2) for each of the four contracts;
- Attachment 3—a redacted copy of Governors' Decision No. 08–7 which establishes prices and classifications for GEPS contracts, a description of applicable GEPS contracts, formulas for prices, an analysis and certification of the formulas and certification of the Governors' vote; and
- Attachment 4—an application for non–public treatment of materials to maintain redacted portions of the contracts and supporting documents under seal.

The Notice advances reasons why the instant GEPS 2 contracts fit within the Mail Classification Schedule language for GEPS 2. The Postal Service identifies customer–specific information, general contract terms, and other differences that distinguish the instant contracts from the baseline GEPS 2 agreement, all of which are highlighted in the Notice. *Id.* at 3–6. These modifications as described in the Postal Service's Notice apply to each of the instant contracts.

The Postal Service contends that the instant contracts are functionally equivalent to previously filed GEPS 2 contracts and are substantially similar to that in Docket No. CP2009–50 in terms of the product being offered, the market in which it is offered, and its cost characteristics. *Id.* at 2–3. The Postal Service states that "the relevant cost and market characteristics are similar, if not the same for these four contracts and the baseline GEPS contract." *Id.* at 6.

The Postal Service also contends that its filing demonstrates that each of the new GEPS 2 contracts complies with the requirements of 39 U.S.C. 3633. It requests that the contracts be included within the GEPS 2 product. *Id.* at 7.

II. Notice of Filing

The Commission establishes Docket Nos. CP2010–60, CP2010–61, CP2010–62 and CP2010–63 for consideration of matters related to the contracts identified in the Postal Service's Notice.

These dockets are addressed on a consolidated basis for purposes of this order. Filings with respect to a particular contract should be filed in that docket.

Interested persons may submit comments on whether the Postal Service's contracts are consistent with the policies of 39 U.S.C. 3632, 3633 or 3642. Comments are due no later than June 22, 2010. The public portions of these filings can be accessed via the Commission's Web site *(http://www.prc.gov).*

The Commission appoints Paul L. Harrington to serve as Public Representative in the captioned proceedings.

III. Ordering Paragraphs

It is ordered:

1. The Commission establishes Docket Nos. CP2010–60, CP2010–61, CP2010–62 and CP2010–63 for consideration of matters raised by the Postal Service's Notice.

2. Comments by interested persons in these proceedings are due no later than June 22, 2010.

3. Pursuant to 39 U.S.C. 505, Paul L. Harrington is appointed to serve as officer of the Commission (Public Representative) to represent the interests of the general public in these proceedings.

4. The Secretary shall arrange for publication of this order in the **Federal Register.**

[1] Notice of United States Postal Service Filing of Four Functionally Equivalent Global Expedited Package Services 2 Negotiated Service Agreements and Application for Non–Public Treatment of Materials Filed Under Seal, June 14, 2010 (Notice).

[2] Docket No. CP2009–50, Order Granting Clarification and Adding Global Expedited Package Services 2 to the Competitive Product List, August 28, 2009 (Order No. 290).

By the Commission.

Shoshana M. Grove,

Secretary.

[FR Doc. 2010–14831 Filed 6–18–10; 8:45 am]

BILLING CODE S

SMALL BUSINESS ADMINISTRATION

[Disaster Declaration #12159 and #12160]

Tennessee Disaster Number TN–00039

AGENCY: Small Business Administration.

ACTION: Amendment 7.

SUMMARY: This is an amendment of the Presidential declaration of a major disaster for the State of Tennessee (FEMA–1909–DR), dated 05/04/2010.

Incident: Severe Storms, Flooding, Straight-line Winds, and Tornadoes.

Incident Period: 04/30/2010 through 05/18/2010.

Effective Date: 06/11/2010.

Physical Loan Application Deadline Date: 07/06/2010.

EIDL Loan Application Deadline Date: 02/04/2011.

ADDRESSES: *Submit completed loan applications to:* U.S. Small Business Administration, Processing And Disbursement Center, 14925 Kingsport Road, Fort Worth, TX 76155.

FOR FURTHER INFORMATION CONTACT: A. Escobar, Office of Disaster Assistance, U.S. Small Business Administration, 409 3rd Street, SW., Suite 6050, Washington, DC 20416.

SUPPLEMENTARY INFORMATION: The notice of the Presidential disaster declaration for the State of Tennessee, dated 05/04/2010 is hereby amended to include the following areas as adversely affected by the disaster:

Primary Counties: (Physical Damage and Economic Injury Loans): Putnam.

Contiguous Counties: (Economic Injury Loans Only): Tennessee: Cumberland, Fentress.

All other information in the original declaration remains unchanged.

(Catalog of Federal Domestic Assistance Numbers 59002 and 59008)

James E. Rivera,

Associate Administrator for Disaster Assistance.

[FR Doc. 2010–14893 Filed 6–18–10; 8:45 am]

BILLING CODE 8025–01–P

SMALL BUSINESS ADMINISTRATION

[Disaster Declaration #12161 and #12162]

Tennessee Disaster Number TN–00038

AGENCY: Small Business Administration.

ACTION: Amendment 8.

SUMMARY: This is an amendment of the Presidential declaration of a major disaster for Public Assistance Only for the State of Tennessee (FEMA–1909–DR), dated 05/04/2010.

Incident: Severe Storms, Flooding, Straight-Line Winds and Tornadoes.

Incident Period: 04/30/2010 through 05/18/2010.

Effective Date: 06/11/2010.

Physical Loan Application Deadline Date: 07/06/2010.

Economic Injury (EIDL) *Loan Application Deadline Date:* 02/04/2011.

ADDRESSES: *Submit completed loan applications to:* U.S. Small Business Administration, Processing and Disbursement Center, 14925 Kingsport Road, Fort Worth, TX 76155.

FOR FURTHER INFORMATION CONTACT: A. Escobar, Office of Disaster Assistance, U.S. Small Business Administration, 409 3rd Street, SW., Suite 6050, Washington, DC 20416.

SUPPLEMENTARY INFORMATION: The notice of the President's major disaster declaration for Private Non-Profit organizations in the State of Tennessee, dated 05/04/2010, is hereby amended to include the following areas as adversely affected by the disaster.

Primary Counties: Putnam.

All other information in the original declaration remains unchanged.

(Catalog of Federal Domestic Assistance Numbers 59002 and 59008)

James E. Rivera,

Associate Administrator for Disaster Assistance.

[FR Doc. 2010–14896 Filed 6–18–10; 8:45 am]

BILLING CODE 8025–01–P

SMALL BUSINESS ADMINISTRATION

[Disaster Declaration #12064 and #12065]

West Virginia Disaster Number WV–00015

AGENCY: Small Business Administration.

ACTION: Amendment 1.

SUMMARY: This is an amendment of the Presidential declaration of a major disaster for Public Assistance Only for the State of West Virginia (FEMA–1881–DR), dated 03/02/2010.

Incident: Severe winter storm and snowstorm.

Incident Period: 12/18/2009 through 12/20/2009.

Effective Date: 06/10/2010.

Physical Loan Application Deadline Date: 05/03/2010.

Economic Injury (EIDL) Loan Application Deadline Date: 12/02/2010

ADDRESSES: *Submit completed loan applications to:* U.S. Small Business Administration, Processing and Disbursement Center, 14925 Kingsport Road, Fort Worth, TX 76155.

FOR FURTHER INFORMATION CONTACT: A. Escobar, Office of Disaster Assistance, U.S. Small Business Administration, 409 3rd Street, SW., Suite 6050, Washington, DC 20416.

SUPPLEMENTARY INFORMATION: The notice of the President's major disaster declaration for Private Non-Profit organizations in the State of West Virginia, dated 03/02/2010, is hereby amended to include the following areas as adversely affected by the disaster.

Primary Counties: Jefferson, Mercer, Randolph.

All other information in the original declaration remains unchanged.

(Catalog of Federal Domestic Assistance Numbers 59002 and 59008)

James E. Rivera,

Associate Administrator, for Disaster Assistance.

[FR Doc. 2010–14901 Filed 6–18–10; 8:45 am]

BILLING CODE 8025–01–P

SMALL BUSINESS ADMINISTRATION

[Disaster Declaration #12206 and #12207]

Oklahoma Disaster #OK–00040

AGENCY: Small Business Administration.

ACTION: Notice.

SUMMARY: This is a Notice of the Presidential declaration of a major disaster for Public Assistance Only for the State of Oklahoma (FEMA–1917–DR), dated 06/11/2010.

Incident: Severe storms, tornadoes, and straight-line winds.

Incident Period: 05/10/2010 through 05/13/2010.

Effective Date: 06/11/2010.

Physical Loan Application Deadline Date: 08/10/2010.

Economic Injury (EIDL) Loan Application Deadline Date: 03/11/2011.

ADDRESSES: *Submit completed loan applications to:* U.S. Small Business Administration, Processing and Disbursement Center, 14925 Kingsport Road, Fort Worth, TX 76155.

FOR FURTHER INFORMATION CONTACT: A. Escobar, Office of Disaster Assistance, U.S. Small Business Administration, 409 3rd Street, SW., Suite 6050, Washington, DC 20416.

SUPPLEMENTARY INFORMATION: Notice is hereby given that as a result of the President's major disaster declaration on 06/11/2010, Private Non-Profit

organizations that provide essential services of governmental nature may file disaster loan applications at the address listed above or other locally announced locations.

The following areas have been determined to be adversely affected by the disaster:

Primary Counties:

Alfalfa, Cleveland, Grant, Major, Mcintosh, Noble, Okfuskee, Osage, Pottawatomie, Seminole.

The Interest Rates are:

	Percent
For Physical Damage:	
Non-Profit Organizations With Credit Available Elsewhere:	3.625
Non-Profit Organizations Without Credit Available Elsewhere:	3.000
For Economic Injury:	
Non-Profit Organizations Without Credit Available Elsewhere:	3.000

The number assigned to this disaster for physical damage is 12206C and for economic injury is 12207C.

(Catalog of Federal Domestic Assistance Numbers 59002 and 59008)

James E. Rivera

Associate Administrator for Disaster Assistance.

[FR Doc. 2010–14903 Filed 6–18–10; 8:45 am]

BILLING CODE 8025–01–P

SMALL BUSINESS ADMINISTRATION

[Disaster Declaration #12136 and #12137]

Nebraska Disaster Number NE–00035

AGENCY: Small Business Administration.

ACTION: Amendment 1.

SUMMARY: This is an amendment of the Presidential declaration of a major disaster for Public Assistance Only for the State of Nebraska (FEMA–1902–DR), dated 04/21/2010.

Incident: Severe Storms, Ice Jams, and Flooding.

Incident Period: 03/06/2010 through 04/03/2010.

Effective Date: 06/10/2010.

Physical Loan Application Deadline Date: 06/21/2010.

Economic Injury (EIDL) Loan Application Deadline Date: 01/21/2011.

ADDRESSES: *Submit completed loan applications to:* U.S. Small Business Administration, Processing and Disbursement Center, 14925 Kingsport Road, Fort Worth, TX 76155.

FOR FURTHER INFORMATION CONTACT: A. Escobar, Office of Disaster Assistance, U.S. Small Business Administration, 409 3rd Street, SW., Suite 6050, Washington, DC 20416.

SUPPLEMENTARY INFORMATION: The notice of the President's major disaster declaration for Private Non-Profit organizations in the State of Nebraska, dated 04/21/2010, is hereby amended to include the following areas as adversely affected by the disaster.

Primary Counties: Sherman, Dixon.

All other information in the original declaration remains unchanged.

(Catalog of Federal Domestic Assistance Numbers 59002 and 59008)

James E. Rivera,

Associate Administrator for Disaster Assistance.

[FR Doc. 2010–14899 Filed 6–18–10; 8:45 am]

BILLING CODE 8025–01–P

SECURITIES AND EXCHANGE COMMISSION

Sunshine Act Meeting

FEDERAL REGISTER CITATION OF PREVIOUS ANNOUNCEMENT: 75 FR 34183, June 16, 2010.

STATUS: Open Meeting.

PLACE: 100 F Street, NE., Washington, DC.

DATE AND TIME OF PREVIOUSLY ANNOUNCED MEETING: Friday, June 18, 2010 at 10 a.m.

CHANGE IN THE MEETING: Cancellation of Meeting.

The Open Meeting scheduled for Friday, June 18, 2010 at 10 a.m. has been cancelled.

For further information please contact the Office of the Secretary at (202) 551–5400.

Dated: June 16, 2010.

Florence E. Harmon,

Deputy Secretary.

[FR Doc. 2010–15011 Filed 6–17–10; 11:15 am]

BILLING CODE P

SECURITIES AND EXCHANGE COMMISSION

[File No. 500–1]

In the Matter of Aphton Corp., Apollo International of Delaware, Inc., Applewoods, Inc., Applied Nanoscience, Inc., Aquacell Technologies, Inc. (n/k/a Greencore Technology, Inc.), Aquagenix, Inc., Aquapro Corp., Asconi Corp., Asia Electronics Holding Co., Inc., Asian Star Development, Inc., Associated Golf Management, Inc. (n/k/a Delta Mining & Exploration Corp.), Avalon Borden Companies, Inc., Avasoft, Inc., Aviation Holdings Group, Inc., and Azur Holdings, Inc.; Order of Suspension of Trading

June 17, 2010.

It appears to the Securities and Exchange Commission that there is a lack of current and accurate information concerning the securities of Aphton Corp. because it has not filed any periodic reports since the period ended December 31, 2005.

It appears to the Securities and Exchange Commission that there is a lack of current and accurate information concerning the securities of Apollo International of Delaware, Inc. because it has not filed any periodic reports since the period ended September 30, 1998.

It appears to the Securities and Exchange Commission that there is a lack of current and accurate information concerning the securities of Applewoods, Inc. because it has not filed any periodic reports since the period ended March 31, 1998.

It appears to the Securities and Exchange Commission that there is a lack of current and accurate information concerning the securities of Applied Nanoscience, Inc. because it has not filed any periodic reports since February 11, 2008.

It appears to the Securities and Exchange Commission that there is a lack of current and accurate information concerning the securities of Aquacell Technologies, Inc. (n/k/a Greencore Technology, Inc.) because it has not filed any periodic reports since the period ended June 30, 2008.

It appears to the Securities and Exchange Commission that there is a lack of current and accurate information concerning the securities of Aquagenix, Inc. because it has not filed any periodic reports since the period ended December 31, 1998.

It appears to the Securities and Exchange Commission that there is a lack of current and accurate information

concerning the securities of Aquapro Corp. because it has not filed any periodic reports since the period ended December 31, 2002.

It appears to the Securities and Exchange Commission that there is a lack of current and accurate information concerning the securities of Asconi Corp. because it has not filed any periodic reports since the period ended September 30, 2005.

It appears to the Securities and Exchange Commission that there is a lack of current and accurate information concerning the securities of Asia Electronics Holding Co., Inc. because it has not filed any periodic reports since the period ended December 31, 1997.

It appears to the Securities and Exchange Commission that there is a lack of current and accurate information concerning the securities of Asian Star Development, Inc. because it has not filed any periodic reports since the period ended September 30, 2002.

It appears to the Securities and Exchange Commission that there is a lack of current and accurate information concerning the securities of Associated Golf Management, Inc. (n/k/a Delta Mining & Exploration Corp.) because it has not filed any periodic reports since February 8, 2000.

It appears to the Securities and Exchange Commission that there is a lack of current and accurate information concerning the securities of Avalon Borden Companies, Inc. because it has not filed any periodic reports since the period ended November 30, 2000.

It appears to the Securities and Exchange Commission that there is a lack of current and accurate information concerning the securities of Avasoft, Inc. because it has not filed any periodic reports since the period ended September 30, 2007.

It appears to the Securities and Exchange Commission that there is a lack of current and accurate information concerning the securities of Aviation Holdings Group, Inc. because it has not filed any periodic reports since the period ended September 30, 2000.

It appears to the Securities and Exchange Commission that there is a lack of current and accurate information concerning the securities of Azur Holdings, Inc. because it has not filed any periodic reports since the period ended October 31, 2006.

The Commission is of the opinion that the public interest and the protection of investors require a suspension of trading in the securities of the above-listed companies.

Therefore, it is ordered, pursuant to Section 12(k) of the Securities Exchange Act of 1934, that trading in the securities of the above-listed companies is suspended for the period from 9:30 a.m. EDT on June 17, 2010, through 11:59 p.m. EDT on June 30, 2010.

By the Commission.

Jill M. Peterson,

Assistant Secretary.

[FR Doc. 2010–15040 Filed 6–17–10; 4:15 pm]

BILLING CODE 8010–01–P

SECURITIES AND EXCHANGE COMMISSION

[Release No. 34–62299; File No. SR–FINRA–2010–029]

Self-Regulatory Organizations; Financial Industry Regulatory Authority, Inc.; Notice of Filing of Proposed Rule Change To Adopt FINRA Rule 5141 (Sale of Securities in a Fixed Price Offering) in the Consolidated FINRA Rulebook

June 16, 2010.

Pursuant to Section 19(b)(1) of the Securities Exchange Act of 1934 ("Act") [1] and Rule 19b–4 thereunder,[2] notice is hereby given that on May 27, 2010, Financial Industry Regulatory Authority, Inc. ("FINRA") (f/k/a National Association of Securities Dealers, Inc. ("NASD")) filed with the Securities and Exchange Commission ("SEC" or "Commission") the proposed rule change as described in Items I, II, and III below, which Items have been substantially prepared by FINRA. The Commission is publishing this notice to solicit comments on the proposed rule change from interested persons.

I. Self-Regulatory Organization's Statement of the Terms of Substance of the Proposed Rule Change

FINRA is proposing to adopt FINRA Rule 5141 (Sale of Securities in a Fixed Price Offering) in the consolidated FINRA rulebook and to delete NASD Rules 0120(h), 2730, 2740 and 2750, and NASD IM–2730, IM–2740 and IM–2750.

The text of the proposed rule change is available on FINRA's Web site at *http://www.finra.org,* at the principal office of FINRA and at the Commission's Public Reference Room.

II. Self-Regulatory Organization's Statement of the Purpose of, and Statutory Basis for, the Proposed Rule Change

In its filing with the Commission, FINRA included statements concerning the purpose of and basis for the proposed rule change and discussed any comments it received on the proposed rule change. The text of these statements may be examined at the places specified in Item IV below. FINRA has prepared summaries, set forth in sections A, B, and C below, of the most significant aspects of such statements.

A. Self-Regulatory Organization's Statement of the Purpose of, and Statutory Basis for, the Proposed Rule Change

1. Purpose

As part of the process of developing a new consolidated rulebook ("Consolidated FINRA Rulebook"),[3] FINRA is proposing to adopt FINRA Rule 5141 (Sale of Securities in a Fixed Price Offering) in the consolidated FINRA rulebook and to delete NASD Rules 0120(h), 2730, 2740 and 2750, and NASD IM–2730, IM–2740 and IM–2750.

Proposed FINRA Rule 5141 is a new, consolidated rule intended to protect the integrity of fixed price offerings [4] by ensuring that securities in such offerings are sold to the public at the stated public offering price or prices, thereby preventing an undisclosed better price. The proposed rule is based in part on, and replaces, the current fixed price offering rules (NASD Rules 0120(h), 2730, 2740 and 2750 and associated Interpretive Materials ("IMs") 2730, 2740 and 2750).[5] Like the current fixed

---

[1] 15 U.S.C. 78s(b)(1).

[2] 17 CFR 240.19b–4.

[3] The current FINRA rulebook consists of: (1) FINRA Rules; (2) NASD Rules; and (3) rules incorporated from NYSE ("Incorporated NYSE Rules") (together, the NASD Rules and Incorporated NYSE Rules are referred to as the "Transitional Rulebook"). While the NASD Rules generally apply to all FINRA members, the Incorporated NYSE Rules apply only to those members of FINRA that are also members of the NYSE ("Dual Members"). The FINRA Rules apply to all FINRA members, unless such rules have a more limited application by their terms. For more information about the rulebook consolidation process, *see Information Notice,* March 12, 2008 (Rulebook Consolidation Process).

[4] NASD Rule 0120(h) defines the term "fixed price offering" to mean the offering of securities at a stated public offering price or prices, all or part of which securities are publicly offered in the United States or any territory thereof, whether or not registered under the Securities Act of 1933. The term does not include offerings of "exempted securities" or "municipal securities" as those terms are defined in Sections 3(a)(12) and 3(a)(29), respectively, of the Securities Exchange Act or offerings of redeemable securities of investment companies registered pursuant to the Investment Company Act of 1940 which are offered at prices determined by the net asset value of the securities. The proposed rule change would incorporate the definition of "fixed price offering" into the proposed rule in substantially identical form. *See* proposed FINRA Rule 5141.04. *See also* Section (B) under this Item and Section (C) under Item II.C.

[5] The current fixed price offering rules are also known as the *Papilsky* rules because of the court decision with which they are commonly associated. *See Papilsky v. Berndt, et al.,* No. 71 Civ. 2534, 1976 U.S. Dist. LEXIS 14442 (S.D.N.Y., June 24, 1976). For more information regarding the background of

Continued

price offering rules, the proposed rule prohibits the grant of certain preferences (*e.g.,* selling concessions, discounts, other allowances or various economic equivalents) in connection with fixed price offerings of securities.

(A) Proposed FINRA Rule 5141

Paragraph (a) of the proposed rule provides that no member or person associated with a member that participates in a selling syndicate or selling group [6] or that acts as the single underwriter [7] in connection with a fixed price offering may offer or grant, directly or indirectly, to any person [8] or account that is not a member of the selling syndicate or selling group or that is a person or account other than the single underwriter [9] any securities in the offering at a price below the stated public offering price (*i.e.,* a "reduced price").[10]

Proposed FINRA Rule 5141(a) further provides that, subject to the requirements of FINRA Rule 5130,[11] a member of a selling syndicate or selling group, or a member that acts as the single underwriter, is permitted to sell securities in the offering to an affiliated person, provided the member does not sell the securities to the affiliated person at a reduced price as set forth under proposed FINRA Rule 5141.01.[12] The requirements of the proposed rule would apply until the termination of the offering or until a member, having made a bona fide public offering of the securities, is unable to continue selling such securities at the stated public offering price.[13]

Proposed FINRA Rule 5141(b) provides that nothing in the proposed rule shall prohibit the purchase and sale of securities in a fixed price offering between members of the selling syndicate or selling group.[14]

Proposed FINRA Rule 5141.01 defines the term "reduced price." The proposed rule provides that, for purposes of the rule, "reduced price" includes, without limitation, any offer or grant of any selling concession, discount or other allowance, credit, rebate, reduction of any fee (including any advisory or service fee), any sale of products or services at prices below reasonable commercially available rates for similar products and services (except for research, which, as discussed below, is subject to proposed FINRA Rule 5141.02), or any purchase of or arrangement to purchase securities from the person or account at more than their fair market price in exchange for securities in the offering.[15] FINRA notes that the proposed rule's approach of setting forth a definition for the term "reduced price" is new and is designed, like the current fixed price offering rules, to prohibit in comprehensive terms the direct or indirect offering of various economic equivalents of a price below the stated public offering price. For example, under the proposed definition of "reduced price" the practice of overtrading—addressed under current NASD Rule 2730 [16]—is prohibited. Similarly, under the proposed definition improper underwriting recapture—addressed under current NASD Rule 2740 [17]—would also be prohibited.

Proposed FINRA Rule 5141.02 is based generally on NASD Rules 2740(a)(1) and (b) and IM–2740 and preserves the allowance permitted under those rules with respect to research services. Specifically, the proposed rule provides that nothing in the new rule prohibits a member or

NASD Rules 0120(h), 2730, 2740 and 2750 and the associated IMs, *see Notice to Members* 81–3 (February 1981) (Adoption of New Rules Concerning Securities Distribution Practices) ("*Notice to Members* 81–3"); *see also* Securities Exchange Act Release No. 17371 (December 12, 1980), 45 FR 83707 (December 19, 1980) (Order Approving Proposed Rule Change; File No. SR–NASD–78–3).

[6] The terms "selling group" and "selling syndicate" are defined in NASD Rules 0120(p) and (q), respectively. (Other than to reflect the new conventions of the Consolidated FINRA Rulebook, FINRA does not propose to alter these two definitions, which will be addressed later in the rulebook consolidation process.)

[7] In response to commenter suggestion, FINRA has revised the proposed rule to clarify that it applies to any member acting as the single underwriter in an offering. *See* Section (A) under Item II.C; *see also* proposed FINRA Rules 5141(a), 5141.02 and 5141.03.

[8] NASD Rule 0120(n) defines "person" to include any natural person, partnership, corporation, association, or other legal entity. Other than to reflect the new conventions of the Consolidated FINRA Rulebook, FINRA does not propose to alter this definition, which will be addressed later in the rulebook consolidation process.

[9] Proposed FINRA Rule 5141(a) is based in part on NASD Rule 2740(a), which provides, among other things, that in connection with the sale of securities which are part of a fixed price offering a member may not grant or receive selling concessions, discounts, or other allowances except as consideration for services rendered in distribution and may not grant such concessions, discounts or other allowances to anyone other than a broker or dealer actually engaged in the investment banking or securities business. FINRA believes that it serves the interest of clarity for the new, consolidated rule to specify that its requirements apply to members of the selling syndicate or selling group, as those terms are defined under the FINRA rulebook, or the member acting as the single underwriter, as applicable.

[10] As discussed below, proposed FINRA Rule 5141.01 defines the term "reduced price" for purposes of the proposed rule.

[11] FINRA Rule 5130 (former NASD Rule 2790) addresses restrictions on the purchase and sale of initial equity public offerings. The rule generally prohibits sales to and purchases by a broker-dealer and accounts in which a broker-dealer has a beneficial interest.

[12] The proposed rule change eliminates the general prohibition on transactions with related persons as set forth in current NASD Rule 2750 (subject, as already discussed, to the requirements of FINRA Rule 5130). FINRA believes that the new, consolidated rule serves the core purpose of the fixed price offering rules because it prohibits the conferring of a reduced price on a person or account that is not a member of the selling syndicate or selling group or that is a person or account other than the single underwriter, *regardless of whether they are an affiliated person.* Accordingly, the new rule would render Rule 2750's general prohibition on related person transactions redundant. *See* Section (B) under this Item.

[13] The proposed rule provides that, for purposes of the rule, securities in a fixed price offering shall be presumed salable if the securities immediately trade in the secondary market at a price or prices which are above the stated public offering price. This is based in part on NASD Rule 2750(d), which provides among other things that a member or a related person of a member is "presumed not to have made a bona fide public offering * * * if the securities being offered immediately trade in the secondary market at a price or prices which are at or above the public offering price." FINRA believes that the standard set forth in the proposed rule is clear and easily applied. *See* Section (F) under Item II.C. FINRA notes that the proposed rule does not attempt to define "bona fide public offering" per se because the term "bona fide" speaks for itself and, as noted in current IM–2750, any such determination must rest on the basis of all relevant facts and circumstances.

[14] FINRA believes that it serves the interest of regulatory clarity for the new, consolidated rule to provide that the rule does not prohibit this aspect of the underwriting process.

[15] The proposed rule defines "fair market price" to refer generally to a price or range of prices at which a buyer and a seller, each unrelated to the other, would purchase the securities in the ordinary course of business in transactions that are of similar size and similar characteristics and are independent of any other transaction. FINRA believes that this standard, based in part on current NASD Rule 2730(b)(2), is straightforward and easily applied. For further discussion, *see* Section (E) under Item II.C. Similarly, FINRA believes that the standard "reasonable commercially available rates for similar products and services"—new for purposes of the proposed rule—is clear and effective. Lastly, FINRA notes that the proposed definition of "fair market price" is solely for purposes of proposed FINRA Rule 5141 and is not intended to affect any other provisions with respect to pricing that are set forth in FINRA rules.

[16] When Rule 2730 was adopted in its current form—then designated as Section 8 of Article III of the Rules of Fair Practice—FINRA explained: "An overtrade occurs when, as part of a swap, a dealer pays more for securities purchased from an institution than their fair market price. It also occurs if the member acting as agent charges less than a normal commission. In either event, the net effect of what the customer receives is a discount from the public offering price and is therefore prohibited." *See Notice to Members* 81–3.

[17] In *Notice to Members* 81–3, FINRA explained that Rule 2740, then designated as Section 24 of Article III of the Rules of Fair Practice, "serves the twofold function of promoting the securities distribution process and assuring that the selling concession, discount or other allowance offered to professional broker/dealers to facilitate the distribution of securities to investors is given, consistent with the representations made to the public in prospectuses, only to persons who are entitled to it. Thus, the section prohibits the surreptitious and unfair discriminatory granting of a discount to select investors who are in a position to take advantage of various recapture devices."

person associated with a member that participates in a selling syndicate or selling group, or that acts as the single underwriter, from selling securities in the offering to a person or account to which it has provided or will provide research, provided the person or account pays the stated public offering price for the securities and the research is provided pursuant to [18] the requirements of Section 28(e) of the Act.[19] The proposed rule provides, like current NASD Rule 2740(b) and IM–2740, that investment management or investment discretionary services are not research. The proposed rule further requires that any product or service provided by a member or person associated with a member that does not qualify as research must not confer a reduced price as set forth in proposed FINRA Rule 5141.01.

Proposed FINRA Rule 5141.03 is new and provides that transactions between a member of a selling syndicate or selling group, or between a single underwriter, and an affiliated person that are part of the normal and ordinary course of business and are unrelated to the sale or purchase of securities in a fixed price offering shall not be deemed to confer a reduced price under the rule.[20]

Proposed FINRA Rule 5141.04 incorporates the current definition of "fixed price offering" as set forth in current NASD Rule 0120(h) with only minor changes, primarily to reflect the new conventions of the Consolidated FINRA Rulebook.[21]

Lastly, proposed FINRA Rule 5141.05 is new and clarifies that a member that is an investment adviser may exempt securities that are purchased as part of a fixed price offering from the calculation of annual or periodic asset-based fees that the member charges a customer, provided the exemption is part of the member's normal and ordinary course of business with the customer and is not in connection with an offering.

(B) Deletion of NASD Rules 2730, 2740, 2750 and 0120(h) and Associated IMs 2730, 2740 and 2750

As noted above, proposed FINRA Rule 5141 is a new, consolidated rule that is based in part on, and replaces, the current fixed price offering rules (NASD Rules 2730, 2740, 2750 and 0120(h) and associated IMs 2730, 2740 and 2750). Following are the specific requirements set forth in the current fixed price offering rules that would be deleted as rendered redundant or obsolete by the new, consolidated rule:

NASD Rule 2730 and IM–2730

• NASD Rule 2730(a) generally prohibits overtrading by providing that a member engaged in a fixed price offering, who purchases or arranges the purchase of securities taken in trade, must purchase the securities at a fair market price at the time of purchase or act as agent in the sale of such securities and charge a normal commission. NASD Rule 2730(b) defines the terms "taken in trade," "fair market price" and "normal commission." NASD Rule 2730(c) sets forth certain criteria as to what constitutes the fair market price of securities taken in trade.[22] FINRA proposes to delete NASD Rules 2730(a) through (c) and the corresponding provisions under IM–2730 because proposed FINRA Rule 5141(a) and the definitions of "reduced price" and "fair market price" set forth in proposed FINRA Rule 5141.01 serve the purposes of the NASD provisions in more straightforward and streamlined fashion and accordingly render them obsolete.[23]

• NASD Rule 2730(d) addresses how bid and offer quotations for transactions subject to Rule 2730 must be obtained.[24] FINRA proposes to delete NASD Rule 2730(d) and the corresponding provisions under IM–2730 because they are rendered obsolete in view of FINRA's proposed deletion of the other portions of NASD Rule 2730.

• NASD Rule 2730(e) imposes certain recordkeeping requirements. Among other things, the rule requires a member who purchases a security taken in trade to keep adequate records to demonstrate compliance with the rule and to preserve the records for at least 24 months after the transaction.[25] FINRA proposes to delete NASD Rule 2730(e) and the corresponding provisions under IM–2730 because they are rendered obsolete in light of FINRA's proposed deletion of the other portions of Rule 2730 and in light of members' supervisory and transactional recordkeeping obligations under FINRA and SEC rules.[26]

NASD Rule 2740 and IM–2740

• NASD Rule 2740(a) generally provides that in connection with a fixed price offering, selling concessions, discounts or other allowances may only be paid to brokers or dealers actually engaged in the investment banking or securities business and only as consideration for services rendered in distribution.[27] Rule 2740(a)(1) provides that nothing in the rule prohibits a member from selling securities in a fixed price offering to any person or account to whom the member has provided, or will provide, bona fide research, if the purchaser pays the stated public offering price for the securities. Rule 2740(a)(2) provides that nothing in the rule prohibits a member from selling securities in a fixed price offering that the member owns to any person at any net price which may be fixed by the member unless prevented by agreement. FINRA proposes to delete NASD Rules 2740(a), (a)(1) and (a)(2) and the corresponding provisions under IM–2740 because proposed FINRA Rules 5141(a), 5141.01 and 5141.02, in combination, achieve the purpose of the NASD provisions and accordingly render them obsolete.[28]

• NASD Rule 2740(b) defines "bona fide research" to mean advice, rendered either directly or through publications or writings, as to the value of securities, the advisability of investing in, purchasing, or selling securities, and the availability of securities or purchasers or sellers of securities, or analyses and reports concerning issuers, industries, securities, economic factors and trends, portfolio strategy, and performance of

[18] FINRA has made a minor revision to proposed FINRA Rule 5141.02 so as to clarify that research, in order to qualify under the proposed rule, must be provided pursuant to the cited Securities Exchange Act provision. *See Regulatory Notice* 09–45 (Fixed Price Offerings) (August 2009).

[19] FINRA notes that proposed FINRA Rule 5141.02 serves the interest of regulatory clarity by articulating the allowance for research in straightforward and streamlined fashion.

[20] FINRA believes that this provision is a useful clarification that would generally protect ordinary-course business transactions between members of a selling syndicate or selling group, or between a single underwriter, and affiliates from being deemed transactions that confer a reduced price (so long as such transactions are unrelated to the sale or purchase of securities in a fixed price offering). *See* Section (D) under Item II.C.

[21] *See* note 4.

[22] Corresponding interpretive material in the first paragraph of IM–2730 addresses in detail, for compliance purposes, a "safe harbor" for certain transactions in securities with respect to the fair market price requirements. Corresponding interpretive materials under "Presumption of Noncompliance," "No Presumptions" and "Fair Market Price at the Time of Purchase," all under IM–2730, address additional fair market price-related criteria.

[23] *See* notes 15 and 16 and accompanying text.

[24] The quotations requirements set forth in NASD Rule 2730(d) are further elaborated by corresponding interpretive material under "Quotations" under IM–2730.

[25] Corresponding interpretive material under "Adequate Records" under IM–2730 sets forth additional requirements with respect to recordkeeping.

[26] The Commission staff remind FINRA members of their recordkeeping obligations under Rules 17a–3 and 17a–4 under the Act.

[27] Corresponding interpretive material in the first four paragraphs of IM–2740 provide further elaboration of requirements with respect to the term "services in distribution" and related issues.

[28] *See* notes 9 and 17 and accompanying text.

accounts.[29] Rule 2740(b) and the interpretive material under "Bona Fide Research Exclusion" under IM–2740 further provide that investment management or investment discretionary services are not bona fide research. FINRA proposes to delete NASD Rule 2740(b) and the corresponding provisions under IM–2740 because proposed FINRA Rule 5141.02 serves the purpose of the NASD provisions in more straightforward and streamlined fashion and accordingly renders them obsolete.[30]

• NASD Rule 2740(c) requires a member who grants a selling concession, discount or other allowance to another person to obtain a written agreement from that person that he or she will comply with Rule 2740. If a member grants a selling concession, discount or other allowance to a non-member broker or dealer in a foreign country, the rule requires that the member must obtain from that non-member an agreement that it will comply with NASD Rules 2730 and 2750 (in addition to Rule 2740) as if the non-member were a member, and that the non-member will comply with NASD Rule 2420 as that rule applies to a non-member broker-dealer in a foreign country. FINRA proposes to delete NASD Rule 2740(c) because it is sufficient to apply the requirements of the new, consolidated rule to FINRA members. The relationships between foreign non-members and their customers are beyond the scope of the proposed rule change.[31] FINRA notes that the requirements of proposed FINRA Rule 5141 would apply to members—and would reach any reduced prices that members offer or grant to non-members—regardless of whether agreements to comply with rules are obtained.[32]

• NASD Rule 2740(d) requires a member that receives an order from any person designating another broker or dealer to receive credit for the sale to file reports with FINRA within thirty days after the end of each calendar quarter with respect to each fixed price offering that terminated during the quarter. The rule further specifies certain information the reports must contain. NASD Rule 2740(e) requires a member that is designated by its customer for the sale of securities to keep and maintain for twenty-four months records of information similar to that set forth in NASD Rule 2740(d). FINRA proposes to delete NASD Rules 2740(d) and (e) because they are rendered obsolete in light of the proposed deletion of the other portions of NASD Rule 2740 and in light of members' supervisory and transactional recordkeeping obligations under FINRA and SEC rules.[33] Further, FINRA notes that its regulatory programs in connection with the proposed rule change will not require specific quarterly filings such as those currently required pursuant to NASD Rule 2740(d).

NASD Rule 2750 and IM–2750

• NASD Rule 2750(a) provides that no member engaged in a fixed price offering of securities is permitted to sell the securities to, or place the securities with, any person or account which is a related person of the member, unless the related person is itself subject to the rule or is a non-member broker-dealer that has entered into the agreements required under Rule 2740(c). NASD Rules 2750(b) and (c) address criteria pertaining to the term "related person." As discussed earlier, the proposed rule change would eliminate the prohibitions under Rule 2750(a), which FINRA believes would be redundant in light of the proposed rule's overall protections against the conferring of a reduced price.[34] Accordingly, FINRA proposes to delete NASD Rule 2750(a), as well as Rules 2750(b) and (c), as the criteria pertaining to the term "related person" would be rendered obsolete.

• NASD Rule 2750(d) provides that the rule's prohibitions do not apply to the sale or placement of securities in a trading or investment account of a member or a related person of a member after the termination of the fixed price offering if the member or related person has made a bona fide public offering of the securities.[35] FINRA proposes to delete NASD Rule 2750(d) and the corresponding provisions under IM–2750 because the provisions are obsolete in light of the proposed deletion of the other portions of Rule 2750.

• The first paragraph of IM–2750 addresses certain conditions under which a member that acts or plans to act as a sponsor of a unit investment trust is deemed not to violate Rule 2750. FINRA proposes to delete the IM provisions because, again, they are obsolete in light of the proposed deletion of the other portions of NASD Rule 2750.

Lastly, as noted earlier in this filing, the proposed rule change would incorporate the definition of "fixed price offering" set forth in current NASD Rule 0120(h) into the proposed rule in substantially identical form.[36] Accordingly, NASD Rule 0120(h) would be deleted.

FINRA will announce the effective date of the proposed rule change in a *Regulatory Notice* to be published no later than 90 days following Commission approval. The effective date will be no later than 180 days following publication of the *Regulatory Notice* announcing Commission approval.

2. Statutory Basis

FINRA believes that the proposed rule change is consistent with the provisions of Section 15A(b)(6) of the Act,[37] which requires, among other things, that FINRA rules must be designed to prevent fraudulent and manipulative acts and practices, to promote just and equitable principles of trade, and, in general, to protect investors and the public interest. FINRA believes that the proposed rule change would further the purposes of the Act because, as part of the rulebook consolidation process, the proposed rule change will streamline and reorganize the existing rules that protect the integrity of fixed price offerings by ensuring that securities in such offerings are sold to the public at the stated public offering price or prices, thereby preventing an undisclosed better price. Further, the proposed rule change will provide greater regulatory clarity with respect to this area.

[29] Corresponding interpretive material under "Bona Fide Research Exclusion" under IM–2740 provides that the definition of "bona fide research" is "substantially the same" as the definition of research that is set forth under Securities Exchange Act Section 28(e)(3), and incorporates by reference Commission guidance as to the circumstances when the exclusion for bona fide research is available. The "Bona Fide Research Exclusion" interpretive material further reiterates that investment management or investment discretionary services are not bona fide research. Additional corresponding interpretive material under "Indirect Discounts" under IM–2740 addresses products or services that fail to qualify as bona fide research.

[30] *See* notes 18 and 19 and accompanying text.

[31] Underwriting terms in foreign jurisdictions vary considerably, as do applicable regulatory requirements.

[32] For further discussion *see* Section (G) under Item II.C. FINRA notes that NASD Rule 2420 is being addressed separately as part of the rulebook consolidation process. *See Regulatory Notice* 09–69 (FINRA Requests Comment on Proposed Consolidated FINRA Rule Governing Payments to Unregistered Persons) (December 2009).

[33] The Commission staff again remind FINRA members of their recordkeeping obligations under Rules 17a–3 and 17a–4 under the Act.

[34] *See* note 12 and accompanying text.

[35] NASD Rule 2750(d) and corresponding interpretive material in the second paragraph under IM–2750 further set forth certain provisions with respect to bona fide public offerings. *See* note 13 and accompanying text.

[36] *See* note 4.

[37] 15 U.S.C. 78*o*–3(b)(6).

B. Self-Regulatory Organization's Statement on Burden on Competition

FINRA does not believe that the proposed rule change will result in any burden on competition that is not necessary or appropriate in furtherance of the purposes of the Act.

C. Self-Regulatory Organization's Statement on Comments on the Proposed Rule Change Received From Members, Participants, or Others

The proposed rule change was published for comment in *Regulatory Notice* 09–45 (August 2009) (the "*Notice*"). One comment was received in response to the *Notice.*[38] A copy of the *Notice* is attached as Exhibit 2a. A copy of the comment letter received in response to the *Notice* is attached as Exhibit 2b.

(A) Single Underwriters

CFRS suggested that proposed FINRA Rule 5141 should exclude from its coverage members that act as single underwriters rather than as members of a selling syndicate or selling group to distribute fixed price offerings of securities. In response, FINRA believes that permitting such an exclusion would seriously undermine the purposes of the proposed rule by eliminating a significant portion of offerings from its coverage. Accordingly, FINRA has revised the proposed rule to clarify that its requirements apply to members that act as single underwriters of fixed price offerings, not just members that are part of a selling syndicate or selling group.[39]

(B) Offer of Securities

CFRS suggested that the proposed rule's prohibitions should not extend to an offer of securities at a reduced price as defined under the rule, but rather only to transactions that are consummated. Though CFRS acknowledged that members should not make offers to sell securities at reduced prices that would be prohibited under the rule, it suggested that extending the rule's prohibitions to such offers would place undue burdens on members' compliance programs. CFRS further suggested that improper offers do not harm customers, issuers or the public. FINRA rejects this view. FINRA believes that to condone a view that improper offers are not harmful so long as they do not result in consummated transactions would be highly deleterious to the public interest. Further, FINRA takes this occasion to remind members that monitoring personnel to ensure that they do not make improper offers is an important function of any member's compliance program. Accordingly, FINRA declines to make the suggested revision to the rule.

(C) Definition of Fixed Price Offering

CFRS sought confirmation that the term "fixed price offering" as defined in proposed FINRA Rule 5141.04 permits multiple fixed prices in an offering of securities as explained in *Notice to Members* 81–3. In response, FINRA believes that the term "price or prices" as set forth in proposed FINRA Rule 5141.04, which is largely identical to current NASD Rule 0120(h), is clear that the rule does not by its terms prohibit multiple price offerings.

CFRS further suggested that the definition of the term "fixed price offering" should be revised to specifically exclude offerings made pursuant to certain Securities Act provisions and regulations thereunder. CFRS suggested that the definition of "fixed price offering" should align with the definition of "public offering" as set forth in NASD Rule 2720(f)(11) (FINRA has addressed NASD Rule 2720 in filing SR–FINRA–2010–026). In response, FINRA notes that CFRS has confused the differing purposes of the two rules. As a matter of investor protection with respect to any fixed price offering, proposed FINRA Rule 5141.04 is intended to reach any such offering at a stated public offering price or prices, all or part of which securities are publicly offered in the United States or any territory thereof, *whether or not registered* under the Securities Act. The scope of the proposed rule is different from that of NASD Rule 2720(f)(11) because the proposed rule regulates fixed price offerings, whether or not they are registered. Accordingly, FINRA declines to revise the proposed rule language.

(D) Sales to Affiliates

CFRS suggested that the provision with respect to affiliated persons set forth in proposed FINRA Rule 5141(a) should be placed in a separate Supplementary Material. CFRS proposed language that would suggest the sole function of the provision is to remind members that they should comply with FINRA Rule 5130 when making sales to affiliates. FINRA disagrees. FINRA believes that the proposed rule text as written is clear and serves to expressly provide that members must not sell securities in a fixed price offering to an affiliated person at a reduced price under the rule.

CFRS further suggests that proposed FINRA Rule 5141.03's provisions with respect to transactions with affiliated persons should be revised to expressly provide that such transactions are presumed to be unrelated to the sale or purchase of securities in a fixed price offering. FINRA disagrees. Such a presumption would undermine the rule's purpose, which, among other things, is intended to ensure that affiliate transactions are not employed as a device to confer an impermissible reduced price under the rule.

(E) Reduced Price

CFRS made a number of suggestions with respect to the definition of "reduced price" as set forth in proposed FINRA Rule 5141.01. CFRS requested that FINRA confirm that the proposed rule is not intended to nullify guidance that FINRA has previously published with respect to referral fees under NASD Rule 2420. In response, such confirmation is not called for in this filing, as the guidance cited by CFRS addresses Rule 2420, not the fixed price offering rules. CFRS suggested that proposed FINRA Rule 5141.05 should be revised so as to eliminate the provision that certain exemptions granted by investment advisers with respect to annual or periodic asset-based fees must not be in connection with an offering. FINRA disagrees. FINRA believes that it serves an important regulatory purpose to expressly provide that any such exemptions must be part of the member's ordinary course of business with the customer and not in connection with an offering. CFRS suggested language to establish an express presumption that credits, rebates, fee reductions and agreements for products and services that are part of member's normal and ordinary course of business would not be deemed to constitute a "reduced price" under the rule. Again, FINRA disagrees because adopting such a presumption would in effect permit the use of "normal and ordinary" business transactions to thwart the fundamental purposes of the rule. Accordingly, FINRA declines to accept the proffered language. Lastly, CFRS suggested that the proposed rule's definition of "fair market price" should not incorporate the concepts of unrelated parties and independence from any other transaction because the requirements do not provide any additional safeguards. FINRA disagrees. The concepts of unrelated parties and independence from any other transaction provide important standards for identifying whether a bona fide

[38] Letter from Jeffrey W. Rubin, Chair, Committee on Federal Regulation of Securities, Section of Business Law, American Bar Association ("CFRS"), to Marcia E. Asquith, Corporate Secretary, FINRA, dated September 18, 2009.

[39] *See* proposed FINRA Rules 5141(a), 5141.02 and 5141.03. *See also* note 7.

economic transaction has occurred. Further, the proposed language is fundamentally consistent with the basic concepts underlying current NASD Rule 2730. Accordingly, FINRA declines to revise the proposed language as suggested.[40]

(F) Under-Subscribed Offerings

CFRS expressed concern that the proposed rule should not apply to under-subscribed ("sticky") offerings. CFRS proposed exemptive language that generally would, in circumstances where all the securities in a fixed price offering cannot be sold at the stated offering price, permit a member to reduce the price of the remaining securities or to place the securities in the member's investment account or the account of an affiliated person. In response, FINRA appreciates CFRS's concern and has revised the proposed rule to provide that the rule's requirements shall apply until the termination of the offering or until a member, having made a bona fide public offering of the securities, is unable to continue selling such securities at the stated public offering price. As a matter of investor protection, FINRA has further revised the proposed rule to provide that, for purposes of the rule, securities in a fixed price offering shall be presumed salable if the securities immediately trade in the secondary market at a price or prices which are above the stated public offering price.[41]

FINRA declines to adopt CFRS's proffered language with respect to placement of offered securities in a member's investment account or the account of an affiliated person. First, the rule as proposed is clear that it does not prohibit a member from selling securities in the offering to affiliated persons, subject to FINRA Rule 5130, provided the member does not sell the securities to such affiliated person at a reduced price under the rule. Second, as already discussed, the rule by its terms is also clear that it does not apply to circumstances where the offering has terminated or where the member, having made a bona fide public offering of the securities, is unable to continue selling the securities at the stated public offering price. Third, FINRA notes that the appropriateness of placing unsold shares in a member's investment account, and the subsequent resale of the shares, raises other potential issues under the federal securities laws or other FINRA rules and is beyond the scope of the proposed rule change.

(G) Written Agreement of Compliance

CFRS sought confirmation that under the proposed rule members would no longer be required to obtain the written agreements required pursuant to current NASD Rule 2740(c) with respect to non-members. In response, FINRA notes that the proposed rule change eliminates NASD Rule 2740 in its entirety, including the requirement to obtain written agreements with non-members pursuant to paragraph (c) of that rule. The proposed rule by its terms regulates the activities of members. FINRA notes, however, that the proposed rule reaches any offer or grant of a reduced price under the rule to *any* person or account that is not a member of the selling syndicate or selling group (or, in the case of an offering with a single underwriter, to *any* person or account other than the single underwriter). Accordingly, the rule would reach reduced prices offered or granted to non-members as well as other members.

III. Date of Effectiveness of the Proposed Rule Change and Timing for Commission Action

Within 35 days of the date of publication of this notice in the **Federal Register** or within such longer period (i) as the Commission may designate up to 90 days of such date if it finds such longer period to be appropriate and publishes its reasons for so finding or (ii) as to which the self-regulatory organization consents, the Commission will:

(A) By order approve such proposed rule change, or

(B) institute proceedings to determine whether the proposed rule change should be disapproved.

IV. Solicitation of Comments

Interested persons are invited to submit written data, views and arguments concerning the foregoing, including whether the proposed rule change is consistent with the Act. Comments may be submitted by any of the following methods:

Electronic Comments

- Use the Commission's Internet comment form (*http://www.sec.gov/rules/sro.shtml*); or
- Send an e-mail to *rule-comments@sec.gov.* Please include File Number SR–FINRA–2010–029 on the subject line.

Paper Comments

- Send paper comments in triplicate to Elizabeth M. Murphy, Secretary, Securities and Exchange Commission, 100 F Street, NE., Washington, DC 20549–1090.

All submissions should refer to File Number SR–FINRA–2010–029. This file number should be included on the subject line if e-mail is used. To help the Commission process and review your comments more efficiently, please use only one method. The Commission will post all comments on the Commission's Internet Web site (*http://www.sec.gov/rules/sro.shtml*). Copies of the submission, all subsequent amendments, all written statements with respect to the proposed rule change that are filed with the Commission, and all written communications relating to the proposed rule change between the Commission and any person, other than those that may be withheld from the public in accordance with the provisions of 5 U.S.C. 552, will be available for Web site viewing and printing in the Commission's Public Reference Room, 100 F Street, NE., Washington, DC 20549, on official business days between the hours of 10 a.m. and 3 p.m. Copies of such filing also will be available for inspection and copying at the principal office of FINRA. All comments received will be posted without change; the Commission does not edit personal identifying information from submissions. You should submit only information that you wish to make available publicly. All submissions should refer to File Number SR–FINRA–2010–029 and should be submitted on or before July 12, 2010.

For the Commission, by the Division of Trading and Markets, pursuant to delegated authority.[42]

Florence E. Harmon,

Deputy Secretary.

[FR Doc. 2010–14967 Filed 6–18–10; 8:45 am]

BILLING CODE 8010–01–P

[40] FINRA has made one minor revision to the proposed definition of "fair market price" not in connection with the comment. As published in the *Notice,* the proposed rule language would have specified "a willing buyer and a willing seller." For the purpose of greater clarity, FINRA has deleted the word "willing."

[41] FINRA notes that this standard is based in part on provisions in current NASD Rule 2750(d). *See* note 13 and accompanying text.

[42] 17 CFR 200.30–3(a)(12).

SECURITIES AND EXCHANGE COMMISSION

[Release No. 34–62297; File No. SR–NASDAQ–2010–073]

Self-Regulatory Organizations; Notice of Filing and Immediate Effectiveness of a Proposed Rule Change by The NASDAQ Stock Market LLC To Establish a Short Term Option Program

June 15, 2010.

Pursuant to Section 19(b)(1) of the Securities Exchange Act of 1934 ("Act") [1] and Rule 19b–4 thereunder,[2] notice is hereby given that on June 14, 2010, The NASDAQ Stock Market LLC ("NASDAQ") filed with the Securities and Exchange Commission ("SEC" or "Commission") the proposed rule change as described in Items I and II below, which Items have been prepared by NASDAQ. The Commission is publishing this notice to solicit comments on the proposed rule change from interested persons.

I. Self-Regulatory Organization's Statement of the Terms of Substance of the Proposed Rule Change

NASDAQ is filing with the Securities and Exchange Commission ("SEC" or "Commission") a proposal for the NASDAQ Options Market ("NOM" or "Exchange") to amend Chapter IV, Section 6 (Series of Options Contracts Open for Trading) and Chapter XIV, Section 11 (Terms of Index Options Contracts) in order to list option series that expire one week after being opened for trading; to add the definition of Short Term Option Series to Chapter I, Section 1 (Definitions) and Chapter XIV, Section 2 (Definitions); and to make non-substantive changes to the language of Chapter IV, Section 6, Chapter I, Section 1, and Chapter XIV, Section 2.

The text of the proposed rule change is available from NASDAQ's Web site at *http://nasdaq.cchwallstreet.com/Filings/,* at NASDAQ's principal office, on the Commission's Web site at *http://www.sec.gov,* and at the Commission's Public Reference Room.

II. Self-Regulatory Organization's Statement of the Purpose of, and Statutory Basis for, the Proposed Rule Change

In its filing with the Commission, NASDAQ included statements concerning the purpose of and basis for the proposed rule change and discussed any comments it received on the proposed rule change. The text of these statements may be examined at the places specified in Item IV below. NASDAQ has prepared summaries, set forth in sections A, B, and C below, of the most significant aspects of such statements.

A. Self-Regulatory Organization's Statement of the Purpose of, and Statutory Basis for, the Proposed Rule Change

1. Purpose

The purpose of this proposal is to amend Chapter IV, Section 6 and Chapter XIV, Section 11 to establish a short term option program on the Exchange ("STO Program" or "Short Term Option Program") by proposing to add new Chapter IV, Section 6, Supplementary Material .07 to Section 6 and Chapter XIV, Section 11(h) in order to list option series that expire one week after being opened for trading ("Short Term Option Series" or "STO"). The Exchange also proposes to add the definition of Short Term Option Series to Chapter I, Section 1 and Chapter XIV, Section 2; [3] and to make non-substantive changes to conform the language of Chapter IV, Section 6, Chapter I, Section 1, and Chapter XIV, Section 2 and delete unnecessary language.

The Commission approved the Short Term Option Program on a pilot basis in 2005 and approved permanent establishment of the Short Term Option Program in 2009 on behalf of Chicago Board Options Exchange ("CBOE") in its Rules 5.5 and 24.9.[4] Thereafter, CBOE amended Rules 5.5 and 24.9 to permit opening Short Term Option Series not just on Friday but also on Thursday.[5] The Exchange's proposal is based directly on the short term option program (Weeklys Program) in CBOE Rules 5.5 and 24.9.

Specifically, the Exchange proposes to establish a Short Term Option Program for non-index options (*e.g.,* equity options and ETF options) in new Chapter IV, Section 6, Supplementary Material .07 to Section 6; and for index options in new Chapter XIV, Section 11(h). The Short Term Option Program allows the Exchange to list and trade Short Term Option Series. Thus, after an option class has been approved for listing and trading on the Exchange, the Exchange may open for trading on any Thursday or Friday that is a business day ("Short Term Option Opening Date") series of options on that class that expire on the Friday of the following business week that is a business day ("Short Term Option Expiration Date"). If the Exchange is not open for business on the respective Thursday or Friday, the Short Term Option Opening Date will be the first business day immediately prior to that respective Thursday or Friday. Similarly, if the Exchange is not open for business on the Friday of the following business week, the Short Term Option Expiration Date will be the first business day immediately prior to that Friday.[6]

Under the STO Program, the Exchange may select up to five approved option classes on which Short Term Option Series could be opened. The Exchange also may list Short Term Option Series on any option classes that are selected by other securities exchanges that employ a similar program under their respective rules.[7]

For each class selected for the STO Program, the Exchange may open up to twenty Short Term Option Series for each expiration date in that class, with approximately the same number of strike prices above and below the value of the underlying security or calculated index value at about the time that the Short Term Option Series is opened. The interval between strike prices on Short Term Option Series shall be the same as the strike prices for series in that same option class that expire in accordance with the normal monthly

[1] 15 U.S.C. 78s(b)(1).

[2] 17 CFR 240.19b–4.

[3] Short Term Option Series is defined as: A series in an option class that is approved for listing and trading on the Exchange in which the series is opened for trading on any Thursday or Friday that is a business day and that expires on the Friday of the next business week. If a Thursday or Friday is not a business day, the series may be opened (or shall expire) on the first business day immediately prior to that Thursday or Friday, respectively. Proposed Chapter I, Section 1(a)(58) and Chapter XIV, Section 2(n).

[4] CBOE refers to its short term option program as the "Weeklys Program." *See* Securities Exchange Act Release Nos. 52011 (July 12, 2005), 70 FR 41451 (July 19, 2005) (SR–CBOE–2004–63) (approval order establishing Weeklys Pilot Program) and 59824 (April 27, 2009), 74 FR 20518 (May 4, 2009) (SR–CBOE–2009–018) (approval order permanently establishing Weeklys Program).

Other options exchanges have also established short term option series pilots (but have not made them permanent). *See* Securities Exchange Act Release Nos. 52012 (July 12, 2005), 70 FR 41246 (July 18, 2005) (SR–ISE–2005–17) (approval order establishing short term option series pilot); 52013 (July 12, 2005), 70 FR 41471 (July 19, 2005) (SR–PCX–2005–32) (approval order establishing short term option series pilot); 52014 (July 12, 2005), 70 FR 41244 (July 18, 2005) (SR–AMEX–2005–035) (approval order establishing short term option series pilot).

[5] *See* Securities Exchange Act Release No. 62170 (May 25, 2010), 75 FR 30889 (June 2, 2010) (SR–CBOE–2010–048) (notice of filing and immediate effectiveness allowing opening Short Term Option Series on any Thursday or Friday).

[6] *See* proposed Chapter IV, Section 6, Supplementary Material .07 to Section 6 and Chapter XIV, Section 11(h).

[7] *See* proposed Chapter IV, Section 6, Supplementary Material .07(a) to Section 6 and Chapter XIV, Section 11(h)(l)(i).

expiration cycle.[8] Any strike prices listed by the Exchange shall be within thirty percent (30%) above or below the current value of the underlying index.[9]

If the Exchange opens less than twenty Short Term Option Series for a given expiration date, additional series may be opened for trading on the Exchange when the Exchange deems it necessary to maintain an orderly market, to meet customer demand, or when the current value of the underlying security or index moves substantially from the previously listed exercise prices. The total number of series for a given expiration date, however, will not exceed twenty series. Any additional strike prices listed by the Exchange shall be within 30% above or below the current price of the underlying security. The Exchange may also open additional strike prices of Short Term Option Series that are more than 30% above or below the current price of the underlying security provided that demonstrated customer interest exists for such series, as expressed by institutional, corporate or individual customers or their brokers. Market-Makers trading for their own account shall not be considered when determining customer interest under this provision. Moreover, the opening of the new Short Term Option Series shall not affect the series of options of the same class previously opened.[10]

The Short Term Option Program provides that no Short Term Option Series may expire in the same week in which monthly option series on the same class expire or, in the case of Quarterly Options Series, on an expiration that coincides with an expiration of Quarterly Options Series on the same class.[11]

With regard to the impact of this proposal on system capacity, the Exchange has analyzed its capacity and represents that it and the Options Price Reporting Authority ("OPRA") have the necessary systems capacity to handle the potential additional traffic associated with the listing and trading of options pursuant to the Short Term Option Program.

Finally, the Exchange is proposing to make non-substantive changes to conform the language of Chapter I, Section 1, Chapter IV, Section 6 and Chapter XIV, Section 2, and to delete unnecessary language. Thus, the Exchange proposes to delete unnecessary language regarding expiration in Chapter IV, Section 6(g) because expiration is discussed in newly-added STO Program rule language, and conforms the noted NOM rule language with CBOE Rules 5.5 and 24.9. The Exchange proposes to add a definition of Quarterly Options Series ("QOS") to Chapter I, Section 1 and Chapter XIV, Section 2. The definition was inadvertently left out when QOS listing standards were added for NOM,[12] and the addition conforms the noted NOM rule language to Phlx Rules 1000 and 1000A as well as the rules of CBOE.

The Exchange believes that the Short Term Option Program will provide investors with a flexible and valuable tool to manage risk exposure, minimize capital outlays, and be more responsive to the timing of events affecting the securities that underlie options contracts. The Exchange also believes that providing the flexibility to list all Short Term Option series (equity and index) on any Thursday or Friday will help implement the program more effectively and avoid investor confusion.

The Commission has requested, and the Exchange has agreed for the purposes of this filing, to submit one report to the Commission providing an analysis of the Exchange's Short Term Option Program (the "Report"). The Report will cover the period from the date of effectiveness of the STO Program through the first quarter of 2011, and will describe the experience of the Exchange with the STO Program in respect of the options classes included by the Exchange in such program.[13] The Report will be submitted by May 1, 2011, under separate cover and will seek confidential treatment under the Freedom of Information Act.

2. Statutory Basis

The Exchange believes that its proposal is consistent with Section 6(b) of the Act[14] in general, and furthers the objectives of Section 6(b)(5) of the Act[15] in particular, in that it is designed to prevent fraudulent and manipulative acts and practices, to promote just and equitable principles of trade, to foster cooperation and coordination with persons engaged in facilitating transactions in securities, and to remove impediments to and perfect the mechanisms of a free and open market and a national market system, by establishing a Short Term Option Program that will provide investors with a flexible and valuable tool to manage risk exposure, minimize capital outlays, and be more responsive to the timing of events affecting the securities that underlie option contracts.

B. Self-Regulatory Organization's Statement on Burden on Competition

The Exchange does not believe that the proposed rule change will result in any burden on competition that is not necessary or appropriate in furtherance of the purposes of the Act.

C. Self-Regulatory Organization's Statement on Comments on the Proposed Rule Change Received From Members, Participants, or Others

Written comments were neither solicited nor received.

III. Date of Effectiveness of the Proposed Rule Change and Timing for Commission Action

Because the foregoing proposed rule change does not significantly affect the protection of investors or the public interest, does not impose any significant burden on competition, and, by its terms, does not become operative for 30 days from the date on which it was filed, or such shorter time as the Commission may designate, it has become effective pursuant to Section 19(b)(3)(A) of the Act[16] and Rule 19b–4(f)(6) thereunder.[17]

[8] *See* proposed Chapter IV, Section 6, Supplementary Material .07(e) to Section 6 and Chapter XIV, Section 11(h)(l)(v).

[9] *See* proposed Chapter IV, Section 6, Supplementary Material .07(c) to Section 6 and Chapter XIV, Section 11(h)(l)(iii).

[10] *See* proposed Chapter IV, Section 6, Supplementary Material .07(d) to Section 6 and Chapter XIV, Section 11(h)(l)(iv).

[11] *See* proposed Chapter IV, Section 6, Supplementary Material .07(b) to Section 6 and Chapter XIV, Section 11(h)(l)(ii) Moreover, the Exchange expects that Short Term Option Series will settle (*e.g.,* in terms of A.M. or P.M.) in the same manner as do the monthly expiration series in the same option class.

[12] *See* Securities Exchange Act Release No. 58209 (July 22, 2008), 73 FR 43966 (July 29, 2008) (SR–NASDAQ–2008–064) (notice of filing and immediate effectiveness establishing quarterly option series program as pilot).

[13] The Report would include the following: (1) Data and written analysis on the open interest and trading volume in the classes for which Short Term Option Series were opened; (2) an assessment of the appropriateness of the option classes selected for the STO Program; (3) an assessment of the impact of the STO Program on the capacity of the Exchange, OPRA, and market data vendors (to the extent data from market data vendors is available); (4) any capacity problems or other problems that arose during the operation of the STO Program and how the Exchange addressed such problems; (5) any complaints that the Exchange received during the operation of the STO Program and how the Exchange addressed them; and (6) any additional information that would assist in assessing the operation of the STO Program.

[14] 15 U.S.C. 78f(b).

[15] 15 U.S.C. 78f(b)(5).

[16] 15 U.S.C. 78s(b)(3)(A). In addition, Rule 19b–4(f)(6) requires a self-regulatory organization to give the Commission written notice of its intent to file the proposed rule change, along with a brief description and text of the proposed rule change, at least five business days prior to the date of filing of the proposed rule change, or such shorter time as designated by the Commission. The Commission is waiving the five-day pre-filing requirement in this case.

[17] 17 CFR 240.19b–4(f)(6).

The Exchange has requested that the Commission waive the 30-day operative delay to permit the Exchange to compete with other exchanges whose rules permit the listing of similar short term options series.[18] The Commission believes that waiver of the operative delay is consistent with the protection of investors and the public interest because the proposal is substantially similar to a rule of another exchange that has been approved by the Commission.[19] Therefore, the Commission designates the proposal operative upon filing.[20]

At any time within 60 days of the filing of the proposed rule change, the Commission may summarily abrogate such rule change if it appears to the Commission that such action is necessary or appropriate in the public interest, for the protection of investors, or otherwise in furtherance of the purposes of the Act.

IV. Solicitation of Comments

Interested persons are invited to submit written data, views, and arguments concerning the foregoing, including whether the proposed rule change is consistent with the Act. Comments may be submitted by any of the following methods:

Electronic Comments

- Use the Commission's Internet comment form (*http://www.sec.gov/rules/sro.shtml*); or
- Send an e-mail to *rule-comments@sec.gov.* Please include File Number SR–NASDAQ–2010–073 on the subject line.

Paper Comments

- Send paper comments in triplicate to Elizabeth M. Murphy, Secretary, Securities and Exchange Commission, 100 F Street, NE., Washington, DC 20549–1090.

All submissions should refer to File Number SR–NASDAQ–2010–073. This file number should be included on the subject line if e-mail is used. To help the Commission process and review your comments more efficiently, please use only one method. The Commission will post all comments on the Commission's Internet Web site (*http://www.sec.gov/rules/sro.shtml*). Copies of the submission, all subsequent amendments, all written statements with respect to the proposed rule change that are filed with the Commission, and all written communications relating to the proposed rule change between the Commission and any person, other than those that may be withheld from the public in accordance with the provisions of 5 U.S.C. 552, will be available for Web site viewing and printing in the Commission's Public Reference Room, 100 F Street, NE., Washington, DC 20549, on official business days between the hours of 10 a.m. and 3 p.m. Copies of the filing also will be available for inspection and copying at the principal office of the Exchange. All comments received will be posted without change; the Commission does not edit personal identifying information from submissions. You should submit only information that you wish to make available publicly. All submissions should refer to File Number SR–NASDAQ–2010–073 and should be submitted on or before July 12, 2010.

For the Commission, by the Division of Trading and Markets, pursuant to delegated authority.[21]

Florence E. Harmon,

Deputy Secretary.

[FR Doc. 2010–14966 Filed 6–18–10; 8:45 am]

BILLING CODE 8010–01–P

[18] *See supra* notes 4–5 and accompanying text.

[19] *See* Securities Exchange Act Release No. 59824 (April 27, 2009), 74 FR 20518 (May 4, 2009) (SR–CBOE–2009–018).

[20] For purposes only of waiving the 30-day operative delay, the Commission has considered the proposed rule's impact on efficiency, competition, and capital formation. *See* 15 U.S.C. 78c(f).

[21] 17 CFR 200.30–3(a)(12).

SECURITIES AND EXCHANGE COMMISSION

[Release No. 34–62295; File No. SR–NASDAQ–2010–070]

Self-Regulatory Organizations; Notice of Filing and Immediate Effectiveness of Proposed Rule Change by NASDAQ Stock Market LLC To List Options on Trust Issued Receipts in $1 Strike Intervals

June 15, 2010.

Pursuant to Section 19(b)(1) of the Securities Exchange Act of 1934 ("Act")[1] and Rule 19b–4 thereunder,[2] notice is hereby given that on June 10, 2010 The NASDAQ Stock Market LLC ("NASDAQ" or "Exchange") filed with the Securities and Exchange Commission ("SEC" or "Commission") the proposed rule change as described in Items I and II below, which Items have been prepared by NASDAQ. The Commission is publishing this notice to solicit comments on the proposed rule change from interested persons.

[1] 15 U.S.C. 78s(b)(1).

[2] 17 CFR 240.19b–4.

I. Self-Regulatory Organization's Statement of the Terms of Substance of the Proposed Rule Change

The NASDAQ Stock Market LLC proposes to amend Chapter IV, Securities Traded on NOM, Section 6, Series of Options Contracts Open for Trading, to allow the Exchange to list options on Trust Issued Receipts in $1 strike price intervals.

The text of the proposed rule change is available on the Exchange's Web site at *http://www.nasdaq.cchwallstreet.com,* at the principal office of the Exchange, on the Commission's Web site at *http://www.sec.gov,* and at the Commission's Public Reference Room.

II. Self-Regulatory Organization's Statement of the Purpose of, and Statutory Basis for, the Proposed Rule Change

In its filing with the Commission, the Exchange included statements concerning the purpose of and basis for the proposed rule change. The text of these statements may be examined at the places specified in Item IV below. The Exchange has prepared summaries, set forth in sections A, B, and C below, of the most significant aspects of such statements.

A. Self-Regulatory Organization's Statement of the Purpose of, and Statutory Basis for, the Proposed Rule Change

1. Purpose

The purpose of the proposed rule change is to amend Chapter IV, Securities Traded on NOM, Section 6, Series of Options Contracts Open for Trading, by adding additional text to Section 6(d)(v) to allow the Exchange to list options on the Trust Issued Receipts ("TIRs"), including HOLding Company Depository ReceiptS ("HOLDRS"), as defined in Supplementary Material to Section 6 at .01(b), in $1 or greater strike price intervals, where the strike price is $200 or less and $5 or greater where the strike price is greater than $200.[3]

Currently, the strike price intervals for options on TIRs are as follows: (1) $2.50 or greater where the strike price is $25.00 or less; (2) $5.00 or greater where the strike price is greater than $25.00; and (3) $10.00 or greater where the strike price is greater than $200.[4]

[3] HOLDRS are a type of Trust Issued Receipt and the current proposal would permit $1 strikes for options on HOLDRS (where the strike price is less than $200).

[4] *See* Chapter IV, Section 6(d). *See also* Securities Exchange Act Release No. 61347 (January 13, 2010), 75 FR 3513 (January 21, 2010) (SR–NASDAQ–2010–003).

The Exchange is seeking to permit $1 strikes for options on TIRs (where the strike price is less than $200) because TIRs have characteristics similar to exchange-traded funds ("ETFs"). Specifically, TIRs are exchange-listed securities representing beneficial ownership of the specific deposited securities represented by the receipts. They are negotiable receipts issued by a trust representing securities of issuers that have been deposited and held on behalf of the holders of the TIRs. TIRs, which trade in round-lots of 100, and multiples thereof, may be issued after their initial offering through a deposit with the trustee of the required number of shares of common stock of the underlying issuers. This characteristic of TIRs is similar to that of ETFs which also may be created on any business day upon receipt of the requisite securities or other investment assets comprising a creation unit. The trust only issues receipts upon the deposit of the shares of the underlying securities that are represented by a round-lot of 100 receipts. Likewise, the trust will cancel, and an investor may obtain, hold, trade or surrender TIRs in a round-lot and round-lot multiples of 100 receipts.

Strike prices for ETF options are permitted in $1 or greater intervals where the strike price is $200 or less and $5 or greater where the strike is greater than $200.[5] Accordingly, the Exchange believes that the rationale for permitting $1 strikes for ETF options equally applies to permitting $1 strikes for options on TIRs.

The Exchange has analyzed its capacity and represents that it believes the Exchange and the Options Price Reporting Authority have the necessary system capacity to handle the additional traffic associated with the listing and trading of $1 strikes, where the strike price is less than $200, for options on TIRs.

2. Statutory Basis

The Exchange believes that its proposal is consistent with Section 6(b) of the Act[6] in general, and furthers the objectives of Section 6(b)(5) of the Act[7] in particular, in that it is designed to promote just and equitable principles of trade, to remove impediments to and perfect the mechanism of a free and open market and a national market system, and, in general to protect investors and the public interest, by allowing the Exchange to list options on TIRs at $1 strike price intervals. The Exchange believes that the marketplace and investors expect options on TIRs to trade in a similar manner to ETF options and this filing would allow the marketplace and investors the ability to trade options on TIRs. The Exchange further believes that investors will be better served if $1 strike price intervals are available for options on TIRs, where the strike price is less than $200.

B. Self-Regulatory Organization's Statement on Burden on Competition

NASDAQ does not believe that the proposed rule change will result in any burden on competition that is not necessary or appropriate in furtherance of the purposes of the Act.

C. Self-Regulatory Organization's Statement on Comments on the Proposed Rule Change Received From Members, Participants, or Others

Written comments were neither solicited nor received.

III. Date of Effectiveness of the Proposed Rule Change and Timing for Commission Action

Because the foregoing proposed rule change does not significantly affect the protection of investors or the public interest, does not impose any significant burden on competition, and, by its terms, does not become operative for 30 days from the date on which it was filed, or such shorter time as the Commission may designate, it has become effective pursuant to Section 19(b)(3)(A) of the Act[8] and Rule 19b–4(f)(6) thereunder.[9]

The Exchange has requested that the Commission waive the 30-day operative delay. The Commission believes that waiver of the operative delay is consistent with the protection of investors and the public interest because the proposal is substantially similar to a rule of another exchange that has been approved by the Commission.[10] Therefore, the Commission designates the proposal operative upon filing.[11]

At any time within 60 days of the filing of the proposed rule change, the Commission may summarily abrogate such rule change if it appears to the Commission that such action is necessary or appropriate in the public interest, for the protection of investors, or otherwise in furtherance of the purposes of the Act.

IV. Solicitation of Comments

Interested persons are invited to submit written data, views, and arguments concerning the foregoing, including whether the proposed rule change is consistent with the Act. Comments may be submitted by any of the following methods:

Electronic Comments

- Use the Commission's Internet comment form (*http://www.sec.gov/rules/sro.shtml*); or
- Send an e-mail to *rule-comments@sec.gov.* Please include File Number SR–NASDAQ–2010–070 on the subject line.

Paper Comments

- Send paper comments in triplicate to Elizabeth M. Murphy, Secretary, Securities and Exchange Commission, 100 F Street, NE., Washington, DC 20549–1090.

All submissions should refer to File Number SR–NASDAQ–2010–070. This file number should be included on the subject line if e-mail is used. To help the Commission process and review your comments more efficiently, please use only one method. The Commission will post all comments on the Commission's Internet Web site (*http://www.sec.gov/rules/sro.shtml*). Copies of the submission, all subsequent amendments, all written statements with respect to the proposed rule change that are filed with the Commission, and all written communications relating to the proposed rule change between the Commission and any person, other than those that may be withheld from the public in accordance with the provisions of 5 U.S.C. 552, will be available for Web site viewing and printing in the Commission's Public Reference Room, 100 F Street, NE., Washington, DC 20549, on official business days between the hours of 10 a.m. and 3 p.m. Copies of the filing also will be available for inspection and copying at the principal office of the Exchange. All comments received will be posted without change; the Commission does not edit personal

[5] *See* Chapter IV, Supplementary Material to Section 6 at .01(b), (permitting $1 strikes for options on Units covered under Section 6(d) also known as ETF options).

[6] 15 U.S.C. 78f(b).

[7] 15 U.S.C. 78f(b)(5).

[8] 15 U.S.C. 78s(b)(3)(A).

[9] 17 CFR 240.19b–4(f)(6). In addition, Rule 19b–4(f)(6)(iii) requires the self-regulatory organization to submit to the Commission written notice of its intent to file the proposed rule change, along with a brief description and text of the proposed rule change, at least five business days prior to the date of filing of the proposed rule change, or such shorter time as designated by the Commission. The Commission has waived the five-day pre-filing requirement in this case.

[10] *See* Securities Exchange Release No. 34–62141 (May 20, 2010), 75 FR 29787 (May 27, 2010) (SR–CBOE–2010–036).

[11] For purposes only of waiving the 30-day operative delay, the Commission has considered the proposed rule's impact on efficiency, competition, and capital formation. *See* 15 U.S.C. 78c(f).

identifying information from submissions. You should submit only information that you wish to make available publicly. All submissions should refer to File Number SR–NASDAQ–2010–070 and should be submitted on or before July 12, 2010.

For the Commission, by the Division of Trading and Markets, pursuant to delegated authority.[12]

Florence E. Harmon,

Deputy Secretary.

[FR Doc. 2010–14964 Filed 6–18–10; 8:45 am]

BILLING CODE 8010–01–P

SECURITIES AND EXCHANGE COMMISSION

[Release No. 34–62296; File No. SR–Phlx–2010–84]

Self-Regulatory Organizations; Notice of Filing and Immediate Effectiveness of a Proposed Rule Change by NASDAQ OMX PHLX, Inc. To Establish a Short Term Option Program

June 15, 2010.

Pursuant to Section 19(b)(1) of the Securities Exchange Act of 1934 ("Act") [1] and Rule 19b–4 thereunder,[2] notice is hereby given that on June 14, 2010, NASDAQ OMX PHLX, Inc. ("Phlx" or "Exchange") filed with the Securities and Exchange Commission ("SEC" or "Commission") the proposed rule change as described in Items I and II below, which Items have been prepared by the Exchange. The Commission is publishing this notice to solicit comments on the proposed rule change from interested persons.

I. Self-Regulatory Organization's Statement of the Terms of Substance of the Proposed Rule Change

The Exchange is filing with the Commission a proposal to amend Rule 1012 (Series of Options Open for Trading) and Rule 1101A (Terms of Option Contracts) in order to list option series that expire one week after being opened for trading; to add the definition of Short Term Option Series to Rule 1000 (Applicability, Definitions and References) and Rule 1000A (Applicability and Definitions); and to make non-substantive changes to the language of Rule 1012 and Rule 1101A.

The Exchange requests that the Commission waive the 30-day operative delay period contained in Exchange Act Rule 19b–4(f)(6)(iii).[3]

The text of the proposed rule change is available on the Exchange's Web site at *http://nasdaqomxphlx.cchwallstreet.com/NASDAQOMXPHLX/Filings/,* at the principal office of the Exchange, on the Commission's Web site at *http://www.sec.gov,* and at the Commission's Public Reference Room.

II. Self-Regulatory Organization's Statement of the Purpose of, and Statutory Basis for, the Proposed Rule Change

In its filing with the Commission, the Exchange included statements concerning the purpose of and basis for the proposed rule change and discussed any comments it received on the proposed rule change. The text of these statements may be examined at the places specified in Item IV below. The Exchange has prepared summaries, set forth in sections A, B, and C below, of the most significant aspects of such statements.

A. Self-Regulatory Organization's Statement of the Purpose of, and Statutory Basis for, the Proposed Rule Change

1. Purpose

The purpose of this proposal is to amend Rules 1012 and 1101A to establish a short term option program on the Exchange ("STO Program" or "Short Term Option Program") by proposing to add new Commentary .11 to Rule 1012 and new subsection (b)(vi) to Rule 1101A in order to list option series that expire one week after being opened for trading ("Short Term Option Series" or "STO"). The Exchange also proposes to add the definition of Short Term Option Series to Rule 1000 and Rule 1000A;[4] and to make non-substantive changes to conform the language of Rule 1012 and Rule 1101A and delete unnecessary language.

The Commission approved the Short Term Option Program on a pilot basis in 2005 and approved permanent establishment of the Short Term Option Program in 2009 on behalf of Chicago Board Options Exchange ("CBOE") in its Rules 5.5 and 24.9.[5] Thereafter, CBOE amended Rules 5.5 and 24.9 to permit opening Short Term Option Series not just on Friday but also on Thursday.[6] The Exchange's proposal is based directly on the short term option program (Weeklys Program) in CBOE Rules 5.5 and 24.9.

Specifically, the Exchange proposes to establish a Short Term Option Program for non-index options (*e.g.,* equity options and ETF options) in new Commentary .11 to Rule 1012; and for index options in new subsection (b)(vi) to Rule 1001A. The Short Term Option Program allows the Exchange to list and trade Short Term Option Series. Thus, after an option class has been approved for listing and trading on the Exchange, the Exchange may open for trading on any Thursday or Friday that is a business day ("Short Term Option Opening Date") series of options on that class that expire on the Friday of the following business week that is a business day ("Short Term Option Expiration Date"). If the Exchange is not open for business on the respective Thursday or Friday, the Short Term Option Opening Date will be the first business day immediately prior to that respective Thursday or Friday. Similarly, if the Exchange is not open for business on the Friday of the following business week, the Short Term Option Expiration Date will be the first business day immediately prior to that Friday.[7]

Under the STO Program, the Exchange may select up to five approved option classes on which Short Term Option Series could be opened. The Exchange also may list Short Term Option Series on any option classes that are selected by other securities exchanges that employ a similar program under their respective rules.[8]

[12] 17 CFR 200.30–3(a)(12).

[1] 15 U.S.C. 78s(b)(1).

[2] 17 CFR 240.19b–4.

[3] 17 CFR 240.19b–4(f)(6)(iii).

[4] Short Term Option Series is defined as: A series in an option class that is approved for listing and trading on the Exchange in which the series is opened for trading on any Thursday or Friday that is a business day and that expires on the Friday of the next business week. If a Thursday or Friday is not a business day, the series may be opened (or shall expire) on the first business day immediately prior to that Thursday or Friday, respectively. Proposed Rules 1000(b)(44) and 1000A(b)(16).

[5] CBOE refers to its short term option program as the "Weeklys Program." *See* Securities Exchange Act Release Nos. 52011 (July 12, 2005), 70 FR 41451 (July 19, 2005) (SR–CBOE–2004–63) (approval order establishing Weeklys Pilot Program) and 59824 (April 27, 2009), 74 FR 20518 (May 4, 2009) (SR–CBOE–2009–018) (approval order permanently establishing Weeklys Program).

Other options exchanges have also established short term option series pilots (but have not made them permanent). *See* Securities Exchange Act Release Nos. 52012 (July 12, 2005), 70 FR 41246 (July 18, 2005) (SR–ISE–2005–17) (approval order establishing short term option series pilot); 52013 (July 12, 2005), 70 FR 41471 (July 19, 2005) (SR–PCX–2005–32) (approval order establishing short term option series pilot); 52014 (July 12, 2005), 70 FR 41244 (July 18, 2005) (SR–AMEX–2005–035) (approval order establishing short term option series pilot).

[6] *See* Securities Exchange Act Release No. 62170 (May 25, 2010), 75 FR 30889 (June 2, 2010) (SR–CBOE–2010–048) (notice of filing and immediate effectiveness allowing opening Short Term Option Series on any Thursday or Friday).

[7] *See* proposed Commentary .11 to Rule 1012 and Rule 1101A(b)(6).

[8] *See* proposed Commentary .11(a) to Rule 1012 and Rule 1101A(b)(6)(A).

For each class selected for the STO Program, the Exchange may open up to twenty Short Term Option Series for each expiration date in that class, with approximately the same number of strike prices above and below the value of the underlying security or calculated index value at about the time that the Short Term Option Series is opened. The interval between strike prices on Short Term Option Series shall be the same as the strike prices for series in that same option class that expire in accordance with the normal monthly expiration cycle.[9] Any strike prices listed by the Exchange shall be within thirty percent (30%) above or below the current value of the underlying index.[10]

If the Exchange opens less than twenty Short Term Option Series for a given expiration date, additional series may be opened for trading on the Exchange when the Exchange deems it necessary to maintain an orderly market, to meet customer demand, or when the current value of the underlying security or index moves substantially from the previously listed exercise prices. The total number of series for a given expiration date, however, will not exceed twenty series. Any additional strike prices listed by the Exchange shall be within 30% above or below the current price of the underlying security. The Exchange may also open additional strike prices of Short Term Option Series that are more than 30% above or below the current price of the underlying security provided that demonstrated customer interest exists for such series, as expressed by institutional, corporate or individual customers or their brokers. Market-Makers trading for their own account shall not be considered when determining customer interest under this provision. Moreover, the opening of the new Short Term Option Series shall not affect the series of options of the same class previously opened.[11]

The Short Term Option Program provides that no Short Term Option Series may expire in the same week in which monthly option series on the same class expire or, in the case of Quarterly Options Series, on an expiration that coincides with an expiration of Quarterly Options Series on the same class.[12]

With regard to the impact of this proposal on system capacity, the Exchange has analyzed its capacity and represents that it and the Options Price Reporting Authority ("OPRA") have the necessary systems capacity to handle the potential additional traffic associated with the listing and trading of options pursuant to the Short Term Option Program.

Finally, the Exchange is proposing to make non-substantive changes to conform the language of Rule 1012 and Rule 1101A, and to delete unnecessary language. Thus, the Exchange proposes to delete unnecessary language regarding expiration in Commentary .08(b) to rule 1012 and proposed Rule 1012(v)(B) because expiration is discussed in newly-added STO Program rule language, and conforms the Phlx rule language with CBOE Rules 5.5 and 24.9. The Exchange proposes to update the numbering (lettering) of Rule 1101A for internal rule language consistency.

The Exchange believes that the Short Term Option Program will provide investors with a flexible and valuable tool to manage risk exposure, minimize capital outlays, and be more responsive to the timing of events affecting the securities that underlie options contracts. The Exchange also believes that providing the flexibility to list all Short Term Option series (equity and index) on any Thursday or Friday will help implement the program more effectively and avoid investor confusion.

The Commission has requested, and the Exchange has agreed for the purposes of this filing, to submit one report to the Commission providing an analysis of the Exchange's Short Term Option Program (the "Report"). The Report will cover the period from the date of effectiveness of the STO Program through the first quarter of 2011, and will describe the experience of the Exchange with the STO Program in respect of the options classes included by the Exchange in such program.[13] The Report will be submitted by May 1, 2011, under separate cover and will seek confidential treatment under the Freedom of Information Act.

2. Statutory Basis

The Exchange believes that its proposal is consistent with Section 6(b) of the Act[14] in general, and furthers the objectives of Section 6(b)(5) of the Act[15] in particular, in that it is designed to prevent fraudulent and manipulative acts and practices, to promote just and equitable principles of trade, to foster cooperation and coordination with persons engaged in facilitating transactions in securities, and to remove impediments to and perfect the mechanisms of a free and open market and a national market system, by establishing a Short Term Option Program that will provide investors with a flexible and valuable tool to manage risk exposure, minimize capital outlays, and be more responsive to the timing of events affecting the securities that underlie option contracts.

B. Self-Regulatory Organization's Statement on Burden on Competition

The Exchange does not believe that the proposed rule change will impose any burden on competition not necessary or appropriate in furtherance of the purposes of the Act.

C. Self-Regulatory Organization's Statement on Comments on the Proposed Rule Change Received From Members, Participants, or Others

No written comments were either solicited or received.

III. Date of Effectiveness of the Proposed Rule Change and Timing for Commission Action

Because the foregoing proposed rule change does not significantly affect the protection of investors or the public interest, does not impose any significant burden on competition, and, by its terms, does not become operative for 30 days from the date on which it was filed, or such shorter time as the Commission may designate, it has become effective pursuant to Section

[9] *See* proposed Commentary .11(e) to Rule 1012 and Rule 1101A(b)(6)(E).

[10] *See* proposed Commentary .11(c) to Rule 1012 and Rule 1101A(b)(6)(C).

[11] *See* proposed Commentary .11(d) to Rule 1012 and Rule 1101A(b)(6)(D).

[12] *See* proposed Commentary .11(b) to Rule 1012 and Rule 1101A(b)(6)(B). Moreover, the Exchange expects that Short Term Option Series will settle (*e.g.,* in terms of A.M. or P.M.) in the same manner as do the monthly expiration series in the same option class.

[13] The Report would include the following: (1) Data and written analysis on the open interest and trading volume in the classes for which Short Term Option Series were opened; (2) an assessment of the appropriateness of the option classes selected for the STO Program; (3) an assessment of the impact of the STO Program on the capacity of the Exchange, OPRA, and market data vendors (to the extent data from market data vendors is available); (4) any capacity problems or other problems that arose during the operation of the STO Program and how the Exchange addressed such problems; (5) any complaints that the Exchange received during the operation of the STO Program and how the Exchange addressed them; and (6) any additional information that would assist in assessing the operation of the STO Program.

[14] 15 U.S.C. 78f(b).

[15] 15 U.S.C. 78f(b)(5).

19(b)(3)(A) of the Act[16] and Rule 19b–4(f)(6) thereunder,[17]

The Exchange has requested that the Commission waive the 30-day operative delay to permit the Exchange to compete with other exchanges whose rules permit the listing of similar short term options series.[18] The Commission believes that waiver of the operative delay is consistent with the protection of investors and the public interest because the proposal is substantially similar to a rule of another exchange that has been approved by the Commission.[19] Therefore, the Commission designates the proposal operative upon filing.[20]

At any time within 60 days of the filing of the proposed rule change, the Commission may summarily abrogate such rule change if it appears to the Commission that such action is necessary or appropriate in the public interest, for the protection of investors, or otherwise in furtherance of the purposes of the Act.

IV. Solicitation of Comments

Interested persons are invited to submit written data, views, and arguments concerning the foregoing, including whether the proposed rule change is consistent with the Act. Comments may be submitted by any of the following methods:

Electronic Comments

- Use the Commission's Internet comment form (*http://www.sec.gov/rules/sro.shtml);* or
- Send an e-mail to *rule-comments@sec.gov.* Please include File Number SR–Phlx–2010–84 on the subject line.

Paper Comments

- Send paper comments in triplicate to Elizabeth M. Murphy, Secretary, Securities and Exchange Commission, 100 F Street, NE., Washington, DC 20549–1090.

All submissions should refer to File Number SR–Phlx–2010–84. This file number should be included on the subject line if e-mail is used. To help the Commission process and review your comments more efficiently, please use only one method. The Commission will post all comments on the Commission's Internet Web site (*http://www.sec.gov/rules/sro.shtml*). Copies of the submission, all subsequent amendments, all written statements with respect to the proposed rule change that are filed with the Commission, and all written communications relating to the proposed rule change between the Commission and any person, other than those that may be withheld from the public in accordance with the provisions of 5 U.S.C. 552, will be available for Web site viewing and printing in the Commission's Public Reference Room, 100 F Street, NE., Washington, DC 20549, on official business days between the hours of 10 a.m. and 3 p.m. Copies of the filing also will be available for inspection and copying at the principal office of the Exchange. All comments received will be posted without change; the Commission does not edit personal identifying information from submissions. You should submit only information that you wish to make available publicly. All submissions should refer to File Number SR–Phlx–2010–84 and should be submitted on or before July 12, 2010.

For the Commission, by the Division of Trading and Markets, pursuant to delegated authority.[21]

Florence E. Harmon,

Deputy Secretary.

[FR Doc. 2010–14965 Filed 6–18–10; 8:45 am]

BILLING CODE 8010–01–P

[16] 15 U.S.C. 78s(b)(3)(A). In addition, Rule 19b–4(f)(6) requires a self-regulatory organization to give the Commission written notice of its intent to file the proposed rule change, along with a brief description and text of the proposed rule change, at least five business days prior to the date of filing of the proposed rule change, or such shorter time as designated by the Commission. The Commission is waiving the five-day pre-filing requirement in this case.

[17] 17 CFR 240.19b–4(f)(6).

[18] *See supra* notes 5–6 and accompanying text.

[19] *See* Securities Exchange Act Release No. 59824 (April 27, 2009), 74 FR 20518 (May 4, 2009) (SR–CBOE–2009–018).

[20] For purposes only of waiving the 30-day operative delay, the Commission has considered the proposed rule's impact on efficiency, competition, and capital formation. *See* 15 U.S.C. 78c(f).

[21] 17 CFR 200.30–3(a)(12).

DEPARTMENT OF STATE

[Public Notice 7058]

60-Day Notice of Proposed Information Collection: Form DS–5504, Application for a U.S. Passport: Name Change, Data Correction, and Limited Passport Book Replacement, OMB Control Number 1405–0160

ACTION: Notice of request for public comments.

SUMMARY: The Department of State is seeking Office of Management and Budget (OMB) approval for the information collection described below. The purpose of this notice is to allow 60 days for public comment in the **Federal Register** preceding submission to OMB. We are conducting this process in accordance with the Paperwork Reduction Act of 1995.

- *Title of Information Collection:* Application for a U.S. Passport: Name Change, Data Correction, And Limited Passport Book Replacement.
- *OMB Control Number:* 1405–0160.
- *Type of Request:* Revision of a Currently Approved Collection.
- *Originating Office:* Bureau of Consular Affairs, Passport Services CA/PPT.
- *Form Number:* DS–5504.
- *Respondents:* Individuals or Households.
- *Estimated Number of Respondents:* 181,000 respondents per year.
- *Estimated Number of Responses:* 181,000 responses per year.
- *Average Hours per Response:* 30 minutes.
- *Total Estimated Burden:* 90,500 hours per year.
- *Frequency:* On occasion.
- *Obligation to Respond:* Required to Obtain or Retain a Benefit.

DATES: The Department will accept comments from the public up to 60 days from June 21, 2010.

ADDRESSES: You may submit comments by any of the following methods:

- *E-mail: PPT-Forms-Officer@state.gov.*
- *Mail (paper, disk, or CD–ROM submissions):* Passport Forms Management Officer, U.S. Department of State, Office of Program Management and Operational Support, 2100 Pennsylvania Avenue, NW., Room 3031, Washington, DC 20037.

You must include the DS form number (if applicable), information collection title, and OMB control number in any correspondence.

FOR FURTHER INFORMATION CONTACT: Direct requests for additional information regarding the collection listed in this notice, including requests for copies of the proposed information collection and supporting documents, to Passport Forms Management Officer, U.S. Department of State, Office of Program Management and Operational Support, 2100 Pennsylvania Avenue, NW., Room 3031, Washington, DC 20037, who may be reached on 202–663–2457 or at *PPT-Forms-Officer@state.gov.*

SUPPLEMENTARY INFORMATION:

We are soliciting public comments to permit the Department to:

- Evaluate whether the proposed information collection is necessary for the proper performance of our functions.
- Evaluate the accuracy of our estimate of the burden of the proposed

collection, including the validity of the methodology and assumptions used.

• Enhance the quality, utility, and clarity of the information to be collected.

• Minimize the reporting burden on those who are to respond, including the use of automated collection techniques or other forms of technology.

Abstract of proposed collection: The information collected on the DS–5504 is used to facilitate the re-issuance of passports to U.S. citizens and nationals when (a) the passport holder's name has changed within the first year of the issuance of the passport; (b) the passport holder needs correction of descriptive information on the data page of the passport; or (c) the passport holder wishes to obtain a fully valid passport after obtaining a full-fee passport with a limited validity of two years or less. The primary purpose of soliciting the information is to establish citizenship, identity, and entitlement of the applicant to the U.S. passport or related service, and to properly administer and enforce the laws pertaining to the issuance thereof.

Methodology: Passport Services collects information from U.S. citizens and non-citizen nationals when they complete and submit the Application for a U.S. Passport: Name Change, Data Correction, and Limited Passport Book Replacement. Passport applicants can either download the DS–5504 from the internet or obtain one from an Acceptance Facility/Passport Agency. The form must be completed, signed, and submitted along with the applicant's valid U.S. passport and supporting documents for corrective action.

Dated: June 10, 2010.

Brenda Sprague,

Deputy Assistant Secretary for Passport Services, Bureau of Consular Affairs, Department of State.

[FR Doc. 2010–14913 Filed 6–18–10; 8:45 am]

BILLING CODE 4710–06–P

DEPARTMENT OF STATE

[Public Notice 7060]

60-Day Notice of Proposed Information Collection: Form DS–82, Application for a U.S. Passport by Mail, OMB Control Number 1405–0020

ACTION: Notice of request for public comments.

SUMMARY: The Department of State is seeking Office of Management and Budget (OMB) approval for the information collection described below. The purpose of this notice is to allow 60 days for public comment in the **Federal Register** preceding submission to OMB. We are conducting this process in accordance with the Paperwork Reduction Act of 1995.

• *Title of Information Collection:* Application For A U.S. Passport By Mail.

• *OMB Control Number:* 1405–0020.

• *Type of Request:* Revision of a Currently Approved Collection.

• *Originating Office:* Bureau of Consular Affairs, Passport Services CA/PPT.

• *Form Number:* DS–82.

• *Respondents:* Individuals or Households.

• *Estimated Number of Respondents:* 4.2 million respondents per year.

• *Estimated Number of Responses:* 4.2 million responses per year.

• *Average Hours per Response:* 40 minutes.

• *Total Estimated Burden:* 2,800,000 hours per year.

• *Frequency:* On occasion.

• *Obligation to Respond:* Required to Obtain or Retain a Benefit.

DATES: The Department will accept comments from the public up to 60 days from June 21, 2010.

ADDRESSES:

You may submit comments by any of the following methods:

• *E-mail: PPT-Forms-Officer@state.gov.*

• *Mail (paper, disk, or CD–ROM submissions):* Passport Forms Management Officer, U.S. Department of State, Office of Program Management and Operational Support, 2100 Pennsylvania Avenue, NW., Room 3031, Washington, DC 20037.

You must include the DS form number (if applicable), information collection title, and OMB control number in any correspondence.

FOR FURTHER INFORMATION CONTACT: Direct requests for additional information regarding the collection listed in this notice, including requests for copies of the proposed information collection and supporting documents, to Passport Forms Management Officer, U.S. Department of State, Office of Program Management and Operational Support, 2100 Pennsylvania Avenue, NW., Room 3031, Washington, DC 20037, who may be reached on 202–663–2457 or at *PPT-Forms-Officer@state.gov.*

SUPPLEMENTARY INFORMATION:

We are soliciting public comments to permit the Department to:

• Evaluate whether the proposed information collection is necessary for the proper performance of our functions.

• Evaluate the accuracy of our estimate of the burden of the proposed collection, including the validity of the methodology and assumptions used.

• Enhance the quality, utility, and clarity of the information to be collected.

• Minimize the reporting burden on those who are to respond, including the use of automated collection techniques or other forms of technology.

Abstract of proposed collection:

The information collected on the DS–82 is used to facilitate the issuance of passports to U.S. citizens and nationals. The primary purpose of soliciting the information is to establish citizenship, identity, and entitlement to the issuance of the U.S. passport or related service, and to properly administer and enforce the laws pertaining to the issuance thereof.

Methodology:

Passport Services collects information from U.S. citizens and non-citizen nationals when they complete and submit the Application for a U.S. Passport by Mail. Passport applicants can either download the DS–82 from the internet or obtain one from an Acceptance Facility/Passport Agency. The form must be completed, signed, and submitted along with the applicant's previous U.S. passport.

Dated: June 14, 2010.

Florence Fultz,

Acting Deputy Assistant Secretary for Passport Services, Bureau of Consular Affairs, Department of State.

[FR Doc. 2010–14919 Filed 6–18–10; 8:45 am]

BILLING CODE 4710–06–P

DEPARTMENT OF STATE

[Public Notice 7062]

60-Day Notice of Proposed Information Collection: 60-Day Notice of Proposed Information Collection: DS 4079, Request for Determination of Possible Loss of United States Citizenship, (No.1405–0178)

ACTION: Notice of request for public comments.

SUMMARY: The Department of State is seeking Office of Management and Budget (OMB) approval for the information collection described below. The purpose of this notice is to allow 60 days for public comment in the **Federal Register** preceding submission to OMB. We are conducting this process in accordance with the Paperwork Reduction Act of 1995.

• *Title of Information Collection:* Request for Determination of Possible Loss of United States Citizenship.

- *OMB Control Number:* No. 1405–0178.
- *Type of Request:* Revision.
- *Originating Office:* Bureau of Consular Affairs, Overseas Citizens Services (CA/OCS).
- *Form Number:* DS–4079.
- *Respondents:* United States Citizens.
- *Estimated Number of Respondents:* 1,132.
- *Estimated Number of Responses:* 1,132.
- *Average Hours per Response:* 15 minutes.
- *Total Estimated Burden:* 283 hours.
- *Frequency:* On occasion.
- *Obligation To Respond:* Required to obtain or retain benefits.

DATES: The Department will accept comments from the public up to 60 days from June 21, 2010.

ADDRESSES: You may submit comments by any of the following methods:

- *E-mail: ASKPRI@state.gov.*
- *Internet: http://www.regulations.gov.*
- *Mail (paper, disk, or CD–ROM submissions):* U.S. Department of State, CA/OCS/PRI, SA–29, 4th Floor, Washington, DC 20520.
- *Fax:* 202–736–9111.
- *Hand Delivery or Courier:* U.S. Department of State, CA/OCS/PRI, 2100 Pennsylvania Avenue, 4th Floor, Washington, DC 20037.

You must include the DS form number (if applicable), information collection title, and OMB control number in any correspondence.

FOR FURTHER INFORMATION CONTACT: Direct requests for additional information regarding the collection listed in this notice, including requests for copies of the proposed information collection and supporting documents, to Derek A. Rivers, Bureau of Consular Affairs, Overseas Citizens Services (CA/OCS/PRI), U.S. Department of State, SA–29, 4th Floor, Washington, DC 20520, who may be reached on (202) 647–3117 or *ASKPRI@state.gov.*

SUPPLEMENTARY INFORMATION:

We are soliciting public comments to permit the Department to:

- Evaluate whether the proposed information collection is necessary for the proper performance of our functions.
- Evaluate the accuracy of our estimate of the burden of the proposed collection, including the validity of the methodology and assumptions used.
- Enhance the quality, utility, and clarity of the information to be collected.
- Minimize the reporting burden on those who are to respond, including the use of automated collection techniques or other forms of technology.

Abstract of proposed collection: The purpose of the DS–4079 questionnaire is to determine current citizenship status and the possibility of loss of United States citizenship. The information provided assists consular officers and the Department of State in determining if the U.S. citizen has lost his or her nationality by voluntarily performing an expatriating act with the intention of relinquishing United States nationality.

Methodology: The information is collected in person, by fax, or via mail. The Bureau of Consular Affairs is currently exploring options to make this information collection available electronically.

Dated: June 2, 2010.

Mary Ellen Hickey,

Managing Director, Overseas Citizens Services, Department of State.

[FR Doc. 2010–14922 Filed 6–18–10; 8:45 am]

BILLING CODE 4710–06–P

DEPARTMENT OF STATE

[Public Notice: 7063]

60-Day Notice of Proposed Information Collection: Form DS–4085 Application for Additional Visa Pages or Miscellaneous Passport Services, OMB Control Number 1405–0159

ACTION: Notice of request for public comments.

SUMMARY: The Department of State is seeking Office of Management and Budget (OMB) approval for the information collection described below. The purpose of this notice is to allow 60 days for public comment in the **Federal Register** preceding submission to OMB. We are conducting this process in accordance with the Paperwork Reduction Act of 1995.

- *Title of Information Collection:* Application for Additional Visa Pages or Miscellaneous Passport Services.
- *OMB Control Number:* 1405–0159.
- *Type of Request:* Revision of a Currently Approved Collection.
- *Originating Office:* Bureau of Consular Affairs, Passport Services CA/PPT.
- *Form Number:* DS–4085.
- *Respondents:* Individuals or Households.
- *Estimated Number of Respondents:* 146,000 respondents per year.
- *Estimated Number of Responses:* 146,000 responses per year.
- *Average Hours per Response:* 20 minutes.
- *Total Estimated Burden:* 48,700 hours per year.
- *Frequency:* On occasion.
- *Obligation to Respond:* Required to Obtain or Retain a Benefit.

DATES: The Department will accept comments from the public up to 60 days from June 21, 2010.

ADDRESSES: You may submit comments by any of the following methods:

- *E-mail: PPT–Forms-Officer@state.gov.*
- *Mail (paper, disk, or CD–ROM submissions):* Passport Forms Management Officer, U.S. Department of State, Office of Program Management and Operational Support, 2100 Pennsylvania Avenue NW., Room 3031, Washington, DC 20037.

You must include the DS form number (if applicable), information collection title, and OMB control number in any correspondence.

FOR FURTHER INFORMATION CONTACT: Direct requests for additional information regarding the collection listed in this notice, including requests for copies of the proposed information collection and supporting documents, to Passport Forms Management Officer, U.S. Department of State, Office of Program Management and Operational Support, 2100 Pennsylvania Avenue NW., Room 3031, Washington, DC 20037, who may be reached on 202–663–2457 or at *PPT–Forms-Officer@state.gov.*

SUPPLEMENTARY INFORMATION: We are soliciting public comments to permit the Department to:

- Evaluate whether the proposed information collection is necessary for the proper performance of our functions.
- Evaluate the accuracy of our estimate of the burden of the proposed collection, including the validity of the methodology and assumptions used.
- Enhance the quality, utility, and clarity of the information to be collected.
- Minimize the reporting burden on those who are to respond, including the use of automated collection techniques or other forms of technology.

Abstract of proposed collection: The information collected on the DS–4085 is used to facilitate the issuance of additional visa pages to valid U.S. passports. The primary purpose of soliciting the information is to establish citizenship, identity, and entitlement of the applicant to the U.S. passport or related service, and to properly administer and enforce the laws pertaining to the issuance thereof.

Methodology: Passport Services collects information from U.S. citizens and non-citizen nationals when they complete and submit the Application

for Additional Visa Pages or Miscellaneous Passport Services. Passport applicants can either download the DS–4085 from the internet or obtain one from an Acceptance Facility/ Passport Agency. The form must be completed, signed, and submitted along with the applicant's valid U.S. passport.

Dated: June 14, 2010.

Florence Fultz,

Acting Deputy Assistant Secretary for Passport Services, Bureau of Consular Affairs, Department of State.

[FR Doc. 2010–14923 Filed 6–18–10; 8:45 am]

BILLING CODE 4710–06–P

DEPARTMENT OF STATE

[Public Notice 7061]

60-Day Notice of Proposed Information Collection: Form DS–11 Application for a U.S. Passport, OMB Control Number 1405–0004

ACTION: Notice of request for public comments.

SUMMARY: The Department of State is seeking Office of Management and Budget (OMB) approval for the information collection described below. The purpose of this notice is to allow 60 days for public comment in the **Federal Register** preceding submission to OMB. We are conducting this process in accordance with the Paperwork Reduction Act of 1995.

- *Title of Information Collection:* Application for a U.S. Passport.
- *OMB Control Number:* 1405–0004.
- *Type of Request:* Revision of a Currently Approved Collection.
- *Originating Office:* Bureau of Consular Affairs, Passport Services CA/ PPT.
- *Form Number:* DS–11.
- *Respondents:* Individuals or Households.
- *Estimated Number of Respondents:* 12.5 million respondents per year.
- *Estimated Number of Responses:* 12.5 million responses per year.
- *Average Hours Per Response:* 85 minutes.
- *Total Estimated Burden:* 17,708,300 per year.
- *Frequency:* On occasion.
- *Obligation to Respond:* Required to Obtain or Retain a Benefit.

DATES: The Department will accept comments from the public up to 60 days from June 21, 2010.

ADDRESSES:

You may submit comments by any of the following methods:

- *E-mail: PPT-Forms-Officer@state.gov.*
- *Mail (paper, disk, or CD–ROM submissions):* Passport Forms Management Officer, U.S. Department of State, Office of Program Management and Operational Support, 2100 Pennsylvania Avenue NW., Room 3031, Washington, DC 20037.

You must include the DS form number (if applicable), information collection title, and OMB control number in any correspondence.

FOR FURTHER INFORMATION CONTACT: Direct requests for additional information regarding the collection listed in this notice, including requests for copies of the proposed information collection and supporting documents, to Passport Forms Management Officer, U.S. Department of State, Office of Program Management and Operational Support, 2100 Pennsylvania Avenue NW., Room 3031, Washington, DC 20037, who may be reached on 202–663–2457 or at *PPT-Forms-Officer@state.gov.*

SUPPLEMENTARY INFORMATION:

We are soliciting public comments to permit the Department to:

- Evaluate whether the proposed information collection is necessary for the proper performance of our functions.
- Evaluate the accuracy of our estimate of the burden of the proposed collection, including the validity of the methodology and assumptions used.
- Enhance the quality, utility, and clarity of the information to be collected.
- Minimize the reporting burden on those who are to respond, including the use of automated collection techniques or other forms of technology.

Abstract of proposed collection:

The information collected on the DS–11 is used to facilitate the issuance of passports to U.S. citizens and nationals. The primary purpose of soliciting the information is to establish citizenship, identity, and entitlement to the issuance of the U.S. passport or related service, and to properly administer and enforce the laws pertaining to the issuance thereof.

Methodology:

Passport Services collects information from U.S. citizens and non-citizen nationals when they complete and submit the Application for a U.S. Passport. Passport applicants can either download the DS–11 from the internet or obtain one from an Acceptance Facility/Passport Agency. The form must be completed, executed at an acceptance facility or passport agency, and submitted with evidence of citizenship and identity.

Dated: June 14, 2010.

Florence Fultz,

Acting Deputy Assistant Secretary for Passport Services, Bureau of Consular Affairs, Department of State.

[FR Doc. 2010–14921 Filed 6–18–10; 8:45 am]

BILLING CODE 4710–06–P

DEPARTMENT OF STATE

[Public Notice 7059]

60-Day Notice of Proposed Information Collection: Form DS–3053, Statement of Consent or Special Circumstances: Issuance of a Passport to a Minor Under Age 16, OMB Control Number 1405–0129

ACTION: Notice of request for public comments.

SUMMARY: The Department of State is seeking Office of Management and Budget (OMB) approval for the information collection described below. The purpose of this notice is to allow 60 days for public comment in the **Federal Register** preceding submission to OMB. We are conducting this process in accordance with the Paperwork Reduction Act of 1995.

- *Title of Information Collection:* Statement of Consent or Special Circumstances: Issuance of a Passport to a Minor Under Age 16.
- *OMB Control Number:* 1405–0129.
- *Type of Request:* Revision of a Currently Approved Collection.
- *Originating Office:* Bureau of Consular Affairs, Passport Services CA/ PPT.
- *Form Number:* DS–3053.
- *Respondents:* Individuals or Households.
- *Estimated Number of Respondents:* 1,025,000 respondents per year.
- *Estimated Number of Responses:* 1,025,000 responses per year.
- *Average Hours Per Response:* 1 Hour.
- *Total Estimated Burden:* 1,025,000 hours per year.
- *Frequency:* On occasion.
- *Obligation to Respond:* Required to Obtain or Retain a Benefit.

DATES: The Department will accept comments from the public up to 60 days from June 21, 2010.

ADDRESSES:

You may submit comments by any of the following methods:

- *E-mail: PPT-Forms-Officer@state.gov.*
- *Mail (paper, disk, or CD–ROM submissions):* Passport Forms Management Officer, U.S. Department of State, Office of Program Management

and Operational Support, 2100 Pennsylvania Avenue, NW., Room 3031, Washington, DC 20037.

You must include the DS form number (if applicable), information collection title, and OMB control number in any correspondence.

FOR FURTHER INFORMATION CONTACT: Direct requests for additional information regarding the collection listed in this notice, including requests for copies of the proposed information collection and supporting documents, to Passport Forms Management Officer, U.S. Department of State, Office of Program Management and Operational Support, 2100 Pennsylvania Avenue, NW., Room 3031, Washington, DC 20037, who may be reached on 202–663–2457 or at *PPT-Forms-Officer@state.gov.*

SUPPLEMENTARY INFORMATION:

We are soliciting public comments to permit the Department to:

- Evaluate whether the proposed information collection is necessary for the proper performance of our functions.
- Evaluate the accuracy of our estimate of the burden of the proposed collection, including the validity of the methodology and assumptions used.
- Enhance the quality, utility, and clarity of the information to be collected.
- Minimize the reporting burden on those who are to respond, including the use of automated collection techniques or other forms of technology.

Abstract of proposed collection:

The information collected on the DS–3053 is used to facilitate the issuance of passports to U.S. citizens and nationals under the age of 16. The primary purpose of soliciting the information is to ensure that both parents and/or all guardians consent to the issuance of a passport to a minor under age 16, except where one parent has sole custody or there are exigent or special family circumstances.

Methodology:

Passport Services collects information from U.S. citizens and non-citizen nationals when they complete and submit the Statement of Consent or Special Circumstances: Issuance of a Passport to a Minor under Age 16. Passport applicants can either download the DS–3053 from the Internet or obtain one from an Acceptance Facility/Passport Agency. The form must be completed, signed, and submitted along with the applicant's DS–11, Application for a U.S. Passport.

Dated: June 10, 2010.

Brenda Sprague,

Deputy Assistant Secretary for Passport Services, Bureau of Consular Affairs, Department of State.

[FR Doc. 2010–14916 Filed 6–18–10; 8:45 am]

BILLING CODE 4710–06–P

DEPARTMENT OF STATE

[Public Notice 7065]

Intergovernmental Panel on Climate Change Special Report Review

ACTION: The United States Global Change Research and Climate Change Technology Programs request expert review of the Special Report on Renewable Energy Sources and Climate Change Mitigation (SRREN) of the Intergovernmental Panel on Climate Change (IPCC).

SUMMARY: The IPCC was established as an intergovernmental body under the auspices of the United Nations Environment Programme (UNEP) and the World Meteorological Organization (WMO) in 1988. In accordance with its mandate and as reaffirmed in various decisions by the Panel, the major activity of the IPCC is to prepare comprehensive and up-to-date assessments of policy-relevant scientific, technical, and socio-economic information for understanding the scientific basis of climate change, potential impacts, and options for mitigation and adaptation. More information about the IPCC can be found at *http://www.ipcc.ch.*

The IPCC develops a comprehensive assessment spanning all the above topics approximately every six years. In addition to these comprehensive assessments, the IPCC periodically develops Special Reports on specific topics. Preparation of Special Reports follows the same procedures as for the Assessment Reports. Governments develop and approve plans for reports, and nominate scientists and experts as lead authors and reviewers. Authors prepare the reports, which go through several stages of review, following which they are accepted by member governments at a session of the IPCC. Member governments also approve the executive summaries of the reports (known as a "summary for policy makers") in detail at the time that they accept the overall report. Principles and procedures for the IPCC and its preparation of reports can be found at the following Web sites (*http://www.ipcc.ch/pdf/ipcc-principles/ipcc-principles.pdf; http://www.ipcc.ch/organization/organization_procedures.htm*).

In April 2008, the IPCC approved the development of a Special Report on Renewable Energy Sources and Climate Change Mitigation (SRREN). The SRREN is being developed under the leadership of the IPCC Working Group III. This Special Report aims to provide a better understanding and broader information on the mitigation potential of renewable energy sources. More information on the report can be found at: *http://www.ipcc-wg3.de/publications/special-reports.*

All IPCC reports go through two broad reviews: A "first-order draft" for experts, and a "second-order draft" for experts and governments. The IPCC Secretariat has informed the U.S. Department of State that the second-order draft of the SRREN is available for expert and government review. The report is structured with technology chapters—bio-energy, direct solar energy, geothermal energy, hydropower, ocean energy and wind energy—which feed into overarching chapters. A system integration chapter brings different aspects of energy demand and supply together. The report also considers the policy options, outcomes and conditions for effectiveness, and how accelerated deployment could be achieved in a sustainable manner. Capacity building, technology transfer and financing in different regions are also assessed.

As part of the U.S. Government Review of the SRREN, the U.S. Government is soliciting comments from experts in relevant fields of expertise. The Global Change Research Program and Climate Change Technology Program Offices will coordinate collection of U.S. expert comments and the review of the report by panels of Federal scientists and program managers in order to develop a consolidated U.S. Government submission. Expert comments received within the comment period will be considered for inclusion in the U.S. Government submission. Instructions for review and submission of comments are available at *http://www.globalchange.gov/srrenreview.*

To be considered for inclusion in the U.S. Government collation, comments must be received by midnight July 18th, 2010. Comments submitted for consideration as part of the U.S. Government Review should be reserved for that purpose, and not also sent to the IPCC Secretariat as a discrete set of expert comments. Comments should be submitted using the Web-based system at: *http://www.globalchange.gov/srrenreview.*

For further information, please contact David Allen, U.S. Global Change Research Program, Suite 250, 1717 Pennsylvania Ave., NW., Washington, DC 20006 (*http://www.climatescience.gov*).

Dated: June 16, 2010.

Trigg Talley,

Office Director, Office of Global Change, Department of State.

[FR Doc. 2010–14908 Filed 6–18–10; 8:45 am]

BILLING CODE 4710–09–P

DEPARTMENT OF STATE

[Public Notice 7066]

Announcement of Meetings of the International Telecommunication Advisory Committee

Summary: This notice announces meetings of the International Telecommunication Advisory Committee (ITAC) to start preparations for the 2010 Plenipotentiary Conference of the International Telecommunication Union (ITU) and the 2011 ITU Radiocommunication Sector (ITU–R) World Radiocommunication Conference Preparatory Meeting.

The ITAC will meet to begin preparation of advice for the U.S. government on the 2010 ITU Plenipotentiary Conference (Guadalajara, Mexico) on Thursday July 8, 2010, 2–4 p.m. Eastern Daylight Time, at 1120 20th Street, Washington, DC 20036. There will also be reports on recent meetings at ITU and OAS/CITEL (*e.g.* Study Group meetings, the ITU World Telecommunication Development Conference). For those people outside the Washington, DC metro area, a conference bridge will be provided.

The ITAC will meet to begin preparation of advice for the U.S. government on the 2011 ITU–R World Radiocommunication Conference Preparatory Meeting on Wednesday, August 11, 2010, 2–4 p.m. Eastern Daylight Time, at 1200 Wilson Boulevard, Arlington, VA 22209. For those people outside the Washington, DC metro area, a conference bridge will be provided. People expecting to attend this meeting in person should advise the Department of State at *najarianpb@state.gov* or 202 647–7847.

These meetings are open to the public as seating capacity allows. The public will have an opportunity to provide comments at this meeting. People desiring further information on these meetings or wishing to request reasonable accommodation may contact the Secretariat at *minardje@state.gov* or 202 647–5205.

Dated: June 14, 2010.

Cecily C. Holiday,

International Communications & Information Policy, U.S. Department of State.

[FR Doc. 2010–14911 Filed 6–18–10; 8:45 am]

BILLING CODE 4710–07–P

DEPARTMENT OF TRANSPORTATION

Federal Aviation Administration

Approval of Noise Compatibility Program for Buckeye Municipal Airport, Town of Buckeye, AZ

AGENCY: Federal Aviation Administration, DOT.

ACTION: Notice.

SUMMARY: The Federal Aviation Administration (FAA) announces its findings on the noise compatibility program submitted by the Town of Buckeye under the provisions of 49 U.S.C. 47501 *et seq.* (formerly the Aviation Safety and Noise Abatement Act, hereinafter referred to as "the Act") and 14 Code of Federal Regulations (CFR) Part 150 (hereinafter referred to as "Part 150"). On September 22, 2008, the FAA determined that the noise exposure maps submitted by the Town of Buckeye under Part 150 were in compliance with applicable requirements. On May 13, 2010, the FAA approved the Buckeye Municipal Airport noise compatibility program. All of the recommendations of the program were approved.

DATES: *Effective Date:* The effective date of the FAA's approval of the Noise Compatibility Program for Buckeye Municipal Airport is May 13, 2010.

FOR FURTHER INFORMATION CONTACT: Ruben Cabalbag, Acting Manager, Los Angeles Airports District Office, Room 3000, 15000 Aviation Boulevard, Lawndale, CA 90261, (310) 725–3621. Documents reflecting this FAA action may be reviewed at this same location.

SUPPLEMENTARY INFORMATION: This notice announces that the FAA has given its overall approval to the Noise Compatibility Program for Buckeye Municipal Airport, effective May 13, 2010.

Under section 47504 of the Act, an airport operator who has previously submitted a Noise Exposure Map may submit to the FAA a Noise Compatibility Program which sets forth the measures taken or proposed by the airport operator for the reduction of existing non-compatible land uses and prevention of additional non-compatible land uses within the area covered by the Noise Exposure Maps. The Act requires such programs to be developed in consultation with interested and affected parties including local communities, government agencies, airport users, and FAA personnel.

Each airport noise compatibility program developed in accordance with Part 150 is a local program, not a Federal program. The FAA does not substitute its judgment for that of the airport proprietor with respect to which measures should be recommended for action. The FAA's approval or disapproval of Part 150 program recommendations is measured according to the standards expressed in Part 150 and the Act and is limited to the following determinations:

a. The Noise Compatibility Program was developed in accordance with the provisions and procedures of Part 150;

b. Program measures are reasonably consistent with achieving the goals of reducing existing non-compatible land uses around the airport and preventing the introduction of additional non-compatible land uses;

c. Program measures would not create an undue burden on interstate or foreign commerce, unjustly discriminate against types or classes of aeronautical uses, violate the terms of airport grant agreements, or intrude into areas preempted by the Federal Government; and

d. Program measures relating to the use of flight procedures can be implemented within the period covered by the program without derogating safety, adversely affecting the efficient use and management of the navigable airspace and air traffic control systems, or adversely affecting other powers and responsibilities of the Administrator prescribed by law.

Specific limitations with respect to FAA's approval of an airport noise compatibility program are delineated in Part 150, section 150.5. Approval is not a determination concerning the acceptability of land uses under Federal, State, or local law. Approval does not by itself constitute an FAA implementing action. A request for Federal action or approval to implement specific noise compatibility measures may be required. Prior to an FAA decision on a request to implement the action, an environmental review of the proposed action may be required. Approval does not constitute a commitment by the FAA to financially assist in the implementation of the program nor a determination that all measures covered by the program are eligible for grant-in-aid funding from the FAA under applicable law contained in Title 49

U.S.C. Where Federal funding is sought, requests for project grants must be submitted to the FAA Los Angeles Airports District Office in Hawthorne, California.

The Town of Buckeye submitted to the FAA the noise exposure maps, descriptions, and other documentation produced during the noise compatibility study. The Buckeye Municipal Airport noise exposure maps were determined by the FAA to be in compliance with applicable requirements on September 22, 2008. Notice of this determination was published in the **Federal Register** on February 25, 2009, Volume 74, Number 36, Page 8612.

The Buckeye Municipal Airport study contains a proposed noise compatibility program comprised of actions designed for phased implementation by airport management and adjacent jurisdictions. It was requested that the FAA evaluate and approve this material as a Noise Compatibility Program as described in section 47504 of the Act. The FAA began its review of the program on December 4, 2009, and was required by a provision of the Act to approve or disapprove the program within 180 days (other than the use of new or modified flight procedures for noise control). Failure to approve or disapprove such program within the 180-day period shall be deemed to be an approval of such program.

The submitted program contained five proposed actions for noise abatement, noise mitigation, land use planning and program management on and off the airport. The FAA completed its review and determined that the procedural and substantive requirements of the Act and Part 150 have been satisfied. The overall program was approved by the FAA, effective May 13, 2010.

Outright approval was granted for five of specific program measures. The approved measures include such items as: Developing a pilot and community outreach program; Developing project review guidelines for development of proposals within the Public Airport Disclosure Area: Town of Buckeye to discourage re-zoning of parcels near the airport that would allow more than one dwelling unit per acre; Update noise exposure maps and noise compatibility programs; Oversee implementation of the Part 150 Noise Compatibility Program.

These determinations are set forth in detail in a Record of Approval signed by the Western-Pacific Region Airports Division Manager on May 13, 2010. The Record of Approval, as well as other evaluation materials and the documents comprising the submittal, are available for review at the FAA office listed above and at the administrative offices of the Town of Buckeye. The Record of Approval also will be available online at: *http://www.faa.gov/airports/environmental/airport_noise/part_150/states/.*

Issued in Hawthorne, California on June 8, 2010.

Debbie Roth,

Acting Manager, Airports Division, Western-Pacific Region, AWP–600.

[FR Doc. 2010–14971 Filed 6–18–10; 8:45 am]

BILLING CODE 4910–13–P

DEPARTMENT OF TRANSPORTATION

Federal Transit Administration

[Docket No. FTA–2009–0002]

Notice of Buy America Waiver for Minivans and Minivan Chassis

AGENCY: Federal Transit Administration (FTA), DOT.

ACTION: Notice of Buy America Waiver.

SUMMARY: In response to formal requests from El Dorado National, Kansas, and Chrysler Group LLC, and informal requests from several other parties, and based on the fact that no manufacturer has identified itself as willing and able to supply minivans or minivan chassis that are assembled in the United States, the Federal Transit Administration hereby waives its Buy America final assembly requirement for minivans and minivan chassis. This waiver is valid until such time as a domestic source becomes available.

FOR FURTHER INFORMATION CONTACT: For questions please contact Jayme L. Blakesley at (202) 366–0304 or *jayme.blakesley@dot.gov.*

SUPPLEMENTARY INFORMATION:

El Dorado National, Kansas ("El Dorado") asked the Federal Transit Administration ("FTA") to waive its Buy America requirements, on the basis of non-availability, for minivan chassis manufactured and assembled by Chrysler in Ontario, Canada. El Dorado uses Chrysler minivan chassis to manufacture its Amerivan lowered-floor minivans. In its request for a waiver, El Dorado asserts that General Motors and Chrysler minivan chassis, including those used on the Chevrolet Uplander, Pontiac Montana, Buick Terraza, Saturn Relay, Chrysler Town & Country, and Dodge Grand Caravan, are no longer manufactured in the United States. El Dorado manufactures its product by purchasing Chrysler minivan chassis, replacing the floor, installing wheelchair securement equipment, and adding a ramp to the side door. According to El Dorado, in 2008 General Motors and Chrysler stopped manufacturing minivans in the United States. The absence of a domestic source for minivan chassis has severely impacted El Dorado; 75% of its sales are to FTA grantees.

By subsequent letter dated March 5, 2010, the Chrysler Group LLC ("Chrysler") requested a public interest waiver of the final assembly requirements for minivans and minivan chassis. According to Chrysler, minivans are no longer available from a domestic source—Chrysler closed its St. Louis final assembly facility in 2008; Honda has declined to make its minivans eligible for purchase with FTA funds; Nissan may change its final assembly location from the United States to Japan; and Toyota has not responded to public procurements.[1]

In addition to the requests from El Dorado and Chrysler, FTA has received many inquiries from its grantees about the non-availability of minivans from a domestic source. According to these grantees, minivans are no longer available from a source that is willing or able to comply with FTA's Buy America requirements.

With certain exceptions, FTA's "Buy America" requirements prevent FTA from obligating an amount that may be appropriated to carry out its program for a project unless "the steel, iron, and manufactured goods used in the project are produced in the United States." 49 U.S.C. 5323(j)(1). One such exception is if "the steel, iron, and goods produced in the United States are not produced in a sufficient and reasonably available amount or are not of a satisfactory quality." 49 U.S.C. 5323(j)(2)(B). In the case of a specific procurement, FTA presumes that the conditions exist to a waiver if no responsive and responsible bid is received offering an item produced in the United States. For requests that will affect an entire industry, FTA will not waive its Buy America requirements until it can ascertain whether the item truly is not available from a domestic source.

In order to verify El Dorado's assertion that minivans and minivan chassis are not available from a

[1] Contrary to Chrysler's assertion that Toyota has not responded to public procurements, in May 2010 FTA learned that Toyota may have certified compliance with the Buy America requirements when it supplied minivans to a transit provider. FTA attempted to communicate with Toyota by letter, e-mail, and telephone to determine whether Toyota is willing and able to supply Buy America-compliant minivans. Toyota has not responded. Therefore, until such time as Toyota can document its willingness and ability to comply with FTA's Buy America requirements, Toyota minivans will not be eligible for purchase with FTA funds.

domestic source, on April 2, 2009, FTA published a notice in the Federal Register seeking public comment. Unlike with public interest waivers, FTA is not required to publish a notice in the **Federal Register** before waiving its Buy America requirements on the basis of non-availability. In this instance, however, FTA proceeded with an abundance of caution because a non-availability waiver would have a national impact. In order to understand completely the facts surrounding the El Dorado's request, FTA asked for comment from all interested parties regarding the availability of domestically manufactured minivans and minivan chassis.

Approximately three dozen parties responded to FTA's notice by submitting comments to the Docket, including vehicle manufacturers, transit service providers, transit agencies, cities, counties, metropolitan planning organizations, transportation associations, and state departments of transportation. The overwhelming majority of comments expressed support for a waiver, recognizing the fact that minivans are not available from a domestic source. One commenter asked for additional information. Three parties opposed a waiver. Of note, FTA received comments from a direct competitor to El Dorado—the Braun Corporation—and two minivan manufacturers—Chrysler and Honda. With the exception of Honda, all parties confirmed El Dorado's assertion that minivans and minivan chassis are not available from a domestic source. Toyota, Nissan and other minivan manufacturers did not submit comments.

In a short, three-paragraph comment dated June 11, 2009, Honda indicated that it manufactures its Odyssey LX model minivan in Lincoln, Alabama, and asserted that it complies with FTA's Buy America domestic content and final assembly requirements. However, after several months of correspondence with FTA, Honda declined to make its minivans available for procurement by FTA grantees based on concerns about the disclosure of detailed cost information. Thus, while Honda claims that its Odyssey model minivan meets the domestic content and final assembly requirements of FTA's regulations, FTA grantees would still be precluded from purchasing the Odyssey because Honda is unwilling to comply with FTA's pre-award/post-delivery audit requirements.

Of the many comments favoring a waiver, most expressed support only because minivans are not, in fact, available from a domestic source. Several commenters noted their desire to see minivan production return to the United States. FTA shares this desire. FTA regrets the fact that Chrysler elected to close its St. Louis final assembly facility and that other manufacturers of minivans have decided not to make their vehicles available for purchase with FTA funds.

The above reservations notwithstanding, the fact remains—minivans and minivan chassis are not available from a domestic source. Therefore, after careful consideration, and based on the fact that no manufacturer has identified itself as willing and able to supply minivans or minivan chassis that are assembled in the United States, FTA hereby waives its Buy America final assembly requirement of 49 CFR 661.11 for all minivans and minivan chassis, regardless of manufacturer. Minivan manufacturers will need to comply with FTA's domestic content requirement as well as the pre-award and post-delivery audit requirements of 49 CFR part 663. This waiver is valid until such time as a domestic source, as verified by FTA, becomes available.

Issued this 15th day of June, 2010.

Dorval R. Carter, Jr.,

Chief Counsel.

[FR Doc. 2010–14992 Filed 6–18–10; 8:45 am]

BILLING CODE 4910–57–P

DEPARTMENT OF TRANSPORTATION

Federal Highway Administration

New York State Department of Transportation (NYSDOT); Environmental Impact Statement: Monroe County, New York

AGENCY: Federal Highway Administration (FHWA), DOT.

ACTION: Revised Notice of Intent.

SUMMARY: The FHWA is issuing this revised notice to advise the public that FHWA and NYSDOT will not be preparing an Environmental Impact Statement (EIS) for the proposed improvements to extend Route 531 in the Towns of Ogden and Sweden, Monroe County, New York (NYSDOT Project Identification Number: 4531.05). A Notice of Intent to prepare an EIS was published in the **Federal Register** on January 14, 2005.

FOR FURTHER INFORMATION CONTACT: Jeffrey W. Kolb, Division Administrator, Federal Highway Administration, New York Division, Leo W. O'Brien Federal Building, 9th Floor, Clinton Avenue and North Pearl Street, Albany, New York 12207, *Telephone:* (518) 431–4127.

Or

Robert A. Traver, Acting Regional Director, New York State Department of Transportation Region 4; 1530 Jefferson Road, Rochester, New York 14623, *Telephone:* (585) 272–3310.

SUPPLEMENTARY INFORMATION: The FHWA, in cooperation with the New York State Department of Transportation (NYSDOT) will not prepare an EIS as previously intended on a proposal to extend Route 531 in Monroe County, New York. The purpose of the Route 531 Extension study was to develop improvements to the 6.5 mile long corridor that could provide for the existing and projected traffic demand and to address highway safety. During the scoping phase of the project however, the results of traffic studies and accident analysis indicated that future Route 31 traffic will operate at capacity during the commuter peak. As such, most of the traffic problems, other than those at the current Route 531 terminus with Route 36, will not occur until 15 years or more in the future. The study indicated that few highway improvements are required other than addressing the Route 531 terminus and identified safety issues within the study area. The improvements being considered will not have a significant impact on the environment and will be progressed as Categorical Exclusion(s).

(Catalog of Federal Domestic Assistance Program Number 20.205, Highway Planning and Construction. The regulations implementing Executive Order 12372 regarding intergovernmental consultation on Federal programs and activities apply to this program.)

Authority: 23 U.S.C. 315; 23 CFR 771.123.

Issued on: June 10, 2010.

Jeffrey W. Kolb,

Division Administrator, Federal Highway Administration, Albany, New York.

[FR Doc. 2010–14863 Filed 6–18–10; 8:45 am]

BILLING CODE 4910–22–M

DEPARTMENT OF TRANSPORTATION

Federal Motor Carrier Safety Administration

Sunshine Act Meetings; Unified Carrier Registration Plan Board of Directors

AGENCY: Federal Motor Carrier Safety Administration (FMCSA), DOT.

TIME AND DATE: July 8, 2010, 12 noon to 3 p.m., Eastern Daylight Time.

PLACE: This meeting will take place telephonically. Any interested person may call Mr. Avelino Gutierrez at (505) 827–4565 to receive the toll free number and pass code needed to participate in this meeting by telephone.

STATUS: Open to the public.

MATTERS TO BE CONSIDERED: The Unified Carrier Registration Plan Board of Directors (the Board) will continue its work in developing and implementing the Unified Carrier Registration Plan and Agreement and to that end, may consider matters properly before the Board.

FOR FURTHER INFORMATION CONTACT: Mr. Avelino Gutierrez, Chair, Unified Carrier Registration Board of Directors at (505) 827–4565.

Issued on: June 16, 2010.

Larry W. Minor,

Associate Administrator for Policy and Program Development.

[FR Doc. 2010–15078 Filed 6–17–10; 4:15 pm]

BILLING CODE 4910–EX–P

DEPARTMENT OF THE TREASURY

Office of Foreign Assets Control

Unblocking of Specially Designated Nationals and Blocked Persons Pursuant to the Foreign Narcotics Kingpin Designation Act

AGENCY: Office of Foreign Assets Control, Treasury.

ACTION: Notice.

SUMMARY: The Department of the Treasury's Office of Foreign Assets Control ("OFAC") is publishing the names of two individuals whose property and interests in property have been unblocked pursuant to the Foreign Narcotics Kingpin Designation Act ("Kingpin Act") (21 U.S.C. 1901–1908, 8 U.S.C. 1182).

DATES: The unblocking and removal from the list of Specially Designated Nationals and Blocked Persons ("SDN list") of the two individuals identified in this notice whose property and interests in property were blocked pursuant to the Kingpin Act, is effective on June 10, 2010.

FOR FURTHER INFORMATION CONTACT: Assistant Director, Compliance Outreach & Implementation, U.S. Department of the Treasury, Office of Foreign Assets Control, Washington, DC 20220, *tel.:* 202/622–2420.

SUPPLEMENTARY INFORMATION:

Electronic and Facsimile Availability. This document and additional information concerning OFAC are available from OFAC's Web site (*http://www.treas.gov/ofac*) via facsimile through a 24-hour fax-on-demand service at (202) 622–0077.

Background. On December 3, 1999, the Kingpin Act was signed into law by the President of the United States. The Kingpin Act provides a statutory framework for the President to impose sanctions against significant foreign narcotics traffickers and their organizations on a worldwide basis, with the objective of denying their businesses and agents access to the U.S. financial system and to the benefits of trade and transactions involving U.S. persons and entities.

The Kingpin Act blocks all property and interests in property, subject to U.S. jurisdiction, that is owned or controlled by significant foreign narcotics traffickers, as identified by the President. In addition, the Secretary of the Treasury consults with the Attorney General, the Director of the Central Intelligence Agency, the Director of the Federal Bureau of Investigation, the Administrator of the Drug Enforcement Administration, the Secretary of Defense, the Secretary of State, and the Secretary of Homeland Security when designating and blocking the property or interests in property, subject to U.S. jurisdiction, of persons or entities found to be: (1) Materially assisting in, or providing financial or technological support for or to, or providing goods or services in support of, the international narcotics trafficking activities of a person designated pursuant to the Kingpin Act; (2) owned, controlled, or directed by, or acting for or on behalf of, a person designated pursuant to the Kingpin Act; and/or (3) playing a significant role in international narcotics trafficking.

On June 10, 2010, OFAC removed from the SDN list the two individuals listed below, whose property and interests in property were blocked pursuant to the Kingpin Act.

1. Carrillo Rodriguez, Luis Miguel, c/o VUELA PERU S.A.C., Lima, Peru; Orion 130, Ventanilla Naval, Callao, Peru; DOB 01 Dec 1961; LE Number 25693716 (Peru) (individual) [SDNTK].

2. Flores Monroy, Julio Cesar (a.k.a. Flores, Julio C.), C. Azteca 0, Col. Azteca, Tijuana, Baja California CP 22000, Mexico; Calle Granito No. 2025, Seccion El Dorado, Fraccionamiento Playas de Tijuana, Tijuana, Baja California, Mexico; Calle Granito No. 602, Seccion El Dorado, Fraccionamiento Playas de Tijuana, Tijuana, Baja California, Mexico; c/o Kontroles Electronicos De Baja California, S.A. DE C.V., Ave. Azueta 11750, Col. Libertad, Tijuana, Baja California CP 22400, Mexico; c/o Accesos Electronicos, S.A. DE C.V., Calle David Alfaro Siqueiros 2789 #201, Col. Zona Rio, Tijuana, Baja California, Mexico; DOB 13 Jul 1944; POB Guadalajara, Jalisco, Mexico; Immigration No. A07268659 (United States) (individual) [SDNTK].

Dated: June 10, 2010.

Adam J. Szubin,

Director, Office of Foreign Assets Control.

[FR Doc. 2010–14503 Filed 6–18–10; 8:45 am]

BILLING CODE 4811–45–P

Federal Register

Monday,
June 21, 2010

Part II

Environmental Protection Agency

40 CFR Parts 257, 261, 264 et al.

Hazardous and Solid Waste Management System; Identification and Listing of Special Wastes; Disposal of Coal Combustion Residuals From Electric Utilities; Proposed Rule

ENVIRONMENTAL PROTECTION AGENCY

40 CFR Parts 257, 261, 264, 265, 268, 271 and 302

[EPA–HQ–RCRA–2009–0640; FRL–9149–4]

RIN–2050–AE81

Hazardous and Solid Waste Management System; Identification and Listing of Special Wastes; Disposal of Coal Combustion Residuals From Electric Utilities

AGENCY: Environmental Protection Agency (EPA).

ACTION: Proposed rule.

SUMMARY: The Environmental Protection Agency (EPA or Agency) is proposing to regulate for the first time, coal combustion residuals (CCRs) under the Resource Conservation and Recovery Act (RCRA) to address the risks from the disposal of CCRs generated from the combustion of coal at electric utilities and independent power producers. However, the Agency is considering two options in this proposal and, thus, is proposing two alternative regulations. Under the first proposal, EPA would reverse its August 1993 and May 2000 Bevill Regulatory Determinations regarding coal combustion residuals (CCRs) and list these residuals as special wastes subject to regulation under subtitle C of RCRA, when they are destined for disposal in landfills or surface impoundments. Under the second proposal, EPA would leave the Bevill determination in place and regulate disposal of such materials under subtitle D of RCRA by issuing national minimum criteria. Under both alternatives EPA is proposing to establish dam safety requirements to address the structural integrity of surface impoundments to prevent catastrophic releases.

EPA is not proposing to change the May 2000 Regulatory Determination for beneficially used CCRs, which are currently exempt from the hazardous waste regulations under Section 3001(b)(3)(A) of RCRA. However, EPA is clarifying this determination and seeking comment on potential refinements for certain beneficial uses. EPA is also not proposing to address the placement of CCRs in mines, or non-minefill uses of CCRs at coal mine sites in this action.

DATES: Comments must be received on or before September 20, 2010. EPA will provide an opportunity for a public hearing on the rule upon request. Requests for a public meeting should be submitted to EPA's Office of Resource Conservation and Recovery by July 21, 2010. *See* the **FOR FURTHER INFORMATION CONTACT** section for contact information. Should EPA receive requests for public meetings within this timeframe, EPA will publish a document in the **Federal Register** providing the details of such meetings.

ADDRESSES: Submit your comments, identified by Docket ID No. EPA–HQ–RCRA–2009–0640, by one of the following methods:

- *http://www.regulations.gov:* Follow the on-line instructions for submitting comments.
- *E-mail:* Comments may be sent by electronic mail (e-mail) to *rcra-docket@epa.gov,* Attention Docket ID No. EPA–HQ–RCRA–2009–0640. In contrast to EPA's electronic public docket, EPA's e-mail system is not an "anonymous access" system. If you send an e-mail comment directly to the Docket without going through EPA's electronic public docket, EPA's e-mail system automatically captures your e-mail address. E-mail addresses that are automatically captured by EPA's e-mail system are included as part of the comment that is placed in the official public docket, and made available in EPA's electronic public docket.
- *Fax:* Comments may be faxed to 202–566–0272; Attention Docket ID No. EPA–HQ–RCRA–2009–0640.
- *Mail:* Send your comments to the Hazardous Waste Management System; Identification and Listing of Special Wastes; Disposal of Coal Combustion Residuals From Electric Utilities Docket, Attention Docket ID No., EPA–HQ–RCRA–2009–0640, Environmental Protection Agency, *Mailcode:* 5305T, 1200 Pennsylvania Ave., NW., Washington, DC 20460. Please include a total of two copies.
- *Hand Delivery:* Deliver two copies of your comments to the Hazardous Waste Management System; Identification and Listing of Special Wastes; Disposal of Coal Combustion Residuals From Electric Utilities Docket, Attention Docket ID No., EPA–HQ–RCRA–2009–0640, EPA/DC, EPA West, Room 3334, 1301 Constitution Ave., NW., Washington, DC 20460. Such deliveries are only accepted during the Docket's normal hours of operation, and special arrangements should be made for deliveries of boxed information.

Instructions: Direct your comments to Docket ID No. EPA–HQ–RCRA–2009–0640. EPA's policy is that all comments received will be included in the public docket without change and may be made available online at *http://www.regulations.gov,* including any personal information provided, unless the comment includes information claimed to be Confidential Business Information (CBI) or other information whose disclosure is restricted by statute. Do not submit information that you consider to be CBI or otherwise protected through *http://www.regulations.gov* or e-mail. The *http://www.regulations.gov* Web site is an "anonymous access" system, which means EPA will not know your identity or contact information unless you provide it in the body of your comment. If you send an e-mail comment directly to EPA without going through *http://www.regulations.gov,* your e-mail address will be automatically captured and included as part of the comment that is placed in the public docket and made available on the Internet. If you submit an electronic comment, EPA recommends that you include your name and other contact information in the body of your comment and with any disk or CD–ROM you submit. If EPA cannot read your comment due to technical difficulties and cannot contact you for clarification, EPA may not be able to consider your comment. Electronic files should avoid the use of special characters, any form of encryption, and be free of any defects or viruses. For additional information about EPA's public docket, visit the EPA Docket Center homepage at *http://www.epa.gov/epahome/dockets.htm.* For additional instructions on submitting comments, go to the **SUPPLEMENTARY INFORMATION** section of this document.

Docket: All documents in the docket are listed in the *http://www.regulations.gov* index. Although listed in the index, some information is not publicly available, *e.g.,* CBI or other information whose disclosure is restricted by statute. Certain other material, such as copyrighted material, will be publicly available only in hard copy. Publicly available docket materials are available either electronically in *http://www.regulations.gov* or in hard copy at the Hazardous Waste Management System; Identification and Listing of Special Wastes; Disposal of Coal Combustion Residuals From Electric Utilities Docket, EPA/DC, EPA West, Room 3334, 1301 Constitution Ave., NW., Washington, DC 20460. This Docket Facility is open from 8:30 a.m. to 4:30 p.m., Monday through Friday, excluding legal holidays. The Docket telephone number is (202) 566–0270. The Public Reading Room is open from 8:30 a.m. to 4:30 p.m., Monday through Friday, excluding legal holidays. The

telephone number for the Public Reading Room is (202) 566–1744.

FOR FURTHER INFORMATION CONTACT: Alexander Livnat, Office of Resource Conservation and Recovery, Environmental Protection Agency, 5304P; *telephone number:* (703) 308–7251; *fax number:* (703) 605–0595; *e-mail address: livnat.alexander@epa.gov,* or Steve Souders, Office of Resource Conservation and Recovery, Environmental Protection Agency, 5304P; *telephone number:* (703) 308–8431; *fax number:* (703) 605–0595; *e-mail address: souders.steve@epa.gov.* For technical information on the CERCLA aspects of this rule, contact Lynn Beasley, Office of Emergency Management, Regulation and Policy Development Division (5104A), U.S. Environmental Protection Agency, 1200 Pennsylvania Avenue, NW., Washington, DC 20460, [*E-mail address and telephone number: Beasley.lynn@epa.gov* (202–564–1965).]

For more information on this rulemaking please visit *http://www.epa.gov/epawaste/nonhaz/industrial/special/fossil/index.htm.*

SUPPLEMENTARY INFORMATION:

A. Does this action apply to me?

The proposed rule would apply to all coal combustion residuals (CCRs) generated by electric utilities and independent power producers. However, this proposed rule does not address the placement of CCRs in minefills. The U. S. Department of Interior (DOI) and EPA will address the management of CCRs in minefills in a separate regulatory action(s), consistent with the approach recommended by the National Academy of Sciences, recognizing the expertise of DOI's Office of Surface Mining Reclamation and Enforcement in this area.[1] In addition, under either alternative proposal, EPA is not proposing to affect the current status of coal combustion residuals that are beneficially used.[2] (*See* section IV. D for further details on proposed clarifications of beneficial use.) CCRs from non-utility boilers burning coal are not included within today's proposed rule. EPA will decide on an appropriate action for these wastes after completing this rulemaking effort.

The proposed rule may affect the following entities: electric utility facilities and independent power producers that fall under the North American Industry Classification System (NAICS) code 221112, and hazardous waste treatment and disposal facilities that fall under NAICS code 562211. The industry sector(s) identified above may not be exhaustive; other types of entities not listed could also be affected. The Agency's aim is to provide a guide for readers regarding those entities that potentially could be affected by this action. To determine whether your facility, company, business, organization, etc., is affected by this action, you should refer to the applicability criteria contained in section IV of this preamble. If you have any questions regarding the applicability of this action to a particular entity, consult the person listed in the preceding **FOR FURTHER INFORMATION CONTACT** section.

B. What should I consider as I prepare my comments for EPA?

1. *Submitting confidential business information (CBI).* Do not submit information that you consider to be CBI through *http://www.regulations.gov* or by e-mail. Send or deliver information identified as CBI only to the following address: RCRA CBI Document Control Officer, Office of Resource Conservation and Recovery (5305P), U.S. EPA, 1200 Pennsylvania Avenue, NW., Washington DC 20460, Attention Docket No, EPA–HQ–RCRA–2009–0640. You may claim information that you submit to EPA as CBI by marking any part or all of the information as CBI (if you submit CBI on a disk or CD ROM, mark the outside of the disk or CD ROM as CBI and then identify electronically within the disk or CD ROM the specific information that is claimed as CBI). Information so marked will not be disclosed, except in accordance with the procedures set forth in 40 CFR part 2. In addition to one complete version of the comment that includes information claimed as CBI, a copy of the comment that does not contain the information claimed as CBI must be submitted for inclusion in the public docket. If you submit the copy that does not contain CBI on disk or CD ROM, mark the outside of the disk or CD ROM clearly that it does not contain CBI. Information not marked as CBI will be included in the public docket and EPA's electronic public docket without prior notice. If you have questions about CBI or the procedures for claiming CBI, please contact: LaShan Haynes, Office of Resource Conservation and Recovery (5305P), U.S. Environmental Protection Agency, 1200 Pennsylvania Avenue, NW., Washington DC 20460–0002, telephone (703) 605–0516, e-mail address *haynes.lashan@epa.gov.*

2. *Tips for Preparing Your Comments.* When submitting comments, remember to:

- Identify the rulemaking by docket number and other identifying information (subject heading, **Federal Register** date and page number).
- Follow directions—The Agency may ask you to respond to specific questions or organize comments by referencing a Code of Federal Regulations (CFR) part or section number.
- Explain why you agree or disagree, suggest alternatives, and substitute language for your requested changes, and explain your interest in the issue you are attempting to address.
- Describe any assumptions and provide any technical information and/or data that you used.
- If you estimate potential costs or burdens, explain how you arrived at your estimate in sufficient detail to allow for it to be reproduced.
- Provide specific examples to illustrate your concerns, and suggest alternatives.
- Explain your views as clearly as possible.
- Make sure to submit your comments by the comment period deadline identified.

3. *Docket Copying Costs.* The first 100-copied pages are free. Thereafter, the charge for making copies of Docket materials is 15 cents per page.

C. Definitions, Abbreviations and Acronyms Used in This Preamble (Note: Any term used in this proposed rulemaking that is not defined in this section will either have its normal dictionary meaning, or is defined in 40 CFR 260.10.)

Acre-foot means the volume of one acre of surface area to a depth of one foot.

Beneficial Use of Coal Combustion Products (CCPs) means the use of CCPs that provides a functional benefit; replaces the use of an alternative material, conserving natural resources that would otherwise need to be obtained through practices such as extraction; and meets relevant product specifications and regulatory standards (where these are available). CCPs that are used in excess quantities (*e.g.,* the field-applications of FGD gypsum in amounts that exceed scientifically-supported quantities required for enhancing soil properties and/or crop

[1] The National Research Council (NRC) Committee on Mine Placement of Coal Combustion Wastes stated: "The committee believes that OSM and its SMCRA state partners should take the lead in developing new national standards for CCR use in mines because the framework is in place to deal with mine-related issues." National Academy of Sciences. Managing Coal Combustion Residues in Mines; The National Academies Press, Washington, DC, 2006.

[2] The NRC committee recommended "that secondary uses of CCRs that pose minimal risks to human health and the environment be strongly encouraged." *Ibid.*

yields), placed as fill in sand and gravel pits, or used in large scale fill projects, such as for restructuring the landscape, are excluded from this definition.

Boiler slag means the molten bottom ash collected at the base of slag tap and cyclone type furnaces that is quenched with water. It is made up of hard, black, angular particles that have a smooth, glassy appearance.

Bottom ash means the agglomerated, angular ash particles, formed in pulverized coal furnaces that are too large to be carried in the flue gases and collect on the furnace walls or fall through open grates to an ash hopper at the bottom of the furnace.

CCR Landfill means a disposal facility or part of a facility where CCRs are placed in or on land and which is not a land treatment facility, a surface impoundment, an underground injection well, a salt dome formation, a salt bed formation, an underground mine, a cave, or a corrective action management unit. For purposes of this proposed rule, landfills also include piles, sand and gravel pits, quarries, and/or large scale fill operations. Sites that are excavated so that more coal ash can be used as fill are also considered CCR landfills.

CCR Surface Impoundment or *impoundment* means a facility or part of a facility which is a natural topographic depression, man-made excavation, or diked area formed primarily of earthen materials (although it may be lined with man-made materials), which is designed to hold an accumulation of CCRs containing free liquids, and which is not an injection well. Examples of CCR surface impoundments are holding, storage, settling, and aeration pits, ponds, and lagoons. CCR surface impoundments are used to receive CCRs that have been sluiced (flushed or mixed with water to facilitate movement), or wastes from wet air pollution control devices, often in addition to other solid wastes.

Cenospheres are lightweight, inert, hollow spheres comprised largely of silica and alumina glass.

Coal Combustion Products (CCPs) means fly ash, bottom ash, boiler slag, or flue gas desulfurization materials, that are beneficially used.

Coal Combustion Residuals (CCRs) means fly ash, bottom ash, boiler slag, and flue gas desulfurization materials destined for disposal. CCRs are also known as coal combustion wastes (CCWs) and fossil fuel combustion (FFC) wastes, when destined for disposal.

Electric Power Sector (Electric Utilities and Independent Power Producers) means that sector of the power generating industry that comprises electricity-only and combined-heat-and-power (CHP) plants whose primary business is to sell electricity, or electricity and heat, to the public.

Existing CCR Landfill means a landfill which was in operation or for which construction commenced prior to the effective date of the final rule. A CCR landfill has commenced construction if the owner or operator has obtained the Federal, State and local approvals or permits necessary to begin physical construction; and either

(1) A continuous on-site, physical construction program has begun; or

(2) The owner or operator has entered into contractual obligations—which cannot be cancelled or modified without substantial loss—for physical construction of the CCR landfill to be completed within a reasonable time.

Existing CCR Surface Impoundment means a surface impoundment which was in operation or for which construction commenced prior to the effective date of the final rule. A CCR surface impoundment has commenced construction if the owner or operator has obtained the Federal, State and local approvals or permits necessary to begin physical construction; and either

(1) A continuous on-site, physical construction program has begun; or

(2) The owner or operator has entered into contractual obligations—which can not be cancelled or modified without substantial loss—for physical construction of the CCR surface impoundment to be completed within a reasonable time.

Flue Gas Desulfurization (FGD) material means the material produced through a process used to reduce sulfur dioxide (SO_2) emissions from the exhaust gas system of a coal-fired boiler. The physical nature of these materials varies from a wet sludge to a dry powdered material, depending on the process, and their composition comprises either sulfites, sulfates or a mixture thereof.

Fly ash means the very fine globular particles of silica glass which is a product of burning finely ground coal in a boiler to produce electricity, and is removed from the plant exhaust gases by air emission control devices.

Hazard potential means the possible adverse incremental consequences that result from the release of water or stored contents due to failure of a dam (or impoundment) or mis-operation of the dam or appurtenances.[3]

High hazard potential surface impoundment means a surface impoundment where failure or mis-operation will probably cause loss of human life.

Significant hazard potential surface impoundment means a surface impoundment where failure or mis-operation results in no probable loss of human life, but can cause economic loss, environment damage, disruption of lifeline facilities, or impact other concerns.

Low hazard potential surface impoundment means a surface impoundment where failure or mis-operation results in no probable loss of human life and low economic and/or environmental losses. Losses are principally limited to the surface impoundment owner's property.

Less than low hazard potential surface impoundment means a surface impoundment not meeting the definitions for High, Significant, or Low Hazard Potential.

Independent registered professional engineer or hydrologist means a scientist or engineer who is not an employee of the owner or operator of a CCR landfill or surface impoundment who has received a baccalaureate or post-graduate degree in the natural sciences or engineering and has sufficient training and experience in groundwater hydrology and related fields as may be demonstrated by state registration, professional certifications, or completion of accredited university programs that enable that individual to make sound professional judgments regarding groundwater monitoring, contaminant fate and transport, and corrective action.

Lateral expansion means a horizontal expansion of the waste boundaries of an existing CCR landfill, or existing CCR surface impoundment made after the effective date of the final rule.

Maximum Contaminant Level (MCL) means the highest level of a contaminant that is allowed in drinking water under the Safe Drinking Water Act (SDWA). MCLs are set as close to the MCL goals as feasible using the best available treatment technology and taking cost into consideration. MCLs are enforceable standards for drinking water.

Minefill means a project involving the placement of CCRs in coal mine voids for use as fill, grouting, subsidence control, capping, mine sealing, and

[3] The Hazard Potential Classification System for Dams was developed by the U.S. Army Corps of Engineers for the National Inventory of Dams (*see https://rsgis.crrel.usace.army.mil/apex/f?p=397:1:913698079375545*). Hazard potential ratings do not provide an estimate of the probability of failure or mis-operation, but rather what the consequences of such a failure or mis-operation would be.

treating acid mine drainage, whether for purposes of disposal or for beneficial use, such as mine reclamation.

Natural water table means the natural level at which water stands in a shallow well open along its length and penetrating the surficial deposits just deeply enough to encounter standing water at the bottom. This level is uninfluenced by groundwater pumping or other engineered activities.

Organosilanes are organic compounds containing at least one carbon to silicon bond, and are typically used to promote adhesion.

Potential damage case means those cases with documented MCL exceedances that were measured in ground water beneath or close to the waste source. In these cases, while the association with CCRs has been established, the documented exceedances had not been demonstrated at a sufficient distance from the waste management unit to indicate that waste constituents had migrated to the extent that they could cause human health concerns.

Pozzolanic material means primarily vitreous siliceous materials, such as many types of CCRs that, when combined with calcium hydroxide and in the presence of water, exhibit cementitious properties.

Proven damage case means those cases with (i) Documented exceedances of primary maximum contaminant levels (MCLs) or other health-based standards measured in ground water at sufficient distance from the waste management unit to indicate that hazardous constituents have migrated to the extent that they could cause human health concerns, and/or (ii) where a scientific study provides documented evidence of another type of damage to human health or the environment (*e.g.,* ecological damage), and/or (iii) where there has been an administrative ruling or court decision with an explicit finding of specific damage to human health or the environment. In cases of co-management of CCRs with other industrial waste types, CCRs must be clearly implicated in the reported damage.

Sand and gravel pit, and/or quarry means an excavation for the commercial extraction of aggregate for use in construction projects. CCRs have historically been used to fill sand and gravel pits and quarries. CCRs are not known to be used to fill metal mines.

Secondary Drinking Water Standards are non-enforceable federal guidelines regarding cosmetic effects (such as tooth or skin discoloration) or aesthetic effects (such as taste, odor, or color) of drinking water.

Special Wastes means any of the following wastes that are managed under the modified subtitle C requirements: CCRs destined for disposal.

Surface Water means all water naturally open to the atmosphere (rivers, lakes, reservoirs, ponds, streams, impoundments, seas, estuaries, etc.).

Uniquely associated wastes means low-volume wastes other than those defined as CCRs that are related to the coal combustion process. Examples of uniquely associated wastes are precipitation runoff from coal storage piles at the electric utility, waste coal or coal mill rejects that are not of sufficient quality to burn as a fuel, and wastes from cleaning boilers used to generate steam.

CCPs Coal Combustion Products
CCRs Coal Combustion Residuals
CFR Code of Federal Regulations
CERCLA Comprehensive Environmental Response, Compensation, and Liability Act
EPA U.S. Environmental Protection Agency
EPCRA Emergency Planning and Community Right-to-Know Act
MCL Maximum Contaminant Level
m/L milligrams per liter
NPDES National Pollutant Discharge Elimination System
NRC National Response Center
PDWS Primary Drinking Water Standard
OSM Office of Surface Mining Reclamation and Enforcement, U.S. Department of the Interior
RCRA Resource Conservation and Recovery Act (42 USCA 6901)
RQ Reportable Quantity
SDWS Secondary Drinking Water Standard
SMCRA Surface Mining Control and Reclamation Act
µg/L micrograms per liter
WQC Federal water quality criteria

D. The Contents of This Preamble Are Listed in the Following Outline

I. Background
A. Why is EPA proposing two options?
1. Basis of Why EPA Is Proceeding With Today's Co-Proposals
2. Brief Description of Today's Co-Proposals
3. Summary of Estimated Regulatory Costs and Benefits
B. What is the statutory authority for this action?
C. Regulation of Wastes Under RCRA Subtitle C
D. Regulation of Solid Wastes Under RCRA Subtitle D
E. Summary of the 1993 and 2000 Regulatory Determinations
F. What are CCRs?
1. Chemical Constituents in CCRs
2. Recent EPA Research on Constituent Leaching From CCRs
G. Current Federal Regulations or Standards Applicable to the Placement of CCRs in Landfills and Surface Impoundments
II. New Information on the Placement of CCRs in Landfills and Surface Impoundments
A. New Developments Since the May 2000 Regulatory Determination
B. CCR Risk Assessment
C. Damage Cases
III. Overview and Summary of the Bevill Regulatory Determination and the Proposed Subtitle C and Subtitle D Regulatory Options
A. Summary of Subtitle C Proposal
B. Summary of Subtitle D Proposal
IV. Bevill Regulatory Determination Relating to CCRs From Electric Utilities
A. Basis for Reconsideration of May 2000 Regulatory Determination
B. RCRA Section 8002(n) Study Factors Environmental Benefits
C. Preliminary Bevill Conclusions and Impact of Reconsideration
D. EPA Is Not Reconsidering the Regulatory Determination Regarding Beneficial Use
1. Why is EPA not proposing to change the determination that CCRs that are beneficially used do not warrant federal regulation?
2. What constitutes beneficial use?
3. Disposal of CCRs in Sand and Gravel Pits and Large Scale Fill Operations Is Not Considered a Beneficial Use
4. Issues Associated With Unencapsulated Beneficial Uses
E. Placement of CCRs in Minefilling Operations
F. EPA Is Not Proposing To Revise the Bevill Determination for CCRs Generated by Non-Utilities
V. Co-Proposed Listing of CCRs as a Special Waste Under RCRA Subtitle C and Special Requirements for Disposal of CCRs Generated by Electric Utilities
A. What is the basis for listing CCRs as a special waste?
1. Criteria for Listing CCRs as a Special Waste and Background on 2010 Risk Assessment
B. Background on EPA's 2010 Risk Assessment
1. Human Health Risks
2. Ecological Risks
C. Consideration of Individual Listing Criteria
1. Toxicity—Factor (i)
2. Concentration of Constituents in Waste—Factor (ii)
3. Migration, Persistence, Degradation, and Bioaccumulation—Factors (iii), (iv), (v), and (vi)
4. Plausible Types of Mismanagement, Quantities of the Waste Generated, Nature and Severity of Effects From Mismanagement—Factors (vii), (viii) and (ix)
5. Action Taken by Other Governmental Agencies or Regulatory Programs Based on the Health or Environmental Hazard Posed by the Waste or Waste Constituent—Factor (x)
6. Other Factors—Factor (xi)
VI. Summary of the Co-Proposed Subtitle C Regulations
A. Special Waste Listing
B. Proposed Special Requirements for CCRs

1. Modification of Technical Standards Under 3004(x)
i. Modification of CCR Landfills and Surface Impoundments From the Section 3004(o) Liner and Leak Detection Requirements
ii. Fugitive Dust Controls
iii. Special Requirements for Stability of CCR Surface Impoundments
iv. Wet-Handling of CCRs, Closure, and Interim Status for Surface Impoundments
v. Proposed Land Disposal Restrictions
2. Proposed Treatment Standards for Non-Wastewaters (Dry CCRs)
3. Proposed Treatment Standards for Wastewaters (Wet-Handled CCRs)
4. Effective Date of the LDR Prohibitions
C. Applicability of Subtitle C Regulations
D. CERCLA Designation and Reportable Quantities
1. Reporting Requirements
2. Basis for RQs and Adjustments
3. Application of the CERCLA Mixture Rule to Listed CCR
4. Correction of Table of Maximum Observed Constituent Concentrations Identified by EPA
E. Listing of CCR as Special Wastes To Address Perceived Stigma Issue
VII. How would the proposed subtitle C requirements be implemented?
A. Effective Dates
B. What are the requirements with which facilities must comply?
1. Generators and Transporters
2. Treatment, Storage, and Disposal Facilities (TSDs)
C. RCRA Section 3010 Notification
D. Permit Requirements
1. Facilities Newly Subject to RCRA Permit Requirements
2. Existing Interim Status Facilities
3. Permitted Facilities
E. Requirements in 40 CFR Parts 264 and 265
VIII. Impacts of a Subtitle C Rule on State Authorization
A. Applicability of the Rule in Authorized States
B. Effect on State Authorization
IX. Summary of the Co-Proposal Regulating CCRs Under Subtitle D Regulations
A. Overview and General Issues
1. Regulatory Approach
2. Notifications
B. Section-by-Section Discussion of RCRA Subtitle D Criteria
1. Proposed Modifications to Part 257, Subpart A
2. General Provisions
3. Definitions
4. Location Restrictions
5. Design Requirements
6. Operating Requirements
7. Ground Water Monitoring/Corrective Action
8. Closure and Post-Closure Care
9. Financial Assurance
10. Off-Site Disposal
11. Alternative RCRA Subtitle D Approaches
X. How would the proposed subtitle D regulations be implemented?
A. Effective Dates
B. Implementation and Enforcement of Subtitle D Requirements
XI. Impact of a Subtitle D Regulation on State Programs
XII. Impacts of the Proposed Regulatory Alternatives
A. What are the economic impacts of the proposed regulatory alternatives?
B. Benefits Not Quantified in the RIA
1. Non-Quantified Plant and Wildlife Protection Benefits
2. Non-Quantified Surface Water Protection Benefits
3. Non-Quantified Ambient Air Protection Benefits
C. Comparison of Costs to Benefits for the Regulatory Alternatives
D. What are the potential environmental and public health impacts of the proposed regulatory alternatives?
1. Environmental and Public Health Impacts Estimated in the RIA
2. Environmental and Public Health Impacts Not Estimated in the RIA
XIII. Other Alternatives EPA Considered
XIV. Is the EPA soliciting comments on specific issues?
XV. Executive Orders and Laws Addressed in This Action
A. Executive Order 12866: Regulatory Planning and Review
B. Paperwork Reduction Act
C. Regulatory Flexibility Act
D. Unfunded Mandates Reform Act
E. Executive Order 13132: Federalism
F. Executive Order 13175: Consultation and Coordination With Indian Tribal Governments
G. Executive Order 13045: Protection of Children From Environmental Health & Safety Risks
H. Executive Order 13211: Actions That Significantly Affect Energy Supply, Distribution, or Use
I. National Technology Transfer and Advancement Act
J. Executive Order 12898: Federal Actions To Address Environmental Justice in Minority Populations and Low-Income Populations
APPENDIX to the Preamble: Documented Damages From CCR Management Practices

I. Background

A. Why is EPA proposing two options?

1. Basis of Why EPA Is Proceeding With Today's Co-Proposals

EPA is revisiting its regulatory determination for CCRs under the Bevill amendment. This decision is driven in part by the failure of a surface impoundment retaining wall in Kingston, TN in December 2009. Deciding upon the appropriate course of action to address over 100 million tons per year of CCRs is an extremely important step. In developing this proposal, EPA conducted considerable data gathering and analysis. While the public was able to comment on significant portions of our analyses in August 2007, as part of a Notice of Data Availability, there are differing views regarding the meaning of EPA's information and what course of action EPA should take. In part, the differing views are fueled by the complex data, analyses, legislation, implications of available options, possible unintended consequences, and a decision process, all of which pose considerations that could justify EPA selecting a RCRA subtitle C approach or selecting a RCRA subtitle D approach.

Deciding whether or not to maintain the Bevill exemption for CCRs, entails an evaluation of the eight RCRA Section 8002(n) study factors:

- Source and volumes of CCRs generated per year
- Present disposal and utilization practices
- Potential danger, if any, to human health and the environment from the disposal and reuse of CCRs
- Documented cases in which danger to human health or the environment from surface runoff or leachate has been proved
- Alternatives to current disposal methods
- The cost of such alternatives
- The impact of the alternatives on the use of coal and other natural resources
- The current and potential utilization of CCRs

Ultimately, the approach selected will need to ensure that catastrophic releases such as occurred at the Tennessee Valley Authority's (TVA's) Kingston, Tennessee facility do not occur and that other types of damage cases associated with CCR surface impoundments and landfills are prevented. Thus, this process requires EPA to balance the eight factors, which ultimately rests on a policy judgment. This is further complicated in this case because the facts identified under each of the individual factors are even subject to widely varying perspectives. For example, in considering the alternatives to current disposal methods, some claim that RCRA subtitle C would significantly lessen beneficial use while others *see* beneficial use expanding as disposal becomes more costly; some *see* damage cases as substantial, while others note very few incidences of significant off-site contamination.

Given the inherently discretionary nature of the decision, the complexities of the scientific analyses, and the controversy of the issue, EPA wants to ensure that the ultimate decision is based on the best available data, and is taken with the fullest possible extent of public input. As discussed in section IV in greater detail, there are a number of issues on which additional or more recent information would be useful in

allowing the Agency to reach a final decision. In the absence of this information, EPA has not yet reached a conclusion as to how to strike the appropriate balance among these eight factors and so is presenting two proposals for federal regulation of CCRs.

As EPA weighs the eight Bevill study factors to reach our ultimate decision, EPA will be guided by the following principles, which are reflected in the discussions throughout this preamble. The first is that EPA's actions must ultimately be protective of human health and the environment. Second, any decision must be based on sound science. Finally, in conducting this rulemaking, EPA wants to ensure that our decision processes are transparent and encourage the greatest degree of public participation. Consequently, to further the public's understanding and ability to comment on all the issues facing the Agency, within this proposal, EPA identifies a series of scientific, economic, and materials management issues on which we are seeking comment from the public to strengthen our knowledge of the impact of EPA's decision.

There are three key areas of analyses where EPA is seeking comment: The extent of existing damage cases, the extent of the risks posed by the mismanagement of CCRs, and the adequacy of State programs to ensure proper management of CCRs (*e.g.,* is groundwater monitoring required of CCR landfills and surface impoundments). Since the 2007 NODA, EPA received new reports from industry and environmental and citizen groups regarding damage cases. Industry provided information indicating that many of EPA's listed proven damage cases do not meet EPA's criteria for a damage case to be proven. Environmental and citizen groups, on the other hand, reported that there are additional damage cases of which EPA is unaware. EPA's analysis, as well as the additional information from industry and environmental and citizen groups, which is in the docket for this proposal, needs to undergo public review, with the end result being a better understanding of the nature and number of damage cases. In addition, as discussed at length in sections II and IV, a number of technical questions have been raised regarding EPA's quantitative groundwater risk assessment. The Agency would implement similar technical controls under RCRA subtitle C or D. Therefore, a central issue is the adequacy of State programs. Under either regulatory approach, State programs will have key implementation roles. This is a very complex area to evaluate. For example, as EPA reports that 36% of the States do not have minimum liner requirements for CCR landfills, and 67% do not have liner requirements for CCR surface impoundments, we also observe that nearly all new CCR landfills and surface impoundments are constructed with liners. It should also be recognized that while states currently have considerable expertise in their State dam safety programs, those programs do not tend to be part of State solid waste or clean water act programs, and so, oversight may not be adequately captured in EPA's existing data. In several areas, there are these types of analytical tensions that warrant careful consideration by the public and EPA. This proposal requests states and others to provide further information on state programs, including the prevalence of groundwater monitoring at existing facilities (an area where our information is nearly 15 years old) and why state programs may address groundwater monitoring and risks differently for surface impoundments located proximate to rivers.

The results of the risk analysis demonstrate significant risks from surface impoundments. A common industry practice, however, is to place surface impoundments right next to water bodies. While the Agency's population risk assessment analysis accounted for adjacent water bodies, the draft risk assessment that presents individual risk estimates does not account for the presence of adjacent water bodies in the same manner that the population risk assessment did. EPA is requesting public comment on the exact locations of CCR waste management units so that the Agency can more fully account for water bodies that may exist between a waste management unit and a drinking water well (and thus, could potentially intercept a contaminated groundwater plume). EPA is also requesting comments on how the risk assessment should inform the final decision.

While the Agency believes the analyses conducted are sound, today's co-proposal of two options reflects our commitment to use the public process fully to ensure the best available scientific and regulatory impact analyses are considered in our decision. The final course of action will fully consider these legitimate and complex issues, and will result in the selection of a regulatory structure that best addresses the eight study factors identified in section 8002(n) of RCRA, and ensures protection of human health and the environment.

2. Brief Description of Today's Co-Proposals

a. Summary of Subtitle C Proposal

In combination with its proposal to reverse the Bevill determination for CCRs destined for disposal, EPA is proposing to list as a special waste, to be regulated under the RCRA subtitle C regulations, CCRs from electric utilities and independent power producers when destined for disposal in a landfill or surface impoundment. These CCRs would be regulated from the point of their generation to the point of their final disposition, including during and after closure of any disposal unit. This would include the generator and transporter requirements and the requirements for facilities managing CCRs, such as siting, liners (with modification), run-on and run-off controls, groundwater monitoring, fugitive dust controls, financial assurance, corrective action, including facility-wide corrective action, closure of units, and post-closure care (with certain modifications). In addition, facilities that dispose of, treat, or, in many cases, store, CCRs also would be required to obtain permits for the units in which such materials are disposed, treated, and stored. The rule would also regulate the disposal of CCRs in sand and gravel pits, quarries, and other large fill operations as a landfill.

To address the potential for catastrophic releases from surface impoundments, we also are proposing requirements for dam safety and stability for impoundments that, by the effective date of the final rule, have not closed consistent with the requirements. We are also proposing land disposal restrictions and treatment standards for CCRs, as well as a prohibition on the disposal of treated CCRs below the natural water table.

b. Summary of Subtitle D Proposal

In combination with today's proposal to leave the Bevill determination in place, EPA is proposing to regulate CCRs disposed of in surface impoundments or landfills under RCRA subtitle D requirements which would establish national criteria to ensure the safe disposal of CCRs in these units. The units would be subject to, among other things, location standards, composite liner requirements (new landfills and surface impoundments would require composite liners; existing surface impoundments without liners would have to retrofit within five years, or cease receiving CCRs and close); groundwater monitoring and corrective action standards for releases from the unit; closure and post-closure care

requirements; and requirements to address the stability of surface impoundments. We are also soliciting comments on requiring financial assurance. The rule would also regulate the disposal of CCRs in sand and gravel pits, quarries, and other large fill operations as a landfill. The rule would not regulate the generation, storage or treatment of CCRs prior to disposal. Because of the scope of subtitle D authority, the rule would not require permits, nor could EPA enforce the requirements. Instead, states or citizens could enforce the requirements under RCRA citizen suit authority; the states could also enforce any state regulation under their independent state enforcement authority.

EPA is also considering a potential modification to the subtitle D option, called "D prime" in the following table. Under this option, existing surface impoundments would not have to close or install composite liners but could continue to operate for their useful life. In the "D prime" option, the other elements of the subtitle D option would remain the same.

3. Summary of Estimated Regulatory Costs and Benefits

For the purposes of comparing the estimated regulatory compliance costs to the monetized benefits for each regulatory option, the Regulatory Impact Analysis (RIA) computed two comparison indicators: Net benefits (*i.e.,* benefits minus costs), and benefit/cost ratio (*i.e.,* benefits divided by costs). Table 1 below provides a summary of estimated regulatory costs and benefits for three regulatory options, based on the 7% discount rate base case and the 50-year period-of-analysis applied in the RIA. Furthermore, this benefit and cost summary table displays ranges of net benefit and benefit/cost results across three different scenarios concerning the potential impacts of each option on the future annual beneficial use of CCRs under each option. The first scenario presents the potential impact scenario that assumes that the increased future annual cost of RCRA-regulated CCR disposal will induce coal-fired electric utility plants to increase beneficial use of CCRs. The second scenario presents a potential market stigma effect under the subtitle C option which will induce a decrease in future annual CCR beneficial use. The third scenario assumed that beneficial use of CCRs continues according to its recent trend line without any future change as a result of any of the regulatory options. The RIA estimates both the first and second scenario incrementally in relation to the third scenario no change trend line. Table 1 shows the range of impacts and associated ranges of net benefits and benefit-cost ratios across these three beneficial use scenarios for each regulatory option. While each of these three scenario outcomes may be possible, EPA's experience with the RCRA program indicates that industrial generators of RCRA-regulated wastes are often able to increase recycling and materials recovery rates after a subtitle C regulation. Section XII in this preamble provides additional discussion of these estimates.

TABLE 1—SUMMARY TABLE COMPARISON OF REGULATORY BENEFITS TO COSTS—RANGING OVER ALL THREE BENEFICIAL USE SCENARIOS

[$Millions @ 2009$ prices and @ 7% discount rate over 50-year future period-of-analysis 2012 to 2061]

	Subtitle C "Special waste"	Subtitle D	Subtitle "D prime"
A. Present Values:			
1. Regulatory Costs:	$20,349	$8,095	$3,259.
2. Regulatory Benefits:	$87,221 to $102,191	$34,964 to $41,761	$14,111 to $17,501.
3. Net Benefits (2–1)	($251,166) to $81,842	($6,927) to $33,666	($2,666) to $14,242.
4. Benefit/Cost Ratio (2/1)	(11.343) to 5.022	0.144 to 5.159	0.182 to 5.370.
B. Average Annualized Equivalent Values:*			
1. Regulatory Costs	$1,474	$587	$236.
2. Regulatory Benefits:	$6,320 to $7,405	$2,533 to $3,026	$1,023 to $1,268.
3. Net Benefits (2–1)	($18,199) to $5,930	($502) to $2,439	($193) to $1,032.
4. Benefit/Cost Ratio (2/1)	(11.347) to 5.022	0.145 to 5.159	0.182 to 5.370.

* **Note:** Average annualized equivalent values calculated by multiplying 50-year present values by a 50-year 7% discount rate "capital recovery factor" of 0.07246.

B. What is the statutory authority for this action?

These regulations are being proposed under the authority of sections 1008(a), 2002(a), 3001, 3004, 3005, and 4004 of the Solid Waste Disposal Act of 1970, as amended by the Resource Conservation and Recovery Act of 1976 (RCRA), as amended by the Hazardous and Solid Waste Amendments of 1984 (HSWA), 42 U.S.C. 6907(a), 6912(a), 6921,6924, 6925 and 6944. These statutes, combined, are commonly referred to as "RCRA."

RCRA section 1008(a) authorizes EPA to publish "suggested guidelines for solid waste management." 42 U.S.C. 6907(a). Such guidelines must provide a technical and economic description of the level of performance that can be achieved by available solid waste management practices that provide for protection of human health and the environment.

RCRA section 2002 grants EPA broad authority to prescribe, in consultation with federal, State, and regional authorities, such regulations as are necessary to carry out the functions under federal solid waste disposal laws. (42 U.S.C. 6912(a)).

RCRA section 3001(b) requires EPA to list particular wastes that will be subject to the requirements established under subtitle C. (42 U.S.C. 6921(b)). The regulation listing such wastes must be based on the listing criteria established pursuant to section 3001(a), and codified at 40 CFR 261.11.

Section 3001(b)(3)(A) of RCRA established a temporary exemption for fly ash waste, bottom ash waste, slag waste, and flue gas emission control waste generated primarily from the combustion of coal or other fossil fuels, among others, and required the Agency to conduct a study of those wastes and, after public hearings and an opportunity for comment, determine whether these wastes should be regulated pursuant to subtitle C requirements (42 U.S.C. 6921 (b)(3)(A)).

Section 3004 of RCRA generally requires EPA to establish standards applicable to the treatment, storage, and disposal of hazardous waste to ensure that human health and the environment are protected. 42 U.S.C. 6924. Sections

3004(c) and (d) prohibit free liquids in hazardous waste landfills. Sections 3004(g) and (m) prohibit land disposal of hazardous wastes, unless, before disposal, those wastes meet treatment standards established by EPA that will "substantially diminish the toxicity of the waste or substantially reduce the likelihood of migration of hazardous constituents from the waste so that short-term and long-term threats are minimized." (42 U.S.C. 6924(c), (d), (g), and (m)).

RCRA section 3004(x) allows the Administrator to tailor certain specified requirements for particular categories of wastes, including those that are the subject of today's proposal, namely "fly ash waste, bottom ash waste, and flue gas emission control wastes generated primarily from the combustion of coal or other fossil fuels" (42 U.S.C. 6924(x)). EPA is authorized to modify the requirements of sections 3004 (c), (d), (e), (f), (g), (o), and (u), and section 3005(j), to take into account the special characteristics of the wastes, the practical difficulties associated with implementation of such requirements, and site-specific characteristics, including but not limited to the climate, geology, hydrology and soil chemistry at the site. EPA may only make such modifications, provided the modified requirements assure protection of human health and the environment. (42 U.S.C. 6924(x)).

RCRA section 3005 generally requires any facility that treats, stores, or disposes of wastes identified or listed under subtitle C, to have a permit. 42 U.S.C. 6925(a). This section also generally imposes requirements on facilities that become newly subject to the permitting requirements as a result of regulatory changes, and so can continue to operate for a period until they obtain a permit—*i.e.,* "interim status facilities." 42 U.S.C. 6925(e), (i), (j). Congress imposed special requirements on interim status surface impoundments in section 3005(j). In order to continue receiving wastes, interim status surface impoundments are generally required to retrofit the impoundment within 4 years, to install a double liner, with a leachate collection system, and groundwater monitoring. 42 U.S.C. 6925(j)(6). In addition, wastes disposed into interim status surface impoundments must meet the land disposal restrictions in EPA's regulations, or the unit must be annually dredged. 42 U.S.C. 6925(j)(11).

RCRA Section 4004 generally requires EPA to promulgate regulations containing criteria for determining which facilities shall be classified as sanitary landfills (and not open dumps) so that there is no reasonable probability of adverse effects on health or the environment from disposal of solid wastes at such facilities.

C. Regulation of Wastes Under RCRA Subtitle C

Solid wastes may become subject to regulation under subtitle C of RCRA in one of two ways. A waste may be subject to regulation if it exhibits certain hazardous properties, called "characteristics," or if EPA has specifically listed the waste as hazardous. *See* 42 U.S.C. 6921(a). EPA's regulations in the Code of Federal Regulations (40 CFR) define four hazardous waste characteristic properties: Ignitability, corrosivity, reactivity, or toxicity (*See* 40 CFR 261.21–261.24). All generators must determine whether or not a waste exhibits any of these characteristics by testing the waste, or by using knowledge of the process that generated the waste (*see* § 262.11(c)). While not required to sample the waste, generators will be subject to enforcement actions if found to be improperly managing wastes that exhibit one or more of the characteristics.

EPA may also conduct a more specific assessment of a waste or category of wastes and "list" them if they meet the criteria set out in 40 CFR 261.11. Under the third criterion, at 40 CFR 261.11(a)(3), a waste will be listed if it contains hazardous constituents identified in 40 CFR part 261, Appendix VIII, and if, after considering the factors noted in this section of the regulations, we "conclude that the waste is capable of posing a substantial present or potential hazard to human health or the environment when improperly treated, stored, transported, or disposed of, or otherwise managed." We place a chemical on the list of hazardous constituents on Appendix VIII only if scientific studies have shown a chemical has toxic effects on humans or other life forms. When listing a waste, we also add the hazardous constituents that serve as the basis for listing the waste to 40 CFR part 261, Appendix VII.

The regulations at 40 CFR 261.31 through 261.33 contain the various hazardous wastes that EPA has listed to date. Section 261.31 lists wastes generated from non-specific sources, known as "F-wastes," that are usually generated by various industries or types of facilities, such as "wastewater treatment sludges from electroplating operations" (*see* EPA Hazardous Waste No. F006). Section 261.32 lists wastes generated from specific industry sources, known as "K-wastes," such as "Spent potliners from primary aluminum production" (*see* EPA Hazardous Waste No. K088). Section 261.33 contains lists of commercial chemical products and other materials, known as "P-wastes" or "U-wastes," that become hazardous wastes when they are discarded or intended to be discarded.

As discussed in greater detail later in this proposal, EPA is considering whether to codify a listing of CCRs that are disposed of in landfills or surface impoundments, in a new section of the regulations, as "Special Wastes." EPA is considering creating this new category of wastes, in part, to reflect the fact that these wastes would be subject to modified regulatory requirements using the authority provided under section 3004(x) of RCRA (*e.g.,* the modified CCR landfill and surface impoundment liner and leak detection system requirements, the effective dates for the land disposal restrictions, and the surface impoundment retrofit requirements).

If a waste exhibits a hazardous characteristic or is listed under subtitle C, then it is subject to the requirements of RCRA subtitle C, and the implementing regulations found in 40 CFR parts 260 through 268, parts 270 to 279, and part 124. These requirements apply to persons who generate, transport, treat, store or dispose of such waste and establish rules governing every phase of the waste's management from its generation to its final disposition and beyond. Facilities that treat, store or dispose of hazardous wastes require a permit which incorporates all of the design and operating standards established by EPA rules, including standards for piles, landfills, and surface impoundments. Under RCRA subtitle C requirements, land disposal of hazardous waste is prohibited unless the waste is first treated to meet the treatment standards (or meets the treatment standards as generated) established by EPA that minimize threats to human health and the environment posed by the land disposal of the waste, or unless the waste is disposed in a unit from which there will be no migration of hazardous constituents for as long as the waste remains hazardous. In addition, RCRA subtitle C facilities are required to clean up any releases of hazardous waste or constituents from solid waste management units at the facility, as well as beyond the facility boundary, as necessary to protect human health and the environment. RCRA subtitle C also requires that permitted facilities demonstrate that they have adequate financial resources (*i.e.,* financial assurance) for obligations, such as closure, post-closure care, necessary

clean up, and any liability from facility operations.

The RCRA subtitle C requirements are generally implemented under state programs that EPA has authorized to operate in lieu of the federal program, based upon a determination that the state program is no less stringent than the federal program. In a state that operates under an authorized program, any revisions made to EPA requirements are generally effective as part of the federal RCRA program in that state only after the state adopts the revised requirement, and EPA authorizes the state requirement. The exception applies with respect to requirements implementing statutory provisions added to subtitle C by the 1984 Hazardous and Solid Waste Amendments to RCRA; such requirements are immediately effective in all states, and are enforced by EPA.

All RCRA hazardous wastes are also hazardous substances under the Comprehensive Environmental Response, Compensation, and Liability Act (CERCLA), as defined in section 101(14)(C) of the CERCLA statute. This applies to wastes listed in §§ 261.31 through 261.33, as well as any wastes that exhibits a RCRA hazardous characteristic. Table 302.4 at 40 CFR 302.4 lists the CERCLA hazardous substances along with their reportable quantities (RQs). Anyone spilling or releasing a hazardous substance at or above its RQ must report the release to the National Response Center, as required in CERCLA Section 103. In addition, Section 304 of the Emergency Planning and Community Right-to-Know Act (EPCRA) requires facilities to report the release of a CERCLA hazardous substance at or above its RQ to State and local authorities. Today's rule proposes an approach for estimating whether released CCRs exceed an RQ. Wastes listed as special wastes will generally be subject to the same requirements under RCRA subtitle C and CERCLA as are hazardous wastes, although as discussed elsewhere in this preamble, EPA is proposing to revise certain requirements under the authority of section 3004(x) of RCRA to account for the large volumes and unique characteristics of these wastes.

D. Regulation of Solid Wastes Under RCRA Subtitle D

Solid wastes that are neither a listed and/or characteristic hazardous waste are subject to the requirements of RCRA subtitle D. Subtitle D of RCRA establishes a framework for Federal, State, and local government cooperation in controlling the management of nonhazardous solid waste. The federal role in this arrangement is to establish the overall regulatory direction, by providing minimum nationwide standards for protecting human health and the environment, and to providing technical assistance to states for planning and developing their own environmentally sound waste management practices. The actual planning and direct implementation of solid waste programs under RCRA subtitle D, however, remains a state and local function, and the act authorizes States to devise programs to deal with State-specific conditions and needs. That is, EPA has no role in the planning and direct implementation of solid waste programs under RCRA subtitle D.

Under the authority of sections 1008(a)(3) and 4004(a) of subtitle D of RCRA, EPA first promulgated the Criteria for Classification of Solid Waste Disposal Facilities and Practices (40 CFR part 257) on September 13, 1979. These subtitle D Criteria establish minimum national performance standards necessary to ensure that "no reasonable probability of adverse effects on health or the environment" will result from solid waste disposal facilities or practices. Practices not complying with the criteria constitute "open dumping" for purposes of the Federal prohibition on open dumping in section 4005(a). EPA does not have the authority to enforce the prohibition directly (except in situations involving the disposal or handling of sludge from publicly-owned treatment works, where Federal enforcement of POTW sludge-handling facilities is authorized under the CWA). States and citizens may enforce the prohibition on open dumping using the authority under RCRA section 7002. EPA, however, may act only if the handling, storage, treatment, transportation, or disposal of such wastes may present an imminent and substantial endangerment to health or the environment (RCRA 7003). In addition, the prohibition may be enforced by States and other persons under section 7002 of RCRA.

In contrast to subtitle C, RCRA subtitle D requirements relate only to the disposal of the solid waste, and EPA does not have the authority to establish requirements governing the generation, transportation, storage, or treatment of such wastes prior to disposal. Moreover, EPA would not have administrative enforcement authority to enforce any RCRA subtitle D criteria for CCR facilities, authority to require states to issue permits for them or oversee those permits, nor authority for EPA to determine whether any state permitting program for CCR facilities is adequate. Subtitle D of RCRA also provides less extensive authority to establish requirements relating to the cleanup (or corrective action) and financial assurance at solid waste facilities.

EPA regulations affecting RCRA subtitle D facilities are found at 40 CFR parts 240 through 247, and 255 through 258. The existing part 257 criteria include general environmental performance standards addressing eight major topics: Floodplains (§ 257.3–1), endangered species (§ 257.3–2), surface water (§ 257.3–3), ground water (§ 257.3–4), land application (§ 257.35), disease (§ 257.3–6), air (§ 257.3–7), and safety (§ 257.3–8). EPA has also established regulations for RCRA subtitle D landfills that accept conditionally exempt small quantity generator hazardous wastes, and household hazardous wastes (*i.e.,* "municipal solid waste") at 40 CFR Part 258, but these are of limited relevance to CCRs, which fall into neither category of wastes.

E. Summary of the 1993 and 2000 Regulatory Determinations

Section 3001(b)(3)(A)(i) of RCRA (known as the Bevill exclusion or exemption) excluded certain large-volume wastes generated primarily from the combustion of coal or other fossil fuels from being regulated as hazardous waste under subtitle C of RCRA, pending completion of a Report to Congress required by Section 8002(n) of RCRA and a determination by the EPA Administrator either to promulgate regulations under RCRA subtitle C or to determine that such regulations are unwarranted.

In 1988, EPA published a Report to Congress on Wastes from the Combustion of Coal by Electric Utility Power Plants (EPA, 1988). The report, however, did not address co-managed utility CCRs, other fossil fuel wastes that are generated by utilities, and wastes from non-utility boilers burning any type of fossil fuel. Further, because of other priorities, EPA did not complete its Regulatory Determination on fossil fuel combustion (FFC) wastes at that time.

In 1991, a suit was filed against EPA for failure to complete a Regulatory Determination on FFC wastes (*Gearhart* v. *Reilly* Civil No. 91–2345 (D.D.C.), and on June 30, 1992, the Agency entered into a Consent Decree that established a schedule for EPA to complete the Regulatory Determinations for all FFC wastes. Specifically, FFC wastes were divided into two categories: (1) Fly ash, bottom ash, boiler slag, and flue gas emission control waste from the combustion of coal by electric utilities and independent commercial power

producers, and (2) all remaining wastes subject to RCRA Sections 3001(b)(3)(A)(i) and 8002(n)—that is, large volume coal combustion wastes generated at electric utility and independent power producing facilities that are co-managed together with certain other coal combustion wastes; coal combustion wastes generated at non-utilities; coal combustion wastes generated at facilities with fluidized bed combustion technology; petroleum coke combustion wastes; wastes from the combustion of mixtures of coal and other fuels (*i.e.,* co-burning of coal with other fuels where coal is at least 50% of the total fuel); wastes from the combustion of oil; and wastes from the combustion of natural gas.

On August 9, 1993, EPA published its Regulatory Determination for the first category of wastes (58 FR 42466, *http://www.epa.gov/epawaste/nonhaz/industrial/special/mineral/080993.pdf*), concluding that regulation under subtitle C of RCRA for these wastes was not warranted. To make an appropriate determination for the second category, or "remaining wastes," EPA concluded that additional study was necessary. Under the court-ordered deadlines, the Agency was required to complete a Report to Congress by March 31, 1999, and issue a Regulatory Determination by October 1, 1999.

In keeping with its court-ordered schedule, and pursuant to the requirements of Section 3001(b)(3)(A)(i) and Section 8002(n) of RCRA, EPA prepared a Report to Congress on the remaining FFC wastes in March 1999 (*http://www.epa.gov/epaoswer/other/fossil/volume_2.pdf*). The report addresses the eight study factors required by Section 8002(n) of RCRA for FFC wastes (*see* discussion in section IV. B).

On May 22, 2000, EPA published its Regulatory Determination on wastes from the combustion of fossil fuels for the remaining wastes (65 FR 32214, *http://www.epa.gov/fedrgstr/EPA-WASTE/2000/May/Day-22/f11138.htm*). In its Regulatory Determination, EPA concluded that the remaining wastes were largely identical to the high-volume monofilled wastes, which remained exempt based on the 1993 Regulatory Determination. The high volume wastes simply dominate the waste characteristics even when co-managed with other wastes, and thus the May 2000 Regulatory Determination addressed not only the remaining wastes, but effectively reopened the decision on CCRs that went to monofills.

EPA concluded that these wastes could pose significant risks if not properly managed, although the risk information was limited. EPA identified and discussed a number of documented proven damage cases, as well as cases indicating at least a potential for damage to human health and the environment, but did not rely on its quantitative groundwater risk assessment, as EPA concluded that it was not sufficiently reliable. However, EPA concluded that significant improvements were being made in waste management practices due to increasing state oversight, although gaps remained in the current regulatory regime. On this basis, the Agency concluded to retain the Bevill exemption, and stated we would issue a regulation under subtitle D of RCRA, establishing minimum national standards. Those subtitle D standards have not yet been issued. (Today's proposal could result in the development of the subtitle D standards consistent with the May 2000 Regulatory Determination, or with a revision of the determination, or the issuance of subtitle C standards under RCRA.)

EPA also explicitly stated in the May 2000 Regulatory Determination that the Agency would continue to review the issues, and would reconsider its decision that subtitle C regulations were unwarranted based on a number of factors. EPA noted that its ongoing review would include (1) "the extent to which [the wastes] have caused damage to human health or the environment;" (2) the adequacy of existing regulation of the wastes; (3) the results of an NAS report regarding the adverse human health effects of mercury;[4] and (4) "risk posed by managing coal combustion solid wastes if levels of mercury or other hazardous constituents change due to any future Clean Air Act air pollution control requirements for coal burning utilities" and that these efforts could result in a subsequent revision to the Regulatory Determination. For a further discussion of the basis for the Agency's determination, *see* section IV below.

F. What are CCRs?

CCRs are residuals from the combustion of coal. For purposes of this proposal, CCRs are fly ash, bottom ash, boiler slag (all composed predominantly of silica and aluminosilicates), and flue gas desulfurization materials (predominantly Ca-SO_X compounds) that were generated from processes intended to generate power.

Fly ash is a product of burning finely ground coal in a boiler to produce electricity. Fly ash is removed from the plant exhaust gases primarily by electrostatic precipitators or baghouses and secondarily by wet scrubber systems. Physically, fly ash is a very fine, powdery material, composed mostly of silica. Nearly all particles are spherical in shape.

Bottom ash is comprised of agglomerated coal ash particles that are too large to be carried in the flue gas. Bottom ash is formed in pulverized coal furnaces and is collected by impinging on the furnace walls or falling through open grates to an ash hopper at the bottom of the furnace. Physically, bottom ash is coarse, with grain sizes spanning from fine sand to fine gravel, typically grey to black in color, and is quite angular with a porous surface structure.

Boiler slag is the molten bottom ash collected at the base of slag tap and cyclone type furnaces that is quenched with water. When the molten slag comes in contact with the quenching water, it fractures, crystallizes, and forms pellets. This boiler slag material is made up of hard, black, angular particles that have a smooth, glassy appearance.

Flue Gas Desulfurization (FGD) material is produced through a process used to reduce sulfur dioxide (SO_2) emissions from the exhaust gas system of a coal-fired boiler. The physical nature of these materials varies from a wet sludge to a dry powdered material, depending on the process. The wet sludge generated from the wet scrubbing process using a lime-based reagent is predominantly calcium sulfite, while the wet sludge generated from the wet scrubbing process using a limestone-based reagent is predominantly calcium sulfate. The dry powdered material from dry scrubbers that is captured in a baghouse consists of a mixture of sulfites and sulfates.

CCRs are managed in either wet or dry disposal systems. In wet systems, materials are generally sluiced via pipe to a surface impoundment. The material can be generated wet, such as FGD, or generated dry and water added to facilitate transport (*i.e.* sluiced) through pipes. In dry systems, CCRs are transported in its dry form to landfills for disposal.

1. Chemical Constituents in CCRs

The chemical characteristics of CCRs depend on the type and source of coal, the combustion technology, and the pollution control technology employed. For the 1999 Report to Congress and the May 2000 Regulatory Determination, EPA developed an extensive database

[4] Toxicological Effects of Methylmercury, National Academy of Sciences, July 2000 (*http://books.nap.edu/catalog.php?record_id=9899#toc*). EPA has not taken any actions regarding the May 2000 Regulatory Determination as a result of the NAS report.

on the leaching potential of CCR constituents using the toxicity characteristic leaching procedure (TCLP) from a number of sources. More recent data on the composition of CCRs, including their leaching potential, have been collected and are discussed in the next sub-section. The CCR constituent database (available in the docket to this proposal) contains data on more than 40 constituents. Table 2 presents the median compositions of trace element TCLP leachates of each of the main four types of large volume CCRs (fly ash, bottom ash, boiler slag, and FGD gypsum). (Additional information, including the range of TCLP values, is available in the docket or on-line in the documents identified in the footnotes to the following table.)

TABLE 2—TCLP MEDIAN COMPOSITIONS OF COAL-FIRED UTILITY LARGE-VOLUME CCRS [5] (MG/L)

Constituent	Fly ash	Bottom ash	Boiler slag	FGD
As	0.066	0.002	0.002	0.290
Ba	0.289	0.290	0.260	0.532
B	0.933	0.163	n/a	—
Cd	0.012	0.005	0.0018	0.010
Cr^{VI}	0.203	0.010	0.003	0.120
Cu	n/a	n/a	0.050	n/a
Pb	0.025	0.005	0.0025	0.120
Hg	0.0001	0.0001	0.0002	0.0001
Se	0.020	0.0013	0.0025	0.280
Ag	0.005	0.0050	0.0001	0.060
V	0.111	0.0050	0.010	—
Zn	0.285	0.015	0.075	—

n/a = data not available.
-- = too few data points to calculate statistics.
Source: Data from supporting documentation to the 1993 Regulatory Determination; values below the detection limit were treated as one-half the detection limit.

The composition of FGD gypsum depends on the position within the air emissions control system where the SO_2 component is subject to scrubbing: If scrubbing takes place up stream of the removal of fly ash particulates, the FGD would actually comprise a mix of both components. Table 3 presents mean TCLP trace element compositions of FGD gypsum generated by a scrubbing operation that is located down stream from the particulate collection elements of the air emissions control system; it therefore represents an 'end member' FGD gypsum.

TABLE 3—FGD GYPSUM TCLP COMPOSITIONS (MG/L) FROM: (1) TWO OHIO POWER PLANTS *[6] (MEAN DATA); (2) 12 SAMPLES OF COMMERCIAL WALLBOARD PRODUCED FROM SYNTHETIC GYPSUM **[7] (MEDIAN DATA)

Constituent	Cardinal Plant *	Bruce Mansfield Plant *	Synthetic Gypsum **
As	<0.006	0.0075	0.00235
Ba	0.373	0.270	0.043
B	0.137	0.0255	n/a
Cd	0.00167	0.00055	0.00145
Cr	0.00587	0.00575	0.0047
Cu	<0.001	<0.001	n/a
Pb	<0.003	<0.003	0.0006
Hg	1.8×10^{-5}	2.6×10^{-6}	<0.0003
Se	0.0123	<0.011	0.044
V	<0.001	0.002	n/a
Zn	0.170	0.0560	n/a
Ag	n/a	n/a	<0.00005

n/a = data not available.

The contaminants of most environmental concern in CCRs are antimony, arsenic, barium, beryllium, cadmium, chromium, lead, mercury, nickel, selenium, silver and thallium. Although these metals rarely exceed the RCRA hazardous waste toxicity characteristic (TC), because of the mobility of metals and the large size of typical disposal units, metals (especially arsenic) have leached at levels of concern from unlined landfills and surface impoundments. In addition, it should also be noted that since the Agency announced its May 2000 Regulatory Determination, EPA has revised the maximum contaminant level (MCL) for arsenic,[8] without a corresponding revision of the TC. As a result, while arsenic levels are typically well below the TC, drinking water risks from contaminated groundwater due to releases from landfills and impoundments may still be high. Also, as discussed below, a considerable body of evidence has emerged indicating that the TCLP alone is not a good predictor

[5] Compiled from Tables 3–1, 3–3, 3–5 and 3–7, in: Technical Background Document for the Report to Congress on Remaining Wastes from Fossil Fuel Combustion: Waste Characteristics, March 15, 1999 (*http://www.epa.gov/epawaste/nonhaz/industrial/special/fossil/ffc2_399.pdf*).

[6] Compiled from: Table 3–5, in: An Evaluation of Flue Gas Desulfurization Gypsum for Abandoned Mine Land Reclamation, Rachael A. Pasini, Thesis, The Ohio State University, 2009.

[7] Compiled from: Table 10, in: Fate of Mercury in Synthetic Gypsum Used for Wallboard Production, J. Sanderson *et al.,* USG Corporation, Final Report prepared for NETL, June 2008.

of the mobility of metals in CCRs under a variety of different conditions. This issue is further discussed in the following subsection.

From Tables 2 and 3 above, it is evident that each of the main four types of CCRs, when subjected to a TCLP leach test, yields a different amount of trace element constituents. EPA is soliciting public comments on whether, in light of these differences in the mobility of hazardous metals between the four major types of CCRs, regulatory oversight should be equally applied to each of these CCR types when destined for disposal.

2. Recent EPA Research on Constituent Leaching From CCRs

Changes to fly ash and other CCRs are expected to occur as a result of increased use and application of advanced air pollution control technologies in coal-fired power plants. These technologies include flue gas desulfurization (FGD) systems for SO_2 control, selective catalytic reduction (SCR) systems for NO_X control, and activated carbon injection systems for mercury control. These technologies are being installed or are expected to be installed in response to federal regulations, state regulations, legal consent decrees, and voluntary actions taken by industry to adopt more stringent air pollution controls. Use of more advanced air pollution control technology reduces air emissions of metals and other pollutants in the flue gas of a coal-fired power plant by capturing and transferring the pollutants to the fly ash and other air pollution control residues. The impact of changes in air pollution control on the characteristics of CCRs and the leaching potential of metals is the focus of ongoing research by EPA's Office of Research and Development (ORD). This research is being conducted to identify any potential cross-media transfers of mercury and other metals and to meet EPA's commitment in the Mercury Roadmap (*http://www.epa.gov/hg/roadmap.htm*) to report on the fate of mercury and other metals from implementation of multi-pollutant control at coal-fired power plants.

Over the last few years, in cooperation with Electric Power Research Institute (EPRI) and the utility industry, EPA obtained 73 different CCRs from 31 coal-fired boilers spanning a range of coal types and air pollution control configurations. Samples of CCRs were collected to evaluate differences in air pollution control, such as addition of post-combustion NO_X controls (*i.e.,* selective catalytic reduction), FGD scrubbers, and enhanced sorbents for mercury capture. A series of reports have been developed to document the results from the ORD research: The first report (Characterization of Mercury-Enriched Coal Combustion Residuals from Electric Utilities Using Enhanced Sorbents for Mercury Control, EPA–600/R–06/008, February 2006; *http://www.epa.gov/ORD/NRMRL/pubs/600r06008/600r06008.pdf*) was developed to document changes in fly ash resulting from the addition of sorbents for enhanced mercury capture. The second report (Characterization of Coal Combustion Residuals from Electric Utilities Using Wet Scrubbers for Multi-Pollutant Control; EPA–600/R–08/077, July 2008, *http://www.epa.gov/nrmrl/pubs/600r08077/600r08077.pdf*) was developed to evaluate residues from the expanded use of wet scrubbers. The third report (Characterization of Coal Combustion Residues from Electric Utilities—Leaching and Characterization Data, EPA–600/R–09/151, December 2009, *http://www.epa.gov/nrmrl/pubs/600r09151/600r09151.html*) updates the data in the earlier reports and provides data on an additional 40 samples to cover the range of coal types and air pollution control configurations, including some not covered in the two previous reports.

Data from these studies is being used to identify potential trends in the composition and leaching behavior of CCRs resulting from changes in air pollution controls. Summary data on the higher volume CCRs is provided for 34 fly ashes (Table 4) and 20 FGD gypsum samples (Table 5). The report provides analysis of other types of CCRs (*i.e.,* non-gypsum scrubber residues (primarily scrubber sludge containing calcium sulfite), blended CCRs (non-gypsum scrubber residues, fly ash, and lime), and wastewater treatment filter cake). For each of the metals that are reported (Sb, As, Ba, B, Cd Cr, Co, Hg, Pb, Mo, Se, and Tl) from the leaching test results, "box and whisker" plots have been developed comparing the different materials and providing comparison to field leachate data.

The purpose of this research was to try to understand how power plant air pollution control residues, and their leaching potential, are likely to change with the increased use of multi-pollutant and mercury controls, anticipated in response to new Clean Air Act regulations. An initial focus was to identify appropriate leach testing methods to assess leaching potential under known or expected CCR management conditions (beneficial use or disposal). The EPA's Science Advisory Board and the National Academy of Sciences have in the past raised concerns over the use of single-point pH tests that do not reflect the range of actual conditions under which wastes are plausibly managed.[9] Because metal leaching rates change with changing environmental conditions (especially pH), single point tests may not be the most accurate predictor of potential environmental release of mercury or other metals because they do not provide estimates of leaching under some disposal or reuse conditions that can plausibly occur.

In response to these concerns, a review of available leaching test methods was conducted. A leaching test method[10] based on research conducted at Vanderbilt University in the United States and the Energy Research Center of the Netherlands, among others, was selected to address some of these concerns.

While EPA/ORD's research relied on the Vanderbilt method, similar methods (i.e, tests evaluating leaching at different plausible disposal pH values) have been used to evaluate the leaching behavior and support hazardous waste listings of other materials as well.[11] Because of their general utility, the research methods have been drafted into the appropriate format and are being evaluated for inclusion in EPA's waste analytical methods guidance, SW–846[12]

[8] *See http://www.epa.gov/safewater/arsenic/regulations.html.*

[9] National Academy of Sciences, Managing Coal Combustion Residues in Mines; The National Academies Press, Washington, DC, 2006.

[10] Kosson, D.S.; Van Der Sloot, H.A.; Sanchez, F.; Garrabrants, A.C., An Integrated Framework for Evaluating Leaching in Waste Management and Utilization of Secondary Materials. Environmental Engineering Science 2002, 19, 159–204.

[11] *See* 65 FR 67100 (November 8, 2000) for a discussion of EPA's use of multi-pH leach testing in support of listing a mercury-bearing sludge from VCM–A production, and EPA/600/R–02/019, September 2001, *Stabilization and Testing of Mercury Containing Wastes: Borden Catalyst.*

[12] Five different methods have been developed for use depending upon the information needed and the waste form.

1. Draft Method 1313—Liquid-Solid Partitioning as a Function of Eluate pH using a Parallel Batch Extraction Test

2. Draft Method 1314—Liquid-Solid Partitioning as a Function of Liquid-Solid Ratio Using an Up-flow Column Test

3. Draft Method 1315—Mass Transfer in Monolithic or Compacted Granular Materials Using a Semi-dynamic Tank Leach Test

4. Draft Method 1316—Liquid-Solid Partitioning as a Function of Liquid-Solid Ratio Using a Parallel Batch Test

5. Draft Method 1317—Concise Test for Determining Consistency in Leaching Behavior

The test methods were developed to identify differences in the constituent leaching rate resulting from the form of the tested material, as well as the effects of pH and the liquid/solid ratio. Fine grained

Continued

to facilitate their routine use for evaluating other wastes or reuse materials (*http://www.epa.gov/osw/hazard/testmethods/sw846/index.htm*).

For the ORD research, equilibrium batch test methods that identify changes in leaching at different pH and liquid/solid ratio values were used to evaluate CCRs resulting from different air pollution controls at coal-fired power plants. This allowed evaluation of leaching potential over a range of field conditions under which CCRs are anticipated to be managed during either disposal or beneficial use applications. Landfill field leachate data from EPA [13] and EPRI [14] studies were used to establish the range of pH conditions expected to be found in actual disposal. From this data set, and excluding the extreme values (below 5th percentile and above 95th percentile), a pH range of 5.4 and 12.4 was determined to represent the range of plausible management conditions (with regard to pH) for CCRs. This means that approximately 5% of the values had a pH below 5.4 and approximately 5% of the values had a pH greater than 12.4. However, it is important to note that 9 of the 34 fly ash samples generated a pH in deionized water (*i.e.,* the pH generated by the tested material itself) below pH 5.4. Therefore, these results might understate CCR leaching potential if actual field conditions extend beyond the pH range of 5.4 and 12.4.

In Tables 4 and 5, the total metals content of the fly ash and FGD gypsum samples evaluated is provided along with the leach test results. Reference indicators (*i.e.,* MCL,[15] TC,[16] and DWEL [17]) are also provided to provide some context in understanding the leach results. It is critical to bear in mind that the leach test results represent a distribution of potential constituent release from the material as disposed or used on the land. The data presented do not include any attempt to estimate the amount of constituent that may reach an aquifer or drinking water well. Leachate leaving a landfill is invariably diluted in ground water to some degree when it reaches the water table, or constituent concentrations are attenuated by sorption and other chemical reactions in groundwater and sediment. Also, groundwater pH may be different from the pH at the site of contaminant release, and so the solubility and mobility of leached contaminants may change when they reach groundwater. None of these dilution or attenuation processes is incorporated into the leaching values presented. That is, no dilution and attenuation factor, or DAF,[18] has been applied to these results. Thus, comparisons with regulatory health values, particularly drinking water values, must be done with caution. Groundwater transport and fate modeling would be needed to generate an assessment of the likely risk that may result from the CCRs represented by these data.

In reviewing the data and keeping these caveats in mind, conclusions to date from the research include:

(1) Review of the fly ash and FGD gypsum data (Tables 4 and 5) show a range of total constituent concentration values that vary over a much broader range than do the leach data. This much greater range of leaching values only partially illustrates what more detailed review of the data shows: That for these CCRs, the rate of constituent release to the environment is affected by leaching conditions (in some cases dramatically so), and that leaching evaluation under a single set of conditions may, to the degree that single point leach tests fail to consider actual management conditions, lead to inaccurate conclusions about expected leaching in the field.

(2) Comparison of the ranges of totals values and leachate data from the complete data set supports earlier conclusions 51[19] [20] [21] that the rate of constituent leaching cannot be reliably estimated based on total constituent concentration alone.

(3) From the more complete data in Report 3, distinctive patterns in leaching behavior have been identified over the range of pH values that would plausibly be encountered for CCR disposal, depending on the type of material sampled and the element. This reinforces the above conclusions based on the summary data.

(4) Based on the data (summarized in Table 4), on the leach results from evaluation of 34 fly ashes across the plausible management pH range of 5.4 to 12.4,

○ The leach results at the upper end of the leachate concentration range exceed the TC values for As, Ba, Cr, and Se (indicated by the shading in the table).

(5) Based on the data (summarized in Table 5), on the leach results from evaluation of 20 FGD gypsums across the plausible management pH range of 5.4 to 12.4,

○ The leach results at the upper end of the leachate concentration ranges exceed the TC value for Se.

(6) The variability in total content and the leaching of constituents within a material type (*e.g.,* fly ash, gypsum) is such that, while leaching of many samples exceeds one or more of the available health indicators, many of the other samples within the material type may be lower than the available regulatory or health indicators.

materials (e.g., particle sizes of 2 mm or less) will have greater contact with leaching solutions (in a lab test) or rainfall (in the environment) than will solid materials such as concrete or CCRs that are pozzolanic when exposed to water. In applying these methods to CCRs or other materials, batch tests that are designed to reach equilibrium are used with fine-grained or particle-size reduced materials. For solid materials, the tests were designed to evaluate constituent leaching from the exposed surface (leaching of constituents that are either at the surface, or that have migrated over time to the surface), can be used. Testing at equilibrium provides an upper bound estimate of constituent leaching at each set of conditions tested. In some instances, these results may represent the real situation, since when rainfall percolation through a material in the environment is slow, the constituent concentration in the water passing through the materials may reach, or nearly reach equilibrium. Testing of solid (or "monolithic") materials evaluates constituent leaching from materials of low permeability for which most rainfall flows around the material rather than percolating through it. This results in less contact between the rainfall and the material, and so typically, a lower rate of constituent leaching. For monolithic materials, both the equilibrium and monolith tests are conducted to understand the likely initial rates of leaching from the monolith (while it remains solid), and the upper bound on likely leaching, when the monolith degrades over time, exposing more surface area to percolating rainwater, and typically, higher constituent leaching rates. It may also be possible to avoid the cost of testing solid, monolithic materials, if the material leaches at low constituent concentrations under the equilibrium testing conditions.

[13] U.S. EPA (2000) Characterization and evaluation of landfill leachate, Draft Report. 68–W6–0068, Sept 2000.

[14] EPRI (2006) Characterization of Field Leachates at Coal Combustion Product Management Sites: Arsenic, Selenium, Chromium, and Mercury Speciation, EPRI Report Number 1012578. EPRI, Palo Alto, CA and U.S. Department of Energy, Pittsburgh, PA.

[15] MCL is the maximum concentration limit for contaminants in drinking water.

[16] TC is the toxicity characteristic and is a threshold for hazardous waste determinations.

[17] DWEL is the drinking water equivalent level to be protective for non-carcinogenic endpoints of toxicity over a lifetime of exposure. DWEL was developed for chemicals that have a significant carcinogenic potential and provides the risk manager with evaluation on non-cancer endpoints, but infers that carcinogenicity should be considered the toxic effect of greatest concern (*http://www.epa.gov/safewater/pubs/gloss2.html#D*).

[18] For example, EPA used a generic DAF values of 100 in the Toxicity Characteristic final regulation. (*See:* 55 FR 11827, March 29, 1990)

[19] Senior, C; Thorneloe, S.; Khan, B.; Goss, D. Fate of Mercury Collected from Air Pollution Control Devices; EM, July 2009, 15–21.

[20] U.S. EPA, Characterization of Mercury-Enriched Coal Combustion Residuals from Electric Utilities Using Enhanced Sorbents for Mercury Control, EPA–600/R–06/008, Feb. 2006; *http://www.epa.gov/ORD/NRMRL/pubs/600r06008/600r06008.pdf.*

[21] U.S. EPA, Characterization of Coal Combustion Residuals from Electric Utilities Using Wet Scrubbers for Multi-Pollutant Control; EPA–600/R–08/077, July 2008, *http://www.epa.gov/nrmrl/pubs/600r08077/600r08077.pdf.*

Additional or more refined assessment of the dataset may allow some distinctions regarding release potential to be made among particular sources of some CCRs, which may be particularly useful in evaluating CCRs in reuse applications.

EPA anticipates development of a fourth report that presents such additional analysis of the leaching data to provide more insight into constituent release potential for a wider range of CCR management scenarios, including beneficial use applications. This will include calculating potential release rates over a specified time for a range of management scenarios, including use in engineering and commercial applications using probabilistic assessment modeling (Sanchez and Kosson, 2005).[22] This report will be made publicly available when completed.

Finally, the Agency recognizes that this research has generated a substantial amount of data, and believes this data set can be useful as a reference for assessing additional CCR samples in the future. The docket for today's rule therefore includes the full dataset, in the form of a database to provide easier access to EPA's updated leach data.[23]

Table 4. Preliminary Leach Results for 5.4<pH< 12.4 and at "own pH" from Evaluation of Thirty-Four Fly Ashes.

	Hg	Sb	As	Ba	B	Cd	Cr	Co	Pb	Mo	Se	TI
Total in Material (mg/kg)	0.01 – 1.5	3 - 14	17 - 510	590 – 7,000	NA	0.3 – 1.8	66 - 210	16 - 66	24 - 120	6.9 - 77	1.1 - 210	0.72 - 13
Leach results (ug/L)	<0.01-0.50	<0.3 – 11,000	0.32 – 18,000	50 – 670,000	210 – 270,000	<0.1 - 320	<0.3 – 7,300	<0.3-500	<0.2 - 35	<0.5 – 130,000	5.7 – 29,000	<0.3 - 790
TC (ug/L)	200	-	5,000	100,000	-	1,000	5,000	-	5,000	-	1,000	-
MCL (ug/L)	2	6	10	2,000	7,000 DWEL	5	100	-	15	200 DWEL	50	2

Note: The dark shading is used to indicate where there could be a potential concern for a metal when comparing the leach results to the MCL, DWEL, or concentration level used to determine the TC. Note that MCL and DWEL values are intended to represent concentrations at a well and the point of exposure; leachate dilution and attenuation processes that would occur in groundwater before leachate reaches a well are not accounted for, and so MCL and DWEL values cannot be directly compared with leachate values.

[22] Sanchez, F., and D. S. Kosson, 2005. Probabilistic approach for estimating the release of contaminants under field management scenarios. *Waste Management* 25(5), 643–472 (2005).

[23] The database, called "Leach XS Lite" can be used to estimate the leaching potential of CCRs under any specified set of pH or infiltration conditions that may occur in the field. While the database is presented as a "Beta" version, and may be further developed, the data presented in the data base are final data, from the three EPA research reports cited above.

Table 5. Preliminary Leach Results for 5.4<pH< 12.4 and at "own pH" from Evaluation of Twenty FGD Gypsums.

	Hg	Sb	As	Ba	B	Cd	Cr	Co	Pb	Mo	Se	TI
Total in Material (mg/kg)	0.01 – 3.1	0.14 – 8.2	0.95 - 10	2.4 - 67	NA	0.11 – 0.61	1.2 – 20	0.77 – 4.4	0.51 - 12	1.1 - 12	2.3 - 46	0.24 – 2.3
Leach results (ug/L)	<0.01-0.66	<0.3 - 330	0.32 – 1,200	30 - 560	12 – 270,000	<0.2 - 370	<0.3 – 240	<0.2 – 1,100	<0.2 - 12	0.36 – 1,900	3.6 – 16,000	<0.3 – 1,100
TC (ug/L)	200	-	5,000	100,000	-	1,000	5,000	-	5,000	-	1,000	-
MCL (ug/L)	2	6	10	2,000	7,000 DWEL	5	100	-	15	200 DWEL	50	2

Note: The dark shading is used to indicate where there could be a potential concern for a metal when comparing the leach results to the MCL, DWEL, or concentration level used to determine the TC. Note that MCL and DWEL values are intended to represent concentrations at a well and the point of exposure; leachate dilution and attenuation processes that would occur in groundwater before leachate reaches a well are not accounted for, and so MCL and DWEL values cannot be directly compared with leachate values.

G. Current Federal Regulations or Standards Applicable to the Placement of CCRs in Landfills and Surface Impoundments.

CCR disposal operations are typically regulated by state solid waste management programs, although in some instances, surface impoundments are regulated under the states water programs. However, there are limited regulations of CCRs at the federal level.

The discharge of pollutants from CCR management units to waters of the United States are regulated under the National Pollutant Discharge Elimination System (NPDES) at 40 CFR Part 122, authorized by the Clean Water Act (CWA). NPDES permits generally specify an acceptable level of a pollutant or pollutant parameter in a discharge. NPDES permits ensure that a state's mandatory standards for clean water and the federal minimums are being met. A number of the damage cases discussed in the preamble also involved surface water contamination, which were violations of the NPDES permit requirements.

II. New Information on the Placement of CCRs in Landfills and Surface Impoundments

A. New Developments Since the May 2000 Regulatory Determination.

Since publication of the May 2000 Regulatory Determination, new information and data have become available, including additional damage cases, risk modeling, updated information on current management practices and state regulations associated with the disposal of CCRs, petitions from environmental and citizens groups for EPA to develop rules for the management of CCRs, an industry voluntary agreement on how they would manage CCRs, and a proposal from environmental and citizens groups for a CCR rule. Much of this new information was made available to the public in August 2007 through a Notice of Data Availability (NODA) at 72 FR 49714 (*http://www.epa.gov/fedrgstr/EPA-WASTE/2007/August/Day-29/f17138.pdf*). EPA has received extensive comments from environmental groups, industry, states and others in response to the NODA and as we have moved toward rulemaking. All of the comments and subsequent information we have received are included in the docket to this proposal. The new information on risks and the damage cases are discussed briefly below and in more detail in subsequent sections of this proposed rule; a more detailed discussion of this new information is discussed in other sections of the preamble.

At the time of the May 2000 Regulatory Determination, the Agency was aware of 14 cases of proven damages [24] and 36 cases of potential damages resulting from the disposal of

[24] As discussed later in the preamble, 11 of these documented cases of damage were to human health and the environment, while four of these cases were cases of ecological damage, one of which has now been reclassified as a potential damage case.

CCRs. The Agency has since learned of an additional 13 cases of proven damages and 4 cases of potential damages, including a catastrophic release of CCRs from a disposal unit at the Tennessee Valley Authority (TVA) Kingston facility in Harriman, Tennessee in December 2008. In total, EPA has documented 27 cases of proven damages and 40 cases of potential damages resulting from the disposal of CCRs. Proven damage cases have been documented in 12 states, and potential damage cases—in 17 states. *See* section II.C. and the Appendix to this proposal for more detailed discussions of EPA's CCR damage cases.

As part of the process for making the May 2000 Regulatory Determination for CCRs, EPA prepared a draft quantitative risk assessment. However, because of time constraints, the Agency was unable to address public comments on the draft risk assessment in time for the Regulatory Determination. Between 2000 and 2006, EPA addressed the public comments and updated the quantitative risk assessment for the management of CCR in landfills and surface impoundments. The revised risk assessment was made available for public comment in the August 2007 draft report titled "Human and Ecological Risk Assessment of Coal Combustion Wastes."

In the May 2000 Regulatory Determination, the Agency concluded that the utility industry had made significant improvements in its waste management practices for new landfills and surface impoundments since the practices reflected in the 1999 Report to Congress, and that most state regulatory programs had similarly improved. To verify its conclusion, in 2005, the U.S. Department of Energy (DOE) and EPA conducted a joint study to collect more recent information on the management practices for CCRs by the electric power industry, and state programs in 11 states. The results of the study were published in the report titled "Coal Combustion Waste Management at Landfills and Surface Impoundments, 1994–2004." Additionally, we are aware of at least one state (Maryland) that has recently amended its regulatory requirements for the management of CCRs.

In February 2004, 125 environmental and citizens groups petitioned the EPA Administrator for a rulemaking prohibiting the disposal of coal power plant wastes into groundwater and surface water until such time as EPA promulgates federally enforceable regulations pursuant to RCRA. A copy of the petition is available at *http://www.regulations.gov/fdmspublic/component/main?/main=DocumentDetail&o=09000064801cf8d1.*

In October 2006, the utility industry through their trade association, the Utility Solid Waste Activities Group (USWAG) submitted to EPA a "Utility Industry Action Plan for the Management of Coal Combustion Products." The plan outlines the utility industry's commitment to adopt groundwater performance standards and monitoring, conduct risk assessments prior to placement of CCRs in sand and gravel pits, and to consider dry-handling prior to constructing new disposal units.

In January 2007, environmental and citizens groups submitted to EPA a "Proposal for the Federal Regulation of Coal Combustion Waste." The proposal provides a framework for comprehensive regulation under subtitle D of RCRA for waste disposed of in landfills and surface impoundments generated by coal-fired power plants. Then in July 2009, environmental and citizens groups filed a second petition requesting that the EPA Administrator promulgate regulations that designate CCRs as hazardous waste under subtitle C of RCRA.[25] In support of their petition, the environmental groups cited "numerous reports and data produced by the Agency since EPA's final Regulatory Determination * * * which quantify the waste's toxicity, threat to human health and the environment, inadequate state regulatory programs, and the damage caused by mismanagement." A copy of the petition is available in the docket to this proposal. The Agency has, as yet, not made a decision as to whether to lift the Bevill exemption, and, while it has determined that federal regulation is appropriate, it has not made a determination as to whether regulations should be promulgated under subtitles C or D of RCRA. Consequently, EPA is deferring its response to the petitioner. However, the preamble discusses the issues raised in these petitions at length. In addition, the Agency is deferring its proposed response to the petitioners' request regarding the placement of CCRs in minefills as the Agency will work with OSM to address the management of CCRs in minefills in a separate rulemaking action. (*See* discussion in other parts of the preamble for the Agency's basis for its decisions.)

In August 2007, EPA published a NODA (72 FR 49714, *http://www.epa.gov/fedrgstr/EPA-WASTE/2007/August/Day-29/f17138.htm*) which made public, and sought comment on, the new information we received since the May 2000 Regulatory Determination through 2007, except for the July 2009 petition entitled, *Petition for Rulemaking Pursuant to Section 7004(a) of the Resource Conservation and Recovery Act Concerning the Regulation of Coal Combustion Waste and the Basis for Reconsideration of the 2000 Regulatory Determination Concerning Wastes from the Combustion of Fossil Fuels.* The new information included the joint DOE and EPA report entitled: *Coal Combustion Waste Management at Landfills and Surface Impoundments, 1994–2004;* the draft risk assessment; and EPA's damage case assessment. EPA also included in the docket to the NODA the February 2004 Petition for Rulemaking submitted by a number of environmental and citizens' groups to prohibit the placement or disposal of CCRs into ground water and surface water; and two suggested approaches for managing CCRs in landfills and surface impoundments. One approach is the Voluntary Action Plan that was formulated by the electric utility industry. The second approach was the January 2007 framework prepared by a number of environmental and citizens' groups proposing federal regulation under subtitle D of RCRA for CCRs generated by U.S. coal-fired power plants and disposed of in landfills and surface impoundments. The Agency received a total of 396 comments on the NODA from 375 citizens and citizen and environmental groups, 16 industry groups, and 5 state and local government organizations. In general, citizens, citizens groups, and environmental groups commented that state regulations are inadequate and called on EPA to develop enforceable regulations for the disposal of CCRs under the hazardous waste provisions of RCRA. Industry groups, on the other hand, stated that the significant recent improvement in industry management and state regulatory oversight of CCR disposal demonstrates that the conditions that once led EPA to determine that federal subtitle D regulations were warranted no longer exist and therefore, further development of subtitle D regulations is no longer necessary. In September 2008, the Environmental Council of the States (ECOS) issued a resolution that states already have regulations in place that apply to CCRs, and a federal regulation is not necessary. The 2008 ECOS resolution was revised in March 2010 and calls upon EPA to conclude that

[25] This rulemaking petition was filed by: Earthjustice; the Sierra Club; the Environmental Integrity Project; the Natural Resources Defense Council; the Southern Environmental Law Center; and Kentucky Resources Council.

additional federal CCR regulations would be duplicative of most state programs, are unnecessary, and should not be adopted, but if adopted must be developed under RCRA subtitle D rather than RCRA subtitle C (*see http://www.ecos.org/files/4018_file_Resolution_08_14_2010_version.doc*). Comments on the NODA are available in the docket to the NODA at *http://www.regulations.gov,* docket number EPA–HQ–RCRA–2006–0796.

Finally, in July and August of 2008, EPA conducted a peer review of the 2007 draft risk assessment "Human and Ecological Risk Assessment of Coal Combustion Wastes." The peer review was conducted by a team of five experts in groundwater modeling, environmental fate and transport modeling, and human health and ecological risk assessment. EPA has revised its risk assessment based on the peer review comments. Results of the peer review and the revised risk assessment are included in the docket to this proposal. Also, *see* section II.B. below and the document titled "What Are the Environmental and Health Effects Associated with Disposing of CCRs in Landfills and Surface Impoundments?" available from the docket to this notice for more detailed discussions of the risk assessment.

In summary, since the May 2000 Regulatory Determination, the Agency has (1) Documented an additional 17 cases of damage from the disposal of CCRs (13 proven and 3 potential); (2) gathered additional information on industry practices; (3) revised its risk assessment, based on comments received on the 1999 Report to Congress, conducted a peer review of the revised risk assessment, and further revised its risk assessment based on peer review comments and comments received on the August 2007 NODA; (4) received a voluntary action plan from the utility industry; (5) received two petitions for rulemaking from environmental and citizens groups; and (6) received a proposal for regulating the management of CCRs in landfills and surface impoundments from environmental and citizens groups. EPA has considered all of this information in making the decisions on the proposals in this notice.

B. CCR Risk Assessment

In making the May 2000 Regulatory Determination for CCRs, EPA prepared a draft quantitative risk assessment based on groundwater modeling. However, commenters from all sides raised fundamental scientific questions with the study, and raised issues that went beyond groundwater modeling capability at the time. EPA was unable to address these issues in the available time, and therefore did not rely on the draft risk assessment as part of its basis in making its May 2000 Regulatory Determination; rather we relied on the damage cases identified, as well as other information. In this regard, it is worth noting that EPA did not conclude that the available information regarding the extent or nature of the risks were equivocal. Rather, EPA noted that we had not definitively assessed the ground water risks, due to the criticisms of our draft risk assessment, but still concluded that there were "risks from arsenic that we cannot dismiss." Largely what drove the risks in the original risk assessment were the old units that lacked liners and ground water monitoring (for landfills, only 57% of the units had liners and 85% of the units had ground water monitoring, while for surface impoundments, only 26% of the units had liners and only 38% of the units had ground water monitoring).

Between 2000 and 2006, EPA addressed public comments and updated the quantitative risk assessment for the management of CCRs in landfills and surface impoundments. The purpose of the risk assessment is to identify CCR constituents, waste types, liner types, receptors, and exposure pathways with potential risks and to provide information that EPA can use as we continue to evaluate the risks posed by CCRs disposed of in landfills and surface impoundments. The risk assessment was designed to develop national human and ecological risk estimates that are representative of onsite CCR management settings throughout the United States. A revised draft risk assessment was made available to the public through the August 2007 NODA (which is discussed in other sections of the preamble) and is available at *http://www.regulations.gov/fdmspublic/component/main?main=DocumentDetail&o=090000648027b9cc*.

EPA submitted the revised draft risk assessment report, together with public comments on the report in response to the 2007 NODA, to a peer review panel. EPA completed the risk assessment, taking into account peer review comments, in a final report titled "Human and Ecological Risk Assessment of Coal Combustion Wastes," (September 2009). The report, peer review comments, and EPA's response to the peer review comments are available in the docket for this proposal.

For purposes of this rulemaking, EPA defined the target level of protection for human health to be an incremental lifetime cancer risk of no greater than one in 100,000 (10^{-5}) for carcinogenic chemicals and a hazard quotient of 1.0 for noncarcinogenic chemicals. The hazard quotient is the ratio of an individual's chronic daily dose of a constituent to the reference dose for that constituent, where the reference dose is an estimate of the daily dose that is likely to be without appreciable risk of deleterious effects over a lifetime. These are the target levels that EPA typically uses in its listing decisions. (*See,* for example, the final rule for Nonwastewaters From Productions of Dyes, Pigments, and Food, Drug, and Cosmetic Colorants (70 FR 9144) at *http://www.epa.gov/wastes/laws-regs/state/revision/frs/fr206.pdf*.)

The results of this risk assessment provide further confirmation of the high risks presented in the mismanagement of CCRs disposed in landfills and surface impoundments. The assessment does confirm that there are methods to manage CCRs safely, although it calls into question the reliability of clay liners, especially in surface impoundments, and it points to very high potential risks from unlined surface impoundments.

Specifically, the revised draft CCR risk assessment presents results at a typical exposure (50th percentile), as well as a high-end exposure (90th percentile) risk based on a probabilistic analysis. The revised draft CCR risk assessment results at the 90th percentile suggest that the management of CCRs in unlined or clay-lined waste management units (WMUs) result in risks greater than the risk criteria of 10^{-5} for excess cancer risk to humans or an HQ greater than 1 for noncancer effects to both human and ecological receptors which are the criteria generally used in EPA's listing determination procedure.[26] While still above the criteria, clay-lined units tended to have lower risks than unlined units. However, it was the composite-lined units that effectively reduced risks from all pathways and constituents below the risk criteria. More specifically:

○ For humans exposed via the groundwater-to-drinking-water pathway, estimated risks from clay-lined landfills that dispose of CCRs or

[26] EPA's hazardous waste listing determination policy is described in the notice of proposed rulemaking for wastes from the dye and pigment industries at 59 FR 66075–66077 *available at http://www.epa.gov/fedrgstr/EPA-WASTE/1994/December/Day-22/pr-98.html* and in the final rule for Nonwastewaters From Productions of Dyes, Pigments, and Food, Drug, and Cosmetic Colorants (70 FR 9144) at *http://www.epa.gov/wastes/laws-regs/state/revision/frs/fr206.pdf*.

CCRs co-managed with coal refuse are lower than those for unlined landfills. However, the 90th percentile risk estimates, for arsenic that leaks from clay-lined landfills are still above the risk criteria—as high as 1 in 5,000 individual lifetime excess cancer risk.[27] When landfills are unlined, estimated risks above the criteria occur for antimony and molybdenum, as well as arsenic (as high as 1 in 2,000 individual lifetime excess cancer risk). In addition to arsenic, clay-lined fluidized bed combustion (FBC) landfills also presented estimated 90th percentile risks above the criteria for antimony. However, unlined FBC landfills differed in that they were estimated to exceed the risk criteria only for arsenic.[28] At the 50th percentile, only trivalent arsenic from CCRs codisposed with coal refuse was estimated to exceed the risk criteria with cancer risks of 1 in 50,000.

○ Arsenic and cobalt were the constituents with the highest estimated risks for surface impoundments. Clay-lined surface impoundments were estimated to present 90th percentile risks above the criteria for arsenic, boron, cadmium, cobalt, molybdenum, and nitrate. The 90th percentile clay-lined impoundment estimated risks and hazard quotients (HQs) were as follows: for arsenic, the estimated risk was as high as 1 in 140; cobalt's estimated HQ as high as 200, while the estimated HQs for boron, cadmium, molybdenum and nitrate ranged from 2 to 20. The 90th percentile unlined surface impoundment estimates were above the criteria for constituents that include arsenic, lead, cobalt and selenium: estimated arsenic cancer risks are as high as 1 in 50, and non-cancer effects estimates for cobalt ranged from an estimated HQ of 0.9 to 500 depending on whether CCRs were co-managed with coal refuse. At the 50th percentile, the only surface impoundment results estimated to exceed the risk criteria were arsenic and cobalt: unlined impoundments had estimated arsenic cancer risks as high as 6 in 10,000, while clay-lined impoundments had estimated arsenic cancer risks as high as 1 in 5,000. The 50th percentile noncancer HQs due to cobalt in drinking water were estimated to be as high as 20 and 6 for unlined and clay-lined surface impoundments, respectively.

○ Composite liners, as modeled in this assessment, effectively reduce risks from all constituents to below the risk criteria for both landfills and surface impoundments at the 90th and 50th percentiles.

○ The model generally predicts that groundwater risks will occur centuries later for landfills than for surface impoundments. For the groundwater-to-drinking water pathway for unlined landfills, arrival times of the peak concentrations at a receptor well peaked in the hundreds or thousands of years, while unlined surface impoundment risks typically peaked within the first 100 years. Clay liners resulted in later arrival of peak risks, nearly always in the thousands of years for landfills but still in the first few hundred years for surface impoundments. Finally, while composite liners often resulted in a failure of the plume to reach groundwater wells, composite-lined landfills with plumes that were estimated to reach groundwater wells eventually had peak arsenic-in-groundwater concentrations at approximately 10,000 years, while composite-lined surface impoundments' plumes peaked in the thousands of years.

○ For humans exposed via the groundwater-to-surface-water (fish consumption) pathway, unlined and clay-lined surface impoundments were estimated to pose risks above the criteria at the 90th percentile. For CCRs managed alone in surface impoundments, these exceedances came from selenium (estimated HQs of 3 and 2 for unlined and clay-lined units, respectively). For CCRs co-managed with coal refuse, these exceedences came from arsenic (3 in 100,000 and 2 in 100,000 estimated excess cancer risks for unlined and clay-lined units, respectively). All 50th percentile surface impoundment risks are estimated to be below the risk criteria. No constituents pose estimated risks above the risk criteria for landfills (including FBC landfills) at the 90th or 50th percentile.

○ EPA also conducted a separate draft fugitive dust screening assessment which indicates that, without fugitive dust controls, there could be exceedances of the National Ambient Air Quality Standards for fine particulate matter in the air at residences near CCR landfills.[29] The 1998 risk assessment[30] also showed risks from inhalation of chromium in fugitive dust but at levels below the criteria.[31]

EPA recognizes that there are significant uncertainties in national risk assessments of this nature, although it did attempt to address potential uncertainties through Monte Carlo and sensitivity analyses. Uncertainties discussed in the revised risk assessment include:

- The locations and characteristics of currently operating facilities;
- The failure to account for direct discharges to surface water;
- Changing conditions over the 10,000-year period modeled;
- Shifting populations and ecological receptors;
- Additive risks from multiple constituents or multiple pathways;
- Clean closure of surface impoundments;
- The speciation and bioavailability of constituents;
- The effect of compacting CCRs before disposal;
- The assumption that all disposal units are above the water table;
- Full mixing of the groundwater plume;
- The choice of iron sorbent in the soil;
- The appropriateness of the leachate data used and the treatment of nondetects;
- The distance to receptor wells and surface water bodies; and
- The potential conservativeness of human health benchmarks.

The Agency, however, does solicit comment on several specific aspects of the underlying risk assessment. In particular, EPA requests comment on whether clay liners designed to meet a $1x10^{-7}$ cm/sec hydraulic conductivity might perform differently in practice than modeled in the risk assessment. Thus, EPA solicits specific data on the hydraulic conductivity of clay liners associated with CCR disposal units. In addition to the effectiveness of various liner systems, the hydraulic conductivity of coal ash can be reduced with the appropriate addition of moisture followed by compaction to attain 95% of the standard Proctor

[27] Excess cancer risk means risk in addition to pre-existing, "background" risk from other exposures.

[28] Unlined FBC landfills showed less risk as modeled; note that the number of FBC landfills modeled was very small (seven).

[29] EPA's decision to address fugitive dust was based on a peer review comment to the draft Risk Assessment, stakeholder NODA comments, photographic documentation of fugitive dust associated with the hauling and disposal of CCRs, Agency efforts to control fugitive dust emissions from the TVA Kingston spill (see e.g., *http://www.epakingstontva.com/EPA%20Air%20Audits%20and%20Reviews/Kingston%20Fly%20Ash%20-%20EPA%20Audit.pdf*), and OSHA's requirement for MSDS sheets for coal ash.

[30] Non-Groundwater Pathways, Human Health and Ecological Risk Analysis for Fossil Fuel Combustion Phase 2 (FFC2): Draft Final Report (*http://www.epa.gov/osw/nonhaz/industrial/special/fossil/ngwrsk1.pdf*).

[31] All chromium present in the particulate matter was assumed to be in the more toxic, hexavalent form.

maximum dry density value.[32] This concept, it has been reported, could potentially be taken further with the use of compaction coupled with the addition of organosilanes. According to recent studies, organosilanes could take the hydraulic conductivity to zero.[33] EPA solicits comments on the effectiveness of such additives, including any analysis that would reflect long-term performance, as well as the appropriateness of a performance standard that would allow such control measures in lieu of composite liners. EPA has also observed that surface impoundments are often placed right next to surface water bodies which may present complex subsurface environments not considered by the groundwater model, and therefore EPA seeks data on the distance of surface impoundments to water bodies, site specific groundwater risk analysis which accounts for the presence of a nearby surface water body, and groundwater monitoring data associated with such sites.

In characterizing CCRs and utilizing such data for the risk analysis, EPA gathered a variety of data over a long period of time. As a general matter, EPA finds these data to be an accurate characterization, and that the values are in line with recent studies EPA has conducted to characterize new air pollution controls. However, with respect to a few of the highest surface impoundment porewater concentrations (for arsenic in particular), questions have been raised regarding the representativeness of these individual data points. In one case, a facility with the highest arsenic pore water concentration (86.0 mg/L) involved values that were measured in a section of a surface impoundment where coal refuse (defined as coal waste from coal handling, crushing, and sizing operations) was disposed of at the water surface. Pore water samples taken in the coal ash sediment beneath the coal refuse involved concentrations of arsenic as low as 0.003 mg/L. Thus, there is the question of whether those pore water samples measured in the coal refuse represent what leaches out of the bottom of the surface impoundment.

The next highest arsenic values (an average of 5.37 mg/L over 4 samples with the highest concentration being 15.5 mg/L) came from site CASJ (known as SJA in the EPRI report). The concern is that arsenic in the pore water was orders of magnitude higher than in the pond water. That type of change doesn't appear to occur for other constituents in these samples or for arsenic in samples from other surface impoundments. EPA recently attempted to obtain further information that could assist us to better characterize these specific data, but the data are old, the impoundment is no longer in operation, and there are apparently no additional records upon which to draw conclusions.

Additional high concentration values, especially for lead, are associated with ash data provided by Freeman United Mining, which acquired ash for a minefilling project. None of this ash data is associated with electric utilities, but rather with other coal combusters such as John Deere, American Cyanamid, and Washington University in St. Louis, Missouri. The Agency is uncertain whether the high lead levels are associated with lead levels in the source coal, the operations at these facilities, or whether other wastes were mixed with the CCRs.

While these concerns are associated with a small fraction of the data, these data reflect the highest concentrations, and thus can be important considerations in the risk analysis. Based on the above concerns, EPA solicits comment on several questions.

- For the highest concentrations in EPA's database, such as the examples mentioned above, are there values that do not appropriately represent leaching to groundwater, and if so, why not?
- Are there any additional data that are representative of CCR constituents in surface impoundment or landfill leachate (from literature, state files, industry or other sources) that EPA has not identified?
- EPA understands that the disposal practices associated with coal refuse in surface impoundments may have improved based on the development of an industry guide.[34] EPA solicits information on the degree to which coal refuse management practices have changed since the issuance of the guide and the impacts of those changes (*e.g.,* have concentrations of arsenic been reduced in leach samples that have been taken at facilities operating in concert with the industry guide).
- For CCR surface impoundments, are there any examples of pore water concentrations for arsenic increasing orders of magnitude over pond water concentrations?

For more detailed discussions of the CCR risk assessment, *see* the document titled: "What Are the Environmental and Health Effects Associated with Disposing of CCRs in Landfills and Surface Impoundments?" and the report titled "Human and Ecological Risk Assessment of Coal Combustion Wastes" which are included in the docket to this notice.

C. Damage Cases

Under the Bevill Amendment for the "special waste" categories of RCRA, EPA was statutorily required to examine "documented cases in which danger to human health or the environment from surface runoff or leachate has been proved" from the disposal of coal combustion wastes (RCRA Section 8002(n)). The criteria used to determine whether danger to human health and the environment has been proven are described in detail in the May 2000 Regulatory Determination at 65 FR 32224.[35]

At the time of the May 2000 Regulatory Determination, the Agency was aware of 11 documented cases of proven damage to ground water and 36 cases of potential damage to human health and the environment from the improper management of CCRs in landfills and surface impoundments. Additionally, the Agency determined that another four cases were documented cases of ecological damages.[36] However, for the May 2000 Regulatory Determination, EPA did not consider these ecological damage cases because all involved some form of discharge from waste management units to nearby lakes or creeks that would be subject to the Clean Water Act regulations. Moreover, EPA concluded that the threats in those cases were not substantial enough to cause large scale, system level ecological disruptions. On review, EPA has concluded that the ecological damage cases are appropriate for consideration because, while they might involve CWA violations, they nevertheless reflect damages from CCR disposal that might be handled under RCRA controls. And, while they may or may not have involved "systems-level"

[32] The standard and modified Proctor compaction tests (ASTM D 698 and D 1557 respectively) are used to determine the maximum achievable density of soils and aggregates by compacting the soil or aggregate in a standardized mould at a standardized compactive force. The maximum dry density value (or maximum achievable dry density value) is determined by dividing the mass of the compacted material (weight divided by the gravitational force) by the volume of the compacted material.

[33] "Organo-silane Chemistry: A Water Repellant Technology for Coal Ash and Soils," John L. Daniels, Mimi S. Hourani, and Larry S. Harper, 2009 World of Coal Ash Conference. *Available at http://www.flyash.info/2009/025-daniels2009.pdf* and in the docket to this proposal.

[34] Guidance for Comanagement of Mill Rejects at Coal-Fired Power Plants, Electric Power Research Institute, 1999. Available in the docket to this proposal.

[35] For definition of "proven damage case," see section C in the Supplementary Information section.

[36] Ecological damages are damages to mammals, amphibians, fish, benthic layer organisms and plants.

disruption, they were significant enough to lead to state response actions, *e.g.,* fish advisories. EPA now believes that ecological damages warranting state environmental response are generally appropriate for inclusion as damage cases, and to fail to include them would lead to an undercounting of real and recognized damages. Accordingly, at the time of the May 2000 Regulatory Determination, in total, 15 cases of proven damages had occurred. Subsequently, one of the 15 proven damage cases has been reclassified as a potential damage case, resulting in a total of 14 proven cases of damage, as of the May 2000 Regulatory Determination.

Since the May 2000 Regulatory Determination, additional damage cases, including ecological damage cases, have occurred, and were discussed in the August 2007 NODA. Specifically, EPA has gathered or received information on 135 alleged damage cases. Six of the alleged damage cases have been excluded from this analysis because they involved minefills, a management method which is outside the scope of this proposal, while sixty-two of the damage cases have not been further assessed because there was little or no information supporting the concerns identified. Of the remaining 67 damage cases evaluated, EPA determined that 24 were proven cases of damage (which includes the 14 proven damage cases from the May 2000 Regulatory Determination); of the 24 damage cases, eight were determined to be proven damages to surface water and sixteen were determined to be proven damages to ground water, with four of the cases to groundwater being from unlined landfills, five coming from unlined surface impoundments, one was from a surface impoundment where it was unclear whether it was lined, and the remaining six cases coming from unlined sand and gravel pits. Another 43 cases (which includes the 36 potential damage cases from the May 2000 Regulatory Determination) were determined to be potential damages to groundwater or surface water; however, four of the potential damage cases were attributable to oil combustion wastes and thus are outside the scope of this proposal; therefore, resulting in 39 CCR potential damage cases. The remaining 10 alleged damage cases were not considered to be proven or potential damage cases due to a lack of evidence that damages were uniquely associated with CCRs; therefore, they were not considered to be CCR damage cases.

Finally, within the last couple of years, EPA has learned of an additional five cases of claimed damage. Two of the cases involve the structural failure of the surface impoundment; *i.e.,* dam safety and structural integrity issues, a pathway which EPA did not consider at the time of the May 2000 Regulatory Determination. These cases are (1) a 0.5 million cubic yard release of water and fly ash to the Delaware River at the Martin's Creek Power Plant in Pennsylvania in 2005, leading to a response action costing $37 million, and (2) the catastrophic failure of a dike at TVA's Kingston, Tennessee facility, leading to the release of 5.4 million cubic yards of fly ash sludge over an approximately 300 acre area and into a branch of the Emory River, followed by a massive cleanup operation overseen by EPA and the state of Tennessee. EPA classifies these as proven damage cases. Another case involved the failure of a discharge pipe at the TVA Widows Creek plant in Stevenson, Alabama, resulting in a 6.1 million gallon release from an FGD pond, leading to $9.2 million in cleanup costs. EPA did not classify this as a damage case, because samples at relevant points of potential exposure did not exceed applicable standards. Two other cases involved the placement of coal ash in large scale fill operations. The first case, the BBBS Sand and Gravel Quarries in Gambrills, Maryland, involved the disposal of fly ash and bottom ash (beginning in 1995) in two sand and gravel quarries. EPA considers this site a proven damage case, because groundwater samples from residential drinking wells near the site include heavy metals and sulfates at or above groundwater quality standards, and the state of Maryland is overseeing remediation. The second case is the Battlefield Golf Course in Chesapeake, Virginia where 1.5 million yards of fly ash were used as fill and for contouring of a golf course. Groundwater contamination above drinking water levels has been found at the edges and corners of the golf course, but not in residential wells. An EPA study in April 2010 established that residential wells near the site were not impacted by the fly ash and, therefore, EPA does not consider this site a proven damage case. However, due to the onsite groundwater contamination, EPA considers this site to be a potential damage case. Thus, the Agency has classified three of the five new cases as proven damage cases, one as a potential damage case, and the other as not being a damage case (*i.e.,* not meeting the criteria to be considered either a proven or potential damage case). This brings the total number of proven damage cases to 27 and 40 potential cases of damage from the mismanagement of CCRs being disposed.

The Martins Creek and TVA Kingston fly ash impoundment failures underscore the need for surface impoundment integrity requirements. In the case of the Martins Creek failure, 0.5 million cubic yards of fly ash slurry was released into the Delaware River when a dike failed. Fortunately, there are no homes in the path of the release and all the damage was confined to power plant property and the Delaware River. On the other hand, the 5.4 million cubic yards of fly ash sludge released as a result of the TVA Kingston impoundment failure covered an area of approximately 300 acres, flowed into a branch of the Emory River, disrupted power, ruptured a gas line, knocked one home off its foundation and damaged others. Fortunately, there were no injuries.

While much of our risk modeling deals with ground water contamination, based on historical facts, EPA recognizes that failures of large CCR impoundments can lead to catastrophic environmental releases and large cleanup costs. It is critical to understand as well, however, that the structural integrity requirements and the requirements for conversion or retrofitting of existing or new impoundments are designed to avoid such releases and that the benefits of avoiding such catastrophic failures are very significant. As discussed in more detail in Section XII of today's proposal and as fully explained in our Regulatory Impact Analysis (RIA), EPA estimated the benefits of avoiding the future cleanup costs of or impoundment failures. Depending on the regulatory option chosen, the annualized benefits range from $29 million to $1,212 million per year, and the net present value of these ranges from $405 million to $16,732 million. In addition, the RIA did not quantify or monetize several other additional benefits consisting of future avoided social costs associated with ecological and socio-economic damages. These include avoided damages to natural resources, damages to property and physical infrastructure, avoided litigation costs associated with such events, and reduction of toxic chemical-contaminated effluent discharges from impoundments to surface waters.

In December 2009, EPA received a new report from EPRI challenging our conclusions on many of the proven damage cases often noting that there was not significant off-site contamination.

The report, "Evaluation of Coal Combustion Product Damage Cases (Volumes 1 and 2), Draft Report,

November 2009," is available in the docket to this proposal. EPA solicits comments on EPRI's report and welcomes additional data regarding the proven damage cases identified by EPA, especially the degree to which there was off-site contamination.

EPA notes that several stakeholders have very recently identified additional claimed damage cases, and the agency has not had the time to review them closely.[37] Similarly, other stakeholders have recently provided valuable information on CCR risks, costs of different possible options, and characterization data, which EPA has also not had time to review in detail or to respond to. Generally, these reports include information that is relevant to today's proposal. EPA will review this information carefully as we proceed to a final rule, and we encourage commenters on the proposal to consider this material, which EPA has placed in the rulemaking docket, as they prepare comments.

For a more detailed discussion of the damage cases, *see* the Appendix to this notice, the table "Summary of Proven Cases with Damages to Groundwater and to Surface Water" at the end of the Appendix, and the document "Coal Combustion Wastes Damage Case Assessments" available at *http://www.regulations.gov/fdmspublic/component/main?main=DocumentDetail&d=EPA-HQ-RCRA-2006-0796-0015*.

III. Overview and Summary of the Bevill Regulatory Determination and the Proposed Subtitle C and Subtitle D Regulatory Options

In today's notice, EPA is reevaluating its August 1993 and May 2000 Bevill Regulatory Determinations regarding CCRs generated at electric utilities and independent power producers. In the May 2000 determination, EPA concluded that disposal of CCRs did not warrant regulation under RCRA subtitle C as a hazardous waste, but did warrant federal regulation as a solid waste under subtitle D of RCRA. However, EPA never issued federal regulations under subtitle D of RCRA for CCRs. (As noted previously, today's proposal could result in the development of subtitle D standards consistent with the May 2000 Regulatory Determination, or with a revision of the determination, or the issuance of subtitle C standards under RCRA.) Today, EPA is reconsidering this determination, and is soliciting comments on two alternative options: (1) to reverse the Bevill determination (with respect to disposal of CCRs in surface impoundments and landfills), and regulate such CCRs as special wastes under RCRA subtitle C, and (2) to leave the Bevill determination in place and regulate CCRs going to disposal under federal RCRA subtitle D standards. Today's co-proposal provides regulatory text for both options.

In determining whether or not to exclude a Bevill waste from regulation under RCRA subtitle C, EPA must evaluate and weigh eight factors. In section IV. B. of this preamble, EPA discusses CCRs from electric utilities in light of these factors, and we highlight the considerations that might lead us to reversing the August 1993 and May 2000 Regulatory Determinations (and therefore regulate CCR disposal under RCRA subtitle C), or to leave the determination in place (and regulate CCR disposal under RCRA subtitle D).

At the same time, EPA continues to believe the Bevill exclusion should remain in place for CCRs going to certain beneficial uses, because of the important benefits to the environment and the economy from these uses, and because the management scenarios for these products are very different from the risk case being considered for CCR disposal in surface impoundments and landfills. EPA makes it clear that CCRs in sand and gravel pits, quarries, and other large fill operations is not beneficial use, but disposal. As such, it would be regulated under whichever option is finalized. EPA solicits comments, however, on whether unencapsulated uses of CCRs warrant tighter federal control.

A. Summary of Subtitle C Proposal

In combination with its proposal to reverse the Bevill determination for CCRs destined for disposal, EPA is proposing to list as a special waste, CCRs from electric utilities and independent power producers when destined for disposal in a landfill or surface impoundment. These CCRs would be regulated under the RCRA subtitle C rules (as proposed to be amended here) from the point of their generation to the point of their final disposition, which includes both during and after closure of any disposal unit. In addition, EPA is proposing that all existing units that have not closed in accordance with the criteria outlined in this proposal, by the effective date of the final rule, would be subject to all of the requirements of subtitle C, including the permitting requirements at 40 CFR parts 124 and 270. As such, persons who generate, transport and treat, store or dispose of CCRs would be subject to the existing cradle-to-grave subtitle C waste management requirements at 40 CFR parts 260 through 268, parts 270 to 279, and part 124 including the generator and transporter requirements and the requirements for facilities managing CCRs, such as siting, liners (with modification), run-on and run-off controls, groundwater monitoring, fugitive dust controls, financial assurance, corrective action, including facility-wide corrective action, closure of units, and post-closure care (with certain modifications). In addition, facilities that dispose of, treat, or, in many cases, store, CCRs also would be required to obtain permits for the units in which such materials are disposed, treated, and stored. EPA is also considering and seeking comment on a modification, which would not require the closure or installation of composite liners in existing surface impoundments; rather, these surface impoundments could continue to operate for the remainder of their useful life. The rule would also regulate the disposal of CCRs in sand and gravel pits, quarries, and other large fill operations as a landfill.

To address the potential for catastrophic releases from surface impoundments, we also are proposing requirements for dam safety and stability for impoundments that, by the effective date of the final rule, have not closed consistent with the requirements. Finally, we are proposing land disposal restrictions and treatment standards for CCRs, as well as a prohibition on the disposal of treated CCRs below the natural water table.

B. Summary of Subtitle D Proposal

In combination with its proposal to leave the Bevill determination in place, EPA is proposing to regulate CCRs disposed of in surface impoundments or landfills under the RCRA subtitle D requirements, which would establish national criteria to ensure the safe disposal of CCRs in these units. The units would be subject to, among other things, location standards, composite liner requirements (new landfills and surface impoundments would require composite liners; existing surface impoundments without liners would have to retrofit within five years, or cease receiving CCRs and close); groundwater monitoring and corrective action for releases from the unit standards; closure and post-closure care requirements; and requirements to address the stability of surface impoundments. We solicit comments on requiring financial assurance and on

[37] On February 24, the Environmental Integrity Project and EarthJustice issued a report on 31 'new' alleged CCRs damage cases which is available at: *http://www.environmentalintegrity.org/news_reports/documents/OutofControl-MountingDamagesFromCoalAshWasteSites.pdf*.

how the requirements apply to surface impoundments that continue to receive CCRs after the effective date of the rule; specifically, EPA is requesting comment on an alternative under which existing surface impoundments would be allowed to continue to operate without requiring the facility to retrofit the unit to install a composite liner. The rule would also regulate the disposal of CCRs in sand and gravel pits, quarries, and other large fill operations as a landfill. The rule would not regulate the generation, storage or treatment of CCRs prior to disposal. Because of the scope of subtitle D authority, the rule would not require permits, nor could EPA enforce the requirements. Instead, states or citizens could enforce the requirements under RCRA citizen suit authority; the states could also enforce any state regulation under their independent state enforcement authority.

EPA is also considering, and is seeking comment on, a potential modification to the subtitle D option, called "D prime." Under the "D prime" option, existing surface impoundments would not have to close or install composite liners but could continue to operate for their useful life. In the "D prime" option, the other elements of the subtitle D option would remain the same.

IV. Bevill Regulatory Determination Relating to CCRs From Electric Utilities

As discussed in the preceding sections, EPA originally conditioned its May 2000 Regulatory Determination on continued review of, among other factors, "the extent to which [the wastes] have caused damage to human health or the environment; and the adequacy of existing regulation of the wastes." (*See* 65 FR 32218.) Review of the information developed over the past ten years has confirmed EPA's original risk concerns, and has raised significant questions regarding the accuracy of the Agency's predictions regarding anticipated improvements in management and state regulatory oversight of these wastes. Consequently, the Agency has determined that reconsideration of its May 2000 Regulatory Determination is appropriate, and is revaluating whether regulation of CCRs under RCRA subtitle C is necessary in light of the most recent information. The scientific analyses, however, are complex and present legitimate questions for comment and further consideration. Thus, while EPA has concluded that federal regulation of this material is necessary, the Agency has yet not reached a conclusion as to whether the Bevill determination should be revised, or whether regulation under RCRA subtitle C or D is appropriate, but is soliciting comments on the two options described in the previous section.

As stated earlier, EPA's application of its discretion in weighing the eight Bevill factors—and consequently our ultimate decision—will be guided by the following principles. The first is that EPA's actions must be protective of human health and the environment. Second, any decision must be based on sound science. Finally, in conducting this rulemaking, EPA will ensure that its decision processes are transparent, and encourage the greatest degree of public participation. Consequently, to further the public's understanding and ability to comment on the issues facing the Agency, EPA provides an extensive discussion of the technical issues associated with the available information, as well as the policy considerations and the key factors that will weigh in the Agency's ultimate decision.

A. Basis for Reconsideration of May 2000 Regulatory Determination

EPA decided in May 2000 that regulation under RCRA subtitle C was not warranted in light of the trends in present disposal and utilization practices, the current and potential utilization of the wastes, and the concerns expressed against duplication of efforts by other federal and state agencies. In addition, EPA noted that the utility industry has made significant improvements in its waste management practices with respect to new management units over recent years, and most state regulatory programs are similarly improving. In particular, EPA noted that, of the new units constructed between 1985 and 1995, 60% of the new surface impoundments were lined and 65% had groundwater monitoring. Further, the risk information available was limited, although we also noted that we expected that the limited number of damage cases identified in the Regulatory Determination was an underestimate. However, EPA did not conclude that the available information regarding the extent or nature of the risks were equivocal. However, the Agency noted that "* * * we identified a potential for risks from arsenic that we cannot dismiss * * *."[38] EPA further noted that "[i]n the absence of a more complete groundwater risk assessment, we are unable at this time to draw quantitative conclusions regarding the risks due to arsenic or other contaminants posed by improper waste management." Existing older units that lacked liners and groundwater monitoring (for surface impoundments, only 26% of all units had liners and only 38% of all units had groundwater monitoring) were the major risk drivers in the study.

As discussed in greater detail in section II.B, EPA has revised the draft quantitative risk assessment made available when it solicited public comment on the 1999 Report to Congress to account for the concerns raised by the public during the public comment period. The results of these risk analyses show that certain management practices—the disposal of both wet and dry CCRs in unlined waste management units, but particularly in unlined surface impoundments, and the prevalence of wet handling, can pose significant risks to human health and the environment from releases of CCR toxic constituents to ground water and surface water. The Agency has estimated that there are approximately 300 CCR landfills and 584 CCR surface impoundments or similar management units in use at roughly 495 coal-fired power plants. (Data also indicate that a small number of utilities dispose of CCRs off-site, typically near the generating utility.) Many of these units—particularly surface impoundments—lack liners and groundwater monitoring systems. EPA's revised CCR risk assessment[39] estimated the cancer risk from arsenic[40] that leaches into groundwater from CCRs managed in units without composite liners to exceed EPA's typical risk thresholds of 10^{-4} to 10^{-6}. For example, depending on various assumptions about disposal practices (*e.g.,* whether CCRs are co-disposed with coal refuse), groundwater interception and arsenic speciation, the 90th percentile risks from unlined surface impoundments ranged from 2×10^{-2} to 1×10^{-4}. The risks from clay-lined surface impoundments ranged from 7×10^{3} to 4×10^{-5}. Similarly, estimated risks from unlined landfills ranged between 5×10^{-4} to 3×10^{-6}, and

[38] *See* 65 FR 32216 at *http://www.epa.gov/epawaste/nonhaz/industrial/special/fossil/ff2f-fr.pdf.*

[39] "Human and Ecological Risk Assessment of Coal Combustion Wastes," (April 2010).

[40] The risk estimates for arsenic presented in the revised risk assessment are based on the existing cancer slope factor of 1.5 mg/kg/d^{-1} in EPA's Integrated Risk Information System (IRIS). However, EPA is currently evaluating the arsenic cancer slope factor and it is likely to increase. In addition, the National Resources Council (NRC) of the National Academy of Sciences (NAS) made new recommendations regarding new toxicity information in the NRC document, "Arsenic in Drinking Water, 2001 Update." Using this NRC data analysis, EPA calculated a new cancer slope factor of 26 mg/kg/d^{-1} which would increase the individual risk estimates by about 17 times.

from 2×10^{-4} to 5×10^{-9} for clay-lined landfills. EPA's risk assessment also estimated HQs above 1 for other metals, including selenium and lead in unlined and clay-lined units. EPA also notes in this regard that recent research indicates that traditional leach procedures (*e.g.,* TCLP and SPLP) may underestimate the actual leach rates of toxic constituents from CCRs under different field conditions.

Recent events also have demonstrated that, if not properly controlled, these wastes have caused greater damage to human health and the environment than EPA originally estimated in its risk assessments. On December 22, 2008, a failure of the northeastern dike used to contain fly ash occurred at the dewatering area of the TVA's Kingston Fossil Plant in Harriman, Tennessee. Subsequently, approximately 5.4 million cubic yards of fly ash sludge was released over an approximately 300 acre area. The ash slide disrupted power, ruptured a gas line, knocked one home off its foundation and damaged others. A root-cause analysis report developed for TVA, accessible at *http://www.tva.gov/kingston/rca/index.htm,* established that the dike failed because it was expanded by successive vertical additions, to a point where a thin, weak layer of fly ash ('slime') on which it had been founded, failed by sliding. The direct costs to clean up the damage from the TVA Kingston incident are well into the billions, and is currently estimated to exceed $1.2 billion.[41]

Although the TVA spill was the largest, it was not the only damage case to involve impoundment stability. A smaller, but still significant incident occurred in August 2005, when a gate in a dam confining a 40-acre CCR surface impoundment in eastern Pennsylvania failed. The dam failure, a violation of the facility's state-issued solid waste disposal permit and Section 402 of the Clean Water Act, resulted in the discharge of 0.5 million cubic yards of coal-ash and contaminated water into the Oughoughton Creek and the Delaware River.

Moreover, documented cases of the type of damage that EPA originally identified to result from improper management of CCR have continued to occur, leading EPA to question whether the risks that EPA originally identified have been sufficiently mitigated since our May 2000 Regulatory Determination. As discussed in more detail below, and in materials contained in the docket, there is a growing record of proven damage cases to groundwater and surface water, as well as a large number of potential damage cases. Since the May 2000 Regulatory Determination, EPA has documented an additional 13 proven damage cases and 4 potential damage cases.

Further, recently collected information regarding the existing state regulatory programs[42] calls into question whether those programs, in the absence of national minimum standards, have sufficiently improved to address the gaps that EPA had identified in its May 2000 Regulatory Determination such that EPA can continue to conclude that in the absence of federal oversight, the management of these wastes will be adequate to protect human health and the environment. Many state regulatory programs for the management of CCRs, including requirements for liners and groundwater monitoring, are lacking, and while industry practices may be improving, EPA continues to *see* cases of inappropriate management or cases in which key protections (*e.g.,* groundwater monitoring at existing units) are absent. Although the joint DOE and EPA study entitled, Coal Combustion Waste Management at Landfills and Surface Impoundments, 1994–2004, indicates that most new units appear to be better designed, in that they are lined and have installed groundwater monitoring systems, and therefore the total percentages of unprotected units have decreased, it appears that a large amount of waste is still being disposed into units that lack the necessary protections of liners, and groundwater monitoring. Furthermore, while corrective action has generally been taken at the proven damage cases, the RCRA regulatory program is designed to prevent contamination in the first place, if at all practicable, rather than one in which contamination is simply remedied after discovery.[43] This information also highlights that EPA still lacks details regarding the manner and degree to which states are regulating the management of this material. All of these factors emphasize the need for prompt federal rulemaking and have led EPA to reconsider its May 2000 Regulatory Determination.

In sum, as a result of the significant new information accumulated on two of the four considerations specifically identified in the May 2000 Regulatory Determination (65 FR 32218), the Agency has determined that reevaluation of its original conclusions in light of all of the RCRA Section 8002(n) study factors is necessary. Based on its consideration of these statutory factors, EPA has not yet reached a decision on whether to revise the Bevill Regulatory Determination. Rather, EPA has summarized the information available for each of the factors, and identifies those considerations on which EPA believes that critical information is lacking. Accordingly, EPA is soliciting further information and public input on each of these considerations that will factor into the Agency's determination as to whether regulation under RCRA subtitle C or D is warranted.

As stated previously and as fully explained in Section XII of today's proposal and in our Regulatory Impact Analysis, our proposed requirements for surface impoundment structural stability and conversion or retrofitting of units, will have substantial benefits in avoided future clean up costs.

B. RCRA Section 8002(n) Study Factors

Section 8002(n) of RCRA requires the Administrator to conduct a detailed and comprehensive study and submit a report on the adverse effects on human health and the environment, if any, of the disposal and utilization of fly ash waste, bottom ash waste, slag waste, flue gas emission control waste, and other by-product materials generated primarily from the combustion of coal or other fossil fuels. The study was to include an analysis of the eight factors required under section 8002(n) of RCRA. EPA addressed these study factors in the 1988 and 1999 Reports to

[41] $3.0 billion is EPA's "social cost" estimate assigned in the April 2010 RIA to the December 2008 TVA Kingston, TN impoundment release event. Social cost represents the opportunity costs incurred by society, not just the monetary costs for cleanup. OMB's 2003 "Circular A–4: Regulatory Analysis" (page 18) instructs Federal agencies to estimate "opportunity costs" for purpose of valuing benefits and costs in RIAs. This $3.0 billion social cost estimate is larger than TVA's $933 million to $1.2 billion cleanup cost estimate (i.e., TVA's estimate as of 03 Feb 2010), because EPA's social cost estimate consists of three other social cost elements in addition to TVA's cleanup cost estimate: (a) TVA cleanup cost, (b) response, oversight and ancillary costs associated with local, state, and other Federal agencies, (c) ecological damages, and (d) local (community) socio-economic damages. Appendix Q to the April 2010 RIA provides EPA's documentation and calculation of these four cost elements, which total $3.0 billion in social cost.

[42] ASTSWMO Survey Conducted Feb.—Mar. 2009 (Excel spreadsheet) available in the docket for this proposal.

[43] As noted in Appendix I on Damage Cases, of the 16 proven cases of damages to groundwater, the Agency has been able to confirm that corrective actions have been completed in seven cases and are ongoing in the remaining nine cases. Corrective action measures at these CCR management units vary depending on site specific circumstances and include formal closure of the unit, capping, re-grading of ash and the installation of liners over the ash, groundwater treatment, ground-water monitoring, installation of a barrier wall, and combinations of these measures.

Congress. The findings of these two Reports to Congress were the basis for our decisions in the August 1993 and the May 2000 Regulatory Determinations to maintain the Bevill exemption for CCRs. In considering whether to retain or to reverse the August 1993 and May 2000 Regulatory Determinations regarding the Bevill exemption of CCRs destined for disposal, we have reexamined the RCRA section 8002(n) study factors against the data on which we made the May 2000 Regulatory Determination, as well as the most recent data we have available.

1. Source and volumes of CCR generated per year: In the mid-1990s, according to various sources, between 62 and 71 million tons of CCRs were generated by coal-fired electric power plants.[44] In comparison, much larger volumes are being generated now (primarily due to the increase in coal-fired power plants), with 136 million tons of CCRs generated by coal-fired electric power plants in 2008.[45]

2. Present disposal and utilization practices: In 2008, 34% (46 million tons) of CCRs were landfilled, 22% (29.4 million tons) were disposed into surface impoundments,[46] nearly 37% (50.1 million tons) were beneficially used (excluding minefill operations), and nearly 8% (10.5 million tons) were placed in mines. This compares to approximately 23% (26.2 million tons) landfilled, 46% (53.2 million tons) disposed of into surface impoundments, 23% beneficially used (excluding minefill operations), and 8% (9 million tons) placed in mines in 1995. Thus, while the overall volume of CCRs going to disposal in surface impoundments and landfills has remained relatively constant, the total volume going to surface impoundments has decreased, and the total volume going to landfills has increased.

The Agency has estimated that there are approximately 300 CCR landfills and 584 CCR surface impoundments or similar management units in use at roughly 495 coal-fired power plants. The age of the disposal units varies considerably. For example, while there are new surface impoundments, 75% are greater than 25 years old, with 10% being greater than 50 years old. Similarly, information from an EPRI survey used in the 1999 Report to Congress indicates that the average planned life expectancy of a landfill is approximately 31 years, with about 12% having planned life expectancy over 50 years (with one planning for over 100 years). Many of these units—particularly surface impoundments, lack liners and ground water monitoring systems. EPA has estimated that in 2004, 31% of the CCR landfills and 62% of the CCR surface impoundments lacked liners, and 10% of the CCR landfills and 58% of the CCR surface impoundments lacked groundwater monitoring.[47] In the mid-1990s, there were approximately 275 CCR landfills and 286 CCR surface impoundments in use.[48] EPA does not believe the increased number of surface impoundments identified in today's rule reflects an actual change of practice, but rather more stringent definitions, as well as possibly, the greater availability of more accurate information. For example, much of the increase in surface impoundments likely results from counting units that receive wastewater that has been in contact with even small amounts of coal ash, and thus includes many units which were not included in EPA's mid-1990 estimates.

a. *Existing State Regulatory Oversight.* The results of the joint DOE and EPA study entitled, Coal Combustion Waste Management at Landfills and Surface Impoundments, 1994–2004 indicates that of the states evaluated in this report, state regulations have generally improved since 2000. In addition, it would appear that the industry itself is changing and improving its management practices. For example, all new surface impoundments and nearly all new landfills (97%) identified in the survey that were constructed between 1994 and 2004 were constructed with liners. Regarding the prevalence of groundwater monitoring at new units, the joint DOE/EPA study suggests that nearly all new landfills (98%) and most new surface impoundments (81%) constructed between 1994 and 2004 were constructed with groundwater monitoring systems. Moreover, the frequency of dry handling in landfills appears to have increased; approximately two-thirds of the new units are landfills, while the remaining one-third are surface impoundments. The number of new units from 1994 to 2004 was 56. Assuming that replacement continued at a rate of 5.6 per year since 2004, we would have an additional 34 new units, but it would still be decades at this rate to replace the large collection of older units.

The DOE/EPA study also identifies significant gaps that remain under existing state regulation. For example, only 19% (3 out of 19) of the surveyed surface impoundment unit permits included requirements addressing groundwater protection standards (*i.e.,* contaminant concentrations that cannot be exceeded) or closure/post-closure care, and only 12% (2 out of 12) of surveyed units were required to obtain bonding or financial assurance. The EPA/DOE report also concluded that approximately 30 percent of the net disposable CCRs generated is potentially entirely exempt from the state solid waste permitting requirements[49] (EPA/DOE Report at pages 45–46). For example, Alabama does not currently regulate CCR disposal under any state waste authority and does not currently have a dam safety program (although the state has an initiative to develop one). Texas (the largest coal ash producer) does not require permits for waste managed on-site.[50] Tennessee currently does not regulate surface impoundments under its waste authority, but is now reconsidering this, in light of the TVA spill. Finally, a number of states only regulate surface impoundments under Clean Water Act authorities, and consequently primarily address the risks from effluent discharges to navigable waters, but do not require liners or groundwater monitoring.

The Agency recognizes that these statistics may be difficult to interpret due to the limitations of the study. The study focused on only eleven states, which account for approximately half the CCRs generated in the U.S., and it may not address all of the existing regulatory requirements that states may or could impose through other authorities to control these units. As one example, the DOE/EPA report notes that four of the six states that do not require solid waste permits rely on other state authorities to regulate these units: "In

[44] Cited in "Technical Background Document for the Report to Congress on Remaining Wastes from Fossil Fuel Combustion: Industry Statistics and Waste Management Practices," March 1999.

[45] ACAA (American Coal Ash Association). 2009. *2008 Coal Combustion Product (CCP) Production & Use Survey Report. http://acaa.affiniscape.com/associations/8003/files/2008_ACAA_CCP_Survey_Report_FINAL_100509.*

[46] Estimated from the 2009 ACAA survey and Energy Information Administration 2005 F767 Power Plant database.

[47] Estimated from the 1995 data reported in the May 2000 Regulatory Determination and the data for new units from 1994 to 2004 reported in the 2006 DOE/EPA report "*Coal Combustion Waste Management at Landfills and Surface Impoundments, 1994–2004.*"

[48] Technical Background Document, Ibid.

[49] 38.7 million tons of out of 129 million tons generated CCRs (Based on DOE/EIA 2004 data).

[50] In Texas, on-site means the same or geographically contiguous property which may be divided by public or private rights-of-way, provided the entrance and exit between the properties is at a cross-roads intersection, and access is by crossing, as opposed to going along, the right-of-way. Noncontiguous properties owned by the same person but connected by a right-of-way which he controls and to which the public does not have access, is also considered on-site property. (Title 30 TAC 335.1)

Florida, if CCWs are disposed in an on-site landfill at a coal-fired electric generating plant authorized under the Florida Power Plant Siting Act (PPSA), no separate permits, including solid waste construction and operation permits, are required. Instead, the entire facility is covered under the PPSA certification, which will contain the same substantive requirements as would otherwise have been imposed by other permits." (EPA/DOE Report at page 46). The DOE/EPA report identified whether states tightened, relaxed, or were neutral with regard to program changes. From the time of the 1999 Report to Congress to 2005, most all programs were neutral, with a couple of programs tightening requirements and none relaxing requirements. Going back to the period of the 1988 Report to Congress to 2005, two states (Alabama and Florida) are reported to have relaxed portions of their standards, while not tightening any other portions of their program. Part of the difficulty in interpreting this information stems from the fact that the survey responses contained little or no details of the state requirements; rather, the responses merely indicated (by checking a box) whether states imposed some sort of requirement relating to the issue. Consequently, the Agency lacks detailed information on the content of the requirements, and whether, for example, performance based requirements or other state programs are used to address the risks from these units. EPA also received detailed comments on this report authored by several environmental groups, who criticized several of the general conclusions. These comments are included in the rule docket (*see* comment attachment submitted by Marty Rustan on behalf of Lisa Evans, Attorney, Earthjustice; EPA–HQ–RCRA–2006–0796–0446.5).

A more recent survey conducted by the Association of State and Territorial Solid Waste Management Officials (ASTSWMO) seems to support the view that the states still have not yet adequately implemented regulatory programs over CCR management units, although like the DOE/EPA study, it lacks details on the substance of the state requirements. According to a 2009 ASTSWMO survey of states with coal ash generation [51] (available in the docket), of the 42 states with coal fired utilities, at least 36 have permit programs for landfills used to manage CCRs, and of the 36 states that have CCR surface impoundments, 25 have permit programs. Permitting is particularly important to provide oversight and to approve implementation plans such as the placement of groundwater monitoring wells. Without a state permit program, regulatory flexibility is limited, and certification by an independent registered professional engineer is necessary. With regard to liner requirements, 36% (15 of the 42 states that responded to this question) do not have minimum [52] liner requirements for CCR landfills, while 67% (24 of the 36 states that responded to this question) do not have CCR liner requirements for surface impoundments. Similarly, 19% (8 of the 42 states that responded to this question) do not have minimum groundwater monitoring requirements for landfills and 61% (22 of the 36 states that responded to this question) do not have groundwater monitoring requirements for surface impoundments.[53] These findings are particularly significant as groundwater monitoring for these kinds of units is a minimum for any credible regulatory regime. The 2009 ASTSWMO survey also indicates that only 36 percent of the states regulate the structural stability of surface impoundments, and only 31 percent of the states require financial assurance for surface impoundments. Because structural stability of surface impoundments is largely regulated by state dam safety programs which are separate from state solid waste programs, EPA recognizes that information from the dam safety programs would be a much more meaningful measure of state regulation of the structural stability of surface impoundments, and solicits such information.

Thus, while the states seem to be regulating landfills to a greater extent, given the significant risks associated with surface impoundments, these results suggest that there continue to be significant gaps in state regulatory programs for the disposal of CCRs. (*See* Letter from ASTSWMO to Matt Hale dated April 1, 2009, a copy of which is in the docket to today's proposed rule for complete results of the survey.)

EPA is also aware of some additional information from ASTSWMO. There are 15 states (Colorado, Florida, Indiana, Iowa, Kansas, Kentucky, Maryland, Minnesota, Mississippi, Montana, New York, North Carolina, Ohio, Pennsylvania, and Virginia) that were considering changes to their CCR regulations at the time of the ASTSWMO survey (February 2009). In late November 2009, ASTSWMO also identified 15 states (Arizona, Delaware, Georgia, Idaho, Iowa, Kansas, Louisiana, Maryland, Mississippi, North Dakota, South Carolina, Tennessee, Washington, Wisconsin, and West Virginia) that had revised their CCR requirements since 2000. Finally, ASTSWMO identified 8 states (Georgia, Illinois, Indiana, Iowa, Montana, Ohio, Pennsylvania, and South Carolina) which are requiring groundwater monitoring at existing facilities that previously did not have groundwater monitoring.

Several issues complicate this assessment, however. As noted previously, EPA lacks any real details regarding how states, in practice, oversee the management of these materials when treated as wastes. For example, some states may use performance based standards or implement requirements to control CCR landfills and surface impoundments under other state programs. Also, most of the new data primarily focuses on the requirements applicable to *new* management units, which represent approximately 10% of the disposal units. EPA has little, if any information, that describes the extent to which states and utilities have implemented requirements—such as groundwater monitoring, for existing units, for the many landfills and surface impoundments that receive CCRs. The information currently in the record with respect to existing units is fifteen years old. EPA expects that it would be unlikely that states would have required existing units to install liners, states would have been more likely to have imposed groundwater monitoring for such units over the last 15 years. Finally, as discussed in the next section, the fact that many of the surface impoundments are located adjacent to water bodies—which is not accounted for in EPA's groundwater risk assessment—may affect our assessment of the extent of the liner and groundwater monitoring requirements that would be necessary. Therefore, EPA solicits detailed comments specifically on the current management practices of state programs, not only under state waste authorities, but under other authorities as well. The adequacy of state regulation is one of the key issues before the Agency, as it will address some of the more significant questions remaining regarding the extent of the

[51] ASTSWMO Survey Conducted Feb.–Mar. 2009 (Excel spreadsheet).

[52] For both landfills and surface impoundments, most of the states that responded to questions addressing their liner and groundwater monitoring program provisions had less stringent requirements, *e.g.,* allowing variance, exemption, or a case-by-case evaluation. In the absence of state-specific information, we are unable to translate these statistics into a concrete number of affected waste units.

[53] Additionally, the July 2009 Petition pointed out deficiencies in state regulatory programs.

risks presented by the disposal of CCRs. Accordingly, the Agency specifically solicits information, whether from state regulatory authorities or from members of the public, regarding details on the entire state regulatory structure, including the specific requirements that states have in place to regulate CCRs, and to provide oversight of these units. EPA would also welcome more detailed information regarding the states' historic practice in implementing its existing requirements, including for example, the states' record of enforcement and its practice in providing for public participation in the development and implementation of any existing permitting requirements. EPA is particularly interested in information on the extent to which states have implemented requirements applicable to the older, existing units, which represent the majority of the units into which CCRs are currently disposed (approximately 90%). EPA also requests information on the extent to which EPA's current information adequately reflects changes in industry practices, adopted independent of state requirements.

b. *Beneficial Use.* In the May 2000 Regulatory Determination, EPA stated: "The Agency has concluded that no additional regulations are warranted for coal combustion wastes that are used beneficially (other than for minefilling) and for oil and gas combustion wastes. We do not wish to place any unnecessary barriers on the beneficial use of fossil fuel combustion wastes so that they can be used in applications that conserve natural resources and reduce disposal costs." (65 FR 32214) (*See* separate discussion regarding minefilling in section IV. E of this preamble.) EPA identified specific beneficial uses as covered by the May 2000 determination. In particular, EPA stated that: "Beneficial purposes include waste stabilization, beneficial construction applications (*e.g.,* cement, concrete, brick and concrete products, road bed, structural fill, blasting grit, wall board, insulation, roofing materials), agricultural applications (*e.g.,* as a substitute for lime) and other applications (absorbents, filter media, paints, plastics and metals manufacture, snow and ice control, waste stabilization)." (*See* 65 FR 32229) These beneficial uses are described in more detail in EPA's Report to Congress on Wastes from the Combustion of Fossil Fuels in March 1999 (*see* Volume 2, Section 3.3.5).

Since EPA's Regulatory Determination in May 2000, there has been a significant increase in the use of CCRs and the development of established commercial sectors that utilize and depend on the beneficial use of CCRs. Additional uses have been identified; for example, the use of CCRs as ingredients in specific products, such as resin-bound products or mineral filler in asphalt. New applications of CCRs have been developed, which may hold great green house gas (GHG) benefits (for example, fly ash bricks and a process to use CO_2 emissions to produce cement). Further, EPA expects that uses could shift in the future because the composition and characteristics of CCRs are likely to change due to the addition of new air pollution controls at coal-fired utilities. (*See* section IV. D. below for a more detailed discussion on the beneficial use of CCRs.)

3. Potential danger, if any, to human health and the environment from the disposal and reuse of CCRs:

a. *From Disposal.* The contaminants of concern in CCRs include antimony, arsenic, barium, beryllium, cadmium, chromium, lead, mercury, nickel, selenium, silver and thallium. Potential human exposure pathways for these contaminants from the disposal of CCRs are ground water ingestion, inhalation, and the consumption of fish exposed to contaminants. Ecological impacts include surface water contamination, contamination of wetlands, and aquatic life exposure to contaminants of concern. As discussed in section II. B, V., and the Regulatory Impact Analysis, the risks modeled for the 2010 risk assessment often exceeded EPA's typical regulatory levels of concern. With very few exceptions, the risks modeled for the 2010 risk assessment correspond with ground water exceedances of constituents observed in EPA's damage case assessments (*e.g.,* arsenic, boron, cadmium, lead, molybdenum, and selenium were modeled and found to exceed the risk criteria in at least some instances, and were also found in at least some of the damage cases). Additionally, as discussed in section I.F.2, the potential exists for the chemical characteristics of certain CCRs (*e.g.,* fly ash and FGD) to increase, which could result in increases in releases from management units, particularly if such wastes are placed in old unlined units, as a result of the increased use and application of advanced air pollution control technologies in coal-fired power plants. Further details on the results of EPA's quantitative groundwater risk assessment, and the technical issues that remain to be addressed, and on the unquantified human and ecological risks can be found in section II and in the Regulatory Impact Analysis for today's proposal.

EPA also conducted a population risk assessment for the groundwater-arsenic pathway, as a complement to the individual risk analysis. While the RCRA program necessarily focuses on individual risks, and individual risks have been the basis of previous Bevill and hazardous waste determinations, the population risk estimate provides perspective, and was used to develop the Agency's cost benefit analyses of different regulatory approaches (discussed in section XII.A of this preamble). In this analysis, EPA calculated a best estimate that current risks from arsenic via the groundwater used as drinking water pathway are 2,509 total excess cancers, over a 75-year period.[54] (A 75-year period was used in this analysis to capture peak risk while the RIA generally covers 50 years.) These estimates are based on a cancer slope factor which represents the most recent science derived from a 2001 National Resources Council review of arsenic toxicity. It should be noted that the analysis did not include risks from other pathways or constituents, as explained in section 5A of the Regulatory Impact Analysis for this proposal.

Of the approximately 584 surface impoundments currently operating in the United States, a certain percentage of these have a great potential for loss of human life and environmental damage in the event of catastrophic failure. Based on the information collected from EPA's recent CERCLA 104(e) information request letters 109 impoundments have either a high or significant hazard potential rating,[55] thirteen of which were not designed by a professional engineer. Of the total universe of surface impoundments, approximately 186 of these units were not designed by a professional engineer. Surface impoundments are generally designed to last the typical operating life of coal-fired boilers, on the order of 40 years. However, many impoundments are aging: 56 units are older than 50 years, 96 are older than 40 years, and 340 are between 26 and 40 years old. In recent years, problems have continued to arise from these units, which appear to be related to the aging infrastructure, and the fact that many units may be nearing the end of

[54] Chapter 5, Page 121 of the Regulatory Impact Analysis for this proposal.

[55] 429 of these impoundments currently have no rating. Thus, the Agency expects the number of surface impoundments with a high or significant hazard rating may increase as additional impoundments are assigned ratings. See the definitions in the Summary section of this notice for the definitions of high and significant hazard potential.

their useful lives. For example, as a result of the administrative consent order issued after the December 2008 spill, TVA conducted testing which showed that another dike at TVA's Kingston, Tennessee plant had significant safety deficiencies. Further, in response to EPA's CERCLA 104(e) information request letter, a total of 35 units at 25 facilities reported historical releases. These range from minor spills to a spill of 0.5 million cubic yards of water and fly ash. Additional details regarding these releases can be found in the docket for this rulemaking. EPA continues its assessments of CCR surface impoundments. The most recent information on these can be found on EPA's internet site at *http://www.epa.gov/epawaste/nonhaz/industrial/special/fossil/surveys2/index.htm#surveyresults*.

b. *From Beneficial Use.* The risks associated with the disposal of CCRs stem from the specific nature of that activity and the specific risks it involves; that is, the disposal of CCRs in (often unlined) landfills or surface impoundments, with hundreds of thousands, if not millions, of tons placed in a single concentrated location. And in the case of surface impoundments, the CCRs are managed with water, under a hydraulic head, which promotes more rapid leaching of contaminants into neighboring groundwater than do landfills. The beneficial uses identified as excluded under the Bevill amendment for the most part present a significantly different picture, and a significantly different risk profile.

In 1999 EPA conducted a risk assessment of certain agricultural uses of CCRs,[56] since the use of CCRs in this manner was considered the most likely to raise concerns from a human health and environmental point of view. EPA's risk assessment estimated the risks associated with such uses to be within the range of 1×10^{-6}. The results of the risk assessment, as well as EPA's belief that the use of CCRs in agricultural settings was the most likely use to raise concerns, resulted in EPA concluding that none of the identified beneficial uses warranted federal regulation, because "we were not able to identify damage cases associated with these types of beneficial uses, nor do we now believe that these uses of coal combustion wastes present a significant risk to human health or the environment." (65 FR 32230, May 22, 2000.) EPA also cited the importance of beneficially using secondary materials and of resource conservation, as an alternative to disposal.

To date, EPA has still seen no evidence of damages from the beneficial uses of CCRs that EPA identified in its original Regulatory Determination. For example, there is wide acceptance of the use of CCRs in encapsulated uses, such as wallboard, concrete, and bricks because the CCRs are bound into products. The Agency believes that such beneficial uses of CCRs offer significant environmental benefits.

As we discuss in other sections of this preamble, there are situations where large quantities of CCRs have been used indiscriminately as unencapsulated, general fill. The Agency does not consider this a beneficial use under today's proposal, but rather considers it waste management.

Environmental Benefits

The beneficial use of CCRs offers significant environmental benefits, including greenhouse gas (GHG) reduction, energy conservation, reduction in land disposal (*i.e.,* avoidance of potential CCR disposal impacts), and reduction in the need to mine and process virgin materials and the associated environmental impacts. Specifically:

Greenhouse Gas and Energy Benefits. The beneficial use of CCRs reduces energy consumption and GHG emissions in a number of ways. One of the most widely recognized beneficial applications of CCRs is the use of coal fly ash as a substitute for Portland cement in the manufacture of concrete. Reducing the amount of cement produced by beneficially using fly ash as a substitute for cement leads to large supply chain-wide reductions in energy use and GHG emissions.[57] For example, fly ash typically replaces between 15 and 30 percent of the cement in concrete, although the percentages can and have been higher. However, assuming a 15 to 30 percent fly ash to cement replacement rate, and considering the approximate amount of cement that is produced each year, would result in a reduction of GHG emissions by approximately 12.5 to 25 million tons of CO_2 equivalent and a reduction in oil consumption by 26.8 to 53.6 million barrels of oil.[58] This estimate is likely to underestimate the total benefits that can be achieved. As an added benefit, the use of fly ash generally makes concrete stronger and more durable. This results in a longer lasting material, thereby marginally reducing the need for future cement manufacturing and corresponding avoided emissions and energy use.

Benefits From Reducing the Need To Mine and Process Virgin Materials. CCRs can be substituted for many virgin materials that would otherwise have to be mined and processed for use. These virgin materials include limestone to make cement, and Portland cement to make concrete; mined gypsum to make wallboard, and aggregate, such as stone and gravel for uses in concrete and road bed. Using virgin materials for these applications requires mining and processing them, which can impair wildlife habitats and disturb otherwise undeveloped land. It is beneficial to use secondary materials—provided it is done in an environmentally sound manner—that would otherwise be disposed of, rather than to mine and process virgin materials, while simultaneously reducing waste and environmental footprints. Reducing mining, processing and transport of virgin materials also conserves energy, avoids GHG emissions, and reduces impacts on communities.

Benefits From Reducing the Disposal of CCRs. Beneficially using CCRs instead of disposing of them in landfills and surface impoundments also reduces the need for additional landfill space and any risks associated with their disposal. In particular, the U.S. disposed of over 75 million tons of CCRs in landfills and surface impoundments in 2008, which is equivalent to the space required of 26,240 quarter-acre home sites under 8 feet of CCRs.

While the Agency recognizes the need for regulations for the management of CCRs in landfills and surface impoundments, we strongly support the beneficial use of CCRs in an environmentally sound manner because of the significant environmental benefits that accrue both locally and globally. As discussed below in section XII.A, the current beneficial use of CCRs as a replacement for industrial raw materials (*e.g.,* Portland cement, virgin stone aggregate, lime, gypsum) provides substantial annual life cycle environmental benefits for these industrial applications. Specifically,

[56] 1998 Draft Final Report; Non-groundwater Pathways, Human Health and Ecological Risk Analysis for Fossil Fuel Combustion Phase 2 (FFC2) and its appendices (A through J); available at *http://www.epa.gov/osw/nonhaz/industrial/special/fossil/fsltech.htm.*

[57] Waste and Materials-Flow Benchmark Sector Report: Beneficial Use of Secondary Materials—Coal Combustion Products, February 12, 2008.

[58] Avoided GHG and energy saving estimates based on energy and environmental benefits estimates in the EPA report entitled, "Study on Increasing the Usage of Recovered Mineral Components in Federally Funded Projects Involving Procurement of Cement or Concrete" available at *http://www.epa.gov/osw/conserve/tools/epg/pdf/rtc/report4-08.pdf.*

beneficially using CCRs as a substitute for industrial raw materials contributes (a) $4.89 billion per year in energy savings, (b) $0.081 billion per year in water savings, (c) $0.239 billion per year in GHG [59] (*i.e.,* carbon dioxide and methane) emissions reduction, and (d) $17.8 billion per year in other air pollution reduction. In addition, these applications also result in annual material and disposal cost savings of approximately $2.93 billion. All together, the beneficial use of CCRs provides $25.9 billion in annual national economic and environmental benefits (relative to 2005 tonnage).[60]

However, as discussed in the next section, there are cases where large quantities of CCRs have been "used" indiscriminately as unencapsulated "fill," *e.g.,* to fill sand and gravel pits or quarries, or as general fill (*e.g.,* Pines, Indiana and the Battlefield Golf Course in Chesapeake, Virginia [61]). Although EPA does not consider these practices to be legitimate beneficial uses, others classify them as such. In any case, EPA has concluded that these practices raise significant environmental concerns.

4. Documented cases in which danger to human health or the environment from surface runoff or leachate has been proved: As described previously, EPA has identified 27 proven damage cases: 17 cases of damage to groundwater, and ten cases of damage to surface water, seven of which are ecological damage cases. Sixteen of the 17 proven damage cases to groundwater involved disposal in unlined units—for the one additional unit, it is unknown whether there was a liner. We have also identified 40 potential damage cases to groundwater and surface water. These numbers compare to 14 proven damage cases and 36 potential cases of damage when the Agency announced its Regulatory Determination in May 2000. The Agency believes that these numbers likely underestimate the number of proven and potential damage cases and that it is likely that additional cases of damage would be found if a more comprehensive evaluation was conducted, particularly since much of this waste has been (and continues to be) managed in unlined disposal units.

Several of the new damage cases involve activities that differ from prior damage cases, which were focused on groundwater contamination from landfills and surface impoundments. These new cases present additional risk concerns that EPA did not evaluate in the May 2000 Regulatory Determination. Specifically, some of the recent proven damage cases involved the catastrophic release due to the structural failure of CCR surface impoundments, such as the dam failures that occurred in Martins Creek, Pennsylvania and Kingston, Tennessee.

In addition, a number of proven damage cases involve the large-scale placement, akin to disposal, of CCRs, under the guise of "beneficial use." The "beneficial use" in these cases involved the filling of old, unlined quarries or gravel pits, or the regrading of landscape with large quantities of CCRs. For example, the 216-acre Battlefield Golf Course was contoured with 1.5 million yards of fly ash to develop the golf course. In late 2008, groundwater and surface water sampling was conducted. There were exceedances of primary drinking water standards in on-site groundwater for contaminants typically found in fly ash. In addition, there were exceedances of secondary drinking water standards in both on-site and off-site groundwater (in nine residential wells); however, the natural levels of both manganese and iron in the area's shallow aquifer are very high (0.14 mg/L to 0.24.mg/L and 5.0 mg/L to 13.0 mg/L, respectively), and, thus, it could not be ruled out that the elevated levels of manganese and iron are a result of the natural background levels of these two contaminants. Surface water samples showed elevated levels of aluminum, chromium, iron, lead, manganese, and thallium in one or more on-site samples. The lone off-site surface water sample had elevated levels of aluminum, iron, and manganese. In April 2010 EPA issued a Final Site Inspection Report [62] which concluded that (i) metals contaminants were below MCLs and Safe Drinking Water Act action levels in all residential wells that EPA tested; (2) the residential well data indicate that metals are not migrating from the fly ash to residential wells; and (iii) there are no adverse health effects expected from human exposure to surface water or sediments on the Battlefield Golf Course site as the metal concentrations were below the ATSDR standards for drinking water and soil. Additionally, the sediments samples in the ponds were below EPA Biological Technical Assistance Group screening levels and are not expected to pose a threat to ecological receptors. Similarly, beginning in 1995, the BBBS sand and gravel quarries in Gambrills, Maryland, used fly ash and bottom ash from two Maryland power plants to fill excavated portions of two sand and gravel quarries. Groundwater samples collected in 2006 and 2007 from residential drinking water wells near the site indicated that, in certain locations, contaminants, including heavy metals and sulfates, were present at or above groundwater quality standards. Private wells in 83 homes and businesses in areas around the disposal site were tested. MCLs were exceeded in 34 wells [arsenic (1), beryllium (1), cadmium (6), lead (20),[63] and thallium (6)]. SMCLs were exceeded in 63 wells [aluminum (44), manganese (14), and sulfate (5)]. The state concluded that leachate from the placement of CCRs at the site resulted in the discharge of pollutants to waters of the state.

Further details on these additional damage cases are provided in section II. C (above), and in the Appendix to this notice.

As mentioned in section II.C, during the development of this proposal, EPA received new reports from industry and citizen groups regarding damage cases. Industry provided information that, they suggested, shows that many of EPA's listed proven damage cases do not meet EPA's criteria for a damage case to be proven. On the other hand, citizen groups recently identified additional alleged damage cases. The Agency has not yet had an opportunity to evaluate this additional information. EPA's analysis, as well as the additional information from industry and citizen groups, all of which is available in the docket to this proposed rule, would

[59] The RIA monetizes the annual tonnage of greenhouse gas effects associated with the CCR beneficial use life cycle analysis, based on the 2009 interim social cost of carbon (i.e., interim SCC) of Table III.H.6–3, page 29617 of the joint EPA and DOT–NHTSA "Proposed Rulemaking to Establish Light-Duty Vehicle Greenhouse Gas Emission Standards and Corporate Average Fuel Economy Standards," **Federal Register**, Volume 74, No. 186, 28 Sept 2009. The value applied in the RIA is the $19.50 per ton median value from the $5 to $56 per ton range displayed in the 2007 column in that source. Furthermore, the RIA updated the 2007$ median value from 2007 to 2009 dollars using the NASA Gross Domestic Product Deflator Inflation Calculator at *http://cost.jsc.nasa.gov/inflateGDP.html.* EPA is aware that final SCC values were published on March 9, 2010 in conjunction with a Department of Energy final rule. EPA intends to use the final SCC values for the CCR final rule RIA. The final SCC values are published in the Department of Energy, Energy Efficiency & Renewable Energy Building Technologies Program, "Small Electric Motors Final Rule Technical Support Document: Chapter 16—Regulatory Impact Analysis," March 9, 2010 at *http://www1.eere.energy.gov/buildings/appliance_standards/commercial/sem_finalrule_tsd.html*).

[60] These benefits estimates are further discussed in Chapter 5C of the RIA which is available in the docket for this proposal.

[61] These instances are associated with 7 proven damage cases and 1 potential damage case.

[62] *http://www.epa.gov/reg3hwmd/CurrentIssues/finalr-battlefield_golf_club_site/redacted_DTN_0978_Final_Battlefield_SI_Report.pdf.*

[63] It is uncertain whether lead exceedances were due to CCRs or lead in the plumbing and water holding tanks.

benefit from public input and further review, in the interest of reaching a more complete understanding of the nature and number of damage cases. EPA encourages commenters to consider all of these analyses in developing their comments.

5. Alternatives to current disposal methods: There are no meaningful disposal alternatives other than land disposal. Improved disposal management practices are practical (*e.g.,* liners, groundwater monitoring, dust control), although EPA has not identified meaningful or practical treatment options prior to disposal, other than dewatering. (There are, however, available technologies, or technologies under development, to process CCRs now likely destined for disposal so that they can effectively be converted to appropriate beneficial uses.) The beneficial use of these materials as products continues to be an important alternative to disposal.

6. The cost of such alternative disposal methods: The Agency has estimated the nationwide costs to the electric utility industry (or to electric rate payers) for each alternative considered for this proposal. These estimates are discussed in the regulatory impact analysis presented within section XII.A of this preamble.

7. The impact of the alternative disposal methods on the use of coal and other natural resources: The alternative disposal methods mentioned above are not expected to impact the use of coal or other natural resources. However, we would note that some surface impoundments at coal-fired utilities are also used as wastewater treatment systems for other non-CCR wastewaters. Therefore, if facilities switch from wet to dry handling of CCRs, construction of alternative wastewater treatment systems could become necessary for other non-CCR wastewaters, especially if they involved acidic wastes that are currently neutralized by the coal ash. (Note that the issue of beneficial uses of CCRs is discussed below; if the effect of a subtitle C approach is to increase beneficial uses, it could lead to a decrease in the use of virgin materials like ingredients in cement making, aggregate, mined gypsum, etc. On the other hand, if the effect of that approach were to decrease beneficial uses, as some commenters suggested, it would have the opposite effect on the use of natural resources.)

8. The current and potential utilization of CCRs: In 2008, nearly 37% (50.1 million tons) of CCRs were beneficially used (excluding minefill operations) and nearly 8% (10.5 million tons) were placed in minefills. (This compares to 23% of CCRs that were beneficially used, excluding minefilling, at the time of the May 2000 Regulatory Determination, and represents a significant increase.)

Parties have commented that any regulation of CCRs under RCRA subtitle C will impose a crippling stigma on their beneficial use, and eliminate or significantly curtail these uses, even if EPA were to regulate only CCRs destined for disposal, without modifying the regulatory status of beneficial reuse. On the other hand, other parties have commented that increasing the cost of disposal of CCRs through regulation under subtitle C will actually increase their usage in non-regulated beneficial uses, simply as a result of the economics of supply and demand. States, at the same time, have commented that, by operation of state law, the beneficial use of CCRs would be prohibited under the states' beneficial use programs, if EPA designated CCRs as hazardous waste when disposed of in landfills or surface impoundments. At the time of the May 2000 Regulatory Determination, commenters had raised this similar concern, and without agreeing that regulation under RCRA subtitle C would necessarily affect the beneficial reuse of this material, EPA nevertheless strongly expressed concern that beneficial use not be adversely affected.

EPA is interested in additional information supporting the claims that "stigma" will drive people away from the use of valuable products, or that states will prohibit the reuse of CCRs under their beneficial use programs if EPA regulates any aspect of CCR management under subtitle C. Specifically, the Agency requests that commenters provide analyses and other data and information that demonstrate this to be the case. To date, we have received statements and declarations that regulation under subtitle C will have devastating effects on beneficial uses of CCRs. In addition, for those commenters who suggest that regulating CCRs under subtitle C of RCRA would raise liability issues, EPA requests that commenters describe the types of liability and the basis, data, and information on which these claims are based. The issue of beneficial use and stigma are more fully discussed in section VI, where we discuss the alternative of regulating CCRs under subtitle C of RCRA. EPA would also be interested in suggestions on methods by which the Agency could reduce any stigmatic impact that might indirectly arise as a result of regulation of CCRs destined for disposal as a "special" waste under RCRA subtitle C.

C. Preliminary Bevill Conclusions and Impact of Reconsideration

The Agency is proposing two different approaches to regulating CCRs: Regulation as a "special" waste listed under RCRA subtitle C if EPA decides to lift the Bevill exemption with respect to disposal; and regulation as a solid waste under RCRA subtitle D, if the Bevill exemption is retained for disposal. Under both of these approaches, requirements for liners and groundwater monitoring would be established, although there are differences with respect to the other types of requirements that can be promulgated by EPA under RCRA subtitle C and D. In addition, as discussed in greater detail below, one of the primary differences between the various approaches relates to the degree and extent of federal oversight, as this varies considerably between the alternatives. As noted previously, EPA has not yet reached a decision on whether to regulate CCRs under RCRA subtitle D or C, but continues to evaluate each of these options in light of the 8002(n) factors.

In determining the level of regulation appropriate for the management of CCRs, several considerations weigh heavily with the Agency; information on these issues will therefore be important for commenters to consider as they prepare their comments. One particularly critical question relates to the extent of the risks posed by the current management of this material, along with the corresponding degree of Federal oversight and control necessary to protect human health and the environment. As discussed in the preceding sections, since EPA's Regulatory Determination in May 2000, new information has called into question EPA's original assessment of the risks posed by the current management of CCRs that are disposed of. In summary, this includes (1) The results of EPA's 2010 risk assessment, which indicates that certain management practices—particularly units without composite liners and the prevalence of wet handling can pose significant risks; (2) the growing record of proven damage cases to ground water and surface water, as well as a large number of potential damage cases; (3) recent events, which have demonstrated that these wastes have caused greater damage to human health and the environment than originally estimated (*i.e.,* catastrophic environmental impacts from surface impoundment breaches, and damage resulting from "sham beneficial uses"); and (4) questions regarding the adequacy of

state regulatory programs for the management of CCRs, as many states appear to lack key protective requirements for liners and groundwater monitoring and a permitting program to ensure that such provisions are being properly implemented, even though overall industry practices appear to be improving. All of these considerations illustrate that in many cases CCRs have not been properly managed. The question is whether federal regulation is more appropriate under subtitle C or subtitle D of RCRA.

Several significant uncertainties remain with respect to all of the identified considerations. For example, as discussed previously, the data and analyses associated with this proposal are complex, and several uncertainties remain in EPA's quantitative risk analysis. One of these uncertainties is the evolving character/composition of CCRs due to electric utility upgrades and retrofits needed to comply with the emerging CAA requirements, which could present new or otherwise unforeseen contaminant issues (*e.g.,* hexavalent chromium from post-NO_X controls). Other uncertainties relate to the extent to which some sampled data with high concentrations used in the risk assessment accurately reflect coal ash leaching from landfills or surface impoundments, and the extent to which releases from surface impoundments located in close proximity to water bodies intercept drinking water wells. For example, as explained earlier in the preamble, some data reflected pore water taken in the upper section of a surface impoundment where coal refuse was placed. There were acid generating conditions and high concentrations of arsenic, but the data demonstrated that the underlying coal ash neutralized the acid conditions and greatly reduced the arsenic which leached from the bottom of the impoundment. There are also technical issues associated with releases from surface impoundments located in close proximity to water bodies which intercept drinking water wells. For example, surface impoundments are commonly placed next to rivers, which can intercept the leachate plume and prevent contamination of drinking water wells on the other side of the river. Also, in such circumstances the direction of groundwater flow on both sides of the river may be towards the river; thus, the drinking water well on the opposite side of a river may not be impacted.

As mentioned previously, EPA has received additional reports on damage cases, one from industry and one from citizen groups. Closer analyses of these reports could have the potential to significantly affect the Agency's conclusions.

An equally significant component of the overall picture, if not more so, relates to how effectively state regulatory programs address the risks associated with improper management of this material. As discussed earlier in this preamble, the continued damage cases and the reports on state regulatory programs call into question whether the trend in improving state regulatory regimes that EPA identified in May 2000 has materialized to the degree anticipated in the Regulatory Determination. Although recent information indicates that significant gaps remain, EPA continues to lack substantial details regarding the full extent of state regulatory authority over these materials, and the manner in which states have in practice, implemented this oversight. Nevertheless, based on the information made available on state programs, the Agency is reticent to establish a regulatory program without any federal oversight. Thus, EPA seeks additional details on regulation of CCRs by states to ensure that EPA's understanding of state programs is as complete as possible. While EPA recognizes that the extent of regulation of CCRs varies between states, EPA is not yet prepared to draw overall conclusions on the adequacy of state programs, as a general matter. EPA is, therefore, requesting that commenters, and particularly state regulatory authorities, provide detailed information regarding the extent of available state regulatory authorities, and the manner in which these have been, and are currently implemented. In this regard, EPA notes that "survey" type information that does not provide these details is unlikely to be able to resolve the concerns arising from the recent information developed since the May 2000 Regulatory Determination. EPA is also soliciting comments on the extent to which the information currently available to the Agency reflects current industry practices at both older and new units. For example, EPA would be particularly interested in information that indicates how many facilities currently have groundwater monitoring systems in place, how those systems are designed and monitored, and what, if anything, they have detected.

EPA has identified several issues that will be relevant as it continues to evaluate the overall adequacy of state regulatory programs. Specifically, EPA intends to consider how state regulatory programs have, in practice, evaluated and imposed requirements to address: (1) Leachate collection; (2) groundwater monitoring; (3) whether a unit must be lined, and the type of liner needed; (4) the effectiveness of existing management units as opposed to new management units; (5) whether the state requires routine analysis of CCRs; (6) whether financial responsibility requirements are in place for the management of CCRs; (7) the extent of permit requirements, including under what authorities these disposal units are permitted, the types of controls that are included in permits, and the extent of oversight provided by the states, (8) whether state programs include criteria for siting new units; (9) the extent of requirements for corrective action, post-closure monitoring and maintenance; (10) the state's pattern of active enforcement and public involvement; and (11) whether or not these facilities have insurance against catastrophic failures.

Directly related to the level of risk presented by improper management of CCRs, EPA is also weighing the differing levels of Federal oversight and control, and the practical implementation challenges, associated with the level and type of regulation under RCRA subtitles C and D. In the interest of furthering the public understanding of this topic, EPA presents an extensive discussion of the differences and concerns raised between regulation under subtitles C and D of RCRA, including a comparison of the advantages and disadvantages of each.

The subtitle C approach proposed today would provide full national cradle-to-grave control over CCRs destined for disposal, consistently managed under federally enforceable standards and through federal permits, or permits issued by the states that EPA has authorized to regulate CCRs in lieu of EPA. Permits can be a particularly important mechanism, because they allow the regulatory Agency to scrutinize the design of disposal units and the management practices of the permit applicant. They also allow the regulator to tailor the permit conditions to the facility site conditions, including the ability to impose additional specific conditions where it deems current or proposed facility practices to be inadequate to protect human health or the environment, pursuant to the omnibus authority in RCRA section 3005(c). Additionally, permitting processes provide the public and the local community the opportunity to participate in regulatory decisions. The combined requirements under subtitle C would effectively phase-out all wet handling of CCRs and prohibit the disposal of CCRs in surface impoundments. Moreover, the subtitle C approach is the only approach that

allows direct federal enforcement of the rule's requirements. The many damage cases, including more recent damage cases, suggest the value of control and oversight at the federal level.

At the same time, EPA acknowledges concerns with a subtitle C approach on the part of states, the utilities, and users of CCR-derived products. The states have expressed concern that any federal approach, including a subtitle D approach, has the potential to cause disruption to the states' implementation of CCR regulatory programs under their own authority. For example, the state of Maryland has recently upgraded its disposal standards for CCRs under its state solid waste authority, and the new state regulations address the major points in today's proposal (except the stability requirement for impoundments and the prohibition against surface impoundments). The state has expressed concern about having to revise its regulations again, and re-permit disposal units under subtitle C of RCRA. A subtitle D approach, as described in today's proposal, would eliminate or significantly reduce these concerns. EPA acknowledges these concerns, and certainly does not wish to force the states to go through unnecessary process steps. EPA nevertheless solicits comment on this issue, including more specifics on the potential for procedural difficulties for state programs, and measures that EPA might adopt to try to mitigate these effects.

Two additional substantive concerns with regulation of CCRs under subtitle C have been raised by commenters: the effect of listing CCRs as hazardous waste under RCRA on beneficial uses, and the availability of existing subtitle C landfill capacity to manage CCRs. As explained previously, EPA shares the concern that beneficial uses not be inadvertently adversely affected by the regulation of CCRs destined for disposal. EPA continues to believe that certain beneficial use, when performed properly, is the environmentally preferable destination for these materials and, therefore, wants to address any potential stigma that might arise from designating CCRs as hazardous wastes. Thus, EPA is seeking data and information, including detailed analyses, of why the subtitle C regulation outlined in today's proposal will have the impact that some commenters have identified. As explained at length in section VI of this preamble, EPA believes it can generally address the concerns that have been raised regarding the effect of subtitle C regulation on legitimate beneficial uses in today's proposal through several of the actions outlined in today's proposal. The most important of these is that EPA is not proposing to revise its May 2000 Regulatory Determination that beneficial uses retain the Bevill exemption and do not warrant federal regulation. Nevertheless, EPA agrees that "stigma" is an important consideration in the Agency's decision, and solicits information and data that will help the Agency quantify the potential effects of any stigma arising from association with CCR disposal regulated under subtitle C.

On the question of hazardous waste disposal capacity, EPA believes that management patterns of CCRs will continue: That landfills and surface impoundments currently receiving CCRs will obtain interim status and convert to RCRA subtitle C status, and that the proposal will not shift disposal patterns in a way that substantially increases the disposal of CCRs off-site from generating utilities to commercial hazardous waste landfills. Therefore, EPA's regulatory analysis assumes disposal patterns will remain generally the same. As commenters have pointed out, CCRs do, in theory, have the potential to overwhelm the current hazardous waste capacity in the United States. EPA's Biennial Report indicates that approximately two million tons of hazardous waste are disposed of annually in hazardous waste landfills, and EPA estimates that the current total national commercial hazardous waste landfill disposal capacity is between 23.5 and 30.3 million tons, while the annual amount of CCRs currently going to land disposal is 46 million tons (with an additional 29.4 million tons going to surface impoundments).[64] These figures illustrate the very large volume of CCR material involved, and how it could overwhelm existing subtitle C disposal capacity. While a DOE survey reports that 70% of disposal involves "company on-site" disposal units and 30% involves "off-site" disposal units, DOE indicated that off-site disposal capacity can be company owned or commercial disposal units. In communications with USWAG, they indicated, in some cases smaller facilities may send ash to a commercial operation, but believed that is in no way representative of the industry as a whole. In some cases, the disposal facility may be operated by a contractor for the utility, and the landfill is a captive facility that does not receive other industrial wastes. At the same time, EPA points out that, to the extent that new capacity is needed, the implementation of today's rule, if the subtitle C alternative is selected, will take place over a number of years, providing time for industry and state permitting authorities to address the issue. However, this is an issue on which EPA would find further information to be helpful. Therefore, EPA solicits detailed information on this topic, to aid in further quantifying the extent to which existing capacity may be insufficient. For example, EPA is interested in detailed information on the volume of CCRs now going off-site for disposal; the nature of off-site disposal sites (*e.g.,* commercial subtitle D landfills versus dedicated CCR landfills owned by the utility); and the amount of available land on utility sites for added disposal capacity.

Finally, the states have expressed concern that the RCRA subtitle C requirements will be considerably more expensive for them to implement than a RCRA subtitle D regulation, without providing commensurate benefits. For example, the states have reported that regulation under RCRA subtitle C, versus subtitle D, would cost them an additional $17 million per year to implement. EPA acknowledges the concern that the RCRA subtitle C requirements can be costly to implement, and could put more pressure on diminishing state budgets. However, were states to utilize the subtitle D requirements of today's proposal, the cost of implementing a RCRA subtitle D program will also be expensive. Thus, EPA is aware of the pressures on state budgets and will consider potential impacts when making a final determination for this rulemaking. Nevertheless, in the event that EPA determines that RCRA subtitle C regulation is warranted, it will be because EPA has determined that there are serious environmental and human health risks that can only be remedied by regulation under subtitle C. Further, under the subtitle C scenario, we believe that most states should be able to address any shortfalls through hazardous waste generator or disposal fees. EPA specifically solicits comments from states as to the extent to which such fees would be able to offset the costs of administering permit, inspection, and enforcement programs.

EPA notes that its estimates of costs of compliance with the subtitle C requirements have increased since its estimates in the 1999 Report to Congress; as explained later in this preamble, EPA believes these costs are commensurate with the benefits to be derived from the controls, and that the costs of regulation under RCRA subtitle D are substantial as well. For example,

[64] These figures reflect the total current capacity, not annual capacity. The annual capacity is significantly less: modifications to annual capacity would require modifications to existing permits.

one of the major potential costs under either the subtitle C or subtitle D option is associated with the required closure of all existing surface impoundments that do not meet the rule's technical requirements, which EPA is proposing under both the subtitle C and subtitle D co-proposals. Further, the technical unit design and groundwater monitoring requirements that will effectively protect human health and the environment under either option are quite similar. Finally, EPA is proposing to modify certain aspects of the RCRA subtitle C framework to address some of the practical implementation challenges associated with applying the existing regulatory framework to these wastes. However, commenters have suggested that EPA has underestimated the costs of compliance under the subtitle C requirements upstream of surface impoundments and landfills (*e.g.,* for storage). Commenters, however, have not provided specific cost estimates associated with storage of CCRs. EPA specifically solicits substantiating detail from commenters.

One disadvantage of a RCRA subtitle C approach, compared to a RCRA subtitle D approach, is that the subtitle C approach, in most states, will not go into effect as quickly as subtitle D. That is, the subtitle C regulations require an administrative process before they become effective and federally enforceable (except in the two states that are not authorized to manage the RCRA program). The RCRA hazardous waste implementation and authorization process is described in detail in sections VII and VIII of this preamble. But to summarize, federal regulations under subtitle C would not go into effect and become federally enforceable until RCRA-authorized states [65] have adopted the requirements under their own state laws, and EPA has authorized the state revisions. Under the RCRA subtitle C regulations, when EPA promulgates more stringent regulations, states are required to adopt those rules within one year, if they can do so by regulation, and two years if required by legislative action. If a state does not adopt new regulations promptly, EPA's only recourse is to withdraw the entire state hazardous waste program. If EPA determines that a subtitle C rule is warranted, the Agency will place a high priority on ensuring that states promptly pick up the new rules and become authorized, and EPA will work aggressively toward this end. Three decades of history in the RCRA program, however, suggest that this process will take two to five years (if not longer) for rules to become federally enforceable.[66]

At the same time, EPA believes there may be benefits in a RCRA subtitle D approach that establishes specific self-implementing requirements that utilities and others managing regulated CCRs would have to comply with, even in the absence of permitting or direct regulatory oversight. EPA recognizes that many of the states have regulatory programs in place, albeit with varying requirements, for the disposal of CCRs, and that industry practices have been improving. The RCRA subtitle D approach would complement existing state programs and practices by filling in gaps, and set forth criteria for disposing of CCRs to meet the national minimum standards that are designed to address key risks identified in damage cases and the risk assessment—including the risk of surface impoundment failure, which has been identified as a concern appropriate for control.

The co-proposed RCRA subtitle D option is less costly than the co-proposed RCRA subtitle C option, according to EPA's Regulatory Impact Assessment. The main differences in the costs are based on the assumption that there will be less compliance, or slower compliance, under a RCRA subtitle D option. In addition, the industry and state commenters suggested that a RCRA subtitle D approach would eliminate two of their concerns: (1) That a RCRA subtitle C approach would inappropriately stigmatize uses of CCRs that provide significant environmental or economic benefits, or that (according to those commenters) hold significant potential promise, and (2) that the volume of CCR wastes generated—particularly if requirements of a RCRA subtitle C regulation led to more off-site disposal—would overwhelm existing subtitle C capacity based on the large volumes of CCRs that are generated and would need to be disposed of. It would also reduce or eliminate expressed industry concerns about the effect of RCRA subtitle C requirements on plant operations, and state concerns related to the burden of the RCRA subtitle C permitting process. Related to the capacity issue, these same commenters have also suggested that, under the RCRA subtitle C regulations, future cleanup of poorly sited or leaking disposal sites (including historical or legacy sites) would be considerably more expensive, especially where off-site disposal was chosen as the option. (EPA's RIA does not quantify this last issue, but the RIA does discuss two recent cases as examples; EPA solicits more detailed comment on this issue, preferably with specific examples.) As stated earlier, EPA does not have sufficient information to conclude that regulation under RCRA subtitle C will stigmatize CCRs destined for beneficial use, for the reasons discussed elsewhere in today's preamble, and the Agency does not at this point have reason to assume that use of off-site commercial disposal of CCRs will increase significantly.

EPA also notes that many of the requirements discussed above would go into effect more quickly under RCRA subtitle D. Under subtitle D of RCRA, EPA would set a specific nationwide compliance date and industry would be subject to the requirements on that date, although as discussed elsewhere in today's preamble, EPA's ability to enforce those requirements is limited. (Of course, certain requirements, such as closure of existing surface impoundments, would have a delayed compliance date set to reflect practical compliance realities, but other requirements, for example, groundwater monitoring or the requirement that new surface impoundments be constructed with composite liners could be imposed substantially sooner than under a RCRA subtitle C rule.) The possible exception would be if EPA decided to establish financial assurance requirements through a regulatory process currently underway that would establish financial assurance requirements for several industries pursuant to CERCLA 108(b), including the Electric Power Generation, Transmission and Distribution Industry. For a more detailed discussion of these issues *see* section IX.

However, there are also disadvantages to any approach under RCRA subtitle D. Subtitle D provides no Federal oversight of state programs as it relates to CCRs. It establishes a framework for Federal, state, and local government cooperation in controlling the management of nonhazardous solid waste. The Federal role in this arrangement is to establish the overall regulatory direction, by providing minimum nationwide standards for protecting human health and the environment, and to provide technical assistance to states for planning and developing their own environmentally sound waste management practices. The co-proposed subtitle D alternative in this proposal would establish national minimum

[65] Currently, all but two states are authorized for the base RCRA program.

[66] In addition, existing facilities would generally operate under self-implementing interim status provisions until the state issued a RCRA permit, which is a several year process, although presumably the facility might remain under state solid waste permits, depending on state law.

standards specifically for CCRs for the first time. The actual planning and direct implementation of solid waste programs under RCRA subtitle D, however, remain state and local functions, and the act authorizes states to devise programs to deal with state-specific conditions and needs.

In further contrast to subtitle C, RCRA subtitle D requirements would regulate only the disposal of solid waste, and EPA does not have the authority to establish requirements governing the transportation, storage, or treatment of such wastes prior to disposal. Under RCRA sections 4004 and 4005(a), EPA cannot require that facilities obtain a permit for these units. EPA also does not have the authority to determine whether any state permitting program for CCR facilities is adequate. This complicates the Agency's ability to develop regulations that can be effectively implemented and tailored to individual site conditions. Moreover, EPA does not have the authority to enforce the regulations, although, the "open dumping" prohibition may be enforced by states and citizens under section 7002 of RCRA.

D. EPA Is Not Reconsidering the Regulatory Determination Regarding Beneficial Use

As noted previously, in the May 2000 Regulatory Determination, EPA concluded that federal regulation was not warranted for the beneficial uses identified in the notice, because: "(a) We have not identified any other beneficial uses that are likely to present significant risks to human health or the environment; and (b) no documented cases of damage to human health or the environment have been identified. Additionally, we do not want to place any unnecessary barriers on the beneficial uses of coal combustion wastes so they can be used in applications that conserve natural resources and reduce disposal costs." (*See* 65 FR 32221) EPA did not conduct specific risk assessments for the beneficial use of these materials, except as noted below and elsewhere in this preamble. Instead, it generally described the uses and benefits of CCRs, and cited the importance of beneficially using secondary materials and of resource conservation, as an alternative to disposal. However, EPA did conduct a detailed risk assessment of certain agricultural uses of CCRs,[67] since the use of CCRs in this manner is most likely to raise concerns from an environmental point of view. Overall, EPA concluded at the time that the identified uses of CCRs provided significant benefits (environmental and economic), that we did not want to impose an unnecessary stigma on these uses and therefore, we did not see a justification for regulating these uses at the federal level.

Since EPA's Regulatory Determination in May 2000, the Agency has gathered additional information. In addition to the evolving character/composition of CCRs due to electric utility upgrades and retrofits needed to comply with the emerging CAA requirements, which could present new or otherwise unforeseen contaminant issues (*e.g.,* hexavalent chromium from post-NO_X controls), changes include: (1) A significant increase in the use of CCRs, and the development of established commercial sectors that utilize and depend on the beneficial use of CCRs, (2) the recognition that the beneficial use of CCRs (and, in particular, specific beneficial uses of CCRs, such as using fly ash as a substitute for Portland cement in the production of concrete) provide significant environmental benefits, including the reduction of GHG emissions, (3) the development of new applications of CCRs, which may hold even greater GHG benefits (for example, fly ash bricks and a process to use CO_2 emissions to produce cement), (4) new research by EPA and others indicating that the standard leach tests—*e.g.,* the Toxicity Characteristic Leaching Procedure (TCLP) that have generally been used may not accurately represent the performance of varying types of CCRs under variable field conditions, (5) new studies and research by academia and federal agencies on the use of CCRs, including studies on the performance of CCR-derived materials in concrete, road construction,[68] and agriculture,[69] and studies of the risks that may or may not be associated with the different uses of CCRs, including uses of unencapsulated CCRs, and (6) the continuing development of state "beneficial use" regulatory programs under state solid waste authorities.

Some of these changes confirm or strengthen EPA's Regulatory Determination in May 2000 (*e.g.,* the growth and maturation of state beneficial use programs and the growing recognition that the beneficial use of CCRs is a critical component in strategies to reduce GHG emissions); other developments raise critical questions regarding this determination (*e.g.,* the potentially changing composition of CCRs as a result of improved air pollution control and the new science on metals leaching). EPA solicits information and data on these developments and how the beneficial use of CCRs will be affected (*e.g.,* increased use of fly ash in cement and concrete).

However, on balance, after considering all of these issues and the information available to us at this time, EPA believes that the most appropriate approach toward beneficial use is to leave the May 2000 Regulatory Determination in place, as the Agency, other federal agencies, academia, and society more broadly investigate these critical questions and clarify the appropriate beneficial use of these materials. This section provides EPA's basis for leaving the Bevill exemption in place for these beneficial uses, although as discussed throughout this section, EPA is also soliciting comment on unencapsulated uses of CCRs and whether they should continue to be exempted as a beneficial use under the Bevill exemption.

EPA is proposing this approach in recognition that some uses of CCRs, such as encapsulated uses in concrete, and use as an ingredient in the manufacture of wallboard, provide benefits and raise minimal health or environmental concerns. That is, from information available to date, EPA believes that encapsulated uses of CCR, as is common in many consumer products, does not merit regulation. On the other hand, unencapsulated uses have raised concerns and merit closer attention. For example, the placement of unencapsulated CCRs on the land, such as in road embankments or in agricultural uses, presents a set of issues, which may pose similar concerns as those that are causing the Agency to propose to regulate CCRs destined for disposal. Still, the amounts and, in some cases, the manner in which they are used—*i.e.,* subject to engineering specifications and material requirements rather than landfilling techniques—are very different from land disposal. EPA also notes that stakeholders, such as Earthjustice have petitioned EPA to ban particular uses of CCR; for example, the placement of CCRs in direct contact with water bodies.

Due to such issues as the changing characteristics of CCRs, as a result of more widespread use of air pollution control technologies and the new information becoming available on the

[67] Draft Final Report; Non-groundwater Pathways, Human Health and Ecological Risk Analysis for Fossil Fuel Combustion Phase 2 (FFC2) and its appendices (A through J); available at *http://www.epa.gov/osw/nonhaz/industrial/special/fossil/fsltech.htm.*

[68] *See http://www.epa.gov/osw/partnerships/c2p2/cases/index.htm.*

[69] *See http://www.epa.gov/osw/partnerships/c2p2/pubs/fgd-fs.pdf.*

leaching of metals from CCRs, we are considering approaches such as, better defining beneficial use or developing detailed guidance on the beneficial use of CCRs to supplement the regulations. The Agency solicits information and data on these and other approaches that EPA could take in identifying when uses of CCRs constitute a "beneficial use," and consequently will remain exempt.

Other alternative approaches—for example, to regulate the beneficial use of CCRs under the regulations that apply to "use constituting disposal," to prohibit unencapsulated uses outright, including CCRs used in direct contact with water matrices, including the seasonal high groundwater table, or to require front-end CCR and site characterization through the use of leach tests adapted for specific uses of CCR, prior to CCR management decisions—could address concerns that have been expressed over the land placement of CCRs. However, EPA is trying to balance concerns that proposing one or more of these alternatives might have the effect of stifling economic activities and innovation in areas that have potential for environmental benefits, while also providing adequate protection of human health and the environment.

At the same time, EPA recognizes that seven proven damage cases involving the large-scale placement, akin to disposal, of CCRs has occurred under the guise of "beneficial use"—the "beneficial" use being the filling up of old quarries or gravel pits, or the regrading of landscape with large quantities of CCRs. EPA did not consider this type of use as a "beneficial" use in its May 2000 Regulatory Determination, and does not consider this type of use to be covered by the exclusion. Therefore, today's proposed rule explicitly removes these types of uses from the category of beneficial use, such that they would be subject to the management standards that EPA finally promulgates. EPA also seeks information and data on whether it should take a similar approach in today's proposal to unencapsulated uses of CCRs, such as the placement of unencapsulated CCRs on the land—*e.g.,* agricultural uses. Alternatively, EPA is also soliciting comment on whether the Agency should promulgate standards allowing such uses, on a site-specific basis, based on a site specific risk assessment, taking into consideration, inter alia, the CCRs character and composition, their leaching potential under the range of conditions under which CCRs will be managed, and the context in which the CCRs will be applied, such as location, volume, rate of application, and proximity to water.

Before getting into a detailed discussion of the materials in question, EPA would reiterate that CCRs, when beneficially used will conserve resources, provide improved material properties, reduce GHG emissions, lessen the need for waste disposal units, and provide significant domestic economic benefits (as noted above in section XII). At the same time, EPA recognizes that there are important issues and uncertainties associated with specific uses of specific CCRs, that there has been considerable recent and ongoing research on these uses, and that the composition of CCRs are likely changing as a result of more aggressive air pollution controls. EPA is particularly concerned that we avoid the possibility of cross-media transfers stemming from CAA regulations requiring the removal of hazardous air pollutants (*e.g.,* arsenic, mercury, selenium) from utility stacks being released back into the soil and groundwater media through inappropriate "beneficial" uses.

EPA has received numerous comments on specific uses of CCRs, and we have been working with states to help them develop effective beneficial use programs (which apply to a wide range of secondary materials, not just CCRs). EPA, other federal agencies, and academia have conducted research on specific uses, and have provided guidance and best management practices on using CCRs in an environmentally sound manner in a range of applications. For example, EPA, working with the Federal Highway Administration (FHWA), DOE, the American Coal Ash Association (ACAA), and USWAG issued guidance in April 2005 on the appropriate use of coal ash in highway construction. EPA understands that the composition of CCRs, the nature of different CCR uses, and the specific environment in which CCRs are used, can affect the effectiveness and the environmentally sound use of particular projects. In today's proposal, EPA is suggesting that an appropriate balance can be met by (1) determining that the placement of CCRs in sand and gravel pits, as well as the use of large volumes of CCRs in restructuring landscapes to constitute disposal, rather than the beneficial use of CCRs, and at the same time (2) leaving in place its determination that the beneficial uses of CCRs—*e.g.,* those identified in the May 2000 Regulatory Determination as clarified in this notice—should not be prohibited from continuing. As described later in this section of today's notice, EPA solicits comment on whether an alternative approach is appropriate, particularly for unencapsulated uses of CCRs on the land.

1. Why is EPA not proposing to change the determination that CCRs that are beneficially used do not warrant federal regulation?

As an initial matter, we would note that for some of the beneficial uses, CCRs are a raw material used as an ingredient in a manufacturing process that have never been "discarded,[70]" and thus, would not be solid wastes under the existing hazardous waste rules. For example, synthetic gypsum is a product of the FGD process at coal-fired power plants. In this case, the utility designs and operates its air pollution control devices to produce an optimal product, including the oxidation of the FGD to produce synthetic gypsum. In this example, after its production, the utility treats FGD as a valuable input into a production process, *i.e.,* as a product, rather than as something that is intended to be discarded. Wallboard plants are sited in close proximity to power plants for access to raw material, with a considerable investment involved. Thus, FGD gypsum used for wallboard manufacture is a product rather than a waste or discarded material. This use and similar uses of CCRs that meet product specifications would not be affected by today's proposed rule in any case, regardless of the option taken.

With that said, today's proposed action would leave in place EPA's May 2000 Regulatory Determination that beneficially used CCRs do not warrant federal regulation under subtitle C or D of RCRA. As EPA stated in the May 2000 Regulatory Determination, "In the [Report to Congress], we were not able to identify damage cases associated with these types of beneficial uses, nor do we now believe that these uses of coal combustion wastes present a significant risk to human health and the environment. While some commenters disagreed with our findings, no data or other support for the commenters' position was provided, nor was any information provided to show risk or damage associated with agricultural use. Therefore, we conclude that none of the beneficial uses of coal combustion wastes listed above pose risks of concern." (*See* 65 FR 32230.) Since that time, EPA is not aware of data or other information to indicate that existing

[70] In order for EPA to regulate a material under RCRA, the material must be a solid waste, which the statute defines as materials that have been discarded. *See* Section 1004(27) of RCRA for definition of solid waste.

efforts of states, EPA and other federal agencies are not adequate to address environmental issues associated with the beneficial uses of CCRs, that were originally identified in the Regulatory Determination. Therefore, at this time, EPA is not proposing to reverse that determination. Specifically: (1) EPA believes today's proposal will ensure that inappropriate beneficial use situations, like the Gambrills, MD site, will be regulated as disposal; (2) many states are developing effective beneficial use programs which, in many cases, allow the use of CCRs as long as they are demonstrated to be non-hazardous materials, and (3) EPA does not wish to inhibit or eliminate the significant and measurable environmental and economic benefits derived from the use of this valuable material without a demonstration of an environmental or health threat.

EPA also wants to make clear that wastes that consist of or contain these Bevill-exempt beneficially used materials, including demolition debris from beneficially used CCRs in wallboard or concrete that were generated because the products have reached the end of their useful lives—would also not be listed as a special waste subject to subtitle C of RCRA, from the point of their generation to their ultimate disposal.

In summary, EPA continues to believe that the beneficial use of CCRs, when performed properly and in an environmentally sound manner, is the environmentally preferable outcome for CCRs and, therefore, is concerned about regulatory decisions that would limit beneficial uses, including research on beneficial uses. Thus, EPA is not proposing to modify the existing Bevill exemption for CCRs (sometimes referred to as CCPs when beneficially used), and instead is proposing to leave the current determination in place. However, EPA recognizes that there is a disparity in the quality of state programs dealing with beneficial uses, uncertainty relative to the future characteristics of CCRs and, therefore, uncertainty concerning the risks associated with some beneficial uses. At the same time, EPA recognizes the potential environmental benefits with regard to the uses of CCRs. For these reasons, EPA is requesting information and data on the appropriate means of characterizing beneficial uses that are both protective of human health and the environment and provide benefits. EPA is also requesting information and data demonstrating where the federal and state programs are or have been inadequate in being environmentally protective and, conversely, where states have, or are developing, increasingly effective beneficial use programs.

As previously discussed, and discussed in section VI, some stakeholders have commented that EPA should not regulate CCRs when disposed of in landfills or surface impoundments as a hazardous waste, because such an approach would stigmatize the beneficial use of CCRs, and these uses would disappear. Although it remains unclear whether any stigmatic effect from regulating CCRs destined for disposal as hazardous waste would decrease the beneficial use of CCRs, and irrespective of whether EPA ultimately concludes to promulgate regulations under RCRA subtitles C or D, EPA is convinced that regulating the beneficial use of CCRs under RCRA subtitle C as hazardous waste would be unnecessary, in light of the potential risks associated with these uses. For example, use of fly ash as a replacement for Portland cement is one of the most environmentally beneficial uses of CCRs (as discussed below), yet regulating this beneficial use under RCRA subtitle C requirements would substantially increase the cost and regulatory difficulties of using this material, without providing any corresponding risk reduction. Regulating the use of coal ash as a cement ingredient under RCRA subtitle C would subject the coal ash to full hazardous waste requirements up to the point that it is made into concrete, including requirements for generators, manifesting for transportation, and permits for storage. In addition, ready-mix operators would be subject to the land disposal restrictions and other requirements, as use of the concrete would constitute disposal if placed on the land. EPA instead is proposing an approach that would allow beneficial uses to continue, under state controls, EPA guidance, and current industrial standards and practices. Where specific problems are identified, EPA believes they can be safely addressed, but we do not believe that an approach that eliminates a wide range of uses that would add considerably to the costs of the rule, and that would disrupt and potentially close ongoing businesses legitimately using CCRs is justified, on the strength of the existing evidence.

EPA's May 2000 Regulatory Determination not to regulate various beneficial uses under the hazardous waste requirements, and today's proposal to leave that determination in place, does not conflict with EPA's view that certain beneficial uses, *e.g.,* use in road construction or agriculture, should be conducted with care, according to appropriate management practices, and with appropriate characterization of the material and the site where the materials would be placed. In this respect, CCRs are similar to other materials used in this manner—including raw materials derived from quarried aggregates, secondary materials from other industrial processes, and materials derived from natural ores. Rather, EPA concludes that, based on our knowledge of how CCRs are used, that potential risks of these uses do not warrant federal regulation, but can be addressed, if necessary, in other ways, as discussed previously, such as the State of Wisconsin has an extensive beneficial use program that supports the use of CCRs in a variety of circumstances, including in road base construction and agriculture uses, provided certain criteria are met. Similarly, EPA is working with the U.S. Department of Agriculture to develop guidance on the use of FGD gypsum in agriculture.

2. What constitutes beneficial use?

As discussed previously, EPA is not proposing to change the regulatory status of those CCRs that are beneficially used. However, because EPA is proposing to draw a distinction between CCRs that are destined for disposal and those that are beneficially used, we believe it is necessary and appropriate to distinguish between beneficial use and operations that would constitute disposal operations—such as large volumes of CCRs that are used in sand and gravel pits or for restructuring the landscape. EPA believes the following criteria can be used to define legitimate beneficial uses appropriately, and are consistent with EPA's approach in the May 2000 Regulatory Determination, although such criteria were not specifically identified at that time:

○ The material used must provide a functional benefit. For example, CCRs in concrete increase the durability of concrete—and are more effective in combating degradation from salt water; synthetic gypsum serves exactly the same function in wallboard as gypsum from ore, and meets all commercial specifications; CCRs as a soil amendment adjusts the pH of soil to promote plant growth.

○ The material substitutes for the use of a virgin material, conserving natural resources that would otherwise need to be obtained through practices, such as extraction. For example, the use of FGD gypsum in the manufacture of wallboard (drywall) decreases the need to mine natural gypsum, thereby conserving the natural resource and conserving energy that otherwise would be needed to mine natural gypsum; the use of fly ash in

lieu of portland cement reduces the need for cement. CCRs used in road bed replace quarried aggregate or other industrial materials. These CCRs substitute for another ingredient in an industrial or commercial product.

○ Where relevant product specifications or regulatory standards are available, the materials meet those specifications, and where such specifications or standards have not been established, they are not being used in excess quantities. Typically, when CCRs are used as a commercial product, the amount of CCRs used is controlled by product specifications, or the demands of the user. Fly ash used as a stabilized base course in highway construction is part of many engineering considerations, such as the ASTM C 593 test for compaction, the ASTM D 560 freezing and thawing test, and a seven day compressive strength above 2760 (400 psi). If excessive volumes of CCRs are used—*i.e.,* greater than were necessary for a specific project,—that could be grounds for a determination that the use was subject to regulations for disposal.

○ In the case of agricultural uses, CCRs would be expected to meet appropriate standards, constituent levels, prescribed total loads, application rates, etc. EPA has developed specific standards governing agricultural application of biosolids. While the management scenarios differ between biosludge application and the use of CCRs as soil amendments, EPA would consider application of CCRs for agriculture uses not to be a legitimate beneficial use if they occurred at constituent levels or loading rates greater than EPA's biosolids regulations allow.[71] EPA also recognizes that the characteristics of CCRs are such that total concentrations of metals, as biosolids are assessed, may not be the most appropriate standard, as CCRs have been shown to leach metals with significant variability.

EPA is proposing that these criteria be included in the regulations as part of the definition of beneficial use. EPA requests comment on these criteria, as well as suggestions for other criteria that may need to be included to ensure that legitimate beneficial uses can be identified and enforcement action can be taken against inappropriate uses.

Each of the uses identified in the May 2000 Regulatory Determination, CCRs can and have been utilized in a manner that is beneficial. The discussion that follows provides a brief summary of how certain of the beneficial uses meet the various criteria. EPA solicits comment on the need to provide a formal listing of all beneficial uses. To this end, EPA solicits comment on whether additional uses of CCRs have been established since the May 2000 Regulatory Determination that have not been discussed elsewhere in today's preamble should be regarded as beneficial. Of particular concern in this regard are reports that CCRs are being used in producing counter tops, bowling balls, and in the production of makeup. The Agency solicits comment on whether use of CCRs in consumer products of this kind can be safely undertaken. The Agency further solicits comments for any new uses of CCR, as well as the information and data that supports that it is beneficially used in an environmentally sound manner. The concern with such an alternative is that new and innovative uses that are not on the list would be subject to disposal regulations, until EPA revised its rule.

In the uses where the CCR is encapsulated in the product, such as cement, concrete, brick and concrete products, wallboard, and roofing materials—the CCRs provide a functional benefit—that is, the CCRs provide a cementitious or structural function, the CCRs substitute for cement, gypsum, and aggregate and thus save resources that would otherwise need to be mined and processed, and the CCRs are subject to product specifications, such as ASTM standards. Some of the uses, such as CCRs in paints and plastics not only provide benefits, but EPA generally does not consider materials used in these ways to be waste—that is, they have not been discarded. Use of CCRs in highway projects is a significant practice covering road bed and embankments. CCRs used according to FHA/DOT standards provide an important function in road building, replacing material that would otherwise need to be obtained, such as aggregate or clay. In many cases, the CCRs can lead to better road performance. For snow and ice controls, the beneficial use is limited to boiler slag and bottom ash, which replaces fine aggregate that would otherwise need to be used to prevent skidding, and amounts used are in line with the materials they replace.[72]

3. Disposal of CCRs in Sand and Gravel Pits and Large Scale Fill Operations Is Not Considered a Beneficial Use

As indicated earlier, EPA has identified several proven damage cases associated with the placement of CCRs in sand and gravel pits. There has also been significant community concern with large-scale fill operations. Because of the damage cases and the concern that sand and gravel pits and large scale fill operations are essentially landfills under a different name, EPA is clarifying and, thus, proposing to define the placement of CCRs in sand and gravel pits and large scale fill projects as land disposal that would be subject to either the proposed RCRA subtitle C or D regulations. Sites that are excavated so that more coal ash can be used as fill are also considered CCR landfills.

However, EPA recognizes that we need to define or provide guidance on the meaning of "a large scale fill operation." EPA solicits comments on appropriate criteria to distinguish between legitimate beneficial uses and inappropriate operations, such as, for example, a comparison to features associated with relatively small landfills used by the utility industry, and whether characteristics of the materials would allow their safe use for a particular application in a particular setting (*i.e.,* characterize both the materials for the presence of leachable metals and the area where the materials will be placed).

4. Issues Associated With Unencapsulated Beneficial Uses

Since the May 2000 Regulatory Determination, the major issues associated with the placement of CCRs on the land for beneficial use has involved the Gambrills, MD site which involves a sand and gravel pit and the Battlefield golf course, which was a large scale fill operation. These are the types of operations that EPA is proposing would be subject to any disposal regulations proposed in today's rule. However, because the Gambrills and Battlefield sites involved the unencapsulated placement of CCRs on the land, it raises questions regarding the beneficial use of unencapsulated uses of CCRs; accordingly, in this section, the Agency presents information on the issues on which it is specifically soliciting comment.

First, we identify the array of environmental issues associated with unencapsulated uses. CCRs can leach toxic metals at levels of concern, so depending on the characteristics of the CCR, the amount of material placed, how it is placed, and the site conditions, there is a potential for environmental concern.

• The importance of characterizing CCRs prior to their utilization is that CCRs from certain facilities may be acceptable under particular beneficial

[71] *See* 40 CFR part 503.

[72] According to the ACAA survey, 80% of boiler slag—a vitreous material often used as an abrasive—is reused, although industry has reported that the demand for boiler slag products is high, and virtually all of the slag is currently used.

use scenarios, while the same material type from a different facility or from the same facility, but generated under different operating conditions (*e.g.,* different air pollution controls or configurations) may not be acceptable for the same management scenario. Changes in air pollution controls will result in fly ash and other CCRs presenting new contaminant issues (*e.g.,* hexavalent chromium from post-NOx controls). Additionally, as described in section I. F. 2, there is significant variability in total metals content and leach characteristics.

• The amount of material placed can significantly impact whether placement of unencapsulated CCRs causes environmental risks. There are great differences between the amount of material disposed of in a landfill and in beneficial use settings. For example, a stabilized fly ash base course for roadway construction may be on the order of 6 to 12 inches thick under the road where it is used—these features differ considerably from the landfill and sand and gravel pit situations where hundreds of thousands to millions of tons of CCRs are disposed of and for which damage cases are documented.

• Unencapsulated fly ash used for structural fill is moistened and compacted in layers, and placed on a drainage layer. By moistening and compacting the fly ash in layers, the hydraulic conductivity can be greatly reduced, sometimes achieving levels similar to liner systems. This limits the transport of water through the ash and thus acts to protect groundwater. The drainage layer prevents capillary effects and thus also limits the amount of water that remains in contact with the fly ash. Although EPA is not aware of the use of organosilanes for beneficial use operations in the U.S., if mixed with fly ash, it is reported to be able to essentially render the fly ash impermeable to water, and thus there may be emerging placement techniques that can also greatly influence the environmental assessment.

• Site conditions are important factors. Hydraulic conductivity of the subsurface, the rainfall in the area, the depth to groundwater, and other factors (*e.g.,* changes in characteristics due to the addition of advanced air pollution controls) are important considerations in whether a specific beneficial use will remain protective of the environment.

Second, EPA notes the work and research being done by states, federal agencies, and academics to assess, provide guidance on, or regulate to address the environmental issues that may be associated with beneficial use. In addition to the recent EPA research on constituent leaching from CCRs described earlier in the preamble, a few highlights include:

• Many states have beneficial use programs. The ASTSWMO 2006 Beneficial Use Survey Report states: "A total of 34 of the 40 reporting States, or 85 percent, indicated they had either formal or informal decision-making processes or beneficial use programs relating to the use of solid wastes." [73] (*http://www.astswmo.org/files/publications/solidwaste/2007BUSurveyReport11–30–07.pdf*) For example, Wisconsin's Department of Natural Resources has developed a regulation (NR 538 Wis. Adm. Code), which includes a five-category system to allow for the beneficial use of industrial by-products, including coal ash. The state has approved CCRs in a full range of uses, including road construction and agricultural uses.

• EPA and USDA are conducting a multi-year study on the use of FGD gypsum in agriculture. The results of that study should be available in late 2012.

• EPA developed an easy to use risk model for assessing the use of recycled industrial materials in highways. This model is shared with states to facilitate assessments to determine if such beneficial use projects will be environmentally protective.[74]

• There is also considerable study and research by states and academic institutions, which EPA views as valuable in not only guiding the parties to appropriate uses, but also in informing EPA. A few examples are:

○ Li L, Benson CH, Edil TB, Hatipoglu B. Groundwater impacts from coal ash in highways. Waste and Management Resources 2006;159(WR4):151–63.

○ Friend M, Bloom P, Halbach T, Grosenheider K, Johnson M. Screening tool for using waste materials in paving projects (STUWMPP). Office of Research Services, Minnesota Dept. of Transportation, Minnesota; 2004. Report nr MN/RC–2005–03.

○ Sauer JJ, Benson CH, Edil TB. Metals leaching from highway test sections constructed with industrial byproducts. University of Wisconsin—Madison, Madison, WI: Geo Engineering, Department of Civil and Environmental Engineering; 2005 December 27, Geo Engineering Report No. 05–21.

Overall, federal agencies, states, and others are doing a great amount of work to promote environmentally sound beneficial use practices, to advance our understanding, and to consider emerging science and practices. Furthermore, the beneficial use of CCRs is a world wide activity, so there is also considerable work and effort from around the globe. In Europe, nearly all CCRs are beneficially used, and when used are considered to be products rather than wastes. Sweden, for example, actively supports the use of CCRs in road construction, and has conducted long-term tests of its use in this manner.

While recognizing the many beneficial use opportunities for CCRs, EPA believes it is imperative to gather a full range of views on the issue of unencapsulated uses in order to ensure the protection of human health and the environment. EPA is fully prepared to reconsider our proposed approach for these uses if comments provide information and data to demonstrate that it is inappropriate. For example, previous risk analyses do not address many of the use applications currently being implemented, and have not addressed the changes to CCR composition with more advanced air pollution control methods and improved leachate characterization. In addition, some scientific literature indicates that the uncontrolled (*i.e.,* excessive) application of CCRs can lead to the potentially toxic accumulation of metals (*e.g.,* in agricultural applications [75] and as fill material [76]). Thus, while EPA does not want to negatively impact the legitimate beneficial use of CCRs unnecessarily, we are also aware of the need to fully consider the risks, management practices, state controls, research, and any other pertinent information. Thus, to help EPA determine whether to revise

[73] Part of EPA's efforts with the states is to support the development of a national database on state beneficial use determinations. Information on the beneficial use determination database can be found on the Northeast Waste Management Officials' Association (NEWMOA) Web site at *http://www.newmoa.org/solidwaste/bud.cfm.* This database helps states share information on beneficial use decisions providing for more consistent and informed decisions.

[74] *See* a Final Report titled, "Use of EPA's Industrial Waste Management Evaluation Model (IWEM) to Support Beneficial Use Determinations" at *http://www.epa.gov/partnerships/c2p2/pubs/iwem-report.pdf* and the Industrial Waste Management Evaluation Model (IWEM) at *http://www.epa.gov/osw/nonhaz/industrial/tools/iwem.*

[75] *See,* for example, "Effects of coal fly ash amended soils on trace element uptake in plant," S.S. Brake, R.R. Jensen, and J. M. Mattox, Environmental Geology, November 7, 2003 *available at http://www.springerlink.com/content/3c5gaq2qrkr5unvp/fulltext.pdf.*

[76] *See* information regarding the Town of Pines Groundwater Plume at *http://www.epa.gov/region5superfund/npl/sas_sites/INN000508071.htm. Also see* additional information for this site at *http://www.epa.gov/region5/sites/pines/#updates.*

its approach and regulate, for example, unencapsulated uses of CCRs on the land, we solicit comments on whether to regulate, and if so, the most appropriate regulatory approach to be taken. For example, EPA might consider a prohibition on these uses, except where, as part of a case-by-case, or material-by-material petition process where appropriate characterization of the material is used (including taking into account the pH to which the material will be exposed) and a risk assessment, approved by a regulatory Agency, shows that the risks were within acceptable ranges.[77] Moreover, if regulating these uses under the RCRA hazardous waste authority is deemed warranted, the risk assessment would have to be approved, through a notice-and-comment process, by EPA or an authorized state. EPA expects that the risk assessment would be based on actual leach data from the material. (*See* request for comment below on material characterization.)

In reaching its decision on whether to regulate unencapsulated uses, EPA would be interested in comments and data on the following:

- We would like comment on whether persons should be required to use a leaching assessment tool in combination with the Draft SW–846 leaching test methods described in Section I. F. 2 and other tools (*e.g.,* USEPA's *Industrial Waste Management Evaluation Model* (IWEM)) to aid prospective beneficial users in calculating potential release rates over a specified period of time for a range of management scenarios, including use in engineering and commercial applications using probabilistic assessment modeling.
- As discussed previously, EPA is working with USDA to study agricultural use of FGD gypsum to provide further knowledge in this area. The Agency is interested in comments relating to the focus of these assessments, the use of historical data, the impact of pH on leaching potential of metals, the scope of management scenarios, the variable and changing nature of CCRs, and variable site conditions. Commenters interested in the EPA/USDA effort should consider the characteristics of FGD gypsum (*see http://www.epa.gov/epawaste/partnerships/c2p2/pubs/fgdgyp.pdf*) and information on the current study (*see http://www.epa.gov/epawaste/partnerships/c2p2/pubs/fgd-fs.pdf*).
- If EPA determines that regulations are needed, should EPA consider removing the Bevill exemption for such unencapsulated uses and regulate these under RCRA subtitle C or should EPA develop regulations under RCRA subtitle D?
- If materials characterization is required, what type of characterization is most appropriate? If the CCRs exceed the toxicity characteristic at pH levels different from the TCLP, should they be excluded from beneficial use? When are total levels relevant? EPA solicits information and data on the extent to which states request and evaluate CCR characterization data prior to the use of unencapsulated CCRs (keeping in mind that EPA ORD studies generally show that measurement of total concentrations for metals do not correlate well with metal leachate concentrations).
- If regulations are developed, should they cover specific practices, for example, restricting fill operations to those that moisten and compact fly ash in layers to attain 95% of the standard Proctor maximum dry density value and provide a drainage layer? Are such construction practices largely followed now?
- Historically, EPA has proposed or imposed conditions on other types of hazardous wastes destined for land placement (*e.g.,* maximum application rates and risk-based concentration limits for cement kiln dust used as a liming agent in agricultural applications (*see* 64 FR 45639; August 20, 1999); maximum allowable total concentrations for non-nutritive and toxic metals in zinc fertilizers produced from recycled hazardous secondary materials (*see* 67 FR 48393; July 24, 2002). Comments are solicited as to whether EPA should establish standards or rely on implementing states to impose CCR-/site-specific limits based on front-end characterization that ensures individual beneficial uses remain protective.
- Whether to exclude from beneficial use unencapsulated uses in direct contact with water bodies (including the seasonal high groundwater table)?

E. Placement of CCRs in Minefilling Operations

In today's proposal, EPA is not addressing its Regulatory Determination on minefilling, and instead will work with the OSM to develop effective federal regulations to ensure that the placement of coal combustion residuals in minefill operations is adequately controlled. In doing so, EPA and OSM will consider the recommendations of the National Research Council (NRC), which, at the direction of Congress, studied the health, safety, and environmental risks associated with the placement of CCRs in active and abandoned coal mines in all major U.S. coal basins. The NRC published its findings on March 1, 2006, in a report entitled "Managing Coal Combustion Residues (CCRs) in Mines," which is available at *http://books.nap.edu/openbook.php?isbn=0309100496.*

The report concluded that the "placement of CCRs in mines as part of coal mine reclamation may be an appropriate option for the disposal of this material. In such situations, however, an integrated process of CCR characterization, site characterization, management and engineering design of placement activities, and design and implementation of monitoring is required to reduce the risk of contamination moving from the mine site to the ambient environment." The NRC report recommended that enforceable federal standards be established for the disposal of CCRs in minefills to ensure that states have specific authority and that states implement adequate safeguards. The NRC Committee on Mine Placement of Coal Combustion Wastes also stated that OSM and its SMCRA state partners should take the lead in developing new national standards for CCR use in mines because the framework is in place to deal with mine-related issues. Consistent with the recommendations of the National Academy of Sciences, EPA anticipates that the U.S. Department of the Interior (DOI) will take the lead in developing these regulations. EPA will work closely with DOI throughout that process. Therefore, the Agency is not addressing minefilling operations in this proposed rule.

F. EPA Is Not Proposing To Revise the Bevill Determination for CCRs Generated by Non-Utilities

In this notice, EPA is not proposing to revise the Bevill exclusion for CCRs generated at facilities that are not part of the electric power sector and which use coal as the fuel in non-utility boilers, such as manufacturing facilities, universities, and hospitals. The Agency lacks sufficient information at this time to determine an appropriate course of action for the wastes from these facilities.

Industries that primarily burn coal to generate power for their own purposes (*i.e.,* non-utilities), also known as combined heat and power (CHP) plants, are primarily engaged in business activities, such as agriculture, mining, manufacturing, transportation, and education. The electricity that they generate is mainly for their own use, but

[77] As part of the petition application, the petitioner would also need to demonstrate that the CCRs are being beneficially used.

any excess may be sold in the wholesale market.[78] According to the Energy Information Administration (EIA), CHPs produced 2.7% of the total electricity generated from coal combustion in 2007 [79] and burned 2.3% of the total coal consumed for electricity generation (24 million tons) [80] at 2,967 facilities.[81] EPA estimates that CHPs generate approximately 3 million tons of CCRs annually or an average of just over 1,000 tons per facility. This is in comparison to electric utilities, which generated 136 million tons of CCRs in 2008, or an average of approximately 275,000 tons per facility. In addition, these manufacturing facilities generate other types of waste, many of which are generated in much larger quantities than CCRs, and thus, they are likely to be mixed or co-managed together. As a result, the composition of any co-managed waste might be fundamentally different from the CCRs that are generated by electric utilities. Presently, EPA lacks critical data from these facilities sufficient to address key Bevill criteria such as current management practices, damage cases, risks, and waste characterization. Thus, EPA solicits information and data on CCRs that are generated by these other industries, such as volumes generated, characteristics of the CCRs, whether they are co-managed with other wastes generated by the industry, as well as other such information. In addition, EPA does not currently have enough information on non-utilities to determine whether a regulatory flexibility analysis would be required under the Regulatory Flexibility Act, nor to conduct one if it is necessary. Therefore, the Agency has decided not to assess these operations in today's proposal, and will instead focus on the nearly 98% of CCRs that are generated at electric utilities.

V. Co-Proposed Listing of CCRs as a Special Waste Under RCRA Subtitle C and Special Requirements for Disposal of CCRs Generated by Electric Utilities

One of the alternatives in today's co-proposal is to add a new category of wastes that would be subject to regulation under subtitle C of RCRA, by adding to 40 CFR part 261, Subpart F—Special Wastes Subject to Subtitle C Regulations for CCRs destined for disposal. Under this alternative, the Agency further proposes to list CCRs destined for disposal as a special waste and CCRs would then be subject to regulation under 40 CFR parts 260 through 268 and 270 to 279 and 124, and subject to the notification requirements of section 3010 of RCRA. This listing would apply to all CCRs destined for disposal. This section provides EPA's basis for regulating CCRs under subtitle C of RCRA when disposed. As described in this preamble, the proposed listing would not apply to CCRs that are beneficially used (*see* section IV), CCRs that are part of a state or federally required cleanup that commenced prior to the effective date of the final rule (*see* section VI), or CCRs generated by facilities outside the electric power sector (*see* section IV).

A. What is the basis for listing CCRs as a special waste?

Many of the underlying facts on which EPA would rely on to support its proposed special waste listing have been discussed in the previous sections, which lay out reasons why the Agency may decide to reverse the Bevill Regulatory Determination and exemption. Rather than repeat that discussion here, EPA simply references the discussion in the earlier sections. In addition, EPA would be relying on the various risk assessments conducted on CCRs to provide significant support for a listing determination. EPA's risk assessment work includes four analyses: (1) U.S. EPA 1998, "Draft Final Report: Non-groundwater Pathways, Human Health and Ecological Risk Analysis for Fossil Fuel Combustion Phase 2 (FFC2)" (June 5, 1998) referred to hereafter as the 1998 Non-groundwater risk assessment (available in docket # F–1999–FF2P–FFFFF in the RCRA Information Center, and on the EPA Web site at *http://www.epa.gov/osw/nonhaz/industrial/special/fossil/ngwrsk1.pdf*); (2) preliminary groundwater and ecological risk screening of selected constituents in U.S. EPA 2002, "Constituent Screening for Coal Combustion Wastes," (contractor deliverable dated October 2002, available in docket EPA–HQ–RCRA–2006–0796 as Document # EPA–HQ–RCRA–2006–0796–0470); referred to hereafter as the 2002 screening analysis; (3) U.S. EPA 2010a, "Human and Ecological Risk Assessment of Coal Combustion Wastes" (April 2010) available in the docket for this proposed rule, and referred to hereafter as the 2010 risk assessment; and (4) U.S. EPA 2010b, "Inhalation of Fugitive Dust: A Screening Assessment of the Risks Posed by Coal Combustion Waste Landfills—DRAFT" available in the docket for this proposed rule. As explained below, the 2010 risk assessment correlates closely with the listing criteria in EPA's regulations.

1. Criteria for Listing CCRs as a Special Waste and Background on 2010 Risk Assessment

In making listing determinations under subtitle C of RCRA, the Agency considers the listing criteria set out in 40 CFR 261.11. EPA considered these same criteria in making the proposed special waste listing decision.

The criteria provided in 40 CFR 261.11(a)(3) include eleven factors that EPA must consider in determining whether the waste poses a "substantial present or potential hazard to human health and the environment when improperly treated, stored, transported or disposed of or otherwise managed." Nine of these factors, as described generally below, are incorporated or are considered in EPA's risk assessment for the waste streams of concern:

- Toxicity (Sec. 261.11(a)(3)(i)) is considered in developing the health benchmarks used in the risk assessment modeling.
- Constituent concentrations (Sec. 261.11(a)(3)(ii)) and the quantities of waste generated (Sec. 261.11(a)(3)(viii)) are combined in the calculation of the levels of the CCR constituents that pose a hazard.
- Potential of the hazardous constituents and any degradation products to migrate, persist, degrade, and bioaccumulate (sections 261(a)(3)(iii), 261.11(a)(3)(iv), 261.11(a)(3)(v), and 261.11(a)(3)(vi)) are all considered in the design of the fate and transport models used to determine the concentration of the contaminants to which individuals are exposed.
- Two of the factors, plausible mismanagement and the regulatory actions taken by other governmental entities based on the damage caused by the constituents ((§§ 261.11(a)(3)(vii) and 261.11(a)(3)(x)), were used in establishing the waste management scenario(s) modeled in the risk assessment.

One of the remaining factors of the eleven listed in 261.11(a)(3) is consideration of damage cases (§ 261.11(a)(3)(ix)); these are discussed in section II. C. The final factor allows EPA to consider other factors as appropriate (§ 261.11(a)(3)(xi)).

As discussed earlier, EPA conducted analyses of the risks posed by CCRs and determined (subject to consideration of public comment) that it would meet the criteria for listing set forth in 40 CFR 261.11(a)(3). The criteria for listing determinations found at 40 CFR part

[78] Energy Information Administration (*http://www.eia.doe.gov/cneaf/electricity/page/prim2/toc2.html#non*).

[79] *http://www.eia.doe.gov/cneaf/electricity/epa/epaxlfile1_1.pdf.*

[80] *http://www.eia.doe.gov/cneaf/electricity/epa/epaxlfile4_1.pdf.*

[81] *http://www.eia.doe.gov/cneaf/electricity/epa/epaxlfile2_3.pdf.*

261.11 require the Administrator to list a solid waste as a hazardous waste (and thus subject to subtitle C regulation) upon determining that the solid waste meets one of three criteria in 40 CFR 261.11(a)(1)-(3). As just noted, the criteria considered by EPA in determining that listing is warranted pursuant to 40 CFR 261.11(a)(3) are:

• Whether the waste contains any of the toxic constituents listed in Appendix VIII of 40 CFR part 261 (Hazardous Waste Constituents) and, after considering the following factors, the Administrator concludes that the waste is capable of posing a substantial present or potential hazard to human health or the environment when improperly treated, stored, transported or disposed of, or otherwise managed:

(i) The nature of the toxicity presented by the constituent.

(ii) The concentration of the constituent in the waste.

(iii) The potential of the constituent or any toxic degradation product of the constituent to migrate from the waste into the environment under the types of improper management considered in paragraph (vii).

(iv) The persistence of the constituent or any toxic degradation product of the constituent.

(v) The potential for the constituent or any toxic degradation product of the constituent to degrade into non-harmful constituents and the rate of degradation.

(vi) The degree to which the constituent or any degradation product of the constituent bioaccumulates in ecosystems.

(vii) The plausible types of improper management to which the waste could be subjected.

(viii) The quantities of the waste generated at individual generation sites or on a regional or national basis.

(ix) The nature and severity of the human health and environmental damage that has occurred as a result of the improper management of wastes containing the constituent.

(x) Action taken by other governmental agencies or regulatory programs based on the health or environmental hazard posed by the waste or waste constituent.

(xi) Such other factors as may be appropriate.

In 1994, EPA published a policy statement regarding how the Agency uses human health and environmental risk estimates in making listing decisions, given the uncertainty that can co-exist with risk estimates. Specifically:

"* * * the Agency's listing determination policy utilizes a "weight of evidence" approach in which risk is a key factor * * * however, risk levels themselves do not necessarily represent the sole basis for a listing. There can be uncertainty in calculated risk values and so other factors are used in conjunction with risk in making a listing decision. * * *. EPA's current listing determination procedure * * * uses as an initial cancer risk "level of concern" a calculated risk level of 1×10^{-5} (one in one hundred thousand) * * * (1) Waste streams for which the calculated high-end individual cancer-risk level is 1×10^{-5} or higher generally are considered candidates for a list decision * * * (2) Waste streams for which these risks are calculated to be 1×10^{-4} or higher * * * generally will be considered to pose a substantial present or potential hazard to human health and the environment and generally will be listed as hazardous waste. Such waste streams fall into a category presumptively assumed to present sufficient risk to require their listing as hazardous waste. However, even for these waste streams there can in some cases be factors which could mitigate the high hazard presumption. These additional factors * * * will also be considered by the Agency in making a final determination. (3) Waste streams for which the calculated high-end individual cancer-risk level is lower than 1×10^{-5} generally are considered initial candidates for a no-list decision. (4) Waste streams for which these risks are calculated to be 1×10^{-6} or lower, and lower than 1.0 HQs or EQs for any non-carcinogens, generally will be considered not to pose a substantial present or potential hazard to human health and the environment and generally will not be listed as hazardous waste. Such waste streams fall into a category presumptively assumed not to pose sufficient risk as to require their listing as hazardous waste. However, even for these waste streams, in some cases, there can be factors that could mitigate the low hazard presumption. These also will be considered by the Agency in making a final determination. (5) Waste streams where the calculated high-end individual cancer-risk level is between 1×10^{-4} and 1×10^{-6} fall in the category for which there is a presumption of candidacy for either listing (risk > 10^{-5}) or no listing (risk < 10^{-5}). However, this presumption is not as strong as when risks are outside this range. Therefore, listing determinations for waste streams would always involve assessment of the additional factors discussed below. * * * Additional factors. b. The following factors will be considered in making listing determinations, particularly for wastes falling into the risk range between 1×10^{-4} and 1×10^{-6}. (1) Certainty of waste characterization; (2) Certainty in risk assessment methodology; (3) Coverage by other regulatory programs; (4) Waste volume; (5) Evidence of co-occurrence; (6) Damage cases showing actual impact to human health or the environment; (7) Presence of toxicant(s) of unknown or unquantifiable risk." *See* 59 FR 66075–66077, December 22, 1994.

B. Background on EPA's 2010 Risk Assessment

1. Human Health Risks

Individuals can be exposed to the constituents of concern found in CCRs through a number of exposure routes. Potential contaminant releases from landfills and surface impoundments include: leaching to ground water; overland transport from erosion and runoff; and air emissions. The potential of human exposure from any one of these exposure pathways for a particular chemical is dependent on the physical and chemical characteristics of the chemical, the properties of the waste stream, and the environmental setting. EPA has conducted a peer-reviewed risk assessment of potential human health risks from CCR constituents leaching to groundwater that subsequently migrate either to a nearby drinking water well, or to nearby surface water, and is ingested as drinking water or through fish consumption (U.S. EPA 2010a). EPA has also performed preliminary analyses of human health effects from CCR constituents that have eroded or have run off from CCR waste management units (U.S. EPA 2002), and of human health effects from breathing windblown particulate matter from CCR landfill disposal operations (the 1998 risk assessment and U.S. EPA 2010b).

Longstanding EPA policy is for EPA risk assessments to include a characterization of the risks at two points on a distribution (*i.e.,* range) of risk estimates: a central tendency estimate that represents conditions likely to be encountered in a typical exposure situation, and a high end estimate that represents conditions likely to be encountered by individuals with higher exposures (U.S. EPA 1995).[82] Examples of factors that would influence a nearby resident's exposure are the residence's distance from a CCR waste management unit, and an individual's behavior or activity patterns. In the 2010 risk assessment, the high end risk estimates are the 90th percentile estimates from a probabilistic analysis.

The comparisons that EPA used in this rule to judge whether either a high end or central tendency estimated risk

[82] *Guidance for Risk Characterization,* U.S. Environmental Protection Agency, 1995; accessible at *http://www.epa.gov/OSA/spc/pdfs/rcguide.pdf,* which states that "For the Agency's purposes, high end risk descriptors are plausible estimates of the individual risk for those persons at the upper end of the risk distribution," or conceptually, individuals with "exposure above about the 90th percentile of the population distribution". As suggested in the *Guidance,* we also provide 50th percentile results as the central tendency estimate of that risk distribution.

is of concern are the risk criteria discussed in the 1995 policy. As noted under that policy, for an individual's cancer risk, the risk criteria are in the range of 1×10^{-6}, or one in one million "excess" (above and beyond pre-existing risk) probability of developing cancer during a lifetime, to 1×10^{-4} (one in ten thousand),[83] with 1×10^{-5} (one in one hundred thousand) being the "point of departure" for listing a waste and subjecting it to regulation under subtitle C of RCRA.[84] For human non-cancer hazard, the risk criterion is an estimated exposure above the level at which no adverse health effects would be expected to occur (expressed as a ratio of the estimated exposure to the exposure at which it is likely that there would be no adverse health effects; this ratio is also called a hazard quotient (HQ), and a risk of concern equates to a HQ greater than one, or, in certain cases of drinking water exposure, water concentrations above the MCL established under the Safe Drinking Water Act.

The exposure pathways for humans that EPA has evaluated for CCR landfills and surface impoundments are nearby residents' groundwater ingestion and air inhalation, and fish consumption by recreational fishers.

2. Ecological Risks

For ecological non-cancer hazards that are modeled, the risk criterion is a hazard quotient that represents impacts on individual organisms, with a risk of concern being an estimated HQ greater than one. In some instances, EPA also considered documented evidence of ecological harm, such as field studies published in peer-reviewed scientific literature. Such evidence is often sufficient to determine adverse ecological effects in lieu of or in addition to modeling potential ecological risks.

Two types of exposures can occur for ecological receptors: exposures in which ecological receptors inhabit a waste management unit directly, and exposures in which CCRs or its chemical constituents migrate, or move, out of the waste management unit and contaminate nearby soil, surface water, or sediment.

C. Consideration of Individual Listing Criteria

CCRs contain the following Appendix VIII toxic constituents: antimony, arsenic, barium, beryllium, cadmium, chromium, lead, mercury, nickel, selenium, silver, and thallium. These Appendix VIII constituents are frequently found in CCRs, as has been reported by the U.S. EPA (1988, 1999, 2002, 2006, 2008, and 2010).[85] These are discussed below with respect to the factors outlined in § 261.11(a)(3)(i)–(xi), and the Agency's findings. In the following discussion of the eleven listing factors, we combined factors iii (Migration), iv (Persistence), v (Degradation) and vi (Bioaccumulation); and factors vii (Plausible Types of Mismanagement), viii (Quantities of the Waste Generated), and ix (Nature and Severity of Effects from Mismanagement) for a more lucid presentation of our arguments.

1. Toxicity—Factor (i)

Toxicity is considered in developing the health benchmarks used in risk assessment modeling. The Agency for Toxic Substances and Disease Registry (ATSDR) ToxFAQs,[86] the EPA Integrated Risk Information System (IRIS),[87] and the Toxicology Data Network (TOXNET) of the National Institutes of Health[88] are all sources of toxicological data on the Appendix VIII hazardous constituents found in CCRs. (The information from these data sources on the toxicity of the metals identified is included in the docket to today's proposed rule.) Two types of ingestion benchmarks are developed. For carcinogens, a cancer slope factor (CSF) is developed. A CSF is the slope of the curve representing the relationship between dose and cancer risk. It is used to calculate the probability that the toxic nature of a constituent ingested at a specific daily dose will cause cancer. For non-carcinogens, a reference dose (RfD) is developed. The RfD (expressed in units of mg of substance/kg body weight-day) is defined as an estimate (with uncertainty spanning perhaps an order of magnitude) of a daily exposure to the human population (including sensitive subgroups) that is likely to be without an appreciable risk of deleterious effects during a lifetime. The constituents of concern associated with CCRs include antimony, arsenic, barium, beryllium, cadmium, hexavalent chromium, lead, mercury, nickel, selenium, silver, and thallium. Based on the information in ASTDR's Tox FAQs, EPA's IRIS system and TOXNET, the Agency believes that the metals identified are sufficiently toxic that they are capable of posing a substantial present or potential hazard to human health and the environment when improperly treated, stored, transported disposed of, or otherwise managed. A brief summary of the toxic effects associated with these constituents is presented below, including for the four Appendix VIII hazardous constituents that were estimated in the draft groundwater risk assessment to pose high-end (90th percentile) risks at or above the risk criteria in one or more situations, and that were also found to present risk to human health in one or more damage cases (arsenic, cadmium, lead, and selenium):

Arsenic. Ingestion of arsenic has been shown to cause skin cancer and cancer in the liver, bladder and lungs.[89]

Antimony. Antimony is associated with altered glucose and cholesterol levels, myocardial effects, and spontaneous abortions. EPA has set a limit of 145 ppb in lakes and streams to protect human health from the harmful effects of antimony taken in through water and contaminated fish and shellfish.[90]

Barium. Barium has been found to potentially cause gastrointestinal disturbances and muscular weaknesses when people are exposed to it at levels above the EPA drinking water standards for relatively short periods of time.[91]

[83] *See* 40 CFR 300.430.

[84] As noted previously, EPA's hazardous waste listing determination policy is described in the notice of proposed rulemaking for wastes from the dye and pigment industries at 59 FR 66075–66077.

[85] Full references: U.S. EPA (Environmental Protection Agency). 1988. *Wastes from the Combustion of Coal by Electric Utility Power Plants—Report to Congress.* EPA–530–SW–88–002. U.S. EPA Office of Solid Waste and Emergency Response. Washington, DC. November.

U.S. EPA (Environmental Protection Agency). 1999. *Report to Congress: Wastes from the Combustion of Fossil Fuels—Volume II,* EPA 530–S–99–010. Office of Solid Waste. March.

U.S. EPA (Environmental Protection Agency). 2002. *Constituent Screening for Coal Combustion Wastes.* Draft Report prepared by Research Triangle Institute for Office of Solid Waste, Washington, DC. September.

U.S. EPA (Environmental Protection Agency). 2006. *Characterization of Mercury-Enriched Coal Combustion Residuals from Electric Utilities Using Enhanced Sorbents for Mercury Control.* EPA 600/R–06/008. Office of Research and Development. Research Triangle Park, NC. January.

U.S. EPA (Environmental Protection Agency). 2008. *Characterization of Coal Combustion Residuals from Electric Utilities Using Wet Scrubbers for Multi-Pollutant Control.* EPA/600/R–08/077. Report to U.S. EPA Office of Research and Development, Air Pollution Control Division. Research Triangle Park, NC. July.

U.S. EPA (Environmental Protection Agency). 2010. *Human and Ecological Risk Assessment of Coal Combustion Wastes.* Office of Resource Conservation and Recovery, Washington, DC. April.

[86] *http://www.atsdr.cdc.gov/toxfaq.html.*

[87] *http://cfpub.epa.gov/ncea/iris/index.cfm?fuseaction=iris.showSubstanceList&list_type=alpha&view=B.*

[88] *http://toxnet.nlm.nih.gov/cgi-bin/sis/htmlgen?HSDB.*

[89] ATSDR ToxFAQs. *Available at: http://www.atsdr.cdc.gov/toxfaq.html.*

[90] *Ibid.*

[91] *Ibid.*

Beryllium. Beryllium can be harmful if you breathe it. If beryllium air levels are high enough (greater than 1,000 ug/m^3), an acute condition can result. This condition resembles pneumonia and is called acute beryllium disease.[92]

Cadmium and Lead. Cadmium and lead have the following effects: kidney disease, lung disease, fragile bone, decreased nervous system function, high blood pressure, and anemia.[93]

Hexavalent Chromium. Hexavalent chromium has been shown to cause lung cancer when inhaled.[94]

Mercury. Exposure to high levels of metallic, inorganic, or organic mercury can permanently damage the brain, kidneys, and developing fetus.[95]

Nickel. The most common harmful health effect of nickel in humans is an allergic reaction. Approximately 10–20% of the population is sensitive to nickel. The most common reaction is a skin rash at the site of contact. Less frequently, some people who are sensitive to nickel have asthma attacks following exposure to nickel. Some sensitized people react when they consume food or water containing nickel or breathe dust containing it.[96]

Selenium. Selenium is associated with selenosis.[97]

Silver. Exposure to high levels of silver for a long period of time may result in a condition called arygria, a blue-gray discoloration of the skin and other body tissues.[98]

Thallium. Thallium exposure is associated with hair loss, as well as nervous and reproductive system damage.[99]

2. Concentration of Constituents in Waste—Factor (ii)

A CCR constituent database was developed for the Regulatory Determination in May 2000 and in followup work leading to today's co-proposal. This database contained data on the total CCR constituents listed above, as well as many others, with the Appendix VIII constituents found in varying concentrations (*see* Table 6).[100]

TABLE 6—TOTAL METALS CONCENTRATIONS FOUND IN CCRS

[ppm]

Constituent	Mean	Minimum	Maximum
Antimony	6.32	0.00125	3100
Arsenic	24.7	0.00394	773
Barium	246.75	0.002	7230
Beryllium	2.8	0.025	31
Cadmium	1.05	0.000115	760.25
Chromium	27.8	0.005	5970
Lead	25	0.0074	1453
Mercury	0.18	0.000035	384.2
Nickel	32	0.0025	54055
Selenium	2.4075	0.0002	673
Silver	0.6965	0	3800
Thallium	1.75	0.09	100

The data in Table 6 show that many of these metals are contained in CCRs at relatively high concentrations, such that if CCRs were improperly managed, they could leach out and pose a substantial present or potential hazard to human health or the environment when improperly treated, stored, transported or disposed of or otherwise managed. The risk assessment that was conducted confirms this finding, as do the many damage cases that have been documented and presented in today's co-proposal, including documents contained in the docket to today's proposed rule.

3. Migration, Persistence, Degradation, and Bioaccumulation—Factors (iii), (iv), (v), and (vi)

The potential of the hazardous constituents and any degradation products to migrate, persist, degrade and/or bioaccumulate in the environment are all factors that EPA considered and evaluated in the design of the fate and transport models that were used in assessing the concentrations of the toxic constituents to which humans and ecological receptors may be exposed. However, before discussing the hazardous constituents in the fate and transport models, the Agency would note that the toxic constituents for CCRs are all toxic metals—antimony, arsenic, barium, beryllium, cadmium, chromium, lead, mercury, nickel, selenium, silver and thallium, which do not decompose or degrade with the passage of time. Thus, these toxic metals will persist in the environment for very long periods of time, and if they escape from the disposal site, will continue to provide a potential source of long-term contamination.

The purpose of the risk assessment was to use the fate and transport models to assess likely migration of the CCR toxic constituents from different waste types through different exposure pathways, to receptors and to predict whether CCRs under different management scenarios may produce risks to human health and the environment. To estimate the risks posed by the management of CCRs in landfills and surface impoundments, the risk assessment estimated the release of the CCR toxic constituents from landfills and surface impoundments, the concentrations of these constituents in environmental media surrounding coal-fired utility power plants, and the risks that these concentrations pose to human and ecological receptors. The risk estimates were based on a groundwater fate and transport model in which constituents leached to groundwater consumed as drinking water, migrated to surface water and bioaccumulated in recreationally caught and consumed fish, and on direct ecological exposure. The specific 50th and 90th percentile risk assessment results for relevant Appendix VIII constituents are discussed below. While these results are based on a subset of CCR disposal units, they are likely representative of the risks posed by other similar disposal units. As discussed previously, the risk

[92] *Ibid.*

[93] *Ibid.*

[94] *Ibid.*

[95] *Ibid.*

[96] *Ibid.*

[97] *Ibid.*

[98] *Ibid.*

[99] *Ibid.*

[100] Additional data on the waste characteristics of fly ash and FGD are presented in section I.F.2.

assessment demonstrates that if CCRs are improperly managed, they have the potential to present a hazard to human health and the environment above a 1×10^{-4} to 1×10^{-6} cancer range or an HQ of 1. A detailed discussion of the modeling and risks from this pathway can be found in U.S. EPA 2009a (available in the docket for this proposal). This report presents the methodology, results, and uncertainties of EPA's assessment of human health risks resulting from groundwater contamination from coal-fired electric utilities.

Ingestion of Groundwater: The risk assessment predicted that CCRs pose an estimated trivalent arsenic cancer risk of 4 in 10,000 for unlined landfills and 2 in 10,000 for clay-lined landfills at the 90th percentile. No cancer risks above 1 in 100,000 were found at the 50th percentile. The 90th percentile results also estimated that thallium is ingested at three times the reference dose and antimony at twice the reference dose for unlined landfills. For clay-lined landfills, only thallium is estimated to exceed the reference dose, with a 90th percentile ingestion of twice the reference dose.

CCRs co-managed with coal refuse in landfills are estimated to pose arsenic cancer risks of 5 in 10,000 for an unlined landfill and 2 in 10,000 for a clay-lined landfill at the 90th percentile. EPA estimates that arsenic poses a 2 in 100,000 risk of cancer at the 50th percentile for unlined landfills, but poses cancer risks of less than 1 in 100,000 for clay or composite-lined landfills. For CCRs co-managed with coal refule, thallium is estimated at two times the reference dose in unlined landfills at the 90th percentile, but did not exceed the reference dose at the 0th percentile for any liner type.

For unlined landfills managing FBC waste, arsenic is estimated to have a cancer risk of three in one hundred thousand at the 90th percentile. For clay-lined landfills managing FBC waste, arsenic is estimated to have a cancer risk of six in one hundred thousand at the 90th percentile, while thallium is estimated to have an HQ of 4, and antimony is estimated to have an HQ of 3.

The Appendix VIII constituents in CCRs managed in landfills are not all estimated to arrive at the drinking water well at the same time. For unlined landfills, the median number of years until peak well water concentrations are estimated to occur is approximately 2,800 to 9,700 years for arsenic, 2,600 to 10,000 years for selenium, and 2,300 years for thallium. For clay-lined landfills, the median estimated time until peak well concentrations is approximately 4,000 to 10,000 years for arsenic, 5,100 to more than 10,000 years for selenium, and 4,300 years for thallium. Of the contaminated groundwater plumes that are estimated to reach the receptor wells from composite-lined units, the median time to peak well concentration as not estimated to sour in the 10,000 year time period that was modeled.[101]

For surface impoundments, the risk estimates differ. CCRs managed alone, that is, without coal refuse in the same impoundment, are found to pose an arsenic cancer risk of 2 in 1,000 for unlined surface impoundments and 9 in 10,000 for clay-lined surface impoundments at the 90th percentile. For unlined surface impoundments at the 90th percentile, selenium's HQ is two and lead's is three. At the 50th percentile, none of the constituents assessed for non-cancer effects exceed their reference dose in any scenario, but arsenic did pose estimated cancer risks of 1 in 10,000 and 6 in 100,000 for unlined and clay-lined units, respectively. For the surface impoundments with composite liners, arsenic did not exceed cancer risks of 1 in 100,000, nor did selenium exceed its reference dose.

Co-disposed CCRs and coal refuse managed in surface impoundments resulted in the highest risks. For the 90th percentile, arsenic's estimated cancer risk is 2 in 100 and 7 in 1,000 for unlined and clay-lined surface impoundments, respectively.[102] At the 50th percentile, these units still resulted in estimated arsenic cancer risks of 6 in 10,000 for the unlined surface impoundment and 2 in 10,000 for the clay-lined surface impoundment. Cadmium and lead both are estimated to exceed the reference dose by nine times at the 90th percentile for unlined surface impoundments. In clay-lined surface impoundments, cadmium has an estimated cadmium HQ of 3. When managed in surface impoundments with composite liners, these constituents' estimated cancer risks did not exceed 1 in 100,000, nor are they estimated to exceed their reference doses.

As with landfills, the modeling shows differing arrival times of various constituents at the modeled well locations. Due to differences in behaviors when interacting in soil, some chemical constituents move more quickly than others through the subsurface environment. For unlined surface impoundments, the median number of years until peak well water concentrations would occur is estimated to be 74 years for hexavalent selenium and 78 years for arsenic. For clay-lined surface impoundments, the median number of years was estimated to be 90 years for hexavalent selenium and 110 years for trivalent arsenic. Of the plumes that did reach the receptor wells from composite-lined units,[103] the median number of years was estimated to be 4,600 years for hexavalent selenium and 8,600 years for trivalent arsenic.

While hexavalent chromium, and nickel were not modeled using the fate and transport models, they did show the potential for excess risk at the screening stage.[104] Risk attenuation factors were developed for each of these constituents at the 50th and 10th percentiles. Here, attenuation refers to the dilution of the concentration of a constituent. Thus, the 10th percentile (not the 90th percentile) was developed to represent the high-end risks. These risk attenuation factors were calculated by dividing the screening risk results by the full-scale risk results, across all unit types combined, for the constituents modeled in the full-scale assessment. Using the risk attenuation factors, none of the constituents were estimated to exceed an HQ of 1 at either the 50th or 10th percentile for landfills. For surface impoundments, hexavalent chromium was estimated to exceed an HQ of 1 at the 50th percentile, while hexavalent chromium was estimated to exceed an HQ of 1 at the 10th percentile. The HQ for nickel under the surface

[101] The risk model used by EPA evaluates conditions over a 10,000 year period, and considers constituent concentrations during that period. In some cases, peak concentrations do not occur during the 10,000 year period.

[102] Including data with very high leach levels in surface impoundments where pyritic wastes were managed. As mentioned earlier, management of CCRs with coal refuse may have changed, and some pore water data from the coal refuse may not represent the management of these materials today. EPA has solicited comments on these issues.

[103] In other words, based on the results from this subset of the total number of Monte Carlo realizations.

[104] Previous risk assessment results for CCR (U.S. EPA, 1998) indicated concern for the groundwater pathway and limited concern for aboveground pathways for human and ecological receptors. The primary purpose of subsequent risk analyses was to update those results by incorporating new waste characterization data received since 1998 and by applying current data and methodologies to the risk analyses. The initial step in this process is screening and constituent selection for a more detailed analysis. The goal of screening is to identify CCR constituents, waste types, receptors, and exposure pathways with risks below the level of concern and eliminate those combinations from further analysis. The screening analysis (U.S. EPA, 2002) compared the 90th percentile leachate values directly to the human health benchmarks identified above. In other words, it was assumed that a human receptor was drinking leachate directly from a CCR landfill or surface impoundment with no attenuation or variation in exposure.

impoundment scenario was less than 1 using the 50th and 10th percentile values. However, the use of risk attenuation factors in place of probabilistic fate and transport modeling increases the uncertainty associated with these results. This analysis was conducted only for the drinking water exposure pathway.

Consumption of Recreationally Caught Fish: For the unlined, clay-lined, or composite-lined landfills, none of the modeled Appendix VIII hazardous constituents posed a cancer risk greater than 1 in 100,000, nor did they exceed their reference doses. However, for surface impoundments co-disposing of CCRs with coal refuse, trivalent arsenic's 90th percentile estimates are 3 in 100,000 and 2 in 100,000 excess cancer risk for unlined and clay-lined units, respectively. Pentavalent arsenic's 90th percentile estimate is 2 in 100,000 excess cancer risk for unlined impoundments. For all other liner and management unit scenarios at the 90th percentile, and all scenarios at the 50th percentile, there were no arsenic cancer risks above 1 in 100,000. Hexavalent selenium is estimated to result in exposures at three times the reference dose and twice the reference dose in the unlined and clay-lined surface impoundment scenarios, respectively, at the 90th percentile. However, selenium is not estimated to exceed the reference dose in the composite lined scenario at the 90th percentile, or any scenario at the 50th percentile.

Particulate Matter Inhalation: Air emissions from CCR disposal and storage sites can originate from waste unloading operations, spreading and compacting operations, the re-suspension of particulates from vehicular traffic, and from wind erosion. Air inhalation exposures may cause adverse human health effects, either due to inhalation of small-diameter (less than 10 microns) "respirable" particulate matter that causes adverse effects (PM_{10} and smaller particles which penetrate to and potentially deposit in the thoracic regions of the respiratory tract), which particles are associated with a host of cardio and pulmonary mortality and morbidity effects. *See e.g.* 71 FR at 61151–62 and 61178–85 (Oct. 6, 2006); *see* also 40 CFR 50.6 and 50.13 (National Ambient Air Quality Standards for thoracic coarse particles and fine particles).

To evaluate the potential exposure of residents to particulate matter that live near landfills that have disposed of CCRs, EPA has performed a screening-level analysis using the SCREEN3 model. This analysis, in *Inhalation of Fugitive Dust: A Screening Assessment of the Risks Posed by Coal Combustion Waste Landfills—DRAFT* (U.S. EPA 2010b, copy of which is in the docket for this proposed rule), indicates that, without fugitive dust controls, there could be exceedances of the National Ambient Air Quality Standards (NAAQS) for fine particulate matter in the air at residences near CCR landfills. EPA requests comment and data on the screening analysis, on the results of any ambient air monitoring for particulate matter that has been conducted, where air monitoring stations are located near CCR landfills, along with information on any techniques, such as wetting, compaction, or daily cover that may be employed to reduce such exposures.

A description of the modeling and risks from this pathway for disposal of CCRs in landfills and surface impoundments can be found in the Draft Final Report: Non-ground Water Pathways, Human Health and Ecological Risk Analysis for Fossil Fuel Combustion Phase 2 (FFC2); June 5, 1998.[105] This analysis did not address the issue of enrichment of toxic constituents present in the finer, inhalable fraction of the overall particulate matter size distribution,[106] but used the total constituent concentrations to represent the concentrations of constituents present on the inhaled particulate matter. Based on the analysis, at landfills, the highest estimated risk value was an individual excess lifetime risk of 4 in one million for the farmer, due to inhalation of chromium (all chromium present in the particulate matter was assumed to be in the more toxic, hexavalent form). For surface impoundments, the highest risk value was 2 in one million for the farmer (again assuming all chromium present was hexavalent). The Agency requests comment on the analysis, as presented in the draft final report, as well as any data, including air monitoring data that may be available regarding the potential for residents to be exposed to toxic constituents by this exposure pathway.

Ecological Exposure: Where species were directly exposed to surface impoundments, the risk assessment found ecological risks due to selenium, silver, nickel, chromium, arsenic, cadmium, barium, lead, and mercury. For scenarios where species were exposed to constituents that had migrated from the groundwater to surface water and sediment, ecological risk exceedances were found for lead, selenium, arsenic, barium, antimony, and cadmium at the 90th percentile, but not at the 50th percentile. EPA's risk assessment, confirmed by the existing damage cases and field studies published in the peer-reviewed scientific literature, show elevated selenium levels in migratory birds, and elevated contaminant levels in mammals as a result of environmental uptake, fish deformities, and inhibited fish reproductive capacity. Because of the large size of these management units, many being 100's of acres to one that is about 2,600 acres, receptors can often inhabit these waste management units. There are a number of recent references in the peer-reviewed scientific literature specific to CCRs managed in surface impoundments that confirm the 1998 risk assessment results and provide additional pertinent information of potential ecological damage. Hopkins, et al. (2006)[107] observed deformities and reproductive effects in amphibians living on or near CCR disposal sites in Georgia. Rowe, et al. (2002)[108] provided a thorough review of laboratory and field studies that relate to the impact of CCR surface impoundment management practices' on aquatic organisms and communities. Examples of studies cited in Rowe, et al. (2002) that illustrates the impact of CCRs on aquatic organisms in direct contact with surface impoundment waters and/or sediments include Benson and Birge (1985),[109] Coutant, et al. (1978)[110] and Rowe, et al. (2001),[111] while examples of studies cited in Rowe, et al. 2002 that illustrates the impact of CCRs on aquatic organisms in water bodies near CCR surface

[105] *http://www.epa.gov/epawaste/nonhaz/industrial/special/fossil/ngwrsk1.pdf.*

[106] *See,* for example, Vouk, V. and Piver, W. "Metallic Elements in Fossil Fuel Combustion Products: Amounts and Form of Emissions and Evaluation of Carcinogenicity and Mutagenicity." Env Health Perspec 1983:47(201–225).

[107] Hopkins, W.A., S.E. DuRant, B.P. Staub, C.L. Rowe, and B.P. Jackson. 2006. Reproduction, embryonic development, and maternal transfer of contaminants in the amphibian Gastrophryne carolinensis. *Environmental Health Perspectives.* 114(5):661–666.

[108] Rowe, C., Hopkins, W., Congdon, G. "Ecotoxicological Implications of Aquatic Disposal of Coal Combustion Residuals in the United States: A Review." Env Monit Assess 2002: 80(270–276).

[109] Benson, W. and Birge, W. "Heavy metal tolerance and metallothionein induction in fathead minnows: results from field and laboratory investigations." Environ Toxicol Chem 1985:4(209–217).

[110] Coutant, C., Wasserman, C., Chung, M., Rubin, D., Manning, M. "Chemistry and biological hazard of a coal-ash seepage stream." J. Water Poll. Control Fed. 1978:50(757–743).

[111] Rowe C., Hopkins, W., and Coffman, V. "Failed recruitment of southern toads (Bufo terrestris) in a trace-element contaminated breeding habitat: direct and indirect effects that may lead to a local population sink." Arch. Environ. Contam. Toxicol. 2001:40(399–405).

impoundments include Lemly (1993),[112] Sorensen, et al. (1982) [113] and (1988).[114] This latter category may reflect CCR impacts attributable to three constituent migration mechanisms: (1) NPDES-permitted discharges from impoundments; (2) overtopping of impoundments; and (3) groundwater-to-surface-water discharges (modeled in US EPA 2010a), as well as other, non-CCR-related, sources of pollutants.

Although chromium, beryllium, and silver were not modeled, they were analyzed using dilution attenuation factors developed for the 50th and 10th percentiles in the same manner as described above. The only exceedance of the HQ of 1 was for silver at the 10th percentile under the landfill scenario. The only exceedances of the ecological criteria for surface impoundments of the 40 CFR part 261 Appendix VIII constituents was for chromium at the 10th percentile. Since full-scale modeling was not conducted, the results for these constituents are uncertain.

4. Plausible Types of Mismanagement, Quantities of the Waste Generated, Nature and Severity of Effects From Mismanagement—Factors (vii), (viii) and (ix)

As discussed earlier, approximately 46 million tons of CCRs were managed in calendar year 2008 in landfills (34%) and nearly 29.4 million tons were managed in surface impoundments (22%).[115] EPA has estimated that in 2004, 69% of the CCR landfills and 38% of the CCR surface impoundments had liners. As shown in the risk assessment and damage cases, the disposal of CCRs into unlined landfills and surface impoundments is likely to pose significant risks to human health and the environment. Additionally, documented damage cases have helped to confirm the actuality and magnitude of risks posed by these unlined disposal units.

The CCR waste stream is generated in very large volumes and is increasing. The ACAA estimates that the production of CCRs has increased steadily from approximately 30 million tons in the 1960s to over 120 million tons in the 2000s.[116] A recent ACAA survey estimates a total CCR production of just over 136 million tons in 2008.[117] This is a substantially large waste stream when compared to the 6.9 million tons of non-wastewater hazardous wastes disposed by all other sectors in 2007, and the 2 million tons of hazardous waste being reported as disposed of in landfills and surface impoundments in 2005.[118]

EPA currently has documented evidence of proven damages to groundwater and surface water from 27 disposal sites and potential damages at 40 sites which are discussed in detail above and in the Appendix to this proposal. The damage cases resulting from CCR constituents migrating into groundwater were generally the same with those predicted in the risk assessment with respect to constituents which migrated, the concentrations reaching receptors, and the consequent magnitude of risk to those receptors. Of the constituents in Appendix VIII of Part 261, four were found at levels of concern in both the risk assessment and the damage cases (arsenic, cadmium, lead, and selenium). Two additional Appendix VIII (Part 261) constituents (chromium and nickel) were found in damage cases, and showed the potential for risk in the risk assessment, but were not modeled through fate and transport modeling. Finally, there were two Appendix VIII (Part 261) constituents (antimony and thallium) that were projected to be capable of migrating and reaching receptors at levels of concern in the risk assessment, but have yet to be identified in any of our groundwater damage cases.[119]

The damages to surface water from Appendix VIII (Part 261) constituents do not reflect a ground water to surface water pathway, but rather reflect surface water discharges. Five damage cases resulted in selenium fish consumption advisories consistent with the risk assessment's prediction that selenium consumption from fish in water bodies affected by CCR disposal units would result in excess ecologic and human health risk. We are aware that at least three of the fish advisories were subsequently rescinded when the criteria was reassessed and revised. The risk assessment also predicts that arsenic would pose such risks. However, while no arsenic fish advisories have been linked to CCR disposal at this time, the risk assessment predicts that selenium will migrate faster than arsenic.

In addition to the impacts on human health from groundwater and surface water contaminated by CCR released from disposal units, the damage cases have also shown the following adverse effects to plants and wildlife: Elevated selenium levels in migratory birds, wetland vegetative damage, fish kills, amphibian deformities, snake metabolic effects, plant toxicity, mammal uptake, fish deformities, and inhibited fish reproductive capacity. Although these effects cannot easily be linked to the results of the risk assessment as was done for groundwater and surface water above, the risk assessment generally agreed with the damage cases because it sometimes showed very high risks to ecological receptors. For additional information on ecological damages, *see* the document titled "What Are the Environmental and Health Effects Associated with Disposing of CCRs in Landfills and Surface Impoundments?" in the docket to this proposal.

Furthermore, four of the 27 proven damage case disposal sites have been listed on the EPA's National Priorities List (NPL). The NPL is the list of national priority sites with known releases or threatened releases of hazardous substances, pollutants, or contaminants throughout the United States and its territories. The Hazard Ranking System (HRS), the scoring system EPA uses to assess the relative threat associated with a release from a site, is the primary method used to determine whether a site should be placed on the NPL.[120] The HRS takes into account the three elements of environmental and human health risk: (1) Probability of release; (2) exposure; and (3) toxicity. EPA generally will list sites with scores of 28.5 or above. The HRS is a proven tool for evaluating and prioritizing the releases that may pose threats to human health and the environment throughout the nation.

[112] Lemly A., "Guidelines for evaluating selenium data from aquatic monitoring and assessment studies." Environ. Monit. Assess. 1993:28(83–100).

[113] Sorensen, E., Bauer, T., Bell, J., Harlan, C. "Selenium accumulation and cytotoxicity in teleosts following chronic, environmental exposure." Bull. Environ. Contam. Toxicol. 1982:29(688–696).

[114] Sorenson, E. "Selenium accumulation, reproductive status, and histopathological changes in environmentally exposed redear sunfish." Arch Toxicol 1988:61(324–329).

[115] Estimated from the 2009 ACAA survey and Energy Information Administration 2005 F767 Power Plant database.

[116] ACAA (American Coal Ash Association). 2008. Production & Use Chart (1966–2007). *http://www.acaa-usa.org/associations/8003/files/Revised_1966_2007_CCP_Prod_v_Use_Chart.pdf.*

[117] ACAA (American Coal Ash Association). 2009. *2008 Coal Combustion Product (CCP) Production & Use Survey Results. http://www.acaa-usa.org/associations/8003/files/2007_ACAA_CCP_Survey_Report_Form%2809-15-08%29.pdf.*

[118] The National Biennial RCRA Hazardous Waste Report (2007) available at *http://www.epa.gov/epawaste/inforesources/data/br07/national07.pdf.*

[119] While this could indicate a potential conservatism in the model with respect to these two constituents, it is more likely to result from a failure to sample for these constituents as frequently. This is consistent with the data reported in Table 4–29 of the revised risk assessment (only 11 samples taken for antimony and thallium in surface impoundments versus hundreds for various other constituents).

[120] U.S. EPA 2007. "Introduction to the Hazard Ranking System (HRS)." Accessed at: *http://www.epa.gov/superfund/programs/npl_hrs/hrsint.htm.*

Whereas each of those 4 NPL sites also contains waste other than CCRs, CCRs are one of the prevalent waste types in each case.[121]

In addition, the Kingston, Tennessee damage case (*see* the Appendix) helps to illustrate the additional threats to human health and the environment that can be caused by the failure of a CCR waste management unit. At TVA's Kingston facility, there were four failure conditions: The presence of an unusually weak fly ash ("Slimes") foundation; the fill geometry and setbacks; increased loads due to higher fill; and hydraulically placed loose wet ash. If owners or operators do not maintain due diligence regarding the structural integrity of surface impoundments, significant damage to human health and the environment could be a likely outcome. In summary, while the preponderance of documented damage cases were the result of releases from unlined landfills and surface impoundments, EPA believes that the above data identify situations (*e.g.,* adverse impacts on migratory birds) illustrative of potential problems occurring from the management of CCRs in any type of surface impoundment.

5. Action Taken by Other Governmental Agencies or Regulatory Programs Based on the Health or Environmental Hazard Posed by the Waste or Waste Constituent—Factor (x)

As a result of the mismanagement of CCRs, EPA and states have taken steps to compel cleanup in several situations. Specifically, in addition to EPA placing sites on the NPL due to the disposal or indiscriminant placement of CCRs, at least 12 states have issued administrative orders for corrective actions at CCR disposal sites. Corrective action measures at these CCR management units vary depending on the site specific circumstances and include formal closure of the unit, capping, re-grading of ash and the installation of liners over the ash, ground water treatment, groundwater monitoring, and combinations of these measures.

6. Other Factors—Factor (xi)

The damage cases and the risk assessment also found excess risks for human and ecological receptors that resulted from non-Appendix VIII (Part 261) constituents.[122] While not currently identified under RCRA as hazardous or toxic constituents, several of these constituents have the same toxic endpoints as the Appendix VIII (Part 261) constituents found in CCRs, while nitrate is associated with pregnancy complications and methemoglobinemia (blue baby syndrome).[123] Although these non-Appendix VIII (Part 261) constituents do not provide an independent basis for listing CCRs, EPA finds their presence in the damage cases and risk assessment results to be relevant to the listing decision because of the potential to cause additive or synergistic effects to the Appendix VIII constituents. For instance, exposure to high levels of cobalt (cobalt has an HQ of 500 when rounded to 1 significant digit) can result in lung and heart effects, the same endpoints as exposure to high levels of antimony. Thus, these two constituents could act additively or synergistically on both the heart and lungs. The risk assessment showed 90th percentile cobalt drinking water ingestion to be 500 times the reference dose. Thus, cobalt could exacerbate the heart and lung effects due to CCR antimony exposures.

Therefore, based on our examination of CCRs against the criteria for listing, a listing determination for CCRs destined for disposal can be based on such factors as (1) The continued evidence that CCRs in landfills and surface impoundments may not be properly managed—*e.g.,* the lack of groundwater monitoring for many existing units; (2) the continued gaps in some state regulations; (3) the damage cases we have documented to date, including the damage done by the recent catastrophic release of CCRs from the impoundment failure in Kingston, Tennessee; and (4) the results of the risk assessment, which indicates high-end risks associated with disposal of CCRs in unlined and clay-lined CCR landfills and surface impoundments far exceeding acceptable levels (*e.g.,* exceeding a cancer risk threshold of 1×10^{-5})[124] and the non-cancer risk threshold (HQ greater than 1).

VI. Summary of the Co-Proposed Subtitle C Regulations

Under the subtitle C alternative, EPA would list CCRs from electric utilities and independent power producers intended for disposal in landfills and surface impoundments as a special waste, which would make them subject to the existing subtitle C regulations at 40 CFR parts 260 through 268, as well as the permitting requirements in 40 CFR part 270, and the state authorization process in 40 CFR parts 271–272.[125] These regulations establish, among other things, location restrictions; standards for liners, leachate collection and removal systems, and groundwater monitoring for land disposal units; fugitive dust control; closure and post-closure care requirements; storage requirements; corrective action; financial assurance; waste characterization; and permitting requirements. These regulations also impose requirements on generators and transporters of CCRs destined for disposal, including manifesting (if the CCRs destined for disposal are sent off site). As discussed in detail in section IV. E of today's preamble, EPA is proposing to leave the Bevill determination in place for CCRs used beneficially. Thus, CCRs beneficially used would not be subject to regulation from the point of generation or from the point they are recovered from landfills or surface impoundments, to the point where they are used beneficially. In addition, when beneficially used (*e.g.,* in wallboard and concrete), the CCRs become part of a new product; these products do not carry the special waste listing. When these products reach the end of their useful life and are to be disposed of, this represents a new point of generation. This new waste would be subject to RCRA subtitle C if the waste exhibits a characteristic of hazardous waste (*i.e.,* ignitability, corrosivity, reactivity, or toxicity).

In the majority of cases, EPA is proposing that CCRs be subject to the existing subtitle C requirements without modification. Accordingly, for those regulatory requirements that we propose not to modify or for which EPA does not specifically solicit comment, EPA is not proposing to reopen any aspect of those requirements, and will not respond to any unsolicited comments submitted during this rulemaking. However, where EPA has determined that special

[121] For specifics, please *see http://www.regulations.gov/fdmspublic/component/main?main=DocumentDetail&d=EPA-HQ-RCRA-2006-0796-0015.*

[122] Aluminum, boron, chloride, cobalt, copper, fluoride, iron, lithium, manganese, molybdenum, nitrate/nitrite, strontium, sulfate, vanadium, and zinc.

[123] ATSDR CSEM. Available at: *http://www.atsdr.cdc.gov/csem/nitrate/no3physiologic_effects.html.*

[124] This risk level is consistent with those discussed in EPA's hazardous waste listing determination policy (see the discussion in a proposed listing for wastes from the dye and pigment industries, December 22, 1994; 59 FR 66072).

[125] As discussed in section VI. D of the preamble, as part of the proposal to list CCRs as a special waste, as is done routinely with listed wastes, EPA is also proposing to subject CCRs that are disposed of to the notification requirements under CERCLA at 40 CFR part 302.

characteristics of these wastes warrant changes; *e.g.,* where implementation of existing requirements would present practical difficulties, or where additional requirements are necessary due to the special characteristics of these wastes, EPA is proposing to revise the requirements to account for these considerations. For example, EPA is proposing tailored design criteria for new CCR disposal units, pursuant to its authority under section 3004(x) of RCRA.[126] Similarly, under the authority of section 3004(x) of RCRA, EPA is proposing to modify the CCR landfill and surface impoundment liner and leak detection system requirements and the effective dates for the land disposal restrictions, and the surface impoundment retrofit requirements. EPA is also proposing to establish new land disposal prohibitions and treatment standards for both wastewater and non-wastewater CCRs. In addition, to address dam safety and stability issues, EPA is proposing design and inspection requirements for surface impoundments, similar to those of the Mine Safety and Health Administration (MSHA) design requirements for slurry impoundments at 30 CFR part 77.216 for surface impoundments. Further, EPA is proposing that all existing surface impoundments that have not closed in accordance with the rule's requirements by the effective date of this rule would be subject to all of the requirements of this rule, including the need to obtain a permit, irrespective of whether the unit continues to receive CCRs or the facility otherwise engages in the active management of those units.

Finally, we would note that if the Agency concludes to reverse the Bevill determinations and list CCRs as a special waste, EPA would make in any final rule conforming changes to 40 CFR parts 260 through 268 and 270 through 272 so that it is clear that these requirements apply to all facilities regulated under the authority of RCRA subtitle C that generate, transport, treat, store, or dispose of special wastes as well as to those facilities that generate, treat, store, or dispose of special wastes.

The following paragraphs set out the details of this subtitle C proposal, with the modified or new requirement discussed in Section B. and the existing subtitle C requirements discussed in Section C.

A. Special Waste Listing

Under this regulatory option, EPA is proposing to list CCRs generated by electric utilities and independent power producers destined for disposal as a special waste subject to the requirements of RCRA subtitle C by amending 40 CFR part 261 and to add Subpart F—Special Wastes Subject to Subtitle C Regulations. The Agency believes this would be the appropriate manner for listing these wastes, and, as discussed in detail later in this section, the Agency believes that listing CCRs destined for disposal as a special waste, rather than a hazardous waste could, in large measure, address potential issues of stigma.

B. Proposed Special Requirements for CCRs

The following paragraphs discuss the special requirements the Agency is proposing for CCRs. These requirements modify or are in addition to the general subtitle C requirements found at 40 CFR parts 264–268 and 270–272.

1. Modification of Technical Standards Under 3004(x)

Section 3004(x) of RCRA authorizes the Administrator to modify the statutory requirements of sections 3004(c), (d), (e), (f), (g), (o), (u), and 3005(j) of RCRA in the case of landfills or surface impoundments receiving Bevill wastes, including CCRs that EPA determines to regulate under subtitle C, to take into account the special characteristics of the wastes, the practical difficulties associated with implementation of such requirements, and site-specific characteristics, including, but not limited to the climate, geology, hydrology and soil chemistry at the site, so long as such modified requirements assure protection of human health and the environment. The Agency is proposing to modify, through its authority under RCRA 3004(x), the CCR landfill and surface impoundment liner and leak detection system requirements, the effective dates for the land disposal restrictions, and the surface impoundment retrofit requirements.

i. Modification of CCR Landfills and Surface Impoundments From the Section 3004(o) Liner and Leak Detection Requirements

The minimum technological requirements set out in RCRA Section 3004(o)(1)(A)(i) requires that new hazardous waste landfills and surface impoundments, replacements of existing landfills and impoundments, and lateral expansions of existing landfills and impoundments,[127] to install two or more liners and a leachate collection and removal system above (in the case of a landfill) and between such liners. Section 3004(o)(4)(A) also requires these units to install a leak detection system. Landfills and surface impoundments covered under the regulations at 40 CFR part 264 are required to have a double liner system, and a leachate collection and removal system that can also serve as a leak detection system as described in 40 CFR sections 264.221 and 264.301. Under section 3005 (j)(1) (and, as explained below, effectively under section 3005 (j)(11) as well), existing surface impoundments are required to meet all of these requirements as well.

EPA is proposing to modify the double liner and leachate collection and removal system requirement by substituting a requirement to install a composite liner and leachate collection and removal system. As modeled in EPA's risk assessment, composite liners effectively reduce risks from all constituents to below the risk criteria for both landfills and surface impoundments. Therefore, the Agency believes a composite liner system would be adequately protective of human health and the environment and a double liner system would be unnecessarily burdensome. The modified standards specify a composite liner system that consists of two components: the upper component must consist of a minimum 30-mil flexible membrane liner (FML), and the lower component must consist of at least a two-foot layer of compacted soil with a hydraulic conductivity of no more than 1×10^{-7} cm/sec. FML components consisting of high density polyethylene (HDPE) shall be at least 60-mil thick. The FML component must be installed in direct and uniform contact with the compacted soil component. The leachate collection system must be designed and constructed to maintain less than a 30-cm depth of leachate over the liner.

[126] Section 3004(x) of RCRA provides EPA the authority to modify certain statutory provision (i.e., 3004(c), (d), (e), (f), (g), (o), and (u) and 3005(j) taking into account the special characteristics of such wastes, the practical difficulties associated with implementation of such requirements, and site-specific characteristics, including, but not limited to, climate, geology, hydrology, and soil chemistry at the site, so long as such modified requirements are protective of human health and the environment.

[127] Replacement unit means a landfill, surface impoundment, or waste pile unit (1) from which all or substantially all of the waste is removed, and (2) that is subsequently reused to treat, store, or dispose of such waste. "Replacement unit" does not apply to a unit from which waste is removed during closure, if the subsequent reuse solely involves the disposal of waste from that unit and other closing units or corrective action areas at the facility, in accordance with an approved closure plan or EPA or State approved corrective action. Lateral expansion means a horizontal expansion of the waste boundaries of an existing landfill or surface impoundment.

EPA has concluded that these liner and leachate collection requirements will be protective of human health and the environment from the release of contaminants to groundwater from CCRs in landfills and surface impoundments. Specifically, the risk assessment indicates that risks from disposal units with composite liners will be less than the 1×10^{-5} for carcinogens and less than an HQ of one for other hazardous constituents—levels that EPA has considered protective for the management of hazardous wastes. (The results of EPA's risk analyses are discussed in section II.B, and in the full risk assessment document, which is in the docket for today's proposed rulemaking.) Further support is provided by the damage cases, as none of the proven damage cases involved lined landfills or surface impoundments (with the possible exception of one unit, which in any case did not have a composite liner). In addition, the proposed modified requirements are the design standards for composite liners specified for municipal solid waste landfills at 40 CFR part 258; based on EPA's experience, such liner design would be expected to be effective in mitigating the risks of leaching to groundwater for a waste, such as CCRs. For example, CCRs do not contain volatile organics, such as ethylbenzene, which has recently been shown to be problematic for synthetic liners.

Although EPA has not confirmed damage cases involving the failure of clay liners, it is not proposing to allow new disposal units to be built solely with clay liners. EPA's modeling in its risk assessment indicated that clay liners could be of concern; EPA also believes that composite liners reflect today's best practices for new units, and, as such, can therefore be feasibly implemented.[128] Nevertheless, EPA solicits comments on whether clay liners should also be allowed under EPA's regulations. To assist EPA in its review, we request that commenters provide data on the hydraulic conductivity of clay liners associated with coal ash disposal units, and information on the protectiveness of clay liner designs based on site-specific analyses.

Thus, we are proposing to amend the current requirements of 40 CFR 264.220, and 264.300 to require that CCR surface impoundments and landfills install a composite liner and leachate collection and removal system. EPA would codify these requirements, as well as other special requirements for CCR wastes in a new subpart FF of 40 CFR part 264.

EPA also notes that section 3004(o)(2) allows the Agency to approve alternate liner designs, based on site-specific demonstrations that the alternate design and operating practices, together with location characteristics, will prevent the migration of any hazardous constituents into ground or surface water at least as effectively as the double-liner system (42 U.S.C. 6924(o)(2)). EPA solicits comment on whether, in addition to the flexibility provided by section 3004(o)(2), EPA's regulations should also provide for alternative liner designs based on, for example, a specific performance standard, such as the subtitle D performance standard in 40 CFR 258.40(a)(1), or a site specific risk assessment, or a standard that the alternative liner, such as a clay liner, was at least as effective as the composite liner. Such an approach might be appropriate, for example, in situations where groundwater is particularly deep and/or infiltration rates are low, or where alternative liner systems provide an equivalent level of protection.

Subtitle C of RCRA requires only new hazardous waste landfills (or new portions of existing landfills) to meet the minimum technology requirements for liners and leachate collection and removal systems. RCRA section 3004 (o)(1)(A). The statute thus does not require existing landfills that are brought into the subtitle C system because they are receiving newly listed hazardous wastes, or the new category of listed special wastes proposed in this notice, to be retrofitted with a new minimum-technology liner/leachate collection and removal system (or to close). They can continue to receive hazardous or special waste, and continue to operate as compliant hazardous or special waste landfills. Following from these provisions, EPA has not typically required existing landfills to be retrofitted to meet the new requirements. Congress specifically established this approach under subtitle C, and EPA sees no reason or special argument to adopt more stringent requirements for CCR landfills, particularly given the volume of the material and the disruption that would be involved with any other approach. However, under the proposal, existing units would have to meet the groundwater monitoring, corrective action, and other requirements of the subtitle C regulations to assure that any groundwater releases from the unit were identified and promptly remediated. This is consistent with the manner in which EPA has historically implemented the hazardous waste requirements. EPA believes that maintaining this approach in this context will be protective, in part, because, unless facilities ship all of their wastes off-site (which EPA believes is highly unlikely), they will need a permit for on-site management of CCRs, which will provide regulatory oversight that could, as necessary, address the risks from the existing (unpermitted) landfills.

By contrast, Congress was significantly more concerned about the risks associated with unlined surface impoundments managing newly listed hazardous wastes (*see* 42 U.S.C. Section 6924, October 21, 1976). This is addressed in more detail in section (iv) below titled "Wet-Handling of CCRs, Closure, and Interim Status for Surface Impoundments."

ii. Fugitive Dust Controls

The proposed subtitle C approach would require that surface impoundments and landfills be managed in a manner that controls fugitive dust consistent with any applicable requirements developed under a State Implementation Plan (SIP) or issued by EPA under section 110 of the Clean Air Act (CAA). Specifically, EPA is proposing to adopt as a standard the 35 $\mu g/m^3$ level established as the level of the 24-hour NAAQS for fine particulate matter (PM–2.5). In addition, CCR facilities would be required to control fugitive dust by either covering or otherwise managing CCRs to control wind dispersal of dust, emplacement as wet conditioned CCRs to control wind dispersal, when stored in piles, or storage in tanks or buildings. For purposes of the proposal, wet conditioning means wetting CCRs with water to a moisture content that prevents wind dispersal, facilitates compaction, but does not result in free liquids. Trucks or other vehicles transporting CCRs are to be covered or otherwise managed to control wind dispersal of dust. EPA is proposing this requirement based on the results of a screening level analysis of the risks posed by fugitive dusts from CCR landfills, which showed that, without fugitive dust controls, levels at nearby locations could exceed the 35 $\mu g/m^3$ level established as the level of the 24-hour PM 2.5 NAAQS for fine particulate.

iii. Special Requirements for Stability of CCR Surface Impoundments

To detect and prevent potential catastrophic releases, EPA is proposing requirements for periodic inspections of surface impoundments. The Agency

[128] EPA notes that the state of Maryland, in developing new standards for CCR disposal units under its subtitle D authorities, prescribes composite liners.

believes that such a requirement is critical to ensure that the owner and operator of the surface impoundment becomes aware of any problems that may arise with the structural stability of the unit before they occur and, thus, prevent the past types of catastrophic releases, such as at Martins Creek, Pennsylvania and TVA's Kingston, Tennessee facility. Therefore, EPA is proposing that inspections be conducted every seven days by a person qualified to recognize specific signs of structural instability and other hazardous conditions by visual observation and, if applicable, to monitor instrumentation. If a potentially hazardous condition develops, the owner or operator shall immediately take action to eliminate the potentially hazardous condition; notify the Regional Administrator or the authorized State Director; and notify and prepare to evacuate, if necessary, all personnel from the property which may be affected by the potentially hazardous condition(s). Additionally, the owner or operator must notify state and local emergency response personnel if conditions warrant so that people living in the area down gradient from the surface impoundment can be evacuated. Reports of inspections are to be maintained in the facility operating record.

To address surface impoundment (or impoundment) integrity (dam safety), EPA considered two options. One option, which is the option proposed in this notice, is to establish standards under RCRA for CCR surface impoundments similar to those promulgated for coal slurry impoundments regulated by the Mine Safety and Health Administration (MSHA) at 30 CFR 77.216. Facilities relying on CCR impoundments would need to (1) submit to EPA or the authorized state plans for the design, construction, and maintenance of existing impoundments, (2) submit to EPA or the authorized state plans for closure, (3) conduct periodic inspections by trained personnel who are knowledgeable in impoundment design and safety, and (4) provide an annual certification by an independent registered professional engineer that all construction, operation, and maintenance of impoundments is in accordance with the approved plan. When problematic stability and safety issues are identified, owners and operators would be required to address these issues in a timely manner.

In developing these proposed regulations for structural integrity of CCR impoundments, EPA sought advice from the federal agencies charged with managing the safety of dams in the United States. Many agencies in the federal government are charged with dam safety, including the U.S. Department of Agriculture (USDA), the Department of Defense (DOD), the Department of Energy (DOE), the Nuclear Regulatory Commission (NRC), the Department of Interior (DOI), and the Department of Labor (DOL), MSHA. EPA looked particularly to MSHA, whose charge and jurisdiction appeared to EPA to be the most similar to our task. MSHA's jurisdiction extends to all dams used as part of an active mining operation and their regulations cover "water, sediment or slurry impoundments" so they include dams for waste disposal, freshwater supply, water treatment, and sediment control. In fact, MSHA's current impoundment regulations were created as a result of the dam failure at Buffalo Creek, West Virginia on February 26, 1972. (This failure released 138 million gallons of stormwater run-off and fine coal refuse, and resulted in 125 persons being killed, another 1,000 were injured, over 500 homes were completely demolished, and nearly 1,000 others were damaged.)

MSHA has nearly 40 years of experience writing regulations and inspecting dams associated with coal mining, which is directly relevant to the issues presented by CCRs in this rule. In our review of the MSHA regulations, we found them to be comprehensive and directly applicable to the dams used in surface impoundments at coal-fired utilities to manage CCRs. We also believe that, based on the record compiled by MSHA for its rulemaking, and on MSHA's 40 years of experience implementing these regulations, these requirements will prevent the catastrophic release of CCRs from surface impoundments, as occurred at TVA's facility in Kingston, Tennessee, and will generally meet RCRA's mandate to ensure the protection of humans and the environment. Thus, we have modeled our proposal on the MSHA regulations in 30 CFR Part 77 and we have placed the text of the salient portions of the MSHA regulations in the docket for this rulemaking. The Agency requests comment on EPA's proposal to adopt the MSHA standards (with limited modifications to deal with issues specific to CCR impoundments) to address surface impoundment integrity under RCRA.

MSHA's regulations cover impoundments which can present a hazard and which impound water, sediment or slurry to an elevation of more than five (5) feet and have a storage volume of 20 acre-feet or more and those that impound water, sediment, or slurry to an elevation of 20 feet or more. EPA seeks comment on whether to cover all CCR impoundments for stability, regardless of height and storage volume, whether to use the cut-offs in the MSHA regulations, or whether other regulations, approaches, or size cut-offs should be used. If commenters believe that other regulations or size cut-offs should be adopted (and not the size-cut offs established in the MSHA regulations), we request that commenters provide the basis and technical support for their position.

The second option that EPA considered, but is not being proposed today, is to establish impoundment integrity requirements under the Clean Water Act's NPDES permit system. Existing regulations at 40 CFR 122.41(e) require that permittees properly operate and maintain all facilities of treatment and control used to achieve compliance with their permits. In addition, regulations at 40 CFR 122.44(k) allow the use of best management practices for the control and abatement of the discharge of toxic pollutants. Guidance could be developed to use best management practices to address impoundment construction, operation, and maintenance, consistent with the requirements of 40 CFR 122.41(e) and 122.44(k). Associated permit conditions could require that surface impoundments be designed and constructed in accordance with relevant state and federal regulations. The Agency requests comments regarding the alternate use of NPDES permits rather than the development of RCRA regulations to address dam safety and structural integrity.

iv. Wet-Handling of CCRs, Closure, and Interim Status for Surface Impoundments

Where a nonhazardous waste surface impoundment is storing a waste that becomes newly subject to the RCRA hazardous waste requirements, RCRA subtitle C and the implementing regulations require these surface impoundments either to be closed or upgraded to meet the minimum technology requirements within four years. RCRA section 3005 (j)(6), is implemented by 40 CFR 268.14.[129] In order to be eligible for this four year grace period, the impoundment must be in compliance with the applicable

[129] 40 CFR 268.14 allows owners and operators of newly regulated surface impoundments to continue managing hazardous waste without complying with the minimum technology requirements for a period up to four years before upgrading or closing the unit.

groundwater monitoring provision under Part 40 CFR 265, Subpart F within 12 months of the promulgation of the new hazardous listing or characteristic.

RCRA section 3005 (j)(11) allows the placement of untreated hazardous waste (*i.e.* hazardous waste otherwise prohibited from land disposal which has not been treated to meet EPA-established treatment standards before land disposal) in surface impoundments under limited circumstances. Such hazardous wastes may be placed in impoundments for purposes of treatment provided the impoundments meet the minimum technology requirements and provided that any treatment residues which either do not meet the treatment standards or which remain classified as hazardous wastes are removed from the impoundment annually. *See* the implementing rules in 40 CFR section 268.4. EPA has interpreted this provision so as not to nullify the provisions of section 3005(j)(6), the upshot being that impoundments receiving newly identified or listed wastes would have four years to close or retrofit under all circumstances. *See* 56 FR 37194. If the surface impoundment continues to treat hazardous wastes after the four year period, it must then be in compliance with 40 CFR 268.4 (Treatment Surface Impoundment Exemption).

Section 3005(j) of RCRA generally requires that existing surface impoundments cannot obtain interim status and continue to receive or store newly regulated hazardous waste for more than four years after the promulgation of the listing—unless the facility owner retrofits the unit by installing a liner that meets the requirements of section 3004(o)(1)(A), or meets the conditions specified in section 3005(j)(2). Under section 3005(j)(2), a surface impoundment may obtain interim status and continue to receive or store hazardous waste after the four-year deadline if (1) The unit has at least one liner, and there is no evidence it is leaking, (2) is located more than one-quarter mile from an underground source of drinking water; and (3) complies with the groundwater monitoring requirements applicable to permitted facilities. In this case, under section 3005(j)(9), the facility owner, at the closure of the unit, would have to remove or decontaminate all waste residues, all contaminated liner material, and contaminated soil to the extent practicable.

As part of the requirement to assure that surface impoundments will be safely phased out, EPA also proposes to regulate surface impoundments that have not completed closure prior to the effective date of the rule. Under that scenario, these units would be subject to the interim status closure requirements of 40 CFR 265.111 and 265.228(a)(2). For surface impoundments that have not met the interim status requirements by the effective date of the rule, they would be subject to the full RCRA subtitle C closure requirements (*e.g.,* obtain a Part A permit and comply with the interim status regulations).

EPA recognizes that for regulatory purposes, it has historically not required disposal units that cease receiving new listed or characteristic wastes before the effective date of RCRA subtitle C to comply with the requirements. However, EPA believes that a revised approach is necessary to protect human health and the environment, in this particular case, given the size of the CCR surface impoundments in question; the enormous volumes of CCRs they typically contain (which typically represent overwhelming mass of the material in place); the fact that the CCRs are typically destined for permanent entombment when the unit is eventually closed (typically with limited removal); the presence of very large hydraulic head leading to continued release—even where the impoundment has been drained—that is, improperly closed CCR impoundments remain open to precipitation and infiltration; and the continuing threat to human health and the environment through catastrophic failure, if the impoundments are not properly closed.

EPA's authority under subtitle C of RCRA extends to wastes that are treated, stored, or disposed of; the statutory definition of disposal has been broadly interpreted to include passive leaking. But historically, EPA has construed the definition of disposal for regulatory purposes to be narrower than the statutory definition of disposal. Although in some situations, post-placement management has been considered disposal, triggering RCRA subtitle C regulatory requirements *e.g.,* multiple dredging of impoundments or management of leachate, EPA has generally interpreted the statute to require a permit only if a facility treats, stores, or disposes of the waste, after the effective date of its designation as a hazardous waste. *See, e.g.,* 43 FR 58984 (Dec. 18, 1978; 45 FR 33074 (May 1980).

The consequence of this interpretation is that, for example, no permit would be required if, after the rule's effective date, a facility neither continued to accept the listed wastes for disposal, nor continued to "manage the wastes" in the existing unit. In other words, under this interpretation, facility owners could abandon the unit before the effective date of the rule without incurring any regulatory obligations under RCRA subtitle C (presuming no other regulated unit is present on-site).

Given the particularly significant risk associated with CCR impoundments described above, as well as the fact that these risks are primarily driven by the existing disposal units, EPA believes a broader interpretation of disposal is appropriate in this case. This is reinforced by the fact that the continued release of constituents to surrounding soil and groundwater through the continued infiltration of precipitation through inappropriately closed CCR impoundments (or failure to remove the impoundment waters, which provides a hydraulic head) properly constitute regulatory disposal in this specific situation.

As a practical matter, EPA believes that owners of facilities where CCRs are managed in existing surface impoundments being brought under RCRA subtitle C by today's proposal would choose not to, or would not be able to, comply with either of these alternatives (*i.e.,* retrofit or clean closure), given the size of the units and the volume of CCRs involved. Therefore, EPA believes that the section 3005(j) requirements, for all practical purposes, will have the effect of requiring the closure of existing surface impoundments receiving CCRs within four years of the effective date of today's proposed rule (unless they already meet the liner requirements).[130]

Section 3004(x), however, gives EPA the authority to modify section 3005(j) requirements, if the specific criteria listed in that section are met. In today's notice, EPA is proposing to modify the time required for retrofitting surface impoundments under section 3005(j), because of the special characteristics (*i.e.,* extremely large volumes) of CCRs and the practical difficulties associated with requiring facilities to cease to store CCRs within four years of the effective date of today's rule.

Therefore, EPA is proposing to modify the section 3005(j) requirements by extending the time limit for unit closure. The modified standard in today's proposal would require facilities operating surface impoundments that do not meet minimum technology

[130] The HSWA surface impoundment retrofit requirements, as they applied to impoundments in existence at the time RCRA was amended in 1984, went into effect in 1988. EPA is not aware of any facility owner/operator managing an existing surface impoundment at the time who chose to retrofit its impoundment, rather than to close it. EPA believes facilities managing surface impoundments today, will similarly choose to close the surface impoundment rather than retrofit.

requirements and are receiving CCRs to stop receiving those CCRs no later than five years after the effective date of the final regulation and to close the unit within two years after that date. In other words, the time required for closure would be up to seven years rather than four years.

EPA believes that the four-year deadline in RCRA section 3005(j) receiving CCRs will be extraordinarily difficult if not impossible for many facilities to meet, given the size of the units and limitations in available alternative subtitle C disposal capacity. Facility owners choosing to close surface impoundments may have to make significant engineering and process changes, *e.g.,* to convert from wet- to dry-handling of wastes, which cannot necessarily be accomplished within four years. For example, USWAG has raised concerns that there is limited manufacturing capacity for key conversion equipment, which could reasonably be expected to complicate the utilities' ability to collectively make the necessary engineering changes within a four-year timeframe. An additional consideration is that EPA expects that many facilities would need to obtain permits for new units or find alternative subtitle C capacity to receive the wastes diverted from surface impoundments. Also, facilities that use surface impoundments receiving CCRs to manage stormwater and nonhazardous wastewater will have to site and get permits for new stormwater management units before facility owners can cease utilizing existing units. The amount of time to achieve either of these alternatives relies, to some extent, on events beyond the facility's control; for example, the timeframes to obtain a permit for a new unit can vary substantially and, in large measure, are ultimately dictated by the permitting authority, rather than the applicant. This may be further complicated by the fact that location standards or on-site space limitations can restrict the opportunity for siting new units at the generating facility, requiring utilities to find off-site disposal facilities able to receive the special waste in the volumes in question.

In the 1984 amendments, Congress only allowed surface impoundments four years to cease receiving hazardous waste (or comply with minimum technological design requirements, etc.). Given the enormously greater volume of waste involved with CCR surface impoundments and the process changes that the facilities will need to implement to convert to dry handling, EPA believes it not practicable to require surface impoundments to cease receiving CCR waste or comply with the minimum technological requirements four years and that additional time is appropriate. (As noted below, facilities in most states will have significantly more time for planning, because the rules will not become effective in states authorized for the RCRA program before those states have amended their requirements consistent with today's rule; the state regulatory process will likely take several years.) On the other hand, as the risks predicted in the risk assessment are extraordinarily high (up to 2×10^{-2}), EPA believes that closure within the shortest practicable time is important.

Any modifications of section 3005(j) must meet the section 3004(x) stricture that the modification must still "assure protection of human health and the environment (42 U.S.C. 6924(x)." EPA believes that allowing three additional years for closure, under today's proposal, would be protective because surface impoundments subject to the closure requirements would be required (during this interim period) to have groundwater monitoring systems sufficient to detect releases of hazardous constituents into the groundwater, and take corrective action where releases were detected above drinking water levels.[131] Additionally, the median number of years until peak well water concentrations are reached for selenium and arsenic are estimated at 74 and 78 years, respectively, for unlined surface impoundments and 90 and 110 years, respectively, for clay-lined surface impoundments, reducing the likely risks posed over this five-year period.

In addition, although not directly relevant to leaching from these surface impoundments, we would also note (as described previously in this section) that the facility would be required to have an independent registered professional engineer certify that design of the impoundment is in accordance with recognized and generally accepted good engineering practices (RAGAGEP)[132] for the maximum volume of CCR slurry and wastewater that will be impounded therein, and that the design and management features ensure dam stability. Finally, the facilities will be required to conduct weekly inspections to ensure that any potentially hazardous condition or structural weakness will be quickly identified. Therefore, the additional timeframe that EPA is proposing to allow—needed to address practical realities—will "assure protection of human health and the environment. While groundwater monitoring, corrective action, and close oversight of these units is not, we believe, the most appropriate long-term solution, we do believe that these steps will protect public health and the environment in the short term while the permanent solutions are being implemented.

EPA recognizes that the costs of these requirements will be significant, especially for existing surface impoundments and similar units that handle wet CCRs. EPA also acknowledges that the date by which impoundments have to close is an important issue, affecting the costs of phase-out of wet handling and the ability of industry to comply. USWAG has argued strenuously against a closure requirement in the first place, and has asserted that, if such a requirement were imposed, industry would require ten years to comply.[133]

EPA is not persuaded by these comments. We appreciate the cost considerations but also believe it is important that these surface impoundments cease receiving wet-handled CCRs and proceed to closure as soon as practicable. The Agency believes that the time period proposed today is sufficient to provide industry the time necessary to convert from wet handling to dry handling of these wastes, close out existing units, and find or put in place new disposal capacity for these wastes. In addition, the Agency notes that TVA and other utilities have already decided, or are being required by states, to close existing impoundments, regardless of the requirements of today's proposed rule. As a result, EPA believes today's proposal would have less effect than industry commenters suggest because some facilities may be making these changes anyway and they reflect best management practices in today's environment. However, EPA solicits comments on whether seven years (5 years to cease receiving waste and 2 years to close) from the effective date to implement these provisions is an achievable time for facilities to comply.

[131] The Agency is also modifying the requirement that surface impoundments be dredged annually, based on RCRA section 3004(x). This is discussed in detail in section v (Proposed Land Disposal Restrictions) below.

[132] Recognized and generally accepted good engineering practices (RAGAGEPs) are engineering, operation, or maintenance activities based on established codes, standards, published technical reports or recommended practices (RP) or a similar document. RAGAGEPs detail generally approved ways to perform specific engineering, inspection or mechanical integrity activities. *See http://www.osha.gov/OshDoc/Directive_pdf/CPL_03-00-010.pdf.*

[133] In developing cost estimates for closing its surface impoundments, TVA also assumed that the process would take place over ten years.

EPA is interested in comments on procedural, as well as technical, issues (*e.g.,* time to allow permit modifications for new capacity or EPA or state approval of closure plans). As stated earlier, EPA does note that, in the 1984 amendments to RCRA, Congress required existing hazardous waste surface impoundments without liners to retrofit within four years if they are to continue operating. Congress also required impoundments which place hazardous wastes into impoundments to either treat the wastes first, or to use minimum technology impoundments, including a requirement to dredge the impoundment annually. *See* discussion of section 3005(j)(11) and implementing regulations above. As a practical matter, this meant that all but a very few surface impoundments ceased receiving hazardous wastes within this time period. Thus, a requirement that surface impoundments cease receiving liquid wastes in five years and close in seven years is consistent with Congressional direction on appropriate time periods to phase out the management of CCRs in surface impoundments. Further, as noted previously, these specific requirements will not go into effect in most cases until a state is authorized for this aspect of the RCRA program, which normally takes from two to five years after the regulations become federally effective (with some estimates as long as eight years), giving facilities substantial advance notice. (*See* discussion on when the rules become effective in section VII of this preamble.) For commenters who suggest a longer time period is needed, EPA solicits comment on how a longer time period would meet the section 3004(x) risk standard.

Whatever time period EPA selects, the Agency solicits comment on whether it should include a provision that would allow the regulatory Agency to provide additional time on a case-by-case basis because of site-specific issues (*e.g.,* particular technical difficulties or equipment availability outside the utility's control, as well as permitting delays). This provision might be modeled after the provision of 40 CFR 264.112 and 265.112 (Amendment of Plans), allowing facilities to delay closure of hazardous waste management units.

Commenters have also stated that, while it may be appropriate to require closure of most existing impoundments, some may be clearly safe. For example, existing impoundments theoretically may already have a composite liner, and present minimal threat of release (*e.g.,* because they are below grade or not far above grade). EPA solicits comment on whether a variance process would be appropriate allowing some impoundments or similar units that manage wet-handled CCRs to remain in operation because they present minimal risk to groundwater (*e.g.,* because they have a composite liner) and minimal risk of a catastrophic release (*e.g.,* as indicated by a low potential hazard rating under the Federal Guidelines for Dam Safety established by the Federal Emergency Management Agency). It should be noted that the statute already provides such a mechanism in section 3005 (j)(4) and (5) (based on making a so-called 'no-migration' demonstration—evidently Congress' view of what level of control is considered protective for hazardous waste impoundments not utilizing minimum technology controls [134]) and commenters should address whether this existing case-by-case mechanism should be utilized here. In such cases, the wastes might also meet current LDR treatment standards.

v. Proposed Land Disposal Restrictions

Through RCRA sections 3004 (d), (e), (f), and (g), Congress has prohibited the land disposal of hazardous waste unless the waste meets treatment standards established by EPA before the waste is disposed of, or is disposed of in units from which there will be no migration of hazardous constituents for as long as the waste remains hazardous. The treatment standards may be either a treatment level or a specified treatment method, and the treatment must substantially diminish the toxicity of the waste or substantially reduce the likelihood of migration of hazardous constituents from the waste so that short-term and long-term threats to human health and the environment are minimized (RCRA section 3004(m)). If the hazardous waste has been treated to the level or by a method specified in the regulations (or if the waste as generated meets the treatment standard), the waste is not subject to any land disposal prohibition and may be disposed of in a land disposal unit which meets the requirements of 40 CFR parts 264 or 265 (the exception being for surface impoundments discussed in the preceding subsection and further below). For hazardous wastes identified or listed under RCRA section 3001 after the date of the 1984 amendments to RCRA subtitle C (the situation here), EPA is required to determine whether the waste shall be prohibited from one or more methods of land disposal within six months after the date of such identification or listing, and if EPA determines that one or more methods are prohibited, the Agency is also required to specify treatment levels or methods of treatment for the waste (RCRA section 3004(g)(4)).

In an effort to make treatment standards as uniform as possible, while adhering to the fundamental requirement that the standards must minimize threats to human health and the environment before hazardous wastes can be land disposed, EPA developed the Universal Treatment Standards (UTS) (codified at 40 CFR 268.48). Under the UTS, whenever technically and legally possible, the Agency adopts the same technology-based numerical limit for a hazardous constituent regardless of the type of hazardous waste in which the constituent is present. *See* 63 FR 28560 (May 26, 1998); 59 FR 47982 (September 19, 1994). The UTS, in turn, reflect the performance of Best Demonstrated Available Technologies (BDAT) of the constituents in question. These treatment standards can be met by any type of treatment, other than impermissible dilution, and wastes can satisfy the treatment standards as generated (*i.e.,* without being treated).

As explained above, section 3004(x) of RCRA authorizes the EPA Administrator to modify the requirements of sections (d), (e), (f), and (g) of section 3004 for Bevill wastes, including CCRs that EPA determines to regulate as hazardous, to take into account the special characteristics of the wastes, the practical difficulties associated with implementation of the requirements, and site-specific characteristics, so long as such modified requirements assure protection of human health and the environment.

In conjunction with a proposed listing, EPA is proposing to prohibit the land disposal of CCRs, unless they meet the applicable treatment standards. In addition, although CCRs could be disposed of without treatment in landfills and impoundments from which there will be no migration of hazardous constituents for as long as the waste remains hazardous, EPA doubts that such a unit exists, given the volumes of CCRs and their many (documented) release pathways discussed above. In any case, no-migration determinations are necessarily made on a case-by-case basis, and the burden is on petitioners to show that individual land disposal units satisfy the exacting standard. *See* 40 CFR section 268.6.

[134] See RCRA section 3004 (d), (e), (f), and (g) all of which define a land disposal unit as protective of human health and the environment if "it has been demonstrated to a reasonable degree of certainty that there will be no migration of hazardous constituents from the disposal unit * * * for as long as the wastes remain hazardous".

2. Proposed Treatment Standards for Non-Wastewaters (Dry CCRs)

For non-wastewaters (*i.e.,* dry CCRs), EPA is proposing that CCRs be subject to the UTS. As EPA has found repeatedly, this standard reflects the performance of Best Demonstrated Available Technology and so satisfies the requirements of section 3004 (m) (*see Hazardous Waste Treatment Council* v. *EPA,* 886 F. 2d 355, 363 (D.C. Cir. 1989)), and also does not force treatment past the point at which threats to human health and the environment are minimized (*see* 55 FR 6640, 6641–42 (Feb. 26, 1990)). These standards should be achievable by application of various available technologies, although data [135] indicate that a great portion (if not virtually all) dry CCRs meet these standards as generated.

3. Proposed Treatment Standards for Wastewaters (Wet-Handled CCRs)

EPA is also proposing standards for wastewater CCRs. As an initial matter, EPA is proposing to adopt a specific and different definition of wastewater for CCRs. Under the existing RCRA subtitle C rules, a wastewater is defined as one that contains less than 1% by weight total organic carbon (TOC) and less than 1% by weight total suspended solids (*i.e.,* the current wastewater definition for purposes of LDRs; *see* 40 CFR part 268.2 (f)). Functionally, the current definition of wastewaters would not include slurried fly ash or slurried FGD from wet air pollution control systems. EPA believes it important to distinguish between nonwastewaters which involve dry coal ash and surface impoundment systems which are commonly viewed as involving wastewaters. EPA, therefore, is proposing to create the distinction between wastewater and nonwastewater CCRs by classifying CCRs as wastewaters if the moisture content of the waste exceeds 50%. Thus, if CCRs contain more water than solids, the CCR would be classified as a wastewater, and would be subject to the LDR treatment standard for wastewaters. By proposing the criteria at 50% moisture, EPA believes new methods for pumping and disposal of high solids material without free liquids are still viable. EPA is proposing this definition to appropriately address risks associated with CCRs surface impoundments, which contain free liquids. However, the Agency requests comment on this alternative definition of wastewaters for purposes of determining which treatment standards the CCRs would be subject to.

As part of the proposed treatment standard, EPA is proposing that these wastewaters undergo solids removal so that the wastewaters contain no greater than 100 mg/l total suspended solids (TSS) and meet the UTS for wastewaters. This proposed level is consistent with wastewater treatment requirements based on Best Practicable Control Technology Currently Available for the Electric Power Generating Point Source Category (40 CFR section 423.12).[136] Solids separation is a base level water pollution control technology, which assures that the vast majority of coal ash and associated contaminants are removed and managed in landfills.

EPA is proposing that wastewaters meet the UTS for wastewaters at 40 CFR section 268.48 as the treatment standard for the liquid fraction. (The CCR solids removed from the wastewater stream would be a non-wastewater and would be subject to the UTS for non-wastewaters.) EPA believes dry disposal of the CCR solids will protect human health and the environment. As previously discussed, this is borne out by the results of the Agency's risk assessment and damage case assessments, which show that wet disposal poses the greatest risks of contaminant releases.

The Agency believes the proposed treatment methods will diminish the toxicity of the waste or substantially reduce the likelihood of migration of toxic constituents from the waste so that short-term and long-term threats to human health and the environment are minimized. If finalized, EPA will add new treatment method codes to the table of Technology Codes and Description of Technology-Based Standards at 40 CFR 268.42. EPA seeks comments on the proposed treatment standards.

4. Effective Date of the LDR Prohibitions

Land disposal prohibitions are to be effective immediately unless EPA finds that there is insufficient alternative protective treatment, recovery or disposal capacity for the wastes. RCRA section 3004(h)(2). National capacity variances can be for up to two years from the date of the prohibition. During the duration of a national capacity variance, the wastes do not require treatment in order to be land disposed. If they are disposed of in a landfill or surface impoundment, however, that unit must meet the minimum technology requirements of RCRA section 3004(o). RCRA section 3004 (h) and 40 CFR section 268.5 (h).[137]

In this case, EPA is proposing that the prohibition and treatment standards for nonwastewaters take effect within 6 months from the date of promulgation of the listing of CCRs as a special waste. We are proposing 6 months to allow time for owners and operators to set up analytic capacity and record-keeping mechanisms for dry CCR wastes, as well as for federal and state agencies to assure that implementation mechanisms are in place. We are not allocating additional time for treatment because our expectation is that all or virtually all dry CCRs meet the proposed treatment standards as generated. However, EPA solicits comment on this issue. EPA also notes that the proposed LDR prohibition and treatment standards would not take effect until programs in authorized states are authorized and the state implementing rules take effect, so this proposal effectively is for the prohibition and treatment standard requirement to take effect 6 months following the conclusion of the authorization process and effective date of authorized state rules. This should be ample time to come into compliance.

For wastewaters, however, under the authority of section 3004 (x), we are proposing that the prohibition and treatment standards take effect within five years of the prohibition. In practice, these requirements will have the effect of prohibiting disposal of wet-handled CCRs in surface impoundments after that date. The proposed date for the wastewater treatment standards would thus be the same as the proposed date that impoundments would stop receiving CCRs, and is being proposed for many of the same reasons. Surface impoundments, of course, are the land disposal units in which wastewaters are managed, so the issues are necessarily connected. As discussed in section VI. B. above, the statute allows owners and operators up to four years to retrofit existing surface impoundments to meet

[135] EPA's CCR constituent database which is available from the docket to this proposal.

[136] Although TSS is not a hazardous constituent, it is a reasonable surrogate of effective treatment performance here because TSS necessarily contain the metal hazardous constituents which are the object of treatment, and these metals will necessarily be removed as TSS are removed. See e.g.; *National Lime Ass'n* v. *EPA, 234 F. 3d 625, 639* (D.C. Cir. 2000) (even though particulate matter is not a hazardous air pollutant, it can be used as a permissible surrogate for treatment of hazardous air pollutant metals since those metals are removed by treatment as PM is removed).

[137] EPA is also authorized to grant up to a one-year extension, renewable for another year, of a prohibition effective date on a case-by-case basis. RCRA section 3004 (h)(3). Applicants must demonstrate that adequate alternative treatment, recovery, or disposal capacity for the petitioners waste cannot reasonably be made available by the effective date due to circumstances beyond the applicant's control, and that the petitioner has entered into a binding contractual commitment to construct or otherwise provide such capacity. 40 CFR 268.5.

the minimum technology requirements (or to close such surface impoundments), and EPA has interpreted this provision as applying to treatment surface impoundments receiving hazardous wastes otherwise prohibited from land disposal. *See* RCRA sections 3005 (j)(6) and 3005 (j)(11). As further explained above, EPA believes that an additional three years is needed for owners and operators to close surface impoundments—*i.e.* seven years in all—and is thus proposing a two year national capacity variance (as provided in RCRA section 3004(h)(2)) and a five year period for impoundment retrofitting yielding a seven year extension.

The legal basis for the proposal is 3004 (x) (which specifically authorizes modification of the section 3005 (j) requirements). Section 3005 (j) (11) allows untreated wastewaters to be managed in surface impoundments that do not meet the minimum technology requirements, but requires that residues in the impoundment be dredged at least annually for management elsewhere. Given the enormous volume of CCRs currently managed in surface impoundments, estimated at 29.4 million tons per year (within EPA's estimated range of 23.5 to 30.3 million tons for the total available U.S. hazardous waste disposal capacity), and the absence of alternative disposal capacity in the short-term, EPA believes annual dredging is impractical and would defeat the purpose of providing additional time to convert to the dry handling of CCRs. Moreover, in this short time, the utilities will be working to convert their processes to dry handling and it is not practicable or necessary to impose this additional requirement. Finally, as discussed previously, in the interim period before surface impoundments cease taking waste and are closed, numerous safeguards will be in place to protect public health and the environment, including ground water monitoring and the requirement to act on any releases quickly. Thus, while such measures are not a long-term solution, they will "assure protection of human health and the environment" in the short-term.

As this discussion clarifies, the issue of a national capacity extension for CCR wastewaters is really an issue of how long it will take to convert to dry handling and to find management capacity for solids dredged from impoundments, *i.e.* issues arising under section 3005 (j)(11) of the statute. EPA, therefore, believes it has the authority and that it is appropriate to use section 3004 (x) to extend the national capacity period in order to convert to dry handling.[138]

EPA is further proposing that during the national capacity variance (the initial two years of the proposed two years plus five year extension of otherwise-applicable requirements), CCR wastewaters could continue to be managed in impoundments that do not meet the minimum technology requirements. The reasons are identical to those allowing such impoundments to receive CCRs for the remainder of the proposed extension period.

EPA solicits comment on these proposals, including comment on whether further time extensions are actually needed in light of the already extended time which will be afforded by the state authorization process.

C. Applicability of Subtitle C Regulations

The discussion in this section describes the existing technical standards required in 40 CFR parts 264/265/267. However, persons who generate and transport CCRs, under the subtitle C alternative, would also be subject to the generator (40 CFR part 262) and transporter (40 CFR part 263) requirements. Although EPA presents this to provide the public with background information as noted previously, EPA is not proposing to modify these standards, nor to reopen the requirements.

1. General Facility Requirements, including Location Restrictions. Under the existing regulations, all of the following requirements would apply: the general facility standards of 40 CFR parts 264/265/267 (Subpart B), the preparedness and prevention standards of 40 CFR parts 264/265/267 (Subpart C), the contingency plan and emergency procedures of 40 CFR parts 264/265/267 (Subpart D), and the manifest system, recordkeeping, and reporting requirements of 40 CFR parts 264/265/267 (Subpart E). Consistent with section 264.18, the regulations would include location standards prohibiting the siting of new treatment, storage, or disposal units in a 100-year floodplain (unless the facility made a specific demonstration)[139] and seismic impact areas would be prohibited.[140]

2. Ground water monitoring/corrective action for regulated units. The subtitle C alternative to today's proposed rule would require the current ground water monitoring and corrective action requirements of 40 CFR parts 264/265 for regulated landfills and surface impoundments, without modification. Consistent with 40 CFR 265.90, existing CCR disposal units would be required to install groundwater monitoring systems within one year of the effective date of these regulations. The facility would operate under the self-implementing interim status requirements of 40 CFR part 265 until the regulatory authority imposed the specific requirements of 40 CFR part 264 through the RCRA permitting process. Generally, 40 CFR parts 264/265 require groundwater monitoring systems that consist of enough wells, installed at appropriate locations and depths, to yield ground water samples from the uppermost aquifer that represent the quality of background groundwater that has not been affected by leakage from the disposal unit. A detection monitoring program would be required to detect releases to groundwater of CCR constituents listed in the facility permit (these constituents, we believe, would be the metals typically identified as constituents of concern in CCRs). Monitoring frequency is determined by the EPA Regional Administrator or, more typically the authorized state, and required in the RCRA permit. If any of the constituents listed in the facility permit are detected at levels that constitute statistically significant evidence of contamination, the owner or operator must initiate a compliance monitoring program to determine whether the disposal units are in

[138] EPA notes in addition that it is authorized under section 3004 (x) to modify the requirements of LDR prohibitions under section 3004 (g), and EPA views capacity variances related to such prohibitions as within the scope of that section 3004 (x) authorization.

[139] A 100-year flood means a flood that as a one-percent or greater chance of recurring in any given year or a flood of a magnitude equaled or exceeded once in 100 years on the average over a significantly long period.

[140] A seismic impact area means an area with a two percent or greater probability that the maximum horizontal acceleration in lithified earth material, expressed as a percentage of the earth's gravitational pull (g), will exceed 0.10 g in 50 years. Note that in the pre-1997 editions of the NEHRP (National Earthquake Hazards Reduction Program) provisions, seismic hazards around the nation were defined at a uniform 10 percent probability of exceedance in 50 years. Since the 1997 NEHRP Provisions, however, the seismic design maps have been redefined such that for most regions of the nation, the maximum considered earthquake ground motion is defined with uniform probability of exceedance of 2 percent in 50 years. The change in the exceedance probability (from 10% to 2%) was responsive to comments that the use of 10 percent probability of exceedance in 50 years is not sufficiently conservative in the central and eastern United States where earthquakes are expected to occur infrequently.

compliance with the groundwater protection standards established by EPA or the state and specified in the permit. (*See* 40 CFR part 264, subpart F.)

Under 40 CFR part 264, subpart F, if the results of the compliance monitoring program indicate exceedances of any of the constituent levels listed in the permit for the groundwater protection standard, the owner or operator would have to initiate corrective action to achieve compliance with the groundwater protection standards.

3. Storage. EPA is not proposing to modify the existing 40 CFR parts 264/265/267 storage standards. These regulations establish design and operating requirements for containers, tanks, and buildings used to treat or store hazardous wastes. For containers, the regulations establish requirements for the storage of hazardous waste, including a requirement for secondary containment. However, if the wastes do not contain free liquids, they need not require a secondary containment system, provided the storage area is sloped or is otherwise designed and operated to drain and remove liquid resulting from precipitation or the containers are elevated or otherwise protected from contact with accumulated liquid.

For new tanks, owners or operators must submit to EPA or the authorized states an assessment certified by an independent registered professional engineer that the foundation, structural support, seams, connections, and pressure controls (if applicable) are adequately designed and that the tank system has sufficient structural strength, compatibility with the waste(s) to be stored or treated, and corrosion protection to ensure that the tank will not collapse, rupture, or fail. Tank systems are required to have secondary containment under section 264.193, unless they receive a specific variance; however, tanks that contain no free liquids and are in buildings with an impermeable floor do not require secondary containment. New tanks (that are required to have secondary containment) must have secondary containment when constructed; existing tanks (that are required to have secondary containment) must come into compliance within two years of the rule's effective date (or when the tank has reached fifteen years of age). Section 264.193 specifically describes the secondary containment required, and the variance process.

Containment buildings must be completely enclosed with a floor, walls, and a roof to prevent exposure to the elements (*e.g.,* precipitation, wind, run-on), and to assure containment of the managed wastes. Buildings must be designed so that they have sufficient structural strength to prevent collapse or other failure, and all surfaces to be in contact with hazardous wastes must be chemically compatible with those wastes.

Recently, representatives of the utility industry have stated their view that CCRs cannot be practically or cost effectively managed under the existing 40 CFR parts 264/265/267 storage standards, and that these standards impose significant costs without meaningful benefits when applied specifically to CCRs.[141] In particular, they cite the very large volume of wastes that must be handled on a daily basis, and the extensive storage and other infrastructure already in place that might have to be retrofitted if the existing 40 CFR parts 264/265/267 storage requirements applied. For example, they state that some CCRs are stored prior to disposal in silos which are not located within a building and may contain free liquids. As a result, under the subtitle C requirements, the owner or operator would be required to construct a building with an impermeable floor, or construct a secondary containment system around the silo (alternatively, they could go through a variance process with the regulatory Agency).

EPA believes that the variance process allowing alternatives to secondary containment would address the concerns raised by industry. The Agency, however, recognizes that the variance process imposes time and resource burdens not only on industry, but on the regulatory agencies. EPA notes that, in the case of larger volume, higher toxicity mineral processing materials being reclaimed, the Agency developed special storage standards under RCRA subtitle C, and it solicits comments on whether those or similar-type standards would be appropriate for CCRs.[142]

Namely, in 40 CFR 261.4(a)(17), EPA required that tanks, containers, and buildings handling this material must be free standing and not a surface impoundment (as defined in the definitions section of this proposal) and be manufactured of a material suitable for storage of its contents. (While not specifically mentioned in this section, we would also consider a requirement that such materials meet appropriate specifications, such as those established either by the American Society of Testing Materials (ASTM), the American Petroleum Institute (API), or Underwriters Laboratories, Inc. (UL) standards.) Buildings must be man-made structures and have floors constructed from non-earthen materials, have walls, and have a roof suitable for diverting rainwater away from the foundation. A building may also have doors or removable sections to enable trucks or machines access.

EPA solicits comments on the practicality of the proposed subtitle C storage requirements for CCRs, the workability of the existing variance process, and the alternative requirements based, for example, on the mining and mineral processing wastes storage requirements. EPA has not developed cost estimates for managing CCRs in compliance with the 40 CFR parts 264/265/267 storage standards. EPA solicits specific comments on these potential costs.

4. Closure and Post-Closure Care. Under the RCRA subtitle C alternative to this co-proposal, all of the requirements for closure and post-closure care of landfills and surface impoundments would apply to those landfills that continue to receive CCRs, or otherwise actively manage them, and to those surface impoundments that have not completed closure, when the requirements of a final rule become effective. The 40 CFR parts 264/265 landfill and surface impoundment requirements establish cover requirements (*e.g.,* the cover must have a permeability less than or equal to the permeability of any bottom liner system and must minimize the migration of liquids through the closed landfill). These requirements are generally applied through a closure-plan or permit approval process. Also, the regulations require 30 years of post-closure care, including maintenance of the cap and ground-water monitoring, unless an alternative post-closure period is established by EPA or the authorized state.

5. Corrective action. EPA is also not proposing to modify the existing corrective action requirements, including the facility-wide corrective action requirements of RCRA under section 3004(u), section 3008(h), and 40 CFR 264.101. Under these requirements, landfills that continue to receive CCRs or otherwise actively manage them, and surface impoundments that have not

[141] While the utility industry did not specifically mention the 40 CFR part 267 storage standards, we presume that they would make the same technical arguments with respect to those standards.

[142] Land Disposal Restrictions Phase IV: Final Rule Promulgating Treatment Standards for Metal Wastes and Mineral Processing Wastes; Mineral Processing Secondary Materials and Bevill Exclusion Issues; Treatment Standards for Hazardous Soils, and Exclusion of Recycled Wood Preserving Wastewaters; Final Rule (*http://www.epa.gov/EPA-WASTE/1998/May/Day-26/f989.htm*).

completed closure on the date the final rule becomes effective, will be requires to characterize, and as necessary remediate, releases of CCRs or hazardous constituents. Section 3004(x) provides EPA the flexibility to modify corrective action requirements for facilities managing CCRs, including facility-wide corrective action (assuming EPA can reasonably determine that an alternative is protective of human health and the environment). The facility-wide corrective action requirement applies to all solid waste management units from which there have been releases of hazardous wastes or hazardous constituents; however, EPA does not *see* a compelling reason to change the corrective action requirements. Imposing corrective action requirements, including facility-wide corrective action, will assure that closed and inactive units at the facility are properly characterized and, if necessary, remediated, especially since many of these closed or inactive units are unlined. Nevertheless, EPA solicits comment on whether EPA should modify the corrective action requirements under section 3004(x) of RCRA. Commenters should specifically address the issue of how other alternatives could be protective without mandating corrective action as needed for all solid waste management units from which there have been releases of hazardous waste or hazardous constituents at the facility.

6. Financial assurance. EPA is also not proposing to modify the existing financial assurance requirements at 40 CFR parts 264/265/267, subpart H. Financial assurance must be adequate to cover the estimated costs of closure and post-closure care (including facility-wide corrective action, as needed), and specific levels of financial assurance are required to cover liability for bodily injury and property damage to third parties caused by sudden accidental occurrences arising from operations of the facility. Allowable financial assurance mechanisms are trust funds, surety bonds, letters of credit, insurance policies, corporate guarantees, and demonstrations and documentation that owners or operators of the facility have sufficient assets to cover closure, post-closure care, and liability. The regulations also require financial assurance for corrective action under section 264.101.

As we have estimated that 53 local governments own and operate coal-fired electric utilities, EPA seeks comment on whether a financial test similar to that in 40 CFR 258.74(f) in the Criteria for Municipal Solid Waste Landfills should be established for local governments that own and operate coal-fired power plants.

7. Permitting requirements. Under the RCRA subtitle C alternative, facilities that manage CCRs (in this case, facilities with landfills and surface impoundments, and other possible management units used to store or dispose of CCRs, or generating facilities that store CCRs destined for off-site disposal) must obtain a permit from EPA or from the authorized state. The effect of EPA's proposed listing would extend these permitting requirements to those facilities managing special wastes regulated under subtitle C of RCRA. Parts 124, 267 and 270 detail the specific procedures for the issuance and modification of permits, including public participation, and through the permit process regulatory agencies impose technical design and management standards of 40 CFR parts 264/267. Facilities with landfills that are in existence on the effective date of the regulation (which in this case would generally be the effective date of the state regulations establishing the federal CCR requirements)—which receive CCRs or actively manage CCRs—are eligible for "interim status" under federal regulations, providing they comply with the requirements of 40 CFR section 270.70. By contrast, facilities with surface impoundments that have not completed closure as outlined in this proposal would be subject to the existing permitting requirements, irrespective of whether they continue to receive CCRs into the unit or to actively manage CCRs. While facilities are in interim status, they are subject to the largely self-implementing requirements of 40 CFR part 265. As noted previously, in a final regulation, EPA would make conforming changes to these parts of the CFR to make it clear that the requirements apply to facilities that manage either hazardous wastes or special wastes regulated under subtitle C.

8. EPA is Not Proposing to Apply the Subtitle C Requirements to CCRs from Certain On-Going State or Federally Required Cleanups. Under the subtitle C alternative, the Agency is proposing to allow state or federally-required cleanups commenced prior to the effective date of the final rule to be completed in accordance with the requirements determined to be appropriate for the specific cleanup. EPA's rationale for this decision is two-fold. First, for state or federally required cleanups that already commenced and are continuing, the state or federal government has entered into an administrative agreement with the facility owner or operator which specifies remedies, clean-up goals, and timelines that were determined to be protective of human health and the environment, based on the conditions at the site. The overseeing Agency will also be able to ensure that the cleanup waste, if sent off-site (which may sometimes be necessary) will go to appropriately designed and permitted facilities. Second, altering the requirements for cleanups currently underway would be disruptive and could cause significant delays in achieving clean-up goals. Once the rule becomes final, EPA or the state will be able to avail themselves of regulations under RCRA designed specifically for cleanup. However, the Agency takes comment on this proposed provision.

D. CERCLA Designation and Reportable Quantities

Under current law and regulations, all hazardous wastes listed under RCRA and codified in 40 CFR 261.31 through 261.33, and special wastes under 261.50 if the proposed special waste listing is finalized, as well as any solid waste that is not excluded from regulation as a hazardous waste under 40 CFR 261.4(b) and that exhibits one or more of the characteristics of a RCRA hazardous waste (as defined in §§ 261.21 through 261.24), are hazardous substances under CERCLA, as amended (*see* CERCLA section 101(14)(C)). CERCLA hazardous substances are listed in Table 302.4 at 40 CFR 302.4 along with their reportable quantities (RQs). If a hazardous substance is released in an amount that equals or exceeds its RQ within a 24-hour period, the release must be reported immediately to the National Response Center (NRC) pursuant to CERCLA section 103.

Thus, under this subtitle C alternative, and as EPA does with any other listed waste, the Agency is proposing to also list CCRs as a CERCLA hazardous substance in Table 302.4 of 40 CFR 302.4. The key constituents of concern in CCRs are already listed as hazardous substances under CERCLA (*i.e.,* arsenic, cadmium, mercury, selenium), and therefore persons who spill or release CCRs already have reporting obligations, depending on the volume of the spill. Typically, under current CERCLA requirements, a person releasing CCRs, for example, would report depending on his estimate of the amount of arsenic or other constituents contained in the release.

Typically, when EPA lists a new waste subject to RCRA subtitle C, the statutory one-pound RQ is applied to the waste. However, EPA is proposing two alternative methods to adjust the

one-pound statutory RQ. The first method, one traditionally utilized by the Agency, adjusts the RQ based on the lowest RQ of the most toxic substance present in the waste. The second method, as part of the Agency's effort to review and re-evaluate its methods for CERCLA designation and RQ adjustment, adjusts the one-pound statutory RQ based upon the Agency's characterization and physical properties of the complex mixtures which comprise the waste to be designated as S001. The Agency invites comment on both methods, and may, based upon these comments and further information, decide to go forward with either method or both methods.

1. Reporting Requirements

Under CERCLA section 103(a), the person in charge of a vessel or facility from which a CERCLA hazardous substance has been released in a quantity that is equal to or exceeds its RQ within a 24-hour period must immediately notify the NRC as soon as that person has knowledge of the release. The toll-free telephone number of the NRC is 1–800–424–8802; in the Washington, DC, metropolitan area, the number is (202) 267–2675. In addition to the reporting requirement under CERCLA, section 304 of the Emergency Planning and Community Right-to-Know Act (EPCRA) requires owners or operators of certain facilities to report releases of extremely hazardous substances and CERCLA hazardous substances to state and local authorities. The EPCRA section 304 notification must be given immediately after the release of an RQ (or more) within a 24-hour period to the community emergency coordinator of the local emergency planning committee (LEPC) for any area likely to be affected by the release and to the state emergency response commission (SERC) of any state likely to be affected by the release.

Under section 102(b) of CERCLA, all hazardous substances (as defined by CERCLA section 101(14)) have a statutory RQ of one pound, unless and until the RQ is adjusted by regulation. In this rule, EPA is proposing to list CCRs that are generated by electric utility and independent power producers that are intended for disposal (and not beneficially used), as special wastes subject to regulation under subtitle C of RCRA. In order to coordinate the RCRA and CERCLA rulemakings with respect to the new special waste listing, the Agency is also proposing adjustments to the one-pound statutory RQs for this special waste stream.

2. Basis for RQs and Adjustments

EPA's methodology for adjusting the RQs of individual hazardous substances begins with an evaluation of the intrinsic physical, chemical, and toxicological properties of each hazardous substance. The intrinsic properties examined, called "primary criteria," are aquatic toxicity, mammalian toxicity (oral, dermal, and inhalation), ignitability, reactivity, chronic toxicity, and potential carcinogenicity.

Generally, for each intrinsic property, EPA ranks the hazardous substance on a five-tier scale, associating a specific range of values on each scale with an RQ value of 1, 10, 100, 1,000, or 5,000 pounds. The data for each hazardous substance are evaluated using the various primary criteria; each hazardous substance may receive several tentative RQ values based on its particular intrinsic properties. The lowest of the tentative RQs becomes the "primary criteria RQ" for that substance.

After the primary criteria RQ are assigned, the substances are further evaluated for their susceptibility to certain degradative processes, which are used as secondary adjustment criteria. These natural degradative processes are biodegradation, hydrolysis, and photolysis (BHP). If a hazardous substance, when released into the environment, degrades relatively rapidly to a less hazardous form by one or more of the BHP processes, its RQ (as determined by the primary RQ adjustment criteria) is generally raised by one level. Conversely, if a hazardous substance degrades to a more hazardous product after its release, the original substance is assigned an RQ equal to the RQ for the more hazardous substance, which may be one or more levels lower than the RQ for the original substance. Table 7 presents the RQ for each of the constituents of concern in CCRs taken from Table 302.4—List of Hazardous Substances and Reportable Quantities at 40 CFR 302.4.

TABLE 7—REPORTABLE QUANTITIES OF CONSTITUENTS OF CONCERN

Hazardous waste No.	Constituent of concern	RQ Pounds (Kg)
S001	Antimony	5000 (2270)
	Arsenic	1 (0.454)
	Barium	No RQ
	Beryllium	10 (4.54)
	Cadmium	10 (4.54)
	Chromium	5000 (2270)
	Lead	10 (4.54)
	Mercury	1 (0.454)
	Nickel	100 (45.4)
	Selenium	100 (45.4)
	Silver	1000 (454)
	Thallium	1000 (454)

The standard methodology used to adjust the RQs for RCRA wastes is based on an analysis of the hazardous constituents of the waste streams. EPA determines an RQ for each hazardous constituent within the waste stream and establishes the lowest RQ value of these constituents as the adjusted RQ for the waste stream. EPA is proposing to use the same methodology to adjust RQs for listed special wastes. In this notice, EPA is proposing a one-pound RQ for listed CCRs based on the one pound RQs for arsenic and mercury (*i.e.,* the two constituents within CCRs with the lowest RQ). In this same rule, however, EPA is also proposing that an alternative method for adjusting the RQ of the CCR wastes also can be used in lieu of the one pound RQ.

3. Application of the CERCLA Mixture Rule to Listed CCR

Although EPA is proposing a one-pound RQ for CCRs listed as a special waste, we are also proposing to allow the owner or operator to use the

maximum observed concentrations of the constituents within the listed CCR wastes in determining when to report releases of the waste.

For listed CCR wastes, where the actual concentrations of the hazardous constituents in the CCRs are not known and the waste meets the S001 listing description, EPA is proposing that persons managing CCR waste have the option of reporting on the basis of the maximum observed concentrations that have been identified by EPA (*see* Table 8 below). Thus, although actual knowledge of constituent concentrations may not be known, assumptions can be made of the concentrations based on the EPA identified maximum concentrations. These assumptions are based on actual sampling data, specifically the maximum observed concentrations of hazardous constituents in CCRs.[143] Table 7 identifies the hazardous constituents for CCRs, their maximum observed concentrations in parts per million (ppm), the constituents' RQs, and the number of pounds of CCRs needed to contain an RQ of each constituent for the CCR to be reported.

TABLE 8—POUNDS REQUIRED TO CONTAIN RQ FOR EACH CONSTITUENT OF LISTED CCR

Waste stream constituent	Maximum ppm	RQ (lbs)	Pounds required to contain RQ
CCR		1	
Antimony	3,100	5,000	1,612,903
Arsenic	773	1	1,294
Barium	7,230	No RQ	No RQ
Beryllium	31	10	322,581
Cadmium	760	10	13,158
Chromium	5,970	5,000	837,521
Lead	1,453	10	6,883
Mercury	384	1	2,604
Nickel	6,301	100	15,871
Selenium	673	100	148,588
Silver	338	1,000	2,958,580
Thallium	100	1,000	10,000,000

For example, if listed CCR wastes are released from a facility, and the actual concentrations of the waste's constituents are not known, it may be assumed that the concentrations will not exceed those listed above in Table 8. Thus, applying the mixture rule, the RQ threshold for arsenic in this waste is 1,294 pounds—that is, 1,294 pounds of listed CCR waste would need to be released to reach the RQ for arsenic. Reporting would be required only when an RQ or more of any hazardous constituent is released.

Where the concentration levels of all hazardous constituents are known, the traditional mixture rule would apply. Under this scenario, if the actual concentration of arsenic is 100 ppm, 10,000 pounds of the listed CCR waste would need to be released to reach the RQ for arsenic. As applied to listed CCR waste, EPA's proposed approach reduces the burden of notification requirements for the regulated community and adequately protects human health and the environment.

The modified interpretation of the mixture rule (40 CFR 302.6) as it applies to listed CCR wastes in this proposal is consistent with EPA's approach in a final rule listing four petroleum refining wastes (K169, K170, K171, and K172) as RCRA hazardous wastes and CERCLA hazardous substances (*see* 63 FR 42110, Aug. 6, 1998). In that rule, the Agency promulgated a change to the regulations and its interpretation of the mixture rule to allow facilities to consider the maximum observed concentrations for the constituents of the petroleum refining wastes in determining when to report releases of the four wastes. EPA codified this change to its mixture rule interpretation in 40 CFR 302.6(b)(1) as a new subparagraph (iii). In another rule, EPA also followed this approach in the final rule listing two chlorinated aliphatic production wastes (K174 and K175) as RCRA hazardous wastes and CERCLA hazardous substances (*see* 65 FR 67068, Nov. 8, 2000). If the proposed subtitle C alternative becomes final, EPA may modify 40 CFR section 302.6(b)(1) to extend the modified interpretation of the mixture rule to include listed CCR wastes.

4. Correction of Table of Maximum Observed Constituent Concentrations Identified by EPA

When the final rule that listed Chlorinated Aliphatics Production Wastes was published in the Code of Federal Regulations (CFR), the existing table that provided the maximum observed constituent concentrations for petroleum refining wastes (K169, K170, K171, and K172) was inadvertently replaced instead of amended to add the maximum observed constituent concentrations for the chlorinated aliphatic production wastes (K174 and K175). Therefore, the Agency is at this time proposing to correct that inadvertent removal of the petroleum refining wastes by publishing a complete table that includes, the petroleum refining wastes, the chlorinated aliphatic production wastes, and now the CCR wastes (*e.g.,* K169, K170, K171, K172, K174, K175, and S001).

E. Listing of CCR as Special Wastes To Address Perceived Stigma Issue

Commenters suggested that the listing of CCRs as a hazardous waste will impose a stigma on their beneficial use, and significantly curtail these uses. EPA questions this assertion, in fact, our experience suggests that the increased costs of disposal of CCRs as a result of regulation of CCRs under RCRA subtitle C would create a strong economic incentive for increased beneficial uses of CCRs. We also believe that the increased costs of disposal of CCRs, as a result of regulation of CCR disposal, but not beneficial uses, should achieve increased usage in non-regulated beneficial uses, simply as a result of the economics of supply and demand. The economic driver—availability of a low-cost, functionally equivalent or often

[143] EPA's CCR constituent concentrations database is available in the docket to this notice.

superior substitute for other raw materials—will continue to make CCRs an increasingly desirable product. Furthermore, it has been EPA's experience in developing and implementing RCRA regulation and elsewhere that material inevitably flows to less regulated applications.

However, with that said, the electric utility industry, the states, and those companies that beneficially use CCRs have nevertheless commented that listing of CCRs as a RCRA subtitle C waste will impose a stigma on their beneficial use and significantly curtail these uses. In their view, even an action that regulates only CCRs destined for disposal as RCRA subtitle C waste, but retains the Bevill exemption for beneficial uses, would have this adverse effect. Finally, the states particularly have commented that, by operation of state law, the beneficial use of CCRs would be prohibited under many states' beneficial use programs, if EPA were to designate CCRs destined for disposal as a RCRA subtitle C waste. Unlike the incentive effect introduced by increased disposal costs in which firms rationally try to avoid higher costs or seek lower cost of raw materials, the idea that there will be a stigma effect rests on an assumption that stigma would alter consumer preferences thereby decreasing end-users' willingness to pay for products that include CCPs. This would have the practical effect of shifting the aggregate CCP demand curve downward.

Some of the other comments that have been made include: (1) Beneficially used CCRs are the same material as that which would be considered hazardous; this asymmetry increases confusion and the probability of lawsuits, however, unwarranted, (2) while the supply of CCRs to be beneficially used may increase given the additional incentives to avoid disposal costs, the consumer demand may decrease as negative perceptions are not always based on reason, (3) any negative impact on beneficial use will require more reliance on virgin materials with higher GHG and environmental footprints, (4) state support may be weakened or eliminated, even in states that are friendly to beneficial use, (5) competitors who use virgin or other materials are taking advantage of the hazardous waste designation by using scare tactics and threats of litigation to get customers to stop using products containing CCRs, (6) customers are already raising questions about the safety of products that contain CCRs, and (7) uncertainty is already hurting business as customers are switching to products where there is less regulatory risk and potential for environmental liabilities. For example, one commenter stated that they have received requests to stop selling boiler slag for ice control due to potential liability.

EPA is concerned about potential stigma and, as we have stated previously, we do not wish to discourage environmentally sound beneficial uses of CCRs. In looking to evaluate this issue, we believe it is first important to understand that the proposed rule (if the subtitle C alternative is finalized) would regulate CCRs under subtitle C of RCRA only if they are destined for disposal in landfills and surface impoundments, and would leave the Bevill determination in effect for the beneficial use of CCRs. That is, the legal status of CCRs that are beneficially used would remain entirely unchanged (*i.e.,* they would not be regulated under subtitle C of RCRA as a hazardous waste, nor subject to any federal non-hazardous waste requirements). EPA is proposing to regulate the disposal of CCRs under subtitle C of RCRA because of the specific nature of disposal practices and the specific risks these practices involve—that is, the disposal of CCRs in (often unlined) landfills or surface impoundments, with millions of tons placed in a concentrated location. The beneficial uses that EPA identifies as excluded under the Bevill amendment, for the most part, present a significantly different picture, and a significantly different risk profile. As a result, EPA is explicitly not proposing to change their Bevill status (although we do take comment on whether "unconsolidated uses" of CCRs need to be subject to federal regulation). (For further discussion of the beneficial use of CCRs, *see* section IV. D in this preamble.)

Furthermore, in today's preamble, we make it clear that certain uses of CCRs—*e.g.,* FGD gypsum in wallboard—do not involve "waste" management at all; rather, the material is a legitimate co-product that, under most configurations, has not been discarded in the first place and, therefore, would not be considered a "solid waste" under RCRA. Moreover, EPA's experience suggests that it is unlikely that a material that is not a waste in the first place would be stigmatized, particularly when used in a consolidated form and while continuing to meet long established product specifications.

In fact, EPA's experience with past waste regulation, and with how hazardous waste and other hazardous materials subject to regulation under subtitle C are used and recycled, suggests that a hazardous waste "label" does not impose a significant barrier to its beneficial use and that non-regulated uses will increase as the costs of disposal increase. There are a number of examples that illustrate these points, although admittedly many of these products are not used in residential settings:

- Electric arc furnace dust is a listed hazardous waste (K061), and yet it is a highly recycled material. Specifically, between 2001 and 2007, approximately 42% to 51% of K061 was recycled (according to Biennial Reporting System (BRS) data). Both currently and historically, it has been used as an ingredient in fertilizer and in making steel, and in the production of zinc products, including pharmaceutical materials. Slag from the smelting of K061 is in high demand for use in road construction.[144] In fact, there is little doubt that without its regulation as a hazardous waste, a significantly greater amount of electric arc further dust would be diverted from recycling to disposal in non-hazardous waste landfills.
- Electroplating wastewater sludge is a listed hazardous waste (F006) that is recycled for its copper, zinc, and nickel content for use in the commercial market. In 2007, approximately 35% of F006 material was recycled (according to BRS data). These materials do not appear to be stigmatized in the marketplace.
- Chat, a Superfund mining cleanup waste with lead, cadmium and zinc contamination, is used in road construction in Oklahoma and the surrounding states.[145] In this case, the very waste that has triggered an expensive Superfund cleanup is successfully offered in the marketplace as a raw material in road building. The alternative costs of disposal in this case are a significant driver in the beneficial use of this material, and the Superfund origin of the material has not served as a barrier to its use.
- Used oil is regulated under RCRA subtitle C standards. While used oil that is recycled is subject to a separate set of standards under subtitle C (and is not identified as a hazardous waste), "stigma" does not prevent home do-it-yourselfers from collecting used oil, or automotive shops from accepting it and sending it on for recovery. Collected used oil may be re-refined, reused, or used as fuel in boilers, often at the site

[144] According to the most recently available data, in 2008 *Horsehead* produced about 300,000 tons per year of an Iron-Rich Material (IRM) as a by-product of its dust recycling process, and in 2009 *Inmetco* produced close to 20,000 tons per year. PADEP asserts that these plants cannot meet the demands for use of the slag by PennDOT.

[145] 40 CFR part 260, 39331–39353.

where it is collected. Safety Kleen reported that in 2008, the company recycled 200 million gallons of used oil. (This example is almost directly analogous to the situation with respect to CCRs, although for CCRs, we are not proposing to subject them to any management standards when used or recycled, but, as in the case of used oil, this alternative would avoid labeling CCR's as "hazardous waste," even while relying on subtitle C authority.)

- Spent etchants are directly used as ingredients in the production of a copper micronutrient for livestock; and
- Spent solvents that are generated from metals parts washing and are generally hazardous wastes before reclamation are directly used in the production of roofing shingles.

Furthermore, common products and product ingredients routinely used at home (*e.g.,* motor oil; gasoline; many common drain cleaners and household cleaners; and cathode ray tube monitors for TVs and computers) are hazardous wastes in other contexts. This includes fluorescent lamps (and CFLs) which are potentially hazardous because of mercury. Consumers are generally comfortable with these products, and their regulatory status does not discourage their use. Given this level of acceptance, EPA questions whether CCR-based materials that might be used in the home, like concrete or wallboard, would be likely to raise concerns where they are safely incorporated into a product.

Certain commenters have also expressed the concern that standards-setting organizations might prohibit the use of CCRs in specific products or materials in their voluntary standards. Recently, chairpersons of the American Standards and Testing Materials (ASTM) International Committee C09, and its subcommittee, C09.24, in a December 23, 2009 letter indicated that ASTM would remove fly ash from the project specifications in its concrete standard if EPA determined that CCRs were a hazardous waste when disposed. However, it remains unclear whether ASTM would ultimately adopt this position, in light of EPA's decision not to revise the regulatory status of CCRs destined for beneficial use. Further ASTM standards are developed through an open consensus process, and they currently apply to the use of numerous hazardous materials in construction and other activities. For example, ASTM provides specifications for the reuse of solvents and, thus, by implication, does not appear to take issue with the use of these recycled secondary materials, despite their classification as hazardous wastes.[146]

Others take a different view on how standard-setting organizations will react. Most notably, a U.S. Green Building Council representative was referenced in the New York Times as saying that LEED incentives for using fly ash in concrete would remain in place, even under an EPA hazardous waste determination.[147] If the Green Building Council (along with EPA) continues to recognize fly ash as an environmentally beneficial substitute for Portland cement, the use of this material is unlikely to decrease solely because of "stigma" concerns. Additionally, we believe it is unlikely that ASTM will prohibit the use of fly ash in concrete under its standards solely because of a determination that fly ash is regulated under subtitle C of RCRA when it is discarded, especially given that this use of fly ash is widely accepted throughout the world as a practice that improves the performance of concrete, it is one of the most cost-effective near-term strategies to reduce GHG emissions, and there is no evidence of meaningful risk, nor any reason to think there might be, involved with its use in cement or concrete.

Finally, many states commented that their statutes or regulations prohibit the use of hazardous wastes in their state beneficial use programs and, therefore, that if EPA lists CCRs as hazardous wastes (even if only when intended for disposal), their use would be precluded in those states. EPA reviewed the regulations of ten states with the highest consumption of fly ash and concluded that, while these states do not generally allow the use of hazardous waste in their beneficial use programs, this general prohibition would not necessarily prohibit the beneficial use of CCRs under the proposal that EPA outlines in this rule. Beneficially used CCRs would remain Bevill-exempt solid wastes, or in some cases, would not be considered wastes at all and thus, the legal status of such CCRs may not be affected by EPA's proposed RCRA subtitle C rule. As an example, the use of slag derived from electric furnace dust (K061) is regulated under Pennsylvania's beneficial use program, despite the fact that it is derived from a listed hazardous waste. However, we are also aware that, in the case of Florida, its state definition of hazardous waste would likely prohibit the beneficial use of CCRs were the co-proposed RCRA subtitle C regulation finalized and were there no change to Florida's definition of hazardous waste.

The primary concern raised by these commenters is the fact that CCRs would be labeled a "hazardous waste" (even if only when disposed) and will change the public perception of products made from CCRs. To address this concern, EPA is proposing, as one alternative, to codify the listing in a separate, unique section of the regulations. Currently, hazardous wastes are listed in 40 CFR 261, Subpart D, which identifies the currently regulated industrial wastes, and which is labeled, "Lists of Hazardous Wastes." EPA would create a new Subpart F and label the section as "List of Special Wastes Subject to Subtitle C," to distinguish it from the industrial hazardous wastes. The regulations would identify CCRs as a "Special Waste" rather than a K-listed hazardous waste, so that CCRs would not automatically be identified with all other hazardous wastes. *See* sections V through VII for the full description of our regulatory proposal.

EPA believes that this action could significantly reduce the likelihood that products made from or containing CCRs would automatically be perceived as universally "hazardous." When taken in combination with (1) the fact that beneficially used CCRs will remain exempt and (2) EPA's continued promotion of the beneficial use of CCRs, we believe this will go a long way to address any stigmatic impact that might otherwise result from the regulation of CCRs under subtitle C of RCRA. We are seeking comment on other suggestions on how EPA might promote the beneficial use of CCRs, as well as suggestions that would reduce any perceived impacts resulting from "stigma" due to the identification of CCRs as "special wastes regulated under subtitle C authority."

In summary, based on our experiences, we expect that it will be more likely that the increased costs of disposal of CCRs as a result of regulation of CCR disposal under subtitle C would increase their usage in non-regulated beneficial uses, simply as a result of the economics of supply and demand. The economic driver—availability of a low-cost, functionally equivalent or often superior substitute for other raw materials—would continue to make CCRs an increasingly desirable product.

[146] *See,* for example, ASTM Volume 15.05, Engine Coolants, Halogenated Organic Solvents and Fire Extinguishing Agents; Industrial and Specialty Chemicals, at *http://www.normas.com/ASTM/BOS/volume1505.html. See also* ASTM D5396—04 Standard Specification for Reclaimed Perchloroethylene, at *http://www.astm.org/Standards/D5396.htm.*

[147] *See http://www.nytimes.com/gwire/2020/01/13/13greenwire-recycling-questions-complicate-epa-coal-ash-de-90614.html.*

VII. How would the proposed subtitle c requirements be implemented?

A. Effective Dates

If EPA were to finalize the subtitle C regulatory alternative proposed today, the rule, as is the case with all RCRA subtitle C rules, would become effective six months after promulgation by the appropriate regulatory authority—that is, six months after promulgation of the federal rule in States and other jurisdictions where EPA implements the hazardous waste program (Iowa, Alaska, Indian Country, and the territories, except Guam) and in authorized States, six months after the State promulgates its regulations that EPA has approved via the authorization process (unless State laws specify an alternative time). This means that facilities managing CCRs must be in compliance with the provisions of these regulations on their effective date, unless the compliance date is extended. For this proposed regulatory alternative, the compliance dates for several of the proposed requirements for existing units are being extended due to the need for additional time for facilities to modify their existing units. The precise dates that facilities will need to be in compliance with the various requirements will depend on whether they are in a jurisdiction where EPA administers the RCRA subtitle C program or whether they are in a State authorized to administer the RCRA subtitle C program.

To summarize, (1) In States and jurisdictions where EPA administers the RCRA program (Iowa, Alaska, the territories [except Guam], and Indian Country), most of the subtitle C requirements go into effect and are enforceable by EPA six months after promulgation of the final rule. This includes the generator requirements, transporter requirements, including the manifest requirements, permitting requirements for facilities managing CCRs, interim status standards, surface impoundment stability requirements, and the Land Disposal Restriction (LDR) treatment standards for non-wastewaters in 40 CFR part 268. However, we are proposing that existing CCR landfills and surface impoundments (as defined in this regulation) will be given additional time to comply with several of the proposed requirements as specified later in this section. Any new CCR landfills, including lateral expansions (as defined in the regulation), must be in compliance with all the requirements of any final regulation before CCRs can be placed in the unit.

(2) In States that are authorized to administer the RCRA program, the requirements that are part of the RCRA base program (*i.e.,* those promulgated under the authority of RCRA and not the HSWA amendments) will not be effective until the State develops and promulgates its regulations. Once those regulations are effective in the States, they are enforceable as a matter of State law and facilities must comply with those requirements under the schedule established by the State. These RCRA base requirements will become part of the RCRA authorized program and enforceable as a matter of federal law once the State submits and EPA approves a modification to the State's authorized program. (*See* the State Authorization section (section VIII) for a more detailed discussion.) The requirements that are more stringent or broader in scope than the existing regulations and are promulgated pursuant to HSWA authority will become effective and federally enforceable on the effective date of the approved state law designating CCRs as a special waste subject to subtitle C—that is, they are federally enforceable without waiting for authorization of the program revision applicable to the HSWA provisions. On the other hand, any requirements that are promulgated pursuant to HSWA authority, but are less stringent than the existing subtitle C requirements (*e.g.,* modifications promulgated pursuant to Section 3004(x)) will become effective only when the State promulgates those regulations (and federally enforceable when the State program revision is authorized), as the State has the discretion to not adopt those less stringent requirements.

B. What are the requirements with which facilities must comply?

It is EPA's intention that this proposed alternative, if finalized, will be implemented in the same manner as previous regulations under RCRA subtitle C have been. The following paragraphs describe generally how this proposal will be implemented. While this notice provides some details on specific requirements, it is EPA's intention that, unless otherwise noted, all current Subtitle C requirements become applicable to the facilities generating, transporting, or treating, storing or disposing of CCRs listed as special wastes. While in this notice EPA has described the major subtitle C requirements, EPA has not undertaken a comprehensive description of all of the subtitle C regulatory requirements which may be applicable; therefore, we encourage commenters to refer to the regulations at 40 CFR parts 260 to 268, 270 to 279, and 124 for details.

1. Generators and Transporters

i. Requirements

Under this proposed regulation, regulated CCRs destined for disposal become a newly listed special waste subject to the subtitle C requirements. Persons that generate this newly identified waste is required to notify EPA within 90 days after the wastes are identified or listed [148] (by EPA or the state) and obtain an EPA identification number if they do not already have one in accordance with 40 CFR 262.12. (If the person who generates regulated CCRs already has an EPA identification number, EPA is proposing not to require that they re-notify EPA; however, EPA is seeking comment on this issue.) Moreover, on the effective date of this rule in the relevant state, generators of CCRs must be in compliance with the generator requirements set forth in 40 CFR part 262. These requirements include standards for waste determination (40 CFR 262.11), compliance with the manifest (40 CFR 262.20 to 262.23), pre-transport procedures (40 CFR 262.30 to 262.34), generator accumulation (40 CFR 262.34), record keeping and reporting (40 CFR 262.40 to 262.44), and the import/export procedures (40 CFR 262.50 to 262.60). It should be noted that the current generator accumulation provisions of 40 CFR 262.34 allow generators to accumulate hazardous wastes without obtaining interim status or a permit only in units that are container accumulation units, tank systems or containment buildings; the regulations also place a limit on the maximum amount of time that wastes can be accumulated in these units. If these wastes are managed in landfills, surface impoundments or other units that are not tank systems, containers, or containment buildings, these units are subject to the permitting requirements of 40 CFR parts 264, 265, and 267 and the generator is required to obtain interim status and seek a permit (or modify interim status or a permit, as appropriate). These requirements would be applied to special wastes as well. Permit requirements are described in Section VII.D below.

Transporters of CCRs destined for disposal will be transporting a special waste subject to subtitle C on the effective date of this regulation. Persons who transport these newly identified wastes will be required to obtain an EPA identification number as described

[148] *See* section 3010 of RCRA.

above and must comply with the transporter requirements set forth in 40 CFR part 263 on the effective date of the final rule. In addition, generators and transporters of CCRs destined for disposal should be aware that an EPA identified waste subject to the EPA waste manifest requirements under 40 CFR part 262 meets the definition for a hazardous material under the Department of Transportation's Hazardous Materials Regulations (HMR; 49 CFR parts 171–180) and must be offered and transported in accordance with all applicable HMR requirements, including materials classification, packaging, and hazard communication.[149]

ii. Effective Dates and Compliance Deadlines

Generators must notify EPA within 90 days after the date that CCRs are identified or listed as special wastes (by EPA or the state). The other requirements for generators and transporters (in 40 CFR parts 262 and 263) are effective and generators and transporters must be in compliance with these requirements on the effective date of the final rules. The effective date of these rules is six months after promulgation of the federal rule in non-authorized States and in authorized States generally six months after promulgation of the State regulations. (*See* previous section for a more detailed discussion of effective dates.)

2. Treatment, Storage, and Disposal Facilities (TSDs)

i. Requirements

Facilities treating, storing, or disposing of the newly listed CCRs are subject to the RCRA 3010 notification requirements, the permit requirements in 40 CFR part 270, and regulations in 40 CFR part 264 or 267 for permitted facilities or part 265 for interim status facilities, including the general facility requirements in subpart B, the preparedness and prevention requirements in subpart C, the contingency plan and emergency procedure requirement in subpart D, the manifest, recordkeeping and reporting requirements in subpart E, the closure and post-closure requirements in subpart G, the corrective action requirements, including facility-wide corrective action in subpart F, and the financial assurance requirements in subpart H.

[149] *See* the definition for "hazardous waste" in 49 CFR 171.8.

C. RCRA Section 3010 Notification

Pursuant to RCRA section 3010 and 40 CFR 270.1(b), facilities managing these special wastes subject to subtitle C must notify EPA of their waste management activities within 90 days after the wastes are identified or listed as a special waste. (As noted above, for facilities in States where EPA administers the program, this will be 90 days from the date of promulgation of the final federal regulation; in authorized States, it will be 90 days from the date of promulgation of listing CCRs as a special waste by the state, unless the state provides an alternative timeframe.) This requirement may be applied even to those TSDs that have previously notified EPA with respect to the management of hazardous wastes. The Agency is proposing to waive this notification requirement for persons who handle CCRs and have already: (1) Notified EPA that they manage hazardous wastes, and (2) received an EPA identification number because requiring persons who have notified EPA and received an EPA identification number would be duplicative and unnecessary, although the Agency requests comment on whether it should require such persons to re-notify the Agency that they generate, transport, treat, store or dispose of CCRs. However, any person who treats, stores, or disposes of CCRs and has not previously received an EPA identification number for other waste must obtain an identification number pursuant to 40 CFR 262.12 to generate, transport, treat, store, or dispose of CCRs within 90 days after the wastes are identified or listed as special wastes subject to subtitle C, as described above.

D. Permit Requirements

As specified in 40 CFR 270.1(b), six months after promulgation of a new regulation, the treatment, storage or disposal of hazardous waste or special waste subject to subtitle C by any person who has not applied for and received a RCRA permit is prohibited from managing such wastes. Existing facilities, however, may satisfy the permit requirement by submitting Part A of the permit application. Timely submission of Part A and the notification qualifies a facility for interim status under section 3005 of RCRA and facilities with interim status are treated as having been issued a permit until a final decision is made on a permit application.

The following paragraphs provide addition details on how the permitting requirements would apply to various categories of facilities:

1. Facilities Newly Subject to RCRA Permit Requirements

Facilities that treat, store, or dispose of regulated CCRs at the time the rule becomes effective would generally be eligible for interim status pursuant to section 3005 of RCRA. (*See* section 3005(e)(1)(A)(ii) of RCRA).[150] EPA believes most, if not all utilities generating CCRs and most if not all off-site disposal sites will be in this situation. In order to obtain interim status based on treatment, storage, or disposal of such newly listed CCRs, eligible facilities are required to comply with 40 CFR 270.70(a) and 270.10(e) (or more likely with analogous state regulations) by providing notice under RCRA section 3010 (if they do not have an EPA identification number) and submitting a Part A permit application no later than six months after date of publication of the regulations which first require them to comply with the standards. (In most cases, these would be the state regulations implementing the federal program; however, in those States and jurisdictions where EPA implements the program, the deadline will be six months after promulgation of the final federal rule.) Such facilities are subject to regulation under 40 CFR part 265 until EPA or the state issues a RCRA permit. In addition, under section 3005(e)(3) and 40 CFR 270.73(d), not later than 12 months after the effective date of the regulations that render the facility subject to the requirement to have a RCRA permit and which is granted interim status, land disposal facilities newly qualifying for interim status under section 3005(e)(1)(A)(ii) also must submit a Part B permit application and certify that the facility is in compliance with all applicable ground water monitoring and financial responsibility requirements. If the facility fails to submit these certifications and the Part B permit application, interim status will terminate on that date.

2. Existing Interim Status Facilities

EPA is not aware of any utilities or CCR treatment or disposal sites in RCRA interim status currently, and therefore

[150] Section 3005(e) of RCRA states, in part, that "Any person who * * * is in existence on the effective date of statutory or regulatory changes under this Act that render the facility subject to the requirement to have a permit under this section * * * shall be treated as having been issued such permit until such time as final administrative disposition of such application is made, unless the Administrator or other plaintiff proves that final administrative disposition of such application has not been made because of the failure of the applicant to furnish information reasonably required or requested in order to process the application.

EPA does not believe the standard federal rules on changes in interim status will apply. However, in case such a situation exists, EPA describes below the relevant provisions. Again, EPA is describing the federal requirements, but because the proposed requirements that subject these facilities to permitting requirements are part of the RCRA base program, authorized state regulations will govern the process, and the date those regulations become effective in the relevant state will trigger the process.

Pursuant to 40 CFR 270.72(a)(1), all existing hazardous waste management facilities (as defined in 40 CFR 270.2) that treat, store, or dispose of newly identified hazardous wastes and are currently operating pursuant to interim status under section 3005(e) of RCRA, must file an amended Part A permit application with EPA no later than the effective date of the final rule in the State where the facility is located. By doing this, the facility may continue managing the newly listed wastes. If the facility fails to file an amended Part A application by such date, the facility will not receive interim status for management of the newly listed wastes (in this case CCRs) and may not manage those wastes until the facility receives either a permit or a change in interim status allowing such activity (40 CFR 270.10(g)). This requirement, if applicable to any electric utilities, will be applied to those facilities managing CCRs destined for disposal since these facilities will now be managing CCRs subject to the subtitle C requirements.

3. Permitted Facilities

EPA also believes that no electric utilities treating, storing, or disposing of CCRs currently has a RCRA permit for its CCR management unit(s), nor is EPA aware of any on-going disposal of CCRs at permitted hazardous waste TSDs, although the latter situation is a possibility. Federal procedures for how permitted hazardous waste facilities manage newly listed hazardous wastes are described below, but again in practice (with the exception of those jurisdictions in which EPA administers the hazardous waste program), the authorized state regulations will govern the process.

Under 40 CFR 270.42(g), facilities that already have RCRA permits must request permit modifications if they want to continue managing the newly listed wastes (*see* 40 CFR 270.42(g) for details). This provision states that a permittee may continue managing the newly listed wastes by following certain requirements, including submitting a Class 1 permit modification request on or before the date on which the waste or unit becomes subject to the new regulatory requirements (*i.e.,* the effective date of the final federal rule in those jurisdictions where EPA administers the program or the effective date of the State rule in authorized States), complying with the applicable standards of 40 CFR parts 265 and 266 and submitting a Class 2 or 3 permit modification request within 180 days of the effective date of the final rule. Again, these requirements, if applicable to any electric utilities, will be applied to those facilities managing CCRs destined for disposal since they are now subject to the subtitle C requirements.

E. Requirements in 40 CFR Parts 264 and 265

The requirements of 40 CFR part 264 and 267 for permitted facilities or part 265 for interim status facilities, including the general facility standards in subpart B, the preparedness and prevention requirements in subpart C, the contingency plan and emergency procedure requirements in subpart D, the manifest, recordkeeping and reporting requirements in subpart E, the corrective action requirements, including facility-wide corrective action in subpart F, and the financial assurance requirements in Subpart H, are applicable to TSDs and TSDs must be in compliance with those requirements on the effective date of the final (usually state) regulation, except as noted below. These requirements will apply to those facilities managing CCRs destined for disposal.

Moreover, all units in which newly identified hazardous wastes are treated, stored, or disposed of after the effective date of the final (usually state) rule that are not excluded from the requirements of 40 CFR parts 264, 265 and 267 will be subject to both the general closure and post-closure requirements of subpart G of 40 CFR parts 264 and 265 and the unit-specific closure requirements set forth in the applicable unit technical standards in subparts 40 CFR parts 264 or 265 (*e.g.,* subpart N for landfill units). In addition, EPA promulgated a final rule that allows, under limited circumstances, regulated landfills or surface impoundments, (or land treatment units which is not used for the management of CCR waste) to cease managing hazardous waste, but to delay subtitle C closure to allow the unit to continue to manage non-hazardous waste for a period of time prior to closure of the unit (*see* 54 FR 33376, August 14, 1989). Units for which closure is delayed continue to be subject to all applicable 40 CFR parts 264 and 265 requirements. Dates and procedures for submittal of necessary demonstrations, permit applications, and revised applications are detailed in 40 CFR 264.113(c) through (e) and 265.113(c) through (e). As stated earlier, these requirements will be applicable to those facilities managing CCRs destined for disposal, since they will be managing a newly listed waste subject to subtitle C requirements.

Except as noted below, existing facilities are required to be in compliance with the surface impoundment stability requirements, the LDR treatment standards for non-wastewaters, and the fugitive dust controls on the effective date of the final rule.

For certain of the other requirements, existing facilities will have:

(a) 60 days from the effective date of the final rule to install a permanent identification marker on each surface impoundment as required by 40 CFR 264.1304(d) and 40 CFR 265.1304(d).

(b) 1 year from the effective date of the final rule:

To submit plans for each surface impoundments as required by 264.1304(b) and 265.1304(b).

To adopt and submit to the Regional Administrator a plan for carrying out the inspection requirements for each surface impoundment in 40 CFR 264.1305 and 40 CFR 265.1305.

To comply with the groundwater monitoring requirements for each landfill and surface impoundment in 40 CFR 264, Subpart F and 265, Subpart F.

(c) 2 years from the effective date of the final rule:

To install, operate, and maintain run-on and run-off controls as required by 264.1304(g) and 265.1304(g) for surface impoundments and by 264.1307(d) and 265.1307(d) for landfills.

(d) 5 years from the effective date of the final rule:

To comply with the LDR wastewater treatment standard.

To stop receiving CCR waste in surface impoundments.

(e) 7 years from the effective date of the final rule to close surface impoundments handling CCRs.

Any new CCR landfills, including lateral expansions of existing landfills (as defined in the regulation), must be in compliance with all the requirements of the final regulation before CCRs can be placed in the unit.

The table below (Table 9) provides a summary of the effective dates for the various requirements:

TABLE 9—CCR RULE REQUIREMENTS

	Compliance date non authorized state	Compliance date authorized state
Remove Bevill Exclusion	6 months after promulgation of final rule	6 months after State adopts regulations (under State law); federally enforceable when state program revision is authorized.
Listing CCRs as a Special Waste Subject to subtitle C.	Same	Same.
Notification (generators and TSDs)	90 days after rule promulgation (that is, the date the CCRs are listed as a Special Waste subject to subtitle C.	90 days after State rule promulgation (that is, the date the CCRs are listed as a Special Waste subject to subtitle C.
Generator requirements (40 CFR part 262)	6 months after promulgation	On the effective date of the State regulations.
Transporter Requirements (40 CFR part 263)	6 months after promulgation	On the effective date of State regulations.
Permit Requirement/Interim Status	File Part A of the permit application within six months of effective date of final rule.	File Part A of the permit application within six months of effective date of State final rule.
Facility Standards in Part 264/265	On effective date unless specifically noted	On effective date of state regulation unless specifically noted.
Install a permanent identification marker on each surface impoundment as required by 40 CFR 264.1304(d) and 40 CFR 265.1304(d).	60 days from the effective date of the final rule.	60 days from the effective date of the State regulation.
Submit plans required by 264.1304(b) and 265.1304(b).	1 year from the effective date of the final rule	1 year from the effective date of the State regulation.
Adopt and submit to the Regional Administrator a plan for carrying out the inspection requirements in 40 CFR 264.1305 and 40 CFR 265.1305.	1 year from the effective date of the final rule	1 year from the effective date of the State regulation.
Comply with ground water monitoring requirements in 40 CFR 264 Subpart F and 40 CFR 265 Subpart F.	1 year from the effective date of the final rule	1 year from the effective date of the State regulation.
Install, operate, and maintain run-on and run-off controls as required by 264.1304 (g) and 265.1304 (g) for surface impoundments and by 264.1307 (d) and 265.1307 (d) for landfills.	2 years from the effective date of the final rule	2 years from the effective date of the State regulation.
Comply with the LDR wastewater treatment standard.	5 years from the effective date of the final rule	5 years from the effective date of the State regulation.
Close surface impoundments receiving CCR waste.	7 years from the effective date of the final rule	7 years from the effective date of the State regulation.

VIII. Impacts of a Subtitle C Rule on State Authorization

A. Applicability of the Rule in Authorized States

Under section 3006 of RCRA, EPA authorizes qualified states to administer their own hazardous waste programs in lieu of the federal program within the state. Following authorization, EPA retains enforcement authority under sections 3008, 3013, and 7003 of RCRA, although authorized states have primary enforcement responsibility. The standards and requirements for state authorization are found at 40 CFR part 271.

Prior to enactment of the Hazardous and Solid Waste Amendments of 1984 (HSWA), a state with final RCRA authorization administered its subtitle C hazardous waste program in lieu of EPA administering the federal program in that state. The federal requirements no longer apply in the authorized state, and EPA could not issue permits for any facilities in that state, since only the state was authorized to issue RCRA permits. When new, more stringent federal requirements are promulgated, the state was obligated to enact equivalent authorities within specified time frames (one to two years). The new more stringent federal requirements did not take effect in the authorized state until the state adopted the federal requirements as state law, and the state requirements are not federally enforceable until EPA authorized the state program. This remains true for all of the requirements issued pursuant to statutory provisions that existed prior to HSWA.

In contrast, under RCRA section 3006(g) (42 U.S.C. 6926(g)), which was added by HSWA, new requirements and prohibitions imposed under HSWA authority take effect in authorized states at the same time that they take effect in unauthorized states. EPA is directed by the statute to implement these requirements and prohibitions in authorized states, until the state is granted authorization to do so. While states must still adopt new more stringent HSWA related provisions as state law to retain final authorization, EPA implements the HSWA provisions in authorized states until the states do so.

Authorized states are required to modify their programs only when EPA enacts federal requirements that are more stringent or broader in scope than the existing federal requirements. RCRA section 3009 allows the states to impose standards more stringent than those in the federal program (*see* also 40 CFR 271.1). Therefore, authorized states may, but are not required to, adopt federal regulations, both HSWA and non-HSWA, that are considered less stringent than previous federal regulations.

This alternative of the co-proposal is considered more stringent and broader in scope than current federal regulations and therefore States would be required to adopt regulations and modify their programs if this alternative is finalized.

B. Effect on State Authorization

If finalized, a subtitle C rule for CCRs would affect state authorization in the same manner as any new RCRA subtitle C requirement; *i.e.,* (1) this alternative of the co-proposal would be considered broader in scope and more stringent than the current federal program, so authorized states must adopt regulations so that their program remains at least as stringent as the federal program; and (2) they must receive authorization from

EPA for these program modifications. The process and requirements for modification of state programs at 40 CFR 271, specifically 271.21, will be used.

However, this process is made more complex due to the nature of this particular rulemaking and the fact that some of the provisions of this alternative, if finalized, would be finalized pursuant to the RCRA base program authority and some pursuant to HSWA authority. For RCRA base program or non-HSWA requirements, the general rule, as explained previously, is that the new requirements do not become enforceable as a matter of federal law in authorized states until states adopt the regulations, modify their programs, and receive authorization from EPA. For HSWA requirements, the general rule is that HSWA requirements are enforceable on the effective date of the final federal rule. If an authorized State has not promulgated regulations, modified their programs, and received authorization from EPA, then EPA implements the requirements until the State receives program authorization.

In accord with 271.2(e)(2), authorized states must modify their programs by July 1 of each year to reflect changes to the federal program occurring during the "12 months preceding the previous July 1." Therefore, for example, if the federal rule is promulgated in December 2011, the states would have until July 1, 2013 to modify their programs. States may have an additional year to modify their programs if an amendment to a state statute is needed. *See* 40 CFR 271.21(e)(2)(v).

As noted above, this alternative to the co-proposal is proposed pursuant in part to HSWA authority and in part to non-HSWA or RCRA base program authority. The majority of this alternative is proposed pursuant to non-HSWA authority. This includes, for example, the listing of CCRs destined for disposal as a special waste subject to subtitle C and the impoundment stability requirements. These requirements will be applicable on the effective date of the final federal rule only in those states that do not have final authorization for the RCRA program. These requirements will be effective in authorized states once a state promulgates the regulations and they will become a part of the authorized RCRA program and thus federally enforceable, once the state has submitted a program modification and received authorization for this program modification.

The prohibition on land disposal unless CCRs meet the treatment standards and modification of the treatment standards in 40 CFR part 268 are proposed pursuant to HSWA authority and would normally be effective and federally enforceable in all States on the effective date of the final federal rule. However, because the land disposal restrictions apply to those CCRs that are regulated under subtitle C, until authorized states revise their programs and become authorized to regulate CCRs as a special waste subject to RCRA subtitle C, the land disposal restriction requirements would apply only in those States that currently do not exclude CCRs from subtitle C regulation (that is, CCRs are regulated under subtitle C if they exhibit one or more of the characteristics) and the CCRs in fact exhibit one or more of the RCRA subtitle C characteristics. However, once the state has the authority to regulate CCRs as a special waste, the LDR requirements become federally enforceable in all States.

In addition, the tailored management standards promulgated pursuant to section 3004(x) of RCRA are also proposed pursuant to HSWA authority. However, as these tailored standards are less stringent than the existing RCRA subtitle C requirements, States would not be required to promulgate regulations for these less stringent standards—should a State decide not to promulgate such regulations, the facilities in that state would be required to comply with the full subtitle C standards. Therefore, the tailored management standards will be effective in authorized States only when States promulgate such regulations.

Therefore, the Agency would add this rule to Table 1 in 40 CFR 271.1(j), if this alternative to the co-proposal is finalized, which identifies the federal program requirements that are promulgated pursuant to HSWA and take effect in all states, regardless of their authorization status. Table 2 in 40 CFR 271.1(j) would be modified to indicate that these requirements are self-implementing. Until the states receive authorization for the more stringent HSWA provisions, EPA would implement them, as described above. In implementing the HSWA requirements, EPA will work closely with the states to avoid duplication of effort. Once authorized, states adopt an equivalent rule and receive authorization for such rule from EPA, the authorized state rule will apply in that state as the RCRA subtitle C requirement in lieu of the equivalent federal requirement.

IX. Summary of the Co-Proposal Regulating CCRs Under Subtitle D Regulations

A. Overview and General Issues

EPA is co-proposing and is soliciting comment on an approach under which the May 2000 Regulatory Determination would remain in place, and EPA would issue regulations governing the disposal of CCRs under sections 1008(a), 2002, 4004 and 4005(a) of RCRA (*i.e.,* "Subtitle D" of RCRA). Under this approach, the CCRs would remain classified as a non-hazardous RCRA solid waste, and EPA would develop national minimum criteria governing facilities for their disposal. EPA's co-proposed subtitle D minimum criteria are discussed below.

Statutory standards for Subtitle D approach. Under RCRA 4005(a), upon promulgation of criteria under 1008(a)(3), any solid waste management practice or disposal of solid waste which constitutes the "open dumping" of solid waste is prohibited. The criteria under RCRA 1008(a)(3) are those that define the act of open dumping, and are prohibited under 4005(a), and the criteria under 4004(a) are those to be used by states in their planning processes to determine which facilities are "open dumps" and which are "sanitary landfills." EPA has in practice defined the two sets of criteria identically. *See, e.g.,* Criteria for Classification of Solid Waste Disposal Facilities and Practices, 44 FR 53438, 53438–39 (Sept. 13, 1979). EPA has designed today's co-proposed subtitle D criteria to integrate with the existing open dumping criteria in this respect, as reflected in the proposed changes to 257.1.

Section 4004(a) of RCRA provides that EPA shall promulgate regulations containing criteria distinguishing which facilities are to be classified as sanitary landfills and which are open dumps. This section provides a standard that varies from that under RCRA subtitle C. Specifically, subtitle C provides that management standards for hazardous waste treatment, storage, and disposal facilities are those "necessary to protect human health or the environment." *See, e.g.,* RCRA 3004(a). By contrast, Section 4004(a) provides that

> *[a]t a minimum,* the such criteria shall provide that a facility may be classified as a sanitary landfill and not an open dump only if there is *no reasonable probability of adverse effects on health or the environment* from disposal of solid waste at such facility. Such regulations may provide for the classification of the types of sanitary landfills.

Thus, under the RCRA subtitle D regulatory standard in 4004, EPA is to

develop requirements based on the adverse effects on health or the environment from disposal of solid waste at a facility, and accordingly, EPA looked at such effects in developing today's co-proposed Subtitle D rule.

At the same time, EPA believes that the differing standards, in particular the reference to the criteria as those which are needed to assure that there is "no reasonable probability" of adverse effects, allows the Agency the ability to adopt standards different from those required under the subtitle C proposal where appropriate. EPA notes that the 4004(a) standard refers to the "probability" of adverse effect on health or the environment. In EPA's view, this provides it the discretion to establish requirements that are less certain to eliminate a risk to health or the environment than otherwise might be required under Subtitle C, and allows additional flexibility in how those criteria may be applied to facilities. At the same time, however, EPA notes that the requirements meeting the "no reasonable probability" standard are those "at a minimum"—thus, EPA is not constrained to limit itself to that standard should it determine that additional protections are appropriate.

Statements in the legislative history of 4004(a) are also consistent with EPA's interpretation of the statutory language. While it provides little in the way of guidance on the meaning of the "reasonable probability" standard, the legislative history does indicate that Congress was aware of effects from solid waste disposal facilities that included surface runoff, leachate contamination of surface- and groundwaters, and also identified concerns over the location and operations of landfills. *See* H. Rep. 94–1491, at 37–8. In addition, the legislative history confirms that the standard in 4004(a) was intended to set a minimum for the criteria. *See* H. Rep. 94–1491, at 40 ("This legislation requires that the Administrator define sanitary landfill as disposal site at which there is no reasonable chance of adverse effects on health and the environment from the disposal of discarded material at the site. *This is a minimum requirement of this legislation and does not preclude additional requirements.*" Emphasis added.)

1. Regulatory Approach

In developing the proposed RCRA subtitle D option for CCRs, EPA considered a number of existing requirements as relevant models for minimum national standards for the safe disposal of CCRs. The primary source was the existing requirements under 40 CFR part 258, applicable to municipal solid waste landfills, which provide a comprehensive framework for all aspects of disposal in land-based units, such as CCR landfills. Based on the Agency's substantial experience with these requirements, EPA believes that the part 258 criteria represent a reasonable balance between ensuring the protection of human health and the environment from the risks of these wastes and the practical realities of facilities' ability to implement the criteria. The engineered structures regulated under part 258 are very similar to those found at CCR disposal facilities, and the regulations applicable to such units would be expected to address the risks presented by the constituents in CCR wastes. Moreover, CCR wastes do not contain the constituents that are likely to require modification of the existing part 258 requirements, such as organics; for example, no adjustments would be needed to ensure that groundwater monitoring would be protective, as the CCR constituents are all readily distinguishable by standard analytical chemistry. As discussed throughout this preamble, each of the provisions adopted for today's subtitle D co-proposal relies, in large measure, on the record EPA developed to support the 40 CFR part 258 municipal solid waste landfill criteria, along with the other record evidence specific to CCRs, discussed throughout the co-proposed subtitle C alternative. EPA also relied on the Agency's Guide for Industrial Waste Management (EPA530–R–03–001, February 2003), to provide information on existing best management practices that facilities have likely adopted.

The Guide was developed by EPA and state and tribal representatives, as well as a focus group of industry and public interest stakeholders chartered under the Federal Advisory Committee Act, and reflects a consensus view of best practices for industrial waste management. It also contains recommendations based on more recent scientific developments, and state-of-the art disposal practices for solid wastes.

In addition, EPA considered that many of the technical requirements that EPA developed to specifically address the risks from the disposal of CCRs as part of the subtitle C alternative, would be equally justified under a RCRA subtitle D regime. Thus, for example, EPA is proposing the same MSHA-based standards for surface impoundments that are discussed as part of the subtitle C alternative. The factual record—*i.e.,* the risk analysis and the damage cases—supporting such requirements is the same, irrespective of the statutory authority under which the Agency is operating. Although the statutory standards under subsections C and D differ, EPA has historically interpreted both statutory provisions to establish a comparable level of protection, corresponding to an acceptable risk level ranging between $1 \times 10–4$ to $1 \times 10–6$. In addition, EPA does not interpret section 4004 to preclude the Agency from establishing more stringent requirements where EPA deems such more stringent requirements appropriate. Thus, several of the provisions EPA is proposing under RCRA subtitle D either correspond to the provisions EPA is proposing to establish for RCRA subtitle C, or are modeled after the existing subtitle C requirements. These provisions include the following regulatory provisions specific to CCRs that EPA is proposing to establish: Scope, and applicability (*i.e.,* who will be subject to the rule criteria/requirements), the Design Criteria and Operating Criteria (including provisions for surface impoundment integrity), and several of the provisions specifying appropriate pollution control technologies. Additional support for EPA's decision to specify appropriate monitoring, corrective action, closure, and post-closure care requirements (since the specific requirements correlate closely with the existing 40 CFR 258 requirements) is found in the risk analysis and damage case information. Finally, many of the definitions are the same in each section.

However, both the RCRA subtitle C proposals and the existing 40 CFR part 258 requirements were developed to be implemented in the context of a permitting program, where an overseeing authority evaluates the requirements, and can adjust them, as appropriate to account for site specific conditions. Because there is no corresponding guaranteed permit mechanism under the RCRA subtitle D regulations proposed today, EPA also considered the 40 CFR part 265 interim status requirements for hazardous waste facilities, which were designed to operate in the absence of a permit. The interim status requirements were particularly relevant in developing the proposed requirements for surface impoundments, since such units are not regulated under 40 CFR part 258. Beyond their self-implementing design, these requirements provided a useful model because, based on decades of experience in implementing these requirements, EPA has assurance that they provide national requirements that have proven to be protective for a variety of wastes, under a wide variety

of site conditions. Past experience also demonstrates that facilities can feasibly implement these requirements.

Taking all of these considerations into account, EPA has generally designed the proposed RCRA subtitle D criteria to create self-implementing requirements. These self-implementing requirements typically consist of a technical design standard (*e.g.,* the composite liner requirement for new CCR landfills and surface impoundments). In addition, for many of these requirements, the Agency also has established performance criteria that the owner or operator can meet, in place of the technical design standard, which provides the facility with flexibility in complying with the minimum national criteria. EPA generally has chosen to propose an alternate performance standard for a number of reasons. In several cases, the alternative standard is intended to address the circumstances where the appropriate requirement is highly dependent on site-specific conditions (such as the spacing and location of ground-water wells); consequently, uniform, national standards that assure the requisite level of protection are extremely difficult to establish. EPA could establish a minimum national requirement, but to do so, EPA would need to establish the most restrictive criteria that would ensure protection of the most vulnerable site conditions. Because this would result in overregulation of less vulnerable sites, EPA questions whether such a restrictive approach would be consistent with the RCRA section 4004 standard of ensuring "no *reasonable* probability of adverse effects." (emphasis added). The existing 40 CFR part 258 requirements provide the flexibility to address this issue by establishing alternate performance standards and relying on the oversight resulting from state permitting processes, and supported by EPA approval of state plans. Indeed, EPA made clear in the final MSWLF rule that this was the reason that several of the individual performance standards in the existing 40 CFR part 258 requirements are available only in states with EPA approved programs. *See, e.g.,* 56 FR 51096 (authorizing alternative cover designs). However, EPA cannot rely on these oversight mechanisms to implement the RCRA 4004 subtitle D requirements. Under these provisions of RCRA, EPA lacks the authority to require state permits, approve state programs, and to enforce the criteria. Moreover as discussed in Section IV, the level of state oversight varies appreciably among states. Consequently, for these provisions EPA is also proposing to require the owner or operator of the facility to obtain certifications by independent registered professional engineers to provide verification that these provisions are properly applied. EPA has also proposed to require certifications by independent professional engineers more broadly as a mechanism to facilitate citizen oversight and enforcement. As discussed in greater detail below, EPA is proposing to require minimum qualifications for the professionals who are relied upon to make such certifications. In general, EPA expects that professionals in the field will have adequate incentive to provide an honest certification, given that the regulations require that the engineer not be an employee of the owner or operator, and that they operate under penalty of losing their license.

EPA believes that these provisions allow facilities the flexibility to account for site conditions, by allowing them to deviate from the specific technical criteria, provided the alternative meets a specified performance standard, yet also provide some degree of third-party verification of facility practices. The availability of meaningful independent verification is critical to EPA's ability to conclude that these performance standards will meet the RCRA section 4004 protectiveness standard. EPA recognizes that relying upon third party certifications is not the same as relying upon the state regulatory authority, and will likely not provide the same level of "independence." For example, although not an employee, the engineer will still have been hired by the utility. EPA therefore broadly solicits comment on whether this approach provides the right balance between establishing sufficient guarantee that the regulations will be protective, and offering facilities sufficient flexibility to be able to feasibly implement requirements that will be appropriate to the site conditions. In this regard, EPA would also be interested in receiving suggestions for other mechanisms to provide facility flexibility and/or verification.

There is a broad range of the extent to which states already have some of these requirements in place under their current RCRA subtitle D waste management programs established under state law, as explained previously in this preamble. EPA and certain commenters, however, have identified significant gaps in state programs and current practices. For example, EPA does not believe that many, if any, states currently have provisions that would likely cause the closure of existing surface impoundments, such as the provisions in today's proposed rule that surface impoundments must either retrofit to meet all requirements, such as installing a composite liner, or stop receiving CCRs within a maximum of five years of the effective date of the regulation. The RCRA subtitle D proposal outlined here is intended to fill such gaps and ensure national minimum standards. EPA intends to provide a complete set of requirements, designed to ensure there will be no reasonable probability of adverse effects on health or the environment caused by CCR landfills or surface impoundments. EPA's co-proposed RCRA subtitle D minimum criteria are discussed below.

2. Notifications

In response to EPA's lack of authority to require a state permit program or to oversee state programs, EPA has sought to enhance the protectiveness of the proposed RCRA subtitle D standards by providing for state and public notifications of the third party certifications, as well as other information that documents the decisions made or actions taken to comply with the performance criteria. As discussed in the section-by-section analysis below, documentation of how the various standards are met must be placed in the operating record and the state notified.

The owner or operator must also maintain a web site available to the public that contains the documentation that the standard is met. EPA is proposing that owners and operators provide notification to the public by posting notices and relevant information on an internet site with a link clearly identified as being a link to notifications, reports, and demonstrations required under the regulations. EPA believes the internet is currently the most convenient and widely accessible means for gathering information and disseminating it to the public. However, the Agency solicits comments regarding the methods for providing notifications to the public and the states. EPA also solicits comments on whether there could be homeland security implications with the requirement to post information on an internet site and whether posting certain information on the internet may duplicate information that is already available to the public through the state.

The co-proposed subtitle D regulation accordingly includes a number of public notice provisions. In particular, to ensure that persons residing near CCR surface impoundments are protected from potential catastrophic releases, we are proposing that when a potentially hazardous condition develops regarding

the integrity of a surface impoundment, that the owner or operator immediately notify potentially affected persons and the state. The Agency is also proposing to require that owners or operators notify the state, and place the report and other supporting materials in the operating record and on the company's internet site of various demonstrations, documentation, and certifications. Accordingly, notice must be provided: (1) Of demonstrations that CCR landfills or surface impoundments will not adversely affect human health or the environment; (2) of demonstrations of alternative fugitive dust control measures; (3) annually throughout the active life and post-closure care period that the landfill or surface impoundment is in compliance with the groundwater monitoring and corrective action provisions; (4) when documentation related to the design, installation, development, and decommission of any monitoring wells, piezometers and other measurement, sampling, and analytical devices has been placed in the operating record; (5) when certification of the groundwater monitoring system by an independent registered professional engineer or hydrologist has been placed in the operating record; (6) when groundwater monitoring sampling and analysis program documentation has been placed in the operating record; (7) when the use of an alternative statistical method is to be used in evaluating groundwater monitoring data and a justification for the alternative statistical method has been placed in the operating record; (8) when the owner or operator finds that there is a statistically significant increase over background for one or more of the constituents listed in Appendix III of the proposed rule, at any groundwater monitoring well; (9) when a notice of the results of assessment monitoring that may be required under the groundwater monitoring program is placed in the operating record; (10) when a notice is placed in the operating record that constituent levels that triggered assessment monitoring have returned to or below background levels; (11) when a notice of the intent to close the unit has been placed in the operating record; and (12) when a certification, signed by an independent registered professional engineer verifying that post-closure care has been completed in accordance with the post-closure plan, has been placed in the operating record. Please consult the proposed subtitle D regulation provided with this notice for all the proposed notification and documentation requirements.

As explained earlier, the RCRA subtitle D approach relies on state and citizen enforcement. EPA believes that it cannot conclude that the RCRA subtitle D regulations will ensure there is no reasonable probability of adverse effects on health or the environment, unless there is a mechanism for states and citizens to monitor the situation, such as when groundwater monitoring shows exceedances, so that they can determine when intervention is appropriate. EPA also believes that notifications, such as those described above, will minimize the danger of owners or operators abusing the self-implementing system through increased transparency and by facilitating the citizen suit enforcement mechanism.

EPA is proposing that owners and operators provide notification to the public by posting notices and relevant information on an internet site with a link clearly identified as being a link to notifications, reports, and demonstrations required under the regulations. EPA believes the internet is currently the most convenient and widely accessible means for gathering information. However, the Agency solicits comments regarding the methods for providing notifications to the public and the states.

B. Section-by-Section Discussion of RCRA Subtitle D Criteria

1. Proposed Modifications to Part 257, Subpart A

EPA is proposing to modify the existing open dumping criteria found in 40 CFR 257.1, *Scope and Purpose,* to recognize the creation of a new subpart D, which consolidates all of the criteria adopted for determining which CCR Landfills and CCR Surface impoundments pose a reasonable probability of adverse effects on health or the environment under sections 1008(a)(3) and 4004(a) of the Act. Facilities and practices failing to satisfy these consolidated subpart D criteria violate RCRA's prohibition on open dumping. The proposed regulation also excludes CCR landfills and surface impoundments subject to proposed subpart D from subpart A, except as otherwise provided in subpart D.

In general, these provisions are intended to integrate the new requirements with the existing open dumping criteria, and have only been modified to clarify that the proposed RCRA subtitle D regulations define which CCR landfills and surface impoundments violate the federal standards, and therefore may be enforced by citizen suit under RCRA 4005(a) and 7002. EPA has also proposed language to make clear that those CCR landfills and surface impoundments that are subject to the new proposed Subpart D would not also be subject to Subpart A, with the exception of three of the existing Subpart A criteria (257.3–1, *Floodplains,* 257.3–2 *Endangered Species,* 257.3–3 *Surface water*) that would continue to apply to these facilities. The applicability of these three provisions to CCR disposal facilities is discussed later in this preamble.

Finally, EPA also notes that its intent in excluding CCR landfills and surface impoundments from 40 CFR 257 Subpart A in this manner is to consolidate the requirements applicable to those particular facilities in one set of RCRA subtitle D regulations. EPA does not intend to modify the coverage of 40 CFR 257 subpart A as to other disposal facilities and practices for CCRs, such as beneficial uses of CCRs when they are applied to the land used for food-chain crops. It is EPA's intent that such activities would continue to be subject to the existing criteria under Subpart A.

2. General Provisions

The proposed general provisions address the applicability of the new proposed RCRA Subpart D requirements, the continuing applicability of certain of the existing open dumping criteria, provide for an effective date of 180 days after promulgation, and define key terms for the proposed criteria.

Applicability. The applicability provisions identify those solid waste disposal facilities subject to the new proposed RCRA Subpart D (*i.e.,* CCR landfills and CCR surface impoundments as defined under proposed 257.40(b)). The applicability section also identifies three of the existing subpart A criteria that would continue to apply to these facilities: 257.3–1, *Floodplains,* 257.3–2 *Endangered Species,* 257.3–3 *Surface water.* The applicability of these provisions to CCR disposal facilities is discussed later in this preamble.

The applicability section also specifies an effective date of 180 days after publication of the final rule. EPA believes that, with the specific exceptions discussed below, this time frame strikes a reasonable balance between the time that owners and operators of CCR units would need in order to come into compliance with the rule's requirements, and the need to implement the proposed requirements in a timeframe that will maximize protection of health and the environment. We note that 180 days is

the timeframe for persons to come into compliance with most of the requirements under RCRA subtitle C, and believe that if persons can meet the hazardous waste provisions within this time period under RCRA subtitle C, that it is reasonable to conclude that persons should be able to meet those same or similar requirements under RCRA subtitle D. EPA also notes that pending finalization of any regulations, facilities continue to be subject to the existing part 257 open dumping criteria as they may apply.

3. Definitions

This section of the proposed regulation discusses the definitions of some of the key terms used in the proposed RCRA subtitle D rule that are necessary for the proper interpretation of the proposed criteria. Because EPA is creating a separate section of the regulations specific to CCR units, EPA is also consolidating the existing definitions in this section. However, by simply incorporating these unmodified definitions into this new section of the regulations, EPA is not proposing to reopen, or soliciting comments on these requirements. Nor, for definitions where the only modification relates to an adjustment specific to CCRs, is EPA proposing to revise or reopen the existing part 257 or part 258 definitions as they apply to other categories of disposal facilities, as those will remain unaltered. Accordingly, EPA will not respond to any comments on these definitions.

Aquifer. EPA has defined aquifer for this proposal as a geologic formation, group of formations, or portion of a formation capable of yielding significant quantities of ground water to wells or springs. This is the same definition currently used in EPA's hazardous waste program and MSWLF criteria in 40 CFR 258.2 and differs from the original criteria definition (40 CFR 257.3–4(c)(1)) only in that it substitutes the term "significant" for "usable." The Agency is proposing to adopt the modified definition to make the subtitle C and subtitle D alternatives consistent.

Coal Combustion Residuals (CCRs) means fly ash, bottom ash, boiler slag, and flue gas desulfurization wastes. CCRs are also known as coal combustion wastes (CCWs) and fossil fuel combustion (FFC) wastes.

CCR Landfill. The co-proposed criteria includes a definition of "CCR landfill" to mean an area of land or an excavation, including a lateral expansion, in which CCRs are placed for permanent disposal, and that is not a land application unit, surface impoundment, or injection well. For purposes of this proposed rule, landfills also include piles, sand and gravel pits, quarries, and/or large scale fill operations. EPA modeled this definition after the definition of "Municipal solid waste landfill (MSWLF) unit" contained in the existing criteria for those facilities. Although this is somewhat different than the definition proposed under the subtitle C alternative (which is based on the existing part 260 definition), EPA intends for this proposed definition to capture those landfills and other large-scale disposal practices that are described in EPA's damage cases and risk assessments discussed in sections II, VI, and the RIA.

CCR Surface Impoundment. EPA has proposed to define this term to mean a facility or part of a facility, including a lateral expansion, that is a natural topographic depression, human-made excavation, or diked area formed primarily of earthen materials (although it may be lined with human-made materials), that is designed to hold an accumulation of liquid CCR wastes or CCR wastes containing free liquids and that is not an injection well. EPA has included as examples of surface impoundments settling and aeration pits, ponds, and lagoons. This is the same definition that EPA is proposing as part of the subtitle C alternative, and is generally consistent with the definition of "surface impoundment or impoundment" contained in the existing 257.2 criteria.

EPA further proposes in the definition a description of likely conditions at a CCR surface impoundment, stating that CCR surface impoundments often receive CCRs that have been sluiced (flushed or mixed with water to facilitate movement), or wastes from wet air pollution control devices. EPA intends for this proposed definition to capture those surface impoundments that are described in EPA's damage cases and risk assessments described in sections II, VI, and the RIA.

Existing CCR Landfill/Existing CCR Surface Impoundment. EPA has included a proposed definition of this term to mean a CCR landfill or surface impoundment, which was in operation on, or for which construction commenced prior to the effective date of the final rule. The proposed definition states that a CCR landfill or surface impoundment has commenced construction if: (1) The owner or operator has obtained the Federal, State and local approvals or permits necessary to begin physical construction; and (2) either (i) a continuous on-site, physical construction program has begun; or (ii) the owner or operator has entered into contractual obligations—which cannot be cancelled or modified without substantial loss—for physical construction of the CCR landfill or surface impoundment to be completed within a reasonable time. These definitions are identical to the co-proposed subtitle C definitions, described in section VI. EPA sees no reason to establish separate definitions of these units for purposes of RCRA subtitle D since the question of whether these units are existing should not differ between whether they are regulated under RCRA subtitles C or D.

Factor of Safety (Safety Factor). The proposed definition is the ratio of the forces tending to resist the failure of a structure to the forces tending to cause such failure as determined by accepted engineering practice. This definition is the same as the co-proposed subtitle C definitions, described in section VI. EPA sees no reason to establish a separate definition for this term for purposes of RCRA subtitle D since the question of "Factor of safety" should not differ between units that would be regulated under RCRA subtitles C or D.

Hazard potential classification. This term is proposed to be defined as the possible adverse incremental consequences that result from the release of water or stored contents due to failure of a dam (or impoundment) or misoperation of the dam or appurtenances.

The proposed definition further delineates the classification into four categories:

—*High hazard potential surface impoundment* which is a surface impoundment where failure or misoperation will probably cause loss of human life;

—*Significant hazard potential surface impoundment* which is a surface impoundment where failure or misoperation results in no probable loss of human life, but can cause economic loss, environmental damage, disruption of lifeline facilities, or impact other concerns; and

—*Low hazard potential surface impoundment* means a surface impoundment where failure or mis-operation results in no probable loss of human life and low economic and/or environmental losses. Losses are principally limited to the surface impoundment owner's property.

—*Less than low hazard potential surface impoundment* means a surface impoundment not meeting the definitions for High, Significant, or Low Hazard Potential.

This definition, just like the proposed RCRA subtitle C definition, follows the

Hazard Potential Classification System for Dams, developed by the U.S. Army Corps of Engineers for the National Inventory of Dams. This system is a widely-used definitional scheme for classifying the hazard potential posed by dams, and EPA expects that the regulated community's familiarity with these requirements will make their application to CCR surface impoundments relatively straightforward.

Independent registered professional engineer or hydrologist. This term is defined as a scientist or engineer who is not an employee of the owner or operator of a CCR landfill or surface impoundment who has received a baccalaureate or post-graduate degree in the natural sciences or engineering and has sufficient training and experience in groundwater hydrology and related fields as may be demonstrated by state registration, professional certifications, or completion of accredited university programs that enable that individual to make sound professional judgments regarding groundwater monitoring, contaminant fate and transport, and corrective action.

Because the proposed RCRA subtitle D requirements cannot presuppose the existence of a permit or state regulatory oversight, the criteria in today's proposed rule are self-implementing. However, as discussed earlier, to try to minimize the potential for overregulation, and to provide some degree of flexibility, EPA is proposing to allow facilities to deviate from the criteria upon a demonstration that the alternative meets a specified performance standard. But to provide for a minimum level of verification and to reduce the opportunity for abuse, the Agency believes it is imperative to have an independent party review, and certify the facility's demonstrations. The Agency also believes that those professionals certifying the requirements of today's proposed rule should meet certain minimum qualifications. The Agency is proposing to define a "qualified ground-water scientist" to be a scientist or engineer who has received a baccalaureate or post-graduate degree in the natural sciences or engineering and has sufficient training and experience in ground-water hydrology and related fields as may be demonstrated by State registration, professional certification, or completion of accredited university programs that enable that individual to make sound professional judgments regarding ground-water monitoring, contaminant fate and transport, and corrective action. This requirement is the same as the current requirement at § 258.50(f). The Agency believes that specialized coursework and training should include, at a minimum, physical geology, ground-water hydrology or hydrogeology, and environmental chemistry (*e.g.,* soil chemistry or low temperature geochemistry). Some national organizations, such as the American Institute of Hydrology and the National Water Well Association, currently certify or register ground-water professionals. States may of course establish more stringent requirements for these professionals, including mandatory licensing or certification. As discussed above, EPA seeks comment on the proposed reliance on independent professionals in implementing the proposed flexibility of performance standards.

Lateral expansion means a horizontal expansion of the waste boundaries of an existing CCR landfill, or existing CCR surface impoundment made after the effective date of the final rule. This definition is identical to the co-proposed subtitle C definition, described in section VI. EPA sees no reason to establish a separate definition of this term for purposes of RCRA subtitle D since whether a lateral expansion has occurred at a CCR landfill or surface impoundment should not differ between those units regulated under RCRA subtitles C or D.

New CCR landfill means a CCR landfill from which there is placement of CCRs without the presence of free liquids, which began operation, or for which the construction commenced after the effective date of the rule. This definition is identical to the co-proposed subtitle C definition, described in section VI. EPA sees no reason to establish a separate definition for this term for purposes of RCRA subtitle D since whether a landfill is new should not differ between those landfills that are regulated under RCRA subtitles C or D.

New CCR surface impoundment means a CCR surface impoundment into which CCRs with the presence of free liquids have been placed, which began operation, or for which the construction commenced after the effective date of the rule. EPA sees no reason to establish a separate definition for this term for purposes of RCRA subtitle D since whether a surface impoundment is new should not differ between those surface impoundments that are regulated under RCRA subtitles C or D.

Recognized and generally accepted good engineering practices means engineering maintenance or operation activities based on established codes, standards, published technical reports, recommended practice, or similar document. Such practices detail generally approved ways to perform specific engineering, inspection, or mechanical integrity activities. In several provisions, EPA requires that the facility operate in accordance with "recognized and generally accepted good engineering practices," or requires an independent engineer to certify that a design or operating parameter meets this standard. The definition references but does not attempt to codify any particular set of engineering practices, but to allow the professional engineer latitude to adopt improved practices that reflect the state-of-the art practices, as they develop over time. This definition is the same as the definition EPA is proposing under the subtitle C alternative.

4. Location Restrictions

To provide for no reasonable probability of adverse effects on health or the environment from the disposal of CCRs at CCR landfills and surface impoundments, EPA believes that any RCRA subtitle D regulation would need to ensure that CCR disposal units were appropriately sited. The proposed location restrictions include requirements relating to placement of the CCRs above the water table, wetlands, fault areas, seismic impact zones, and unstable areas. In addition, as previously noted, the location standards in subpart A of 40 CFR part 257 for floodplains, endangered species, and surface waters would also continue to apply. Finally, the proposed regulations also address the closure of existing CCR landfills and surface impoundments.

The location standards in this proposal are primarily based on the location standards developed for municipal solid waste landfill units, and represent provisions to ensure that the structure of the disposal unit is not adversely impacted by conditions at the site, or that the location of a disposal unit at the site would not increase risks to human health or the environment. The criteria for municipal solid waste landfills provide restrictions on siting units in wetlands, fault areas, seismic impact zones, and unstable areas.[151]

[151] The proposed definition of seismic impact zone was modified from the part 258 definition as explained in the "Discussion of Individual Location Requirements" section below. The part 258 criteria also include location restrictions relating to airport safety and floodplains, in 258.10 and 258.11, respectively. EPA has not proposed an analogue to 258.10 because the hazard addressed by that criterion, bird strikes to aircraft, is inapplicable in the context of CCR disposal units, which do not tend to attract birds to them. As discussed in the

Continued

Each of those factors is generally recognized as having the potential to impact the structure of a disposal unit negatively or increase the risks to human health and the environment. As discussed below in more detail, each of these provisions adopted for today's RCRA subtitle D co-proposal relies in large measure, on the record EPA developed to support the 40 CFR part 258 municipal solid waste landfill criteria. EPA's Guide for Industrial Waste Management (EPA530–R–03–001, February 2003) also identifies these location restrictions as appropriate for industrial waste management. These proposed requirements are all discussed in turn below, after a general explanation of the Agency's proposed treatment of new CCR disposal units compared to existing CCR disposal units.

a. Differences in Location Restrictions for Existing and New CCR Landfills and Surface Impoundments, and Lateral Expansions. EPA is proposing different sets of location restrictions under the Subtitle D approach, depending on whether a unit is a CCR landfill or surface impoundment, and whether it is an existing or new unit. Lateral expansions fall within the definitions of new units, and are treated accordingly.

While new landfills would be required to comply with all of the location restrictions, EPA is proposing to subject existing landfills to only two of the location restrictions—floodplains, and unstable areas—in today's rule. Existing landfills are already subject to the floodplains location restriction because it is contained in the existing 40 CFR part 257, subpart A criteria, which have been in effect since 1979. Because owners and operators of existing landfills already should be in compliance with this criterion, applying this location restriction will have no impact to the existing disposal capacity, while continuing to provide protection of human health and the environment.

The Agency decided to apply today's final unstable area location restriction to existing CCR landfills, because the Agency believes that the impacts to human health and the environment that would result from the rapid and catastrophic destruction of these units outweighs any disposal capacity concerns resulting from the closure of existing CCR disposal units.

On the other hand EPA is not proposing to impose requirements on existing CCR landfills in wetlands, fault areas, or seismic impact areas. We base this decision on the possibility that a significant number of CCR landfills may be located in areas subject to this requirement. The Agency believes that such landfills pose less risks and are structurally less vulnerable than surface impoundments, and disposal capacity shortfalls, which could result if existing CCR landfills in these locations were required to close, raise greater environmental and public health concerns than the potential risks caused by existing units in these locations. For example, if existing CCR landfills located in wetlands were required to close, there would be a significant decrease in disposal capacity, particularly given the Agency's expectation that many existing surface impoundments will choose to close, in response to this proposed rule. In addition, wetlands are more prevalent in some parts of the country (*e.g.,* Florida and Louisiana). In these States, the closure of all existing CCR landfills located in wetlands could potentially significantly disrupt statewide solid waste management. Therefore, the Agency believes that it may be impracticable to require the closure of existing CCR landfills located in wetlands. However, EPA seeks comment and additional information regarding the number of existing CCR landfills that are located in such areas.

Concern about impacts on solid waste disposal capacity as well as the lower level of risks and the structural vulnerability of landfills, as compared to surface impoundments, were also the primary reasons the Agency is not proposing to subject existing CCR landfills to today's proposed fault area location restrictions. The closure of a significant number of existing CCR landfills located in fault areas could result in a serious reduction of CCR landfill capacity in certain regions of the U.S. where movement along Holocene faults is common, such as along the Gulf Coast and in much of California and the Pacific Northwest. The Agency, however, does not have specific data showing the number of units and the distance between these disposal units and the active faults, and therefore, is unable to precisely estimate the number of these existing CCR landfills that would not meet today's fault area restrictions. EPA therefore solicits comment and additional data and information regarding the extent to which existing CCR landfills are currently located in such locations. However, given the potential for impacts on solid waste capacity and the lower levels of risk associated with landfills compared to surface impoundments, EPA has concluded that it may not be appropriate to subject existing CCR landfills to the proposed fault area requirements.

Similarly, the Agency is not proposing to impose the seismic impact zone restrictions on existing CCR landfills located in these areas. As with the other location restrictions, the Agency anticipates that a significant number of existing CCR disposal units are located in these areas. EPA is concerned that such facilities would be unable to meet the requirements, because retrofitting would be prohibitively expensive and technically very difficult in most cases, and would therefore be forced to close.

EPA generally seeks comment and additional information regarding the extent to which CCR landfill capacity would be affected by applying these location restrictions to existing CCR landfills. Information on the prevalence of existing CCR landfills in such areas would be of particular interest to the Agency. EPA also notes that the proposed location requirements do not reflect a complete prohibition on siting facilities in such areas, but provide a performance standard that facilities must meet in order to site a unit in such a location. EPA therefore solicits comment on the extent to which facilities could comply with these performance standards, and the necessary costs that would be incurred to retrofit the unit to meet these standards.

As discussed earlier in this preamble, this proposed approach is generally consistent with the proposed approach to existing landfills under subtitle C of RCRA, and with Congressional distinctions between the risks presented by landfills and surface impoundments. Existing landfills that are brought into the hazardous waste system because they are receiving newly listed hazardous wastes are not generally required to be retrofitted with a new minimum-technology liner/leachate collection and removal system (or to close), and they would not be subject to such requirements under today's proposal. EPA sees no reason or special argument to adopt more stringent requirements under the co-proposed subtitle D criteria for CCR landfills, particularly given the volume of the material and the disruption that could be involved if these design requirements were applied to existing landfills.

By contrast, and consistent with its approach to existing surface impoundments under subtitle C, the proposed regulations would apply all of the location restrictions to existing surface impoundments. This means that facilities would need to either

main text, EPA is proposing to maintain the existing criterion in 257, subpart A for floodplains.

demonstrate that the surface impoundment meets the performance standard that serves as the alternative to the prohibition, retrofit the unit so that it can meet the performance standard, or close. EPA is making this distinction because, as discussed in sections IV–VI, the record indicates that the risks associated with CCR surface impoundments are substantially higher than the risks posed by CCR landfills. The impacts to human health and the environment that would result from the rapid and catastrophic destruction of these units could result in injuries to human health and the environment, that are far more significant, as illustrated by the impacts of the recent TVA spill in Tennessee. The risks to human health and the environment of such a catastrophic collapse far outweigh the costs of requiring surface impoundments to retrofit or close. Moreover, there are significant economic costs associated with the failure of a surface impoundment; as noted earlier, the direct cost to clean up the TVA spill is currently estimated to exceed one billion dollars. Surface impoundments also are more vulnerable to structural problems if located in unstable areas, fault areas and seismic impact areas. Finally, as already noted, the distinction EPA is making between existing landfills and existing surface impoundments is also consistent with Congressional direction; as discussed in section VI, Congress specifically required existing surface impoundments receiving hazardous wastes to retrofit to meet the new statutory requirements or to close, in direct contrast to their treatment of existing landfills.

Although many surface impoundments may close as a result of these requirements, EPA believes that it is proposing to take a number of actions to alleviate concerns that this will present significant difficulties with regard to disposal capacity in the short-term: *e.g.,* "grandfathering" in existing CCR landfills, allowing CCR landfills to vertically expand without retrofitting, and delayed implementation dates. At the same time, as discussed in greater detail in section VI, with regard to the subtitle C co-proposal, EPA is soliciting comment on the appropriate amount of time necessary to meet these time frames as well as measures that could help to address the potential for inadequate disposal capacity. EPA notes, however, that unlike under the subtitle C co-proposal, EPA is not proposing to require facilities to cease wet handling. Thus EPA expects that both the impacts and the time frames needed for facilities to come into compliance would be lower.

While the proposed requirements relating to the placement above the water table, wetlands, fault areas, and seismic impact zones would not apply to existing CCR disposal units, all of these restrictions apply to lateral expansions of existing CCR disposal units, as well as new CCR disposal units. Therefore, under the proposal, owners and operators of existing CCR landfills could vertically expand their existing facilities in these locations, but must comply with the provisions governing new units if they wish to laterally expand. EPA expects that allowing such vertical expansion will allow for increased capacity, which will be particularly important, if, as EPA expects, many surface impoundments would close, should this regulation be adopted. At the same time, EPA believes that the risks to human health or the environment will be mitigated because facilities will be required to otherwise comply with the more stringent environmental restrictions, such as the corrective action and closure provisions proposed below.

b. Discussion of Individual Location Requirements

Placement above the water table. The co-proposed subtitle D regulations would prohibit new CCR landfills and all surface impoundments from being located within two feet of the upper limit of the natural water table. EPA is proposing to define the natural water table as the natural level at which water stands in a shallow well open along its length and penetrating the surficial deposits just deeply enough to encounter standing water at the bottom. This is the level of water that exists, when uninfluenced by groundwater pumping or other engineered activities.

Floodplains. CCR landfills and surface impoundments are currently subject to the open dumping criteria contained in 40 CFR 257, Subpart A. These minimum criteria include restrictions on floodplain impacts under 257.3–1. As facilities should already be complying with this requirement, EPA is not proposing to modify it as part of today's rule. Accordingly, EPA is not reopening this requirement.

Wetlands. The regulations require that the facility prepare and make available a written demonstration that such engineering measures have been incorporated into the unit's design to mitigate any potential adverse impact, and require certification by an independent registered professional engineer either that the new CCR disposal unit is not in a prohibited area, as defined by the regulation, or that the demonstration meets the regulatory standards.

Today's proposed wetland provisions would apply only to new CCR landfills, including lateral expansions of existing CCR disposal units, and all surface impoundments. New CCR landfills, which include lateral expansions, as well as all surface impoundments, are barred from wetlands unless the owner or operator of the disposal unit can make the following demonstrations certified by an independent registered professional engineer or hydrologist. First, the owner or operator must rebut the presumption that a practicable alternative to the proposed CCR disposal unit or lateral expansion is available that does not involve wetlands. Second, the owner or operator must show that the construction or operation of the unit will not cause or contribute to violations of any applicable State water quality standard, violate any applicable toxic effluent standard or prohibition, jeopardize the continued existence of endangered or threatened species or critical habitats, or violate any requirement for the protection of a marine sanctuary. Third, the owner or operator must demonstrate that the CCR disposal unit or lateral expansion will not cause or contribute to significant degradation of wetlands. To this end, the owner or operator must ensure the integrity of the CCR disposal unit, and its ability to protect ecological resources by addressing: erosion, stability, and migration potential of native wetland soils, muds and deposits used to support the unit; erosion, stability, and migration potential of dredged and fill materials used to support the unit; the volume and chemical nature of the CCRs; impacts on fish, wildlife, and other aquatic resources and their habitat from release of CCRs; the potential effects of catastrophic release of CCRs to the wetland and the resulting impacts on the environment; and any additional factors, as necessary, to demonstrate that ecological resources in the wetland are sufficiently protected. Fourth, the owner or operator must demonstrate that steps have been taken to attempt to achieve no net loss of wetlands by first avoiding impacts to wetlands to the maximum extent practicable, then minimizing unavoidable impacts to the maximum extent practicable, and finally offsetting remaining unavoidable wetland impacts through all appropriate and practicable compensatory mitigation actions. The owner or operator must place the demonstrations in the operating record and the

company's Internet site, and notify the state that the demonstrations have been placed in the operating record.

For facilities that cannot make such a demonstration, this proposed provision effectively bans the siting of new CCR landfills or surface impoundments in wetlands, and would require existing surface impoundments to close.

EPA notes that this section of the proposal is consistent with regulatory provisions currently governing the CWA section 404 program, including the definition of wetlands contained in proposed 257.61. *See* 40 CFR 232.2(r). EPA believes that wetlands are very important, fragile ecosystems that must be protected, and has identified wetlands protection as a top priority. Nevertheless, EPA has proposed to continue to allow existing CCR landfills to be sited in wetlands to minimize the disruption to existing CCR disposal facilities, as it is EPA's understanding that many existing CCR landfills are located near surface water bodies, in areas that also may qualify as wetlands under the proposed criteria. Likewise, EPA is concerned that an outright ban of new CCR landfills in wetlands would severely restrict the available sites or expansion possibilities, given that EPA is proposing to impose other conditions on surface impoundments that may cause many to ultimately close. As noted in section VI, concerns have been raised regarding the potential for disposal capacity shortfalls, which could lead to other health and environmental impacts, such as the transportation of large volumes of CCRs over long distances to other sites. Accordingly to provide additional flexibility in the proposed RCRA Subtitle D rules, and to address concerns regarding the potential for disposal capacity shortfalls, EPA is not proposing an outright ban on siting of existing CCR disposal units in wetlands.

However, EPA continues to believe that siting new CCR disposal units in wetlands should only be done under very limited conditions. The Agency is therefore proposing a comprehensive set of demonstration requirements. In addition, the Agency believes that when such facilities are sited in a wetland, that the owner or operator should offset any impacts through appropriate and practicable compensatory mitigation actions (*e.g.,* restoration of existing degraded wetlands or creation of man-made wetlands). This approach is consistent with the Agency's goal of achieving no overall net loss of the nation's remaining wetland base, as defined by acreage and function. Specifically, § 257.61(a)(4) requires owners or operators of new CCR landfills and surface impoundments to demonstrate that steps have been taken to achieve no net loss of wetlands (as defined by acreage and function) by first avoiding impacts to wetlands and then minimizing such impacts to the maximum extent feasible, and finally, offsetting any remaining wetland impacts through all appropriate and feasible compensatory mitigation actions (*e.g.,* restoration of existing degraded wetlands or creation of man-made wetlands).

The Agency has also included other requirements to ensure that the demonstrations required under the proposed rule are comprehensive and ensure no reasonable probability of adverse effects to human health and the environment. First, EPA has included language in § 257.61(a)(2) clarifying that the owner or operator must demonstrate that both the construction and operation of the unit will not result in violations of the standards specified in § 257.61(a)(2)(i)–(iv). Second, in § 257.61(a)(3) EPA proposes to identify the factors the owner or operator must address in demonstrating that the unit will not cause or contribute to significant degradation of wetlands. These factors, which were partially derived from the section 404(b)(1) guidelines, address the integrity of the CCR unit and its ability to protect the ecological resources of the wetland. In addition, EPA is proposing requirements for third-party certification and state/public notice, to provide some verification of facility practices, and to generally assist citizens' ability to effectively intervene and enforce the requirements, as necessary.

Fault Areas. The proposed rule would ban the location of new CCR landfills and any surface impoundment within 200 feet (60 meters) of faults that have experienced displacement during the Holocene Epoch. The Holocene is a unit of geologic time, extending from the end of the Pleistocene Epoch to the present and includes the past 11,000 years of the Earth's history. EPA is proposing to define a fault to include a zone or zones of rock fracturing in any geologic material along which there has been an observable amount of displacement of the sides relative to each other. Faulting does not always occur along a single plane of movement (a "fault"), but rather along a zone of movement (a "fault zone"). Therefore, "zone of fracturing," which means a fault zone in the context of the definition, is included as part of the definition of fault, and thus the 200-foot setback distance will apply to the outermost boundary of a fault or fault zone.

The 200-foot setback was first adopted by EPA in the criteria for municipal solid waste landfills (MSWLFs), codified at 40 CFR part 258. In the course of that proceeding, EPA documented that seismologists generally believed that the structural integrity of MSWLFs could not be unconditionally guaranteed when they are built within 200-feet of a fault along which movement is highly likely to occur. Moreover, EPA relied on a study that showed that damage to engineered structures from earthquakes is most severe when the structures were located within 200-feet of the fault along which displacement occurred. Because the engineered structures found at MSWLFs are similar to those found in CCR disposal units, EPA expects that the potential for damage to those structures would be similar in the event of an earthquake near a CCR landfill or surface impoundment. Therefore, EPA is proposing a similar setback requirement for new CCR landfills and all surface impoundments. In general, EPA believes that the 200-foot buffer zone is necessary to protect engineered structures from seismic damages. EPA also expects that the 200-foot buffer is appropriate for CCR surface impoundments, but seeks comment and data on whether the buffer zone should be greater for such units.

However, the Agency is also concerned that the 200-foot setback may be overly protective in some geologic formations, but it is unable to provide a clear definition of these geologic formations. Therefore, the Agency is proposing to allow the opportunity for an owner or operator of a new CCR disposal unit to demonstrate that an alternative setback distance of less than 200 feet will prevent damage to the structural integrity of facility and will be protective of human health and the environment. The demonstration must be certified by an independent registered professional engineer and the owner or operator of the CCR disposal unit must notify the state that the demonstration has been placed in the operating record and on the company's internet site. This approach is consistent with other sections of today's RCRA subtitle D co-proposal for alternatives to the specified self-implementing requirement.

Seismic Impact Zones. As noted, the proposed rule would also ban the location of new CCR landfills and any surface impoundments in seismic impact zones, unless owners or operators demonstrate that the unit is designed to resist the maximum horizontal acceleration in lithified earth material for the site. The design features

to be protected include all containment structures (*i.e.,* liners, leachate collection systems, and surface water control systems). The demonstration must be certified by an independent registered professional engineer and the owner or operator must notify the state that the demonstration has been placed in the operating record and on the company's internet site. For purposes of this requirement, EPA is proposing to define seismic impact zones as areas having a 10 percent or greater probability that the maximum expected horizontal acceleration in hard rock, expressed as a percentage of the earth's gravitation pull (g), will exceed 0.10g in 250 years. This is based on the existing part 258.14 definition of seismic impact. The maps for the 250-year intervals are readily available for all of the U.S. in the U.S. Geological Survey Open-File Report 82–1033, entitled "Probabilistic Estimates of Maximum Acceleration and Velocity in Rock in the Contiguous United States."

Another approach would be to adopt criteria of the National Earthquake Hazards Reduction Program (NEHRP) of the U.S. Geological Survey used to develop national seismic hazard maps. The NEHRP uses ground motion probabilities of 2, 5, and 10% in 50 years to provide a relative range of seismic hazard across the country. The larger probabilities indicate the level of ground motion likely to cause problems in the western U.S. The smaller probabilities show how unlikely damaging ground motions are in many places of the eastern U.S. The maps are available at *http://earthquake.usgs.gov/hazards/products/.* A 50 year time period is commonly used because it represents the typical lifespan of a building, and a 2% probability level is generally considered an acceptable hazard level for building codes. For areas along known active faults, deterministic and scenario ground motion maps could be used to describe the expected ground motions and effects of specific hypothetical large earthquakes (*see* http://earthquake.usgs.gov/hazards/products/scenario/). The Agency solicits comments on the proposed definition and whether there are variants like those used to develop the national seismic hazard maps that could lessen the burden on the industry and the geographic areas covered by the proposed definition. For additional information on the National Seismic Hazard Mapping Project, *see http://earthquake.usgs.gov/hazards/about/.*

Unstable Areas. EPA is proposing to require owners or operators of all CCR landfills, surface impoundments and lateral expansions located in unstable areas to demonstrate that the integrity of the structural components of the unit will not be disrupted. EPA's damage cases have provided indirect evidence of the kind of environmental and human health risks that would be associated with failure of the structural components of the surface impoundment from subsidence or other instability of the earth at a CCR disposal unit. Accordingly, EPA believes that, to provide a reasonable probability of preventing releases and consequent damage to health and the environment from CCRs released from landfills or surface impoundments, limits on the siting of such disposal units is appropriate.

The proposed Subtitle D rule provides that "unstable areas" are locations that are susceptible to natural or human-induced events or forces capable of impairing the integrity of some or all of the CCR disposal unit's structural components responsible for preventing releases from such units. Unstable areas are characterized by localized or regional ground subsidence, settling (either slowly, or very rapidly and catastrophically) of overburden, or by slope failure. The owner or operator must consider the following factors when determining whether an area is unstable: (1) On-site or local soil conditions that may result in significant differential settling; (2) on-site or local geologic or geomorphologic features; and (3) on-site or local human-made features or events (on both the surface and subsurface). The structural components include liners, leachate collection systems, final cover systems, run-on and run-off control systems, and any other component used in the construction and operation of the CCR landfill, surface impoundment or lateral expansion that is necessary for protection of human health and the environment.

Unstable areas generally include:

(1) Poor foundation conditions—areas where features exist that may result in inadequate foundation support for the structural components of the CCR landfill, surface impoundment or lateral expansion (this includes weak and unstable soils);

(2) Areas susceptible to mass movement—areas where the downslope movement of soil and rock (either alone or mixed with water) occurs under the influence of gravity; and

(3) Karst terraces—areas that are underlain by soluble bedrock, generally limestone or dolomite, and may contain extensive subterranean drainage systems and relatively large subsurface voids whose presence can lead to the rapid development of sinkholes.

Karst areas are characterized by the presence of certain physiographic features such as sinkholes, sinkhole plains, blind valleys, solution valleys, losing streams, caves, and big springs, although not all these features are always present. EPA's intent in this proposed requirement is to include as an unstable area only those karst terraces in which rapid subsidence and sinkhole development have been a common occurrence in recent geologic time. Many of the karst areas are shown on the U.S. Geological Survey's National Atlas map entitled "Engineering Aspects of Karst," published in 1984.

Specific examples of such natural or human-induced phenomena include: Debris flows resulting from heavy rainfall in a small watershed; the rapid formation of a sinkhole as a result of excessive local or regional ground-water withdrawal; rockfalls along a cliff face caused by vibrations set up by the detonation of explosives, sonic booms, or other mechanisms; or the sudden liquefaction of a soil with the attendant loss of shear strength following an extended period of constant wetting and drying. Various naturally-occurring conditions can make an area unstable and these can be very unpredictable and destructive, especially if amplified by human-induced changes to the environment. Such conditions can include the presence of weak soils, over steepened slopes, large subsurface voids, or simply the presence of large quantities of unconsolidated material near a watercourse.

The Agency recognizes that rapid sinkhole formation that occurs in some karst terraces can pose a serious threat to human health and the environment by damaging the structural integrity of dams, liners, caps, run-on/run-off control systems, and other engineered structures. However, EPA is not proposing an outright ban of CCR landfills and surface impoundments in all karst terraces because of concerns regarding the impacts of such a ban in certain regions of the country. For example, several States (*i.e.,* Kentucky, Tennessee) are comprised mostly of karst terraces and banning all CCR disposal facilities in karst terraces would cause severe statewide disruptions in capacity available for CCR disposal. Moreover, the Agency believes that some karst terraces may provide sufficient structural support for CCR disposal units and has accordingly tried to provide flexibility for siting in these areas. Therefore, EPA is proposing to allow the construction of new CCR units, and the continued operation of

existing CCR landfills and surface impoundments in karst terraces where the owner or operator can demonstrate that engineering measures have been incorporated into the landfill, surface impoundment, or lateral expansion design to ensure that the integrity of the structural components of the landfill or surface impoundment will not be disrupted. The demonstration must be certified by an independent registered professional engineer, and the owner or operator must notify the state that the demonstration has been placed in the operating record and on the company's internet site.

Closure of Existing CCR Landfills and Surface Impoundments. The proposed rule would require owners and operators of existing CCR landfills and surface impoundments that cannot make the demonstrations required under § 257.62(a) after the effective date of the rule, to close the landfill or surface impoundment within five years of the date of publication of the final rule. Closure and post-closure care must be done in accordance with § 257.100 and § 257.101. The proposed rule would also allow for a case-by-case extension for up to two more years if the facility can demonstrate that there is no alternative disposal capacity and there is no immediate threat to health or the environment. This demonstration must be certified by an independent registered professional engineer or hydrologist. The owner or operator must place the demonstration in the operating record and on the company's internet site and notify the state that this action was taken.

Thus, the proposed rule allows a maximum of 7 years from the effective date of the final rule if this alternative is finally promulgated for existing CCR landfills to comply with the unstable area restrictions, and existing CCR surface impoundments to comply with the location restrictions or to close. As discussed under the subtitle C option, EPA believes that five years will, in most cases, be adequate time to complete proper and effective facility closure and to arrange for alternative waste management. However, there may be cases where alternative waste management capacity may not be readily available or where the siting and construction of a new facility may take longer than five years. EPA believes the two-year extension should provide sufficient time to address these potential problems. EPA continues to believe that impacts on human health and the environment need to be carefully considered, and therefore, today's proposed rule requires the owner or operator to demonstrate that there is no available alternative disposal capacity and there is no potential threat to human health and the environment before adopting the two-year extension. These time frames are consistent with those EPA is proposing under its subtitle C co-proposal for surface impoundments. EPA is aware of no reason that the time frames would need to differ under subtitle D, but solicits comment on this issue.

5. Design Requirements

The CCR damage cases and EPA's quantitative groundwater risk assessment clearly show the need for effective liners—namely composite liners—to very significantly reduce the probability of adverse effects. The co-proposed subtitle D design standards would require that new landfills and all surface impoundments that have not completed closure prior to the effective date of the rule, can only continue to operate if composite liners and leachate collection and removal systems have been installed. Units must be retrofitted or closed within five years of the effective date of the final rule, which is the time frame EPA is proposing for surface impoundments to retrofit or close under the subtitle C alternative. EPA is proposing to require the same liner and leachate collection and removal systems as part of the subtitle D criteria that are being proposed under the RCRA subtitle C co-proposal. The technical justification for these requirements is equally applicable to the wastes and the units, irrespective of the statutory authority under which the requirement is proposed.

EPA is also proposing to adopt the same approach to new and existing units under RCRA subtitle D that it is proposing under RCRA subtitle C. EPA would only require new landfills (or new portions of existing landfills) to meet these minimum technology requirements for liners and leachate collection and removal systems. Existing landfills that continue to receive CCRs after the effective date of the final rule, would not be required to be retrofitted with a new minimum-technology liner/leachate collection and removal system (or to close). They can continue to receive CCRs, and continue to operate as compliant landfills, without violating the open dumping prohibition. However, existing landfills would have to meet groundwater monitoring, corrective action, and other requirements (except as noted) of the subtitle D criteria, to assure that any groundwater releases from the unit were identified and promptly remediated. EPA sees no reason or special argument to adopt any different approach under the co-proposed subtitle D regulations for CCR landfills, particularly given the volume of the material and the disruption that would be involved if these design requirements were applied to existing landfills.

By contrast, existing surface impoundments that have not completed closure by the effective date of the final rule would be required to retrofit to install a liner. This is consistent with, but not identical to, the approach proposed under the RCRA subtitle C alternative. Under the subtitle C alternative, EPA is not proposing to require existing surface impoundments to install the proposed liner systems because the impoundments would only continue to operate for a limited period of time. EPA's proposed treatment standards—dewatering the wastes—will effectively phase out wet handling of CCRs. During this interim period (seven years as proposed), EPA believes that it would be infeasible to require surface impoundments to retrofit, and that compliance with the groundwater monitoring and other subtitle C requirements would be sufficiently protective. EPA lacks the authority under RCRA subtitle D to establish a comparable requirement; EPA only has the authority under RCRA section 4004 to establish standards relating to "disposal," not treatment, of solid wastes. Although EPA expects that many surface impoundments will choose to close rather than install a liner, wet-handling of CCRs can continue, even in existing units, and EPA's risk assessment confirms that the long-term operation of such units would not be protective without the installation of the composite liner and leachate collection system described below.

The composite liner would consist of two components: An upper component consisting of a minimum 30-mil flexible membrane liner (FML), and a lower component consisting of at least a two-foot layer of compacted soil with a hydraulic conductivity of no more than 1×10^{-7}cm/sec. The FML component would be required to be installed in direct and uniform contact with the compacted soil component. (In other words, the new landfill or new surface impoundment would be required to have a liner and leachate collection and removal system meeting the same design standard now included in EPA's municipal solid waste landfill criteria.) EPA solicits comment, however, on whether any subtitle D option should allow facilities to use an alternative design for new disposal units, so long as the owner or operator of a unit could obtain certification from an independent

registered professional engineer or hydrologist that the alternative design would ensure that the appropriate concentration values for a set of constituents typical of CCRs will not be exceeded in the uppermost aquifer at the relevant point of compliance—*i.e.,* 150 meters from the unit boundary down gradient from the unit, or the property boundary if the point of compliance (*i.e.,* the monitoring well) is beyond the property boundary. Although the existing part 258 requirements allow for such a demonstration, EPA is not proposing such a requirement in today's rule. EPA's risk assessment shows that only a composite liner would ensure that disposal of CCR will meet the RCRA section 4004 standard on a national level, even though site specific conditions could support the use of alternate liner designs in individual instances. In the absence of a strong state oversight mechanism, such as a permit, EPA is reluctant to allow facilities to modify this key protection. Nevertheless, EPA would be interested in receiving data and information that demonstrates whether under other site conditions, an alternative liner would be equally protective. In this regard, EPA would also be interested in information documenting the extent to which such conditions currently exist at CCR units. If EPA adopts such a performance standard, EPA anticipates adopting a requirement that is as consistent as possible with the existing part 258 requirements, and would require the same documentation and notification procedures as with the other self-implementing provisions in the co-proposed subtitle D option.

—*Stability requirements for surface impoundments.* In our recent assessment of surface impoundments managing CCRs, EPA has identified deficiencies in units currently receiving wet-handled CCRs.[152] The damage cases also demonstrate the need for requirements to address the stability of surface impoundments, to prevent the damages associated with a catastrophic failure, such as occurred at the TVA facility in 2008. EPA is therefore proposing to adopt as part of the subtitle D operating criteria for surface impoundments, the same stability requirements that are proposed as part of the subtitle C alternative. As explained in that section, these are based on the long-standing MSHA requirements, with only minor modifications necessary to tailor the requirements to CCR unit conditions.

For those surface impoundments which continue to operate, (*i.e.,* both new and existing) the proposed regulation would require that an independent registered professional engineer certify that the design of the impoundment is in accordance with recognized and generally accepted good engineering practices for the maximum volume of CCR slurry and wastewater that will be impounded therein, and that together design and management features ensure dam stability. The proposed regulation also requires the facility to conduct weekly inspections to ensure that any potentially hazardous condition or structural weakness will be quickly identified. As with the co-proposed RCRA subtitle C option, the proposed RCRA subtitle D regulation also requires that existing and new CCR surface impoundments be inspected annually by an independent registered professional engineer to assure that the design, operation, and maintenance of the surface impoundment is in accordance with current, prudent engineering practices for the maximum volume of CCR slurry and CCR waste water which can be impounded. EPA has concluded, subject to consideration of public comment, that these requirements are necessary to ensure that major releases do not occur that would cause adverse effects on health or the environment.

6. Operating Requirements

EPA is proposing to establish specific criteria to address the day-to-day operations of the CCR landfill or surface impoundment. The criteria were developed to prevent the health and environmental impacts from CCR landfills and surface impoundments identified in EPA's quantitative risk groundwater risk assessment and the damage cases. Included among these criteria are controls relating to runon and runoff from the surface of the facilities, discharges to surface waters, and pollution caused by windblown dust from landfills, and recordkeeping.

—*Existing criteria for Endangered Species and Surface Water.* CCR landfills and surface impoundments are currently subject to the open dumping criteria contained in 40 CFR 257, Subpart A. These minimum criteria include restrictions on impacts to endangered species under 257.3–2, and impacts to surface water under 257.3–3. As facilities should already be complying with these requirements, EPA is not proposing to modify these existing requirements in today's co-proposal. EPA notes that the surface water criterion is not enforceable by RCRA citizen suit. The extent to which this criterion may be enforced is governed by the remedies available under the CWA, which is the source of the requirement, rather than RCRA. *See, e.g., Arc Ecology* v. *U.S. Maritime Admin.,* No. 02:07–cv–2320 (E.D. Cal. Jan. 21, 2010); Guidelines for the Development and Implementation of State Solid Waste Management Plans and Criteria for Classification of Solid Waste Disposal Facilities and Practices, 46 Fed. Reg. 47048, 47050 (Sept. 23, 1981).

—*Run-on and run-off controls.* The purpose of the run-on standard is to minimize the amount of surface water entering the landfill and surface impoundment facility. Run-on controls prevent (1) Erosion, which may damage the physical structure of the landfill; (2) the surface discharge of wastes in solution or suspension; and (3) the downward percolation of run-on through wastes, creating leachate. The proposed regulation requires run-on control systems to prevent flow onto the active portion of the CCR landfill or surface impoundment during the peak discharge from a 24-hour, 25-year storm. This helps to ensure that run-off does not cause an overflow of the surface impoundment or scouring of material from a landfill or the materials used to build the surface impoundment.

Run-off is one of the major sources of hazardous constituent releases from mismanaged waste disposal facilities, including CCR landfills and surface impoundments. Additionally, run-off control systems from the active portion of CCR disposal units are required to collect and control at least the water volume resulting from a 24-hour, 25-year storm. This protects surface water that would otherwise flow untreated into a body of water. The facility is required to prepare a report, available to the public, documenting how relevant calculations were made, and how the control systems meet the standard. A registered professional engineer must certify that the design of the control systems meet the standard. Also, the owner or operator is required to prepare a report, certified by an independent registered professional engineer, and documenting how relevant calculations were made, and how the control systems meet the standard. The state must be notified that the report was placed in the operating record for the site, and the owner or operator must make it available to the public on the owner's or operator's internet site. Under the existing part 257 requirements, to which CCR units are currently subject, runoff must not cause

[152] For the findings of the assessment, *see: http://www.epa.gov/epawaste/nonhaz/industrial/special/fossil/surveys/index.htm#surveyresults.*

a discharge of pollutants into waters of the United States that is in violation of the National Pollutant Discharge Elimination System (NPDES) under section 402 of the Clean Water Act. (40 CFR 257.3–3). EPA is not proposing to revise the existing requirement, but is merely incorporating it here for ease of the regulated community.

The Agency chose the 24-hour period because it is an average that includes storms of high intensity with short duration and storms of low intensity with long duration. EPA believes that this is a widely used standard, and is also the current standard used for hazardous waste landfills and municipal solid waste landfill units under 40 CFR Part 258. EPA has no information that warrants a more restrictive standard for CCR landfills and surface impoundments than for MSWLFs and hazardous waste landfills.

Fugitive dust requirements. EPA has included under the co-proposed RCRA subtitle D regulation requirements similar to those included under the Subtitle C co-proposal, based upon its risk assessment findings that fugitive dust control at 35 μg/m3 or less is protective of human health or the environment. This is discussed in section VI above. Due to the lack of a permitting oversight mechanism under the RCRA Subtitle D alternative, and to facilitate citizen-suit enforcement of the criteria, EPA has provided for certification by an independent registered professional engineer, notification to the state that the documentation has been placed in the operating record, and provisions making available to the public on the owner's or operator's internet site documentation of the measures taken to comply with the fugitive dust requirements.

Recordkeeping requirements. EPA believes that it is appropriate for interested states and citizens to be able to access all of the information required by the proposed rule in one place. Therefore, the co-proposed Subtitle D alternative requires the owner or operator of a CCR landfill or surface impoundment to record and retain near the facility in an operating record which contains all records, reports, studies or other documentation required to demonstrate compliance with §§ 257.60 through 257.83 (relating to the location restrictions, design criteria, and operating criteria) and 257.90 through 257.101 (relating to ground water monitoring and corrective action, and closure and post-closure care).

The proposed rule would also require owners and operators of CCR surface impoundments that have not been closed in accordance with the closure criteria to place in the operating record a report containing several items of information. The reports would be required beginning every twelfth months after existing CCR surface impoundments would be required to comply with the design requirements in section 257.71 (that is, no later than seven years after the effective date of the final rule) and every twelfth month following the date of the initial plan for the design, construction, and maintenance of new surface impoundments and lateral expansions required under § 257.72(b)) to address:

(1) Changes in the geometry of the impounding structure for the reporting period;

(2) Location and type of installed instruments and the maximum and minimum recorded readings of each instrument for the reporting period;

(3) The minimum, maximum, and present depth and elevation of the impounded water, sediment, or slurry for the reporting period;

(4) Storage capacity of the impounding structure;

(5) The volume of the impounded water, sediment, or slurry at the end of the reporting period;

(6) Any other change which may have affected the stability or operation of the impounding structure that has occurred during the reporting period; and

(7) A certification by an independent registered professional engineer that all construction, operation, and maintenance were in accordance with the plan. The owner or operator would be required to notify the state that the report has been placed in the operating record and on the owner's or operator's internet site.

These reporting requirements are similar to those required under MSHA regulations for coal slurry impoundments (30 CFR 77.216–4). As the Agency has stated previously, MSHA has nearly 40 years of experience writing regulations and inspecting dams associated with coal mining, which is directly relevant to the issues presented by CCRs in this proposal. In our review of the MSHA regulations, we found them to be comprehensive and directly applicable to and appropriate for the dams used in surface impoundments at coal-fired utilities to manage CCRs.

The proposed rule would also allow the owner or operator to submit a certification by an independent registered professional engineer that there have been no changes to the information in items (1)–(6) above to the surface impoundment instead of a full report, although a full report would be required at least every 5 years.

7. Groundwater Monitoring/Corrective Action

EPA's damage cases and risk assessments all indicate the potential for CCR landfills and surface impoundments to leach hazardous constituents into groundwater, impairing drinking water supplies and causing adverse impacts on human health and the environment. Indeed, groundwater contamination is one of the key environmental risks EPA has identified with CCR landfills and surface impoundments. Furthermore, as mentioned previously, the legislative history of RCRA section 4004 specifically evidences concerns over groundwater contamination from open dumps. To this end, groundwater monitoring is a key mechanism for facilities to verify that the existing containment structures, such as liners and leachate collection and removal systems, are functioning as intended. Thus, EPA believes that, in order for a CCR landfill or surface impoundment to show no reasonable probability of adverse effects on health or the environment, a system of routine groundwater monitoring to detect any such contamination from a disposal unit, and corrective action requirements to address identified contamination, is necessary.

Today's co-proposed subtitle D criteria require a system of monitoring wells be installed at new and existing CCR landfills and surface impoundments. The co-proposed criteria also provide procedures for sampling these wells and methods for statistical analysis of the analytical data derived from the well samples to detect the presence of hazardous constituents released from these facilities. The Agency is proposing a groundwater monitoring program consisting of detection monitoring, assessment monitoring, and a corrective action program. This phased approach to groundwater monitoring and corrective action programs provide for a graduated response over time to the problem of groundwater contamination as the evidence of such contamination increases. This allows for proper consideration of the transport characteristics of CCR constituents in ground water, while protecting human health and the environment, and minimizing unnecessary costs.

In EPA's view, the objectives of a groundwater monitoring and corrective action regime and analytical techniques for evaluating the quality of groundwater are similar regardless of the particular wastes in a disposal unit, and regardless of whether the unit is a

landfill or surface impoundment. Therefore, EPA has largely modeled the proposed groundwater monitoring and corrective action requirements for CCR landfills and surface impoundments after those for MSWLFs in the 40 CFR part 258 criteria, and for disposal units that may receive conditionally-exempt small quantity generator (CESQG) hazardous waste under 40 CFR part 257, subpart B. EPA believes that the underlying rationale for those requirements is generally applicable to groundwater monitoring and corrective action for CCR landfills and surface impoundments. Accordingly, EPA does not discuss these requirements at length in today's preamble. Rather, EPA refers the reader to the detailed discussions of these requirements in the preambles to the final and proposed rules for the MSWLF criteria for more information.[153] *See* Solid Waste Disposal Facility Criteria, 56 Fed. Reg. 50978 (Oct. 9, 1991) (final rule); Solid Waste Disposal Facility Criteria, 53 Fed. Reg. 33314 (Aug. 30, 1988) (proposed rule).

However, for a number of the requirements, EPA is proposing to modify or revise these requirements. Below, EPA discusses the particular areas where the Agency is proposing to make modifications, and solicits comment on those specific differences. EPA, more generally, solicits comment on whether relying on the existing groundwater monitoring and corrective action requirements for MSWLFs and CESQG facilities, as modified in today's proposal, are appropriate for CCR landfills and surface impoundments.

Relying on the existing criteria in 40 CFR 258 and 257 Subpart B has several advantages. Specifically, like the co-proposed Subtitle D regulations for CCR disposal, these requirements are structured to be largely self-implementing. In addition, states and citizens should already be familiar with those processes, which have been in place since 1991, and EPA expects that this familiarity with the processes may facilitate the states' creation of regulatory programs for CCR disposal facilities under state law, to the extent they do not already exist, and thus providing oversight (which EPA believes is important in implementing these rules) that is already found through MSWLFs and CESQG landfill permitting programs. Furthermore, familiarity with the overall approach may facilitate the states' and citizens' oversight of CCR disposal activities through the citizen suit mechanism, which is available, regardless of whether a state has adopted a regulatory program under state law for CCR disposal facilities.

At the same time, however, EPA is mindful of the differences in the statutory authorities for establishing criteria for CCR landfills and surface impoundments versus MSWLFs and CESQG facilities, and in particular, the possibility that a state may lack a permit program for CCR disposal units. Accordingly, EPA has sought to tailor these proposed requirements in the CCR disposal context, in particular by including in several of the proposed requirements a certification by an independent registered professional engineer or, in some cases, hydrologist, in lieu of the state approval mechanisms that are used in the 40 CFR part 258/257, Subpart B criteria. Such certifications are found in proposed §§ 257.95(h) (establishment of an alternative groundwater protection standard for constituents for which MCLs have not been established); and 257.97(e) (determination that remediation of a release of an Appendix IV constituent from a CCR landfill or surface impoundment is not necessary). As discussed earlier in this preamble, EPA believes that this provides an important independent validation of the particular route chosen. EPA solicits comment in particular on the appropriateness of relying on such a mechanism under the proposed groundwater monitoring and corrective action criteria.

In other instances, however, EPA has decided not to propose to allow facilities to operate under an alternative standard, such as the existing provisions under 257.21(g) and 258.50(h) (establishing alternative schedules for groundwater monitoring and corrective action); and 258.54(a)(1) and (2), and 257.24(a)(1) and (2), which allow the Director of an approved State to delete monitoring parameters, and establish an alternative list of indicator parameters, under specified circumstances. EPA is proposing not to adopt these alternatives for CCR disposal facilities because groundwater monitoring is the single most critical set of protective measures on which EPA is relying to protect human health and the environment. EPA is not proposing to require existing landfills to retrofit to install a composite liner. Since these units will continue to operate in the absence of a composite liner, groundwater monitoring is the primary means to prevent groundwater contamination. Although EPA is proposing to require existing surface impoundments to retrofit with composite liners, these units are more susceptible to leaking, and thus the need for a rigorous groundwater monitoring program is correspondingly high. Moreover, EPA is concerned that provisions allowing such modification of these requirements are particularly susceptible to abuse, since such provisions would allow substantial cost avoidance. Therefore, in the absence of a state oversight mechanism in place to ensure such modifications are technically appropriate, such a provision may operate at the expense of protectiveness. In addition, given the extremely technical nature of these requirements, EPA is concerned that such provisions would render the requirements appreciably more difficult for citizens to effectively enforce. In some instances, including these alternative standards would not be workable. For example, establishing alternative schedules under the groundwater monitoring and corrective action provisions (as currently provided under 257.21(g) and 258.50(h)) the Agency believes would not be workable in the context of a self-implementing rule, because there is no regulatory entity to judge the reasonableness of the desired alternatives. The Agency thus solicits comments on these omissions from today's proposed rule, and also on whether a more prescriptive approach could or should be developed under subtitle D of RCRA. EPA also solicits comment on whether the requirement for certification by an independent professional engineer would be effective or appropriate in such a case.

Applicability. The co-proposed subtitle D criteria require facilities to install a groundwater monitoring system at existing landfills and surface impoundments within one year of the effective date of the regulation so that any releases from these units will be detected, thus providing an opportunity to detect and, if necessary, take corrective action to address any releases from the facilities. The proposed rule also provides that new CCR landfills and surface impoundments comply with the groundwater monitoring requirements in the rule before CCRs can be placed in the units. EPA expects that the one-year timeframe for existing units is a reasonable time for facilities to install the necessary systems. This is the same time frame provided to

[153] The preambles to the CESQG rules have more limited discussions of these requirements. See Criteria for Classification of Solid Waste Disposal Facilities and Practices; Identification and Listing of Hazardous Waste; Requirements for Authorization of State Hazardous Waste Programs, 61 FR 34252, 34259–61 (July 1, 1996) (final rule); Criteria for Classification of Solid Waste Disposal Facilities and Practices; Identification and Listing of Hazardous Waste; Requirements for Authorization of State Hazardous Waste Programs, 60 FR 30964, 30975–77 (June 12, 1995) (proposed rule).

facilities under the existing part 265 interim status regulations, and past experience demonstrates this implementation schedule would generally be feasible. Although one year for the installation of groundwater monitoring is a shorter time frame than EPA provided to facilities as part of the original part 258 or part 257 subpart A requirements, there are good reasons to establish a shorter time frame here. As discussed in section IV, many of the existing units into which much of the CCR is currently disposed are unlined, and they are aging. Under these circumstances, EPA believes that installation of groundwater monitoring is critical to ensure that releases from these units are detected and addressed appropriately. Moreover, EPA offered a longer implementation period in 1991 based on a factual finding that a shortage of drilling contractors existed; in the 1995 rule establishing groundwater monitoring requirements for CESQG facilities, EPA determined that this shortage had ended. EPA is aware of no information to suggest that a similar shortage exists today, but specifically solicits comment on this issue.

EPA has not included provisions for suspension of ground water monitoring that is currently allowed under 257.21(b) and 258.50(b). This is one of those provisions discussed above, that EPA believes are potentially, particularly susceptible to abuse, and EPA is reluctant to adopt a comparable provision in the absence of an approved state permit program. In addition, since these proposed criteria are designed to be applied even in the absence of state action, EPA has not included provisions for state establishment of a compliance schedule under 257.21(d) and 258.50(d). EPA solicits comment on whether these types of provisions are appropriate for CCR landfills and surface impoundments.

Section 257.90 also requires that the owner or operator of the CCR landfill or surface impoundment must notify the state once each year throughout the active life and post-closure care period that such landfill or surface impoundment is in compliance with the groundwater monitoring and corrective action provisions of this subpart. This notification must also be placed on the owner or operator's internet site. EPA believes that annual notification will facilitate state oversight of the groundwater monitoring and corrective action provisions.

Groundwater monitoring systems. The co-proposed subtitle D criteria require facilities to install, at a minimum, one up gradient and three down gradient wells at all CCR units. EPA is proposing this requirement based on the subtitle C interim status self-implementing requirements.

The design of an appropriate groundwater monitoring system is particularly dependent on site conditions relating to groundwater flow, and the development of a system must have a sufficient number of wells, installed at appropriate locations and depths, to yield groundwater samples from the uppermost aquifer that represents the quality of background groundwater that has not been affected by contaminants from CCR landfills or surface impoundments. EPA's existing requirements under parts 257, Subpart B, 258, and 264 all recognize this, and because they operate in a permitting context, these requirements do not generally establish inflexible minimum requirements. Because the same guarantee of permit oversight is not available under the criteria developed for this proposal, EPA believes that establishing a minimum requirement is necessary. Past experience demonstrates that these monitoring requirements will be protective of a wide variety of conditions and wastes, and that facilities can feasibly implement these requirements. Moreover, in many instances a more detailed groundwater monitoring system may need to be in place, and EPA is therefore requiring a certification by the independent registered professional engineer or hydrologist that the groundwater monitoring system is designed to detect all significant groundwater contamination.

Groundwater sampling and analysis requirements. Owners and operators need to ensure that consistent sampling and analysis procedures are in place to determine whether a statistically significant increase in the level of a hazardous constituent has occurred, indicating the possibility of groundwater contamination. The co-proposed subtitle D criteria would require the same provisions addressing groundwater sampling and analysis procedures with those already in use for CESQG and MSWLF facilities, since generally the same constituents and analysis procedures would be appropriate in both instances. However, EPA is requesting comment on one issue in particular. In the final MSWLF criteria, EPA noted that in order to ensure protection of human health and the environment at MSWLFs, it was important to make sure that the right test methodology from among those listed in this section was selected for the conditions present at a particular MSWLF. At the time, EPA indicated its expectation that as states gained program approval, they would take on the responsibility of approving alternate statistical tests proposed by the facilities. *See* 56 Fed. Reg. 51071. Because states may choose not to create a regulatory oversight mechanism under the co-proposed subtitle D rule for CCR landfills and surface impoundments, however, EPA is requesting comment on whether the lack of such an oversight mechanism will impair selection of appropriate test methodologies, and whether EPA should instead adopt a different approach to ensure the protection of human health and the environment at CCR disposal facilities. For example, one approach might be for EPA to tailor a list of methodologies to particular site conditions. EPA would welcome suggestions from commenters on alternative approaches to this issue.

Detection monitoring program. The parameters to be used as indicators of groundwater contamination are the following: boron, chloride, conductivity, fluoride, pH, sulphate, sulfide, and total dissolved solids (TDS). In selecting the parameters for detection monitoring, EPA selected constituents that are present in CCRs, and would rapidly move through the subsurface and thus provide an early detection as to whether contaminants were migrating from the disposal unit. EPA specifically solicits comment on the appropriateness of this list of parameters.

In this provision of the proposed RCRA subtitle D co-proposed rule, EPA has decided not to include provisions parallel to 258.54(a)(1) and (2), and 257.24(a)(1) and (2) which allow the Director of an approved State to delete monitoring parameters, and establish an alternative list of indicator parameters, under specified circumstances. EPA is not including these provisions because it believes that a set of specified parameters are necessary to ensure adequate protectiveness, since EPA's information on CCRs indicates that their composition would not be expected to vary such that the parameters are inappropriate. Under the proposed rule, monitoring would be required no less frequently than semi-annually. EPA has again decided not to include a provision that would allow an alternative sampling frequency, because of the lack of guaranteed state oversight and potential for this provision to diminish protection of human health and the environment, as mentioned in the introductory discussions above. EPA solicits comments on whether it should allow deletion of monitoring parameters and alternative sampling frequencies, based on compliance with a performance standard that has been

documented by an independent registered professional engineer or hydrologist. Commenters interested in supporting such an option are encouraged to provide data to demonstrate the conditions under which such alternatives would be protective, as well as information to indicate the prevalence of such conditions at CCR facilities.

Assessment monitoring program. When a statistically significant increase over background levels is detected for any of the monitored constituents, the rule would require the facility to begin an assessment monitoring program to detect releases of CCR constituents of concern including aluminum, antimony, arsenic, barium, beryllium, boron, cadmium, chloride, chromium, copper, fluoride, iron, lead, manganese, mercury, molybdenum, pH, selenium, sulphate, sulfide, thallium, and total dissolved solids.

EPA specifically solicits comment on the appropriateness of this list of parameters. For the same reasons as discussed under the proposed requirements for detection monitoring, EPA has chosen not to include in the proposed requirements for assessment monitoring provisions for allowing a subset of wells to be sampled, the deletion of assessment monitoring parameters, or alternative sampling frequencies. EPA again solicits comment on whether these options are appropriate for CCR landfills and surface impoundments.

Assessment of corrective measures. The proposed rule also requires that whenever monitoring results indicate a statistically significant level of any appendix IV constituent exceeding the groundwater protection standard, the owner or operator must initiate an assessment of corrective action remedies. Unlike for the MSWLF and CESQG criteria, the proposed rule provides a discrete time frame for completion of the assessment, at 90 days, while the earlier criteria provided for its completion within a "reasonable period of time." EPA believes that without a state oversight mechanism, a finite time frame is appropriate. EPA selected 90 days as the period over which the assessment must be completed because it expects that this will be a sufficient length of time to complete the required activities. EPA solicits comment on the appropriateness of the 90-day timeframe.

Selection of Remedy. The proposed rule establishes a framework for remedy selection based upon the existing requirements for MSWLFs and CESQG facilities. These provisions have been modified to eliminate consideration of "practicable capabilities" where such considerations have been included in the MSWLF and CESQG criteria. EPA believes that it does not have the discretion to include this consideration under the RCRA subtitle D co-proposal, because this consideration is explicitly required under the terms of RCRA section 4010. That section by its terms applies to facilities that may receive household hazardous wastes and CESQG wastes, and so is inapplicable to today's co-proposed standards for CCR landfills and surface impoundments. *See* 42 U.S.C. 6949a(c)(1). EPA solicits comment on these modifications, specifically, on how this modification may affect the ability of the regulated community to comply with the proposed criteria, and on how this modification may affect the protectiveness of the proposed standards for human health and the environment.

In the provisions discussing factors to be considered in determining whether interim measures are necessary, EPA has modified proposed 257.98(a)(3)(vi), to eliminate consideration of risks of fire or explosion, since EPA does not expect that these risks would be relevant to the disposal of CCRs in CCR landfills and surface impoundments.

Implementation of the corrective action remedy. The co-proposed subtitle D criteria require that the owner or operator comply with several requirements to implement the corrective action program, again modeled after the existing requirements for MSWLFs and CESQG facilities. Similar to proposed section 257.97, these provisions have been made consistent with the underlying statutory authorities for this proposed rule. *See* discussions above.

In these provisions, EPA has decided not to include a provision that is included in the MSWLF criteria in 258.58(e)(2) and 257.28(e)(2), allowing an alternative length of time during which the owner or operator must demonstrate that concentrations of constituents have not exceeded the ground water protection standards, in support of a determination that the remedy is complete. *See* proposed 257.98(e)(2). Instead, the proposed rule would require a set period of three consecutive years. EPA solicits comment on whether to allow for a different period of time. EPA is particularly concerned with whether such a provision would provide protection to human health or the environment because of the lack of a guaranteed state oversight mechanism.

8. Closure and Post-Closure Care

Effective closure and post-closure care requirements, such as requirements to drain the surface impoundment, are essential to ensuring the long-term safety of disposal units. Closure requirements, such as placing the cover system on the disposal unit, ensure that rainfall is diverted from the landfill or surface impoundment, minimizing any leaching that might occur based on the hydraulic head placed on the material in the unit. EPA's Guide for Industrial Waste Management, prepared in consultation with industry experts, a Tribal representative, state officials, and environmental groups, documents the general consensus on the need for effective closure and post-closure requirements.[154] Post-closure care requirements are also particularly important for CCR units because the time to peak concentrations for selenium and arsenic, two of the more problematic constituents contained in CCR wastes, is particularly long, and therefore the peak concentrations in groundwater may not occur during the active life of the unit. Continued groundwater monitoring is therefore necessary during the post-closure care period to ensure the continued integrity of the unit and the safety of human health and the receiving environment. For these provisions, then, EPA has again modeled its proposed requirements for CCR landfills on those already in place for MSWLFs with modifications to reflect the lack of a mandatory permitting mechanism, and other changes that it believes are appropriate to ensure that there is no reasonable probability of adverse effects from the wastes that remain after a unit has closed. For surface impoundments, EPA has modeled its proposed requirements on the part 265 interim status closure requirements for surface impoundments, as well as the MSHA requirements. EPA solicits comment on whether these proposed requirements are appropriate for CCR landfills and surface impoundments.

Requirements specific to closure of CCR landfills and surface impoundments include proposed 257.100(a)–(c). These provisions provide that prior to closure of any CCR unit, the owner or operator must develop a plan describing the closure of the unit, and a schedule for implementation. The plan must describe the steps necessary to close the CCR landfill or surface impoundment at any point during the active life in

[154] Guide for Industrial Waste Management, *available at http://www.epa.gov/epawaste/nonhaz/industrial/guide/index.htm.*

accordance with the requirements in paragraphs (c) and (d) or (e) of this section, as applicable, and based on recognized and generally accepted good engineering practices. EPA is proposing to define recognized and generally accepted good engineering practices in the same manner as it is proposing under the subtitle C alternative. The definition references but does not attempt to codify any particular set of engineering practices, but to allow the professional engineer latitude in adopting improved practices that reflect the state-of-the art practices, as they develop over time. The plan must be certified by an independent registered professional engineer. In addition, the owner or operator must notify the state that a plan has been placed in the operating record and on the owner's or operator's publically accessible Internet site.

These provisions are modeled after the closure plan requirements in 258.60(c). Of note here is that, while EPA rejected a certification requirement for MSWLF closure plans, EPA is proposing to require one here to increase the ability of citizens to effectively enforce the rules. In the MSWLF rule, EPA rejected a certification requirement because "it will be relatively easy to verify that the plan meets the requirements," due to the specific design criteria specified in the rule. However, this was in the context of a state program, where EPA could assure that states would play an active role in overseeing and enforcing the facility's implementation of the requirements.

EPA is also proposing that the closure plan provide, at a minimum, the information necessary to allow citizens and states to determine whether the facility's closure plan is reasonable. This includes an estimate of the largest area of the CCR unit ever requiring a final cover during the active life of the unit, and an estimate of the maximum inventory of CCRs ever on-site during the active life of the unit.

Proposed 257.100(b) of the rule allows closure of a CCR landfill or surface impoundment with CCRs in place or through CCR removal and decontamination of all areas affected by releases from the landfill or surface impoundment. Proposed paragraph (c) provides that CCR removal and decontamination are complete when constituent concentrations throughout the CCR landfill or surface impoundment and any areas affected by releases from the CCR landfill or surface impoundment do not exceed the numeric cleanup levels for those CCR constituents, to the extent that the state has established such clean up levels in which the CCR landfill or surface impoundment is located. These "clean-closure" provisions are modeled after EPA's "Guide for Industrial Waste Management," found at *http://www.epa.gov/epawaste/nonhaz/industrial/guide/chap11s.htm.* As previously noted, the Guide represents a consensus view of best practices for industrial waste management, based on involvement from EPA, and state and tribal representatives, as well as a focus group of industry and public interest stakeholders chartered under the Federal Advisory Committee Act. EPA has included this provision to allow some flexibility in the self-implementing scheme for facilities in their closure options, while providing protection for health and the environment under either option. Although EPA anticipates that facilities will mostly likely not clean close their units, given the expense and difficulty of such an operation, EPA believes that they are generally preferable from the standpoint of land re-use and redevelopment, and so wishes explicitly to allow for such action in the proposed subtitle D rule. EPA is also considering whether to adopt a further incentive for clean closure, under which the owner or operator of the CCR landfill or surface impoundment could remove the deed notation required under proposed 257.100(m), if all CCRs are removed from the facility, and notification is provided to the state. In the absence of state cleanup levels, metals should be removed to either statistically equivalent background levels, or to maximum contaminant levels (MCLs), or health-based numbers. One tool that can be used to help evaluate whether waste removal is appropriate at the site is the risk-based corrective action process (RBCA) using recognized and generally accepted good engineering practices such as the ASTM Ec0–RBCA process. EPA solicits comment on the appropriateness of this provision under a RCRA subtitle D rule, and information on the number of facilities that may take advantage of a clean-closure option.

For closure of surface impoundments with CCRs in place, EPA has developed substantive requirements modeled on a combination of the existing 40 CFR part 265 interim status requirements for surface impoundments, and the long-standing MSHA standards. At closure, the owner or operator of a surface impoundment would be required to either drain the unit, or solidify the remaining wastes. EPA is also proposing to require that the wastes be stabilized to a bearing capacity sufficient to support the final cover. The proposed criteria further require that, in addition to the technical cover design requirements applicable to landfills, any final cover on a surface impoundment would have to meet requirements designed to address the nature of the large volumes of remaining wastes. Specifically, EPA is proposing that the cover be designed to minimize, over the long-term, the migration of liquids through the closed impoundment; promote drainage; and accommodate settling and subsidence so that the cover's integrity is maintained. Finally, closure of the unit is also subject to the general performance standard that the probability of future impoundment of water, sediment, or slurry is precluded. This general performance standard is based on the MSHA regulations, and is designed to ensure the long-term safety of the surface impoundment.

The proposed RCRA subtitle D regulation requires that CCR landfills and surface impoundments have a final cover system designed and constructed to have a permeability less than or equal to the permeability of any bottom liner system or natural subsoils present, or a permeability no greater than 1×10^{-5} cm/sec, whichever is less; it also requires an infiltration layer that contains a minimum of 18 inches of earthen material. The regulation also requires an erosion layer that contains a minimum of 6 inches of earthen material that is capable of sustaining native plant growth as a way to minimize erosion of the final cover. These requirements are generally modeled after the performance standard and technical requirements contained in the existing RCRA subtitle D rules for MSWLFs, in 258.60. EPA is also proposing, however a fourth requirement not found in those criteria modeled after the interim status closure requirements of 265.228(a)(iii)(D) that accounts for the conditions found in surface impoundments. Specifically, EPA is proposing that the final cover be designed to minimize the disruption of the final cover through a design that accommodates settling and subsidence. EPA believes that these requirements strike a reasonable balance between the costs of a protective final cover, and avoiding risks to health and the environment from the remaining wastes at the CCR landfill or surface impoundment. The regulation requires certification by an independent registered professional engineer that these standards were met. The design of the final cover system, including the certification, must be placed in the operating record and on the owner's or

operator's Internet site. Based on the MSHA standards, EPA is also proposing that unit closure must provide for major slope stability to prevent the sloughing of the landfill over the long term.

Alternatively, the rule allows the owner or operator of the CCR landfill or surface impoundment to select an alternative final cover design, provided the alternative cover design is certified by an independent registered professional engineer and notification is provided to the state that the alternative cover design has been placed in the operating record and on the owner's or operator's Internet site. The alternative final cover design must include a infiltration layer that achieves an equivalent reduction in infiltration, and an erosion layer that provides equivalent protection from wind and water erosion, as the infiltration and erosion layers specified in the technical standards in paragraph (d). Under this alternative, EPA expects that evapo-transpiration covers may be an effective alternative, which are not appropriately evaluated based on permeability alone. For example, an independent registered professional engineer might certify an alternative cover design that prevents the same level of infiltration as the system described above (*i.e.,* no greater than 1×10^{-5} cm/sec, etc), based on: (1) hydrologic modeling and lysimetry or instrumentation using a field scale test section, or (2) Hydrologic modeling and comparison of the soil and climatic conditions at the site with the soil and climatic conditions at an analogous site with substantially similar cover design. In this case, the owner or operator of the disposal unit must obtain certification from an independent registered professional engineer that the alternative cover would minimize infiltration at least as effectively as the "design" cover described above. As with the other final covers, the design of the evapo-transpiration cover must be placed on the owner's or operator's Internet site.

EPA has included this alternative cover requirement to increase the flexibility for the facility to account for site-specific conditions. However, EPA is specifically soliciting comment on whether this degree of flexibility is appropriate, given the lack of guaranteed state oversight. In the final MSWLF rule, EPA adopted a comparable provision, but concluded that this alternative would not be available in States without approved programs. *See,* 56 FR 51096. Given that EPA can neither approve state programs, nor rely on the existence of a state permit process, EPA questions whether this kind of requirement is appropriate. Commenters who believe this requirement would be appropriate are encouraged to include examples documenting the need for flexibility in developing cover requirements, as well as data and information to demonstrate that alternative cover designs would be protective. EPA would also welcome suggestions for other methods to allow owners and operators of CCR landfills and surface impoundment facilities to account for site-specific conditions that provide a lower degree of individual facility discretion, such as a list of approved cover designs.

The proposed rule includes the same 30- and 180-day deadlines for beginning and completing closure, respectively, that are contained in existing section 258.60(f) and (g) for MSWLFs. However, EPA has decided not to propose to include a provision under which the owner and operator could extend those deadlines under the MSWLF criteria. EPA believes that extending the closure deadlines in this context is inappropriate because, in the absence of an approved State program, the owner or operator could unilaterally decide to extend the time for closure of the unit, without any basis, or oversight by a regulatory authority.

The proposed closure requirements also include a provision addressing required deed notations. In this regard, EPA is considering whether to include a provision for removing the deed notation once all CCRs are removed from the facility, and notification is provided to the state of this action. In the MSWLF rule, we adopted such a provision, but determined that state oversight of such a provision was essential, given the potential for abuse. As we noted in the final MSWLF rule, "EPA strongly believes that a decision to remove the deed notation must be considered carefully and that in practice very few owners or operators will be able to take advantage of the provision." EPA solicits comment on the propriety of such a provision, and encourages commenters who are interested in supporting such an option, to suggest alternatives to state oversight to provide for facility accountability.

Following closure of the CCR management unit, the co-proposed subtitle D approach requires post-closure care modeled after the requirements in 258.60. The owner or operator of the disposal unit must conduct post-closure care for 30 years. EPA is proposing to allow facilities to conduct post-closure care for a decreased length of time if the owner or operator demonstrates that (1) the reduced period is sufficient to protect human health and the environment, as certified by an independent registered professional engineer; (2) notice is provided to the state that the demonstration has been placed in the operating record and on the owner's or operator's Internet site; and (3) the owner or operator notifies the state of the company's findings. The proposed rule also allows an increase in this period, again, with notification to the state, if the owner or operator of the CCR landfill or surface impoundment determines that it is necessary to protect human health and the environment. The 30-year period is consistent with the period required under the criteria for MSWLFs, as well as under the subtitle C interim status requirements. EPA has no information to indicate that a different period would be appropriate for post-closure care for CCR disposal units. EPA recognizes that state oversight can be critical to ensure that post-closure care is conducted for the length of time necessary to protect human health and the environment; however, EPA also recognizes that there is no set length of time for post-closure care that will be appropriate for all possible sites, and all possible conditions. EPA therefore solicits comment on alternative methods to account for different conditions, yet still provide methods of oversight to assure facility accountability.

During post-closure care, the owner or operator of the disposal unit is required to maintain the integrity and effectiveness of any final cover, maintain and operate the leachate collection and removal system in accordance with the leachate collection and removal system requirements described above, maintain the groundwater monitoring system and monitor the groundwater in accordance with the groundwater monitoring requirements described above, and place the maintenance plan in the operating record and on the company's Internet site.

EPA is also considering whether to adopt a number of provisions to increase the flexibility available under these requirements. For example, EPA is considering a self-certified stoppage of leachate management, such as provided for in 258.61(a)(2), and is soliciting public comment on the need for such a provision, as well as its propriety, in light of the absence of guaranteed state oversight. EPA is also considering whether to adopt a provision to allow any other disturbance, provided that the owner or operator of the CCR landfill or surface impoundment demonstrates that disturbance of the final cover, liner or other component of the containment system, including any removal of CCRs,

will not increase the potential threat to human health or the environment. The demonstration would need to be certified by an independent registered professional engineer, and notification provided to the state that the demonstration had been placed in the operating record and on the owner's or operator's Internet site. In the MSWLF rule, EPA limited this option to approved states, on the ground that, "under very limited circumstances it may be possible or desirable to allow certain post-closure uses of land, including some recreational uses, without posing a significant threat to human health and the environment, but such situations are likely to be very limited and need to be considered very carefully." Commenters interested in supporting such an option should address why such a provision would nevertheless be appropriate in this context. In this regard, EPA would also be interested in suggestions for other mechanisms providing facility flexibility and/or oversight.

9. Financial Assurance

EPA currently requires showings of financial assurance under multiple programs, including for RCRA subtitle C hazardous waste treatment, storage and disposal facilities; the RCRA subtitle I underground storage tank program; and under other statutory authorities. Financial assurance requirements generally help ensure that owners and operators adequately plan for future costs, and help ensure that adequate funds will be available when needed to cover these costs if the owner or operator is unable or unwilling to do so; otherwise, additional governmental expenditures may otherwise be necessary to ensure continued protection of human health and the environment. Financial assurance requirements also encourage the development and implementation of sound waste management practices both during and at the end of active facility operations, since the associated costs of any financial assurance mechanism should be less when activities occur in an environmentally protective manner.

Today's proposed RCRA subtitle D alternative does not include proposed financial responsibility requirements. Any such requirements would be proposed separately. Specifically, on January 6, 2010, EPA issued an advance notice of proposed rulemaking ("ANPRM"), identifying classes of facilities within the Electric Power Generation, Transmission, and Distribution industry, among others, as those for which it plans to develop, as necessary, financial responsibility requirements under CERCLA § 108(b). *See* Identification of Additional Classes of Facilities for Development of Financial Responsibility Requirements under CERCLA Section 108(b), 75 FR 816 (January 6, 2010). EPA solicits comments on whether financial responsibility requirements under CERCLA § 108(b) should be a key Agency focus should it regulate CCR disposal under a RCRA subtitle D approach. (By today's proposed rule, EPA is not reopening the comment period on the January 2010 ANPRM, which closed on April 6, 2010. *See* Identification of Additional Classes of Facilities for Development of Financial Responsibility Requirements under CERCLA Section 108(b), 75 FR 5715 (Feb. 4, 2010) (extending comment period to April 6, 2010).) However, EPA also solicits comment on existing state waste programs for financial assurance for CCR disposal facilities, and whether and how the co-proposed RCRA subtitle D regulatory approach might integrate with those programs.

10. Off-Site Disposal

Under a subtitle D regulation, regulated CCR wastes shipped off-site for disposal would have to be sent to facilities that meet the standards above.

11. Alternative RCRA Subtitle D Approaches

A potential modification to the subtitle D option that was evaluated in our Regulatory Impact Analysis (RIA) is what we have termed a subtitle "D prime" option. Under this modification, the regulations would not require the closure or installation of composite liners in existing surface impoundments; rather, these surface impoundments could continue to operate for the remainder of their useful life. New surface impoundments would be required to have composite liners. The other co-proposed subtitle D requirements would remain the same. This modification results in substantially lower costs, but also lower benefits as described in section XII, which presents costs and benefits of the RCRA subtitle C, D, and D prime options. EPA solicits comments on this approach.

Finally, another approach that has been suggested to EPA is a subtitle D regulation with the same requirements as spelled out in the co-proposal, for example, composite liners for new landfills and surface impoundments, groundwater monitoring, corrective action, closure, and post-closure care requirements as co-proposed in this notice; however, in lieu of the phase-out of surface impoundments, EPA would establish and fund a program for conducting annual (or other frequency) structural stability (assessments) of impoundments having a "High" or "Significant" hazard potential rating as defined by criteria developed by the U.S. Army Corps of Engineers for the National Inventory of Dams. EPA would conduct these assessments and, using appropriate enforcement authorities already available under RCRA, CERCLA, and/or the Clean Water Act, would require facilities to respond to issues identified with their surface impoundments. The theory behind this suggested approach is that annual inspections would be far more cost effective than the phase-out of surface impoundments—approximately $3.4 million annually for assessments versus $876 million annually for phase-out. EPA also solicits comments on this approach and its effectiveness in ensuring the structural integrity of CCR surface impoundments.

X. How would the proposed subtitle D regulations be implemented?

A. Effective Dates

The effective date of the proposed RCRA subtitle D alternative, if this alternative is ultimately promulgated, would be 180 days after promulgation of a final rule. Thus, except as noted below, owners and operators of CCR landfills and surface impoundments would need to meet the proposed minimum federal criteria 180 days after promulgation of the final rule. As noted elsewhere in today's preamble (*see* Section XI.), facilities would need to comply with the RCRA subtitle D criteria, irrespective of whether or not the states have adopted the standards. For the remaining requirements, the compliance dates would be as follows:

- For new CCR landfills and surface impoundments that are placed into service after the effective date of the final rule, the location restrictions and design criteria would apply the date that such CCR landfills and surface impoundments are placed into service.
- For existing CCR surface impoundments, the compliance date for the liner requirement is five years after the effective date of the final rule.
- For existing CCR landfills and surface impoundments, the compliance date for the groundwater monitoring requirements is one year after the effective date of the final rule.
- For new CCR landfills and surface impoundments, and lateral expansions of existing CCR landfills and surface impoundments, the groundwater monitoring requirement must be in place and in compliance with the

groundwater monitoring requirements before CCRs can be placed in the unit.

Note: As discussed in Section IX, if EPA determines that financial assurance requirements would be implemented pursuant to CERCLA 108(b) authority, the compliance date for this provision would be the date specified in those regulations.

B. Implementation and Enforcement of Subtitle D Requirements

As stated previously, EPA has no authority to implement and enforce the co-proposed RCRA subtitle D regulation. Therefore, the proposed RCRA subtitle D standards have been drafted so that they can be self implementing—that is, the facilities can comply without interaction with a regulatory agency. EPA can however take action under section 7003 of RCRA to abate conditions that "may present an imminent and substantial endangerment to health or the environment." EPA could also use the imminent and substantial endangerment authorities under CERCLA, or under other federal authorities, such as the Clean Water Act, to address those circumstances where a unit may pose a threat.

In addition, the federal RCRA subtitle D requirements would be enforceable by states and by citizens using the citizen suit provisions of RCRA 7002. Under this section, any person may commence a civil action on his own behalf against any person, who (1) is alleged to be in violation of any permit, standard, regulation * * * which has become effective pursuant to this chapter" Because a RCRA subtitle D proposal relies heavily on citizen enforcement, our proposal requires facilities to make any significant information related to their compliance with the proposed requirements publicly available.

XI. Impact of a Subtitle D Regulation on State Programs

Under today's co-proposal, EPA is proposing to establish minimum nationwide criteria under RCRA subtitle D as one alternative. If the Agency were to choose to promulgate such nationwide criteria, EPA would encourage the states to adopt such criteria; however, the Agency has no authority to require states to adopt such criteria, or to implement the criteria upon their finalization. Nor does EPA have authority in this instance to require federal approval procedures for state adoption of the minimum nationwide criteria. States would be free to develop their own regulations and/or permitting programs using their solid waste laws or other state authorities. While states are not required to adopt such minimum nationwide criteria, some states (about 25) incorporate federal regulations by reference or have specific state statutory requirements that their state program can be no more stringent than the federal regulations (about 12, with varying degrees of exceptions). In those cases, EPA would expect that if the minimum nationwide criteria were promulgated, these states would adopt them, consistent with their state laws and administrative procedures.

If the states do not adopt or adopt different standards for the management of CCRs, facilities would still have to comply with the co-proposed subtitle D criteria, if finalized, independently of those state regulations. Thus, even in the absence of a state program, CCR landfills and CCR surface impoundments would be required to meet the proposed federal minimum criteria as set out in 40 CFR part 257, subpart D. As a result and to make compliance with the requirements as straightforward as possible, we have drafted the proposed criteria so that facilities are able to implement the standards without interaction with regulatory officials—that is, the requirements are self-implementing. Also, even in the absence of a state regulatory program for CCRs, these federal minimum criteria are enforceable by citizens and by states using the citizen suit provision of RCRA (Section 7002). EPA is also able to take action under RCRA Section 7003 to abate conditions that may pose an imminent and substantial endangerment to human health or the environment or and can rely on other federal authorities. *See* the previous section for a full discussion of this issue.

XII. Impacts of the Proposed Regulatory Alternatives

A. What are the economic impacts of the proposed regulatory alternatives?

EPA prepared an analysis of the potential costs and benefits associated with this action contained in the "Regulatory Impact Analysis" (RIA). A copy of the RIA is available in the docket for this action and the analysis is briefly summarized here. For purposes of evaluating the potential economic impacts of the proposed rule, the RIA evaluated baseline (*i.e.,* current) management of CCRs consisting of two baseline components: (1) The average annual cost of baseline CCR disposal practices by the electric utility industry, and (2) the monetized value of existing CCR beneficial uses in industrial applications. Incremental to this baseline, the RIA estimated (1) future industry compliance costs for CCR disposal associated with the regulatory options described in today's action, and (2) although not completely quantified or monetized, three categories of potential future benefits from RCRA regulation of CCR disposal consisting of (a) Groundwater protection benefits at CCR disposal sites, (b) CCR impoundment structural failure prevention benefits, and (c) induced future annual increases in CCR beneficial use. The findings from each of these main sections of the RIA are summarized below. These quantified benefit results are based on EPA's initial analyses using existing information and analytical techniques.

1. Characterization of Baseline Affected Entities and CCR Management Practices

Today's action will potentially affect CCRs generated by coal-fired electric utility plants in the NAICS industry code 221112 (*i.e.,* the "Fossil Fuel Electric Power Generation" industry within the NAICS 22 "Utilities" sector code). Based on 2007 electricity generation data published by the Energy Information Administration (EIA), the RIA estimated a total of 495 operational coal-fired electric utility plants in this NAICS code could be affected by today's action. These plants are owned by 200 entities consisting of 121 companies, 18 cooperative organizations, 60 state or local governments, and one Federal Agency. A sub-total of 51 of the 200 owner entities (*i.e.,* 26%) may be classified as small businesses, small organizations, or small governments.

Based on the most recent (2005) EIA data on annual CCR tonnages generated and managed by electric utility plants greater than 100 megawatts nameplate capacity in size, supplemented with additional estimates made in the RIA for smaller sized electric utility plants between 1 and 100 megawatts capacity, these 495 plants generate about 140 million tons of CCRs annually, of which 311 plants dispose 57 million tons in company-owned landfills, 158 plants dispose 22 million tons in company-owned surface impoundments, and an estimated 149 plants may send upwards of 15 million tons of CCRs to offsite disposal units owned by other companies (*e.g.,* NAICS 562 commercial waste management service companies). Based on lack of data on the type of offsite CCR disposal units, and the fact that it costs much more to transport wet CCRs than dry CCRs (*i.e.,* CCRs which have been de-watered), the RIA assumes all offsite CCR disposal units are landfills. Because some plants use more than one CCR management method, these management plant counts exceed 495 total plants. Based on the estimates

developed for the RIA, total CCR disposal is about 94 million tons annually which is two-thirds of annual CCR generation. (EPA notes that the alternative, lower CCR generation and disposal estimates of 131 million tons and 75 million tons cited elsewhere in today's notice were derived from different and less comprehensive ACAA and EIA survey data sources, respectively, that do not include tonnage estimates for plants between 1 and 100 megawatt capacity.) In addition, 272 of the 495 plants supply CCRs which are not disposed for beneficial uses in at least 14 industries, of which 28 of the 272 plants solely supply CCRs for beneficial uses. As of 2005, CCR beneficial uses (*i.e.,* industrial applications) involved about 47 million tons annually representing one-third of annual CCR generation, which the RIA estimates may grow to an annual quantity of 62 million tons by 2009. For 2008, the American Coal Ash Association estimates CCR beneficial use has grown to 60.6 million tons.[155]

2. Baseline CCR Disposal

For each of the 467 operating electric utility plants which dispose CCRs onsite or offsite (28 of the 495 total plants solely send their CCRs for beneficial use and not disposal), the RIA estimated baseline engineering controls at CCR disposal units and associated baseline disposal costs for two types of CCR disposal units: landfills and surface impoundments. Impoundments are sometimes named by electricity plant personnel as basins, berms, canals, cells, dams, embankments, lagoons, pits, ponds, reservoirs, or sumps. The baseline is defined as existing (current) conditions with respect to the presence or absence of 10 types of environmental engineering controls and eight ancillary regulatory elements, plus projection of future baseline conditions of CCR disposal units without regulation over the 50-year future period-of-analysis—2012 to 2061—applied in the RIA. A 50-year future period was applied in the RIA to account for impacts of the proposed regulatory options which are specific only to future new disposal units given average lifespans of over 40-years. Existing conditions were determined based on review of a sample of current state government regulations of CCR disposal in 34 states, as well as limited survey information on CCR disposal units from studies published in 1995, 1996, and 2006 about voluntary engineering controls installed for CCR disposal units at some electric utility plants. The 10 baseline engineering controls evaluated in the RIA are (1) Groundwater monitoring, (2) bottom liners, (3) leachate collection and removal systems, (4) dust controls, (5) rainwater run-on and run-off controls, (6) financial assurance for corrective action, disposal unit closure, and post-closure care, (7) disposal unit location restrictions, (8) closure capping of disposal units, (9) post-closure groundwater monitoring, and (10) CCR storage design and operating standards prior to disposal (**Note:** Although listed here, this 10th element was not estimated in the RIA because of EPA's lack of information on baseline CCR storage practices). This specific set of engineering controls represents the elements of the RCRA 3004(x) custom-tailored technical standards proposed in today's notice for the RCRA subtitle C option. The eight ancillary elements evaluated in the RIA are (11) offsite transport and disposal, (12) disposal unit structural integrity inspections, (13) electricity plant facility-wide environmental investigations, (14) facility-wide corrective action requirements, (15) waste disposal permits, (16) state government regulatory enforcement inspections, (17) environmental release remediation requirements, and (18) recordkeeping and reporting to regulatory agencies. Some states require many of these technical standards for future newly-constructed CCR disposal units, some states require them for existing units, and some states have few or no regulatory requirements specific to CCR disposal and thus were not estimated in the baseline cost. Furthermore, some of the ancillary elements are only relevant to the regulatory options based on subtitle C as co-proposed in today's notice. The percentage of CCR landfills with baseline controls ranged from 61% to 81%, and the percentage of CCR surface impoundments with baseline controls ranged from 20% to 49%, depending upon the type of control. Based on this estimation methodology, the RIA estimates the electric utility industry spends an average of $5.6 billion per year for meeting state-required and company voluntary environmental standards for CCR disposal. Depending upon state location for any given electricity plant (which determines baseline regulatory requirements), and whether any given plant disposes CCRs onsite or offsite, this baseline cost is equivalent to an average cost range of $2 to $80 per ton of CCRs disposed of.

3. Baseline CCR Beneficial Use

In addition to evaluating baseline CCR disposal practices, the RIA also estimated the baseline net benefits associated with the 47 million tons per year (2005) of industrial beneficial uses of CCRs. CCRs are beneficially used nationwide as material ingredients in at least 14 industrial applications according to the American Coal Ash Association: (1) Concrete, (2) cement, (3) flowable fill, (4) structural fill, (5) road base, (6) soil modification, (7) mineral filler in asphalt, (8) snow/ice control, (9) blasting grit, (10) roofing granules, (11) placement in mine filling operations,[156] (12) wallboard, (13) waste solidification, and (14) agriculture. The baseline annual sales revenues (as of 2005) received by the electric utility industry for sale of CCRs used in these industrial applications are estimated at $177 million per year. In comparison, substitute industrial ingredient materials (*e.g.,* portland cement, quarried stone aggregate, limestone, gypsum) would cost industries $2,477 million per year. Thus, the beneficial use of CCRs provides $2,300 million in annual cost savings to these industrial applications, labeled economic benefits in the RIA. Based on the lifecycle materials and energy flow economic framework presented in the RIA, although only based on limited data representing 47% of annual CCR beneficial use tonnage involving only three of the 14 industrial applications (*i.e.,* concrete, cement and wallboard), baseline lifecycle benefits of beneficially using CCRs compared to substitute industrial materials are (a) $4,888 million per year in energy savings, (b) $81 million per year in water consumption savings, (c) $365 million per year in greenhouse gas (*i.e.,* carbon dioxide and methane) emissions reductions, and (d) $17,772 million per year in other air pollution reductions. Altogether, industrial beneficial uses of CCRs provide over $23 billion in annual environmental benefits as of 2005. In addition, baseline CCR beneficial use provides $1,830 million per year in industrial raw materials costs savings to beneficial users, and $2,927 million per year in avoided CCR disposal cost to the electric utility industry as of 2005. The sum of environmental benefits,

[155] Note that ACAA's definition of beneficial use does not align with that used by EPA in this rulemaking. For example, ACAA includes minefilling as a beneficial use, where EPA classifies it as a separate category of use.

[156] While today's proposed rule does not deal directly with the mine filling of CCRs, the RIA includes it as a baseline beneficial use because the RIA uses the categories identified by the American Coal Ash Association (*http://acaa.affiniscape.com/displaycommon.cfm?an=1&subarticlenbr=3*). However, as noted previously in today's notice, the Agency is working with OSM of the Department of Interior on the placement of CCRs in mine fill operations.

industrial raw materials costs savings, and CCR disposal cost savings, $27.9 billion per year, gives the baseline level of what the RIA has labeled social benefits from the beneficial use of CCRs.

4. Estimated Costs for RCRA Regulation of CCR Disposal

The RIA includes estimates of the costs associated with the options described in today's notice are summarized here: (1) RCRA subtitle C regulation of CCRs as a "special waste"; (2) RCRA subtitle D regulation as "non-hazardous waste"; and (3) the subtitle "D prime" options. Full descriptions of each option are presented in a prior section of today's notice. The RIA assumes that the engineering controls that would be established under the RCRA subtitle C option would be tailored on the basis of RCRA section 3004(x). The controls for the RCRA subtitle D option are identical to the subtitle C option. The controls under the subtitle "D prime" option would be identical as well, except that existing surface impoundments would not have to close or be dredged and have composite liners installed within five years of the effective date of the regulation. The RIA also assumes all three options retain the existing Bevill exemption for CCR beneficial uses.

The estimated costs for each option are incremental to the baseline, and are estimated in the RIA using both an average annualized and a present value equivalent basis over a 50-year period-of-analysis (2012 to 2061) using both a 7% and an alternative 3% discount rate. These two alternative discount rates are required by the Office of Management and Budget's September 2003 "Regulatory Analysis" Circular A–4. For the purpose of summary here, only the 7% discount rate results are presented for each option because the 7% rate represents the "base case" in the RIA for the reason that most of the regulatory compliance costs will be incurred by industry (*i.e.,* private capital). On an average annualized basis, the estimated regulatory compliance costs for the three options are $1,474 million (subtitle C special waste), $587 million (subtitle D), and $236 million (subtitle "D prime") per year. On a present value basis discounted at 7% over the 50-year future period-of-analysis applied in the RIA, estimated future regulatory compliance costs for the three options total $20,349 million, $8,095 million, and $3,259 million present value, respectively. EPA requests public comment on all data sources and analytical approaches.

5. Benefits for RCRA Regulation of CCR Disposal

The potential environmental and public health benefits of CCR regulation estimated and monetized in the RIA include three categories:

1. Groundwater protection benefits consisting of (a) human cancer prevention benefits and (b) avoided groundwater remediation costs at CCR disposal sites;
2. CCR impoundment structural failure prevention benefits (*i.e.,* cleanup costs avoided); and
3. Induced future increase in industrial beneficial uses of CCRs.

As was done with the cost estimates described above, the RIA estimated benefits both at the 7% and 3% discount rates using the same 50-year period-of-analysis. However, only the benefit estimates based on the 7% rate are summarized here. While the RIA focused on monetizing these three impact categories, there are also human non-cancer prevention benefits, ecological protection benefits, surface water protection benefits, and ambient air pollution prevention benefits, which are not monetized in the RIA, but qualitatively described below.

i. Groundwater Protection Benefits

The RIA estimated the benefits of reduced human cancer risks and avoided groundwater remediation costs associated with controlling arsenic leaching from CCR landfills and surface impoundments. These estimates are based on EPA's risk assessment (described elsewhere in today's notice), which predicts arsenic leaching rates using SPLP and TCLP data. Furthermore, recent research and damage cases indicate that these leaching tests under-predict risks from dry disposal.[157] Therefore, the groundwater protection benefits may be underestimated in the RIA. The RIA based estimation of future human cancer cases avoided on the individual "excess" lifetime cancer probabilities reported in the EPA risk assessment, although the RIA also used more recent (2001) science published by the National Research Council on arsenic carcinogenicity.

The RIA estimated groundwater protection benefits by categorizing electric utility plants according to their individual types of CCR disposal units (*i.e.,* landfill or impoundment) and presence/types of liners in those units. For each category, GIS data were used to determine the potentially affected populations of groundwater drinkers residing within 1-mile of the disposal units. Results from the risk assessment were applied to these populations by using a linear extrapolation, starting from a risk of zero to the peak future risk as demonstrated by the risk assessment. The count of people who might potentially get cancer was then adjusted upward to account for the more recent and more widely accepted arsenic carcinogenicity research by the National Research Council.[158] The RIA then segregated the future cancer counts into lung cancers and bladder cancers, as well as into those that were predicted to result in death versus those that were not. The RIA monetized each of these cancer sub-categories using EPA-published economic values for statistical life and cost of illness.

The RIA further adjusted these monetized future cancer counts, to take into account existing state requirements for groundwater monitoring at CCR disposal units, such that fewer cancer

[157] Recent EPA research demonstrates that CCRs can leach significantly more aggressively under different pH conditions potentially present in disposal units. In the EPA Office of Research & Development report "Characterization of Coal Combustion Residues from Electric Utilities—Leaching and Characterization Data," EPA–600/R–09/151, Research Triangle Park, NC, December 2009, CCRs from 19 of the 34 facilities evaluated in the study exceeded at least one of the Toxicity Characteristic regulatory values for at least one type of CCR (*e.g.,* fly ash or FGD residue) at the self-generated pH of the material. This behavior likely explains the rapid migration of constituents from disposal sites like Chesapeake, VA and Gambrills, MD. *See also* the EPA Office of Research & Development reports (a) "Characterization of Mercury-Enriched Coal Combustion Residues from Electric Utilities Using Enhanced Sorbents for Mercury Control," EPA 600/R–06/008, January 2006; and (b) Characterization of Coal Combustion Residues from Electric Utilities Using Wet Scrubbers for Multi-Pollutant Control, EPA/600/R–08/077, July 2008.

[158] EPA's current Integrated Risk Information System (IRIS) has a cancer slope factor for arsenic developed in 1995. This slope factor is based on skin cancer incidence and was used in the 2010 EPA risk assessment. Skin cancer is a health endpoint associated with lower fatality risk than lung and bladder cancers induced by arsenic. Since the IRIS slope factors were developed, quantitative data on lung and bladder cancers have become available, and the skin cancer based slope factors no longer represent the current state of the science for health risk assessment for arsenic. The National Research Council (NRC) published the report, "Arsenic in Drinking Water: 2001 Update" (2001) which reviewed the available toxicological, epidemiological, and risk assessment literature on the health effects of inorganic arsenic, building upon the NRC's prior report, "Arsenic in Drinking Water" (NRC 1999). The 2001 report, developed by an eminent committee of scientists with expertise in arsenic toxicology and risk assessment provides a scientifically sound and transparent assessment of risks of bladder and lung cancers from inorganic arsenic. EPA's Science Advisory Board is currently reviewing EPA's new proposed IRIS cancer slope factors based on bladder and lung cancer. Because the more recent NRC scientific information is available, the RIA (2010) uses the NRC arsenic cancer data for the estimate of benefits associated with cancers avoided by the proposed regulation of CCR.

cases than initially projected would ultimately occur from early detection of groundwater contamination in those states. Therefore, a baseline was established for the operation of state regulatory and remedial programs which led to a reduction in expected cancer cases in states with existing groundwater protection requirements. However, once groundwater contamination was found in those states, remediation costs would be incurred. Thus, the RIA also accounted for these costs under each of the regulatory options as well, thus avoiding possible double-counting of cancer cases and remediation costs. On an average annualized basis, the human cancer prevention component of the groundwater protection benefit category for the three options are $37 million (RCRA subtitle C special waste), $15 million (RCRA subtitle D), and $8 million (subtitle "D prime") per year. On a present value basis, the human cancer prevention benefit totals $504 million, $207 million, and $104 million present value, respectively. On an average annualized basis, the estimated avoided groundwater remediation cost benefit component of the groundwater protection benefit category for the three options are $34 million (RCRA subtitle C special waste), $12 million (RCRA subtitle D), and $6 million (subtitle "D prime") per year. On a present value basis, the avoided remediation cost benefit totals to $466 million, $168 million, and $84 million present value, respectively. Added together on an average annualized basis, these two groundwater protection benefit components total to $71 million (RCRA subtitle C special waste), $27 million (RCRA subtitle D), and $14 million (subtitle "D prime") per year. On a present value basis, the groundwater protection benefit category totals to $970 million, $375 million, and $188 million present value, respectively.

ii. Impoundment Structural Failure Prevention Benefits

The December 2008 CCR surface impoundment collapse at the Tennessee Valley Authority's Kingston, Tennessee coal-fired electricity plant illustrated that structural failures of large CCR impoundments can lead to catastrophic environmental releases and large cleanup costs. The RIA estimated the benefit of avoiding future cleanup costs for impoundment failures, which the structural integrity inspection requirement of all regulatory options, and the future conversion or retrofitting of existing or new impoundments (under the subtitle C, subtitle D, and subtitle "D prime" options) would be expected to prevent.

The RIA based the estimate of future cleanup costs avoided on information contained in EPA's 2009 mail survey [159] of 584 CCR impoundments operated by the electric utility industry. In response to the survey request for information on known spills or non-permitted releases from CCR impoundments within the last 10 years, revealed 42 CCR impoundment releases spanning 1995 to 2009. Particularly, there were five significant releases between 4,950 cubic yards and 5.4 million cubic yards of CCRs, and one catastrophic release of 5.4 million cubic yards of CCRs during this time period at coal fired power plants. Given these historic releases, the RIA projected the probability of future impoundment releases using a Poisson distribution. In addition to this approach, the RIA formulated two alternative failure scenarios based on 96 high-risk CCR impoundments identified as at least 40 feet tall and at least 25 years old. The two alternative failure scenarios assumed impoundment failure rates involving these 96 impoundments of 10% and 20%, respectively. On an average annualized basis ranging across these three alternative failure probability estimation methods (scenarios), the avoided cleanup cost benefit category for the three options is estimated at $128 million to $1,212 million (subtitle C special waste), $58 million to $550 million (subtitle D), and $29 million to $275 million (subtitle "D prime") per year. On a present value basis, the avoided cleanup cost benefit category totals $1,762 million to $16,732 million (RCRA subtitle C special waste), $793 million to $7,590 million (RCRA subtitle D), and $405 million to $3,795 million present value (RCRA subtitle "D prime"), respectively.

iii. Benefit of Induced Future Increase in Industrial Beneficial Uses of CCRs

The third and final potential benefit category evaluated in the RIA includes the potential effects of RCRA regulation of CCR disposal on future annual tonnages of CCR beneficial use. As its base case, the RIA estimates an expected future increase in beneficial use induced by the increased costs of disposing CCR in RCRA-regulated disposal units. The RIA also evaluates the potential magnitude of a future decrease in beneficial use as a result of a potential "stigma" effect under the subtitle C option. Both scenarios are based on a baseline consisting of (a) projecting the future annual tonnage of CCR generation by the electric utility industry in relation to the Energy Information Administration's (EIA) future annual projection of coal consumption by the electric utility industry, and (b) projecting the future baseline growth in CCR beneficial use relative to the historical growth trendline (*i.e.,* absent today's proposed regulation).

For the induced increase "base case" scenario, the compliance costs for each regulatory option represent an "avoided cost incentive" to the electric utility industry to shift additional CCRs from disposal to beneficial use. Proportional to the estimated cost for each option, the RIA applied a beneficial use market elasticity factor to the projected baseline future growth in beneficial use to simulate the induced increase. On an average annualized basis, the monetized value—based on the same unitized (*i.e.,* per-ton) monetized social values assigned to the lifecycle benefits of baseline CCR beneficial uses—of the estimated potential induced increases in future annual CCR beneficial use tonnage for the three options are $6,122 million (RCRA subtitle C special waste), $2,450 million (RCRA subtitle D), and $980 million (subtitle "D prime") per year. On a present value basis, the potential induced increases in beneficial use totals to $84,489 million (RCRA subtitle C special waste), $33,796 million (RCRA subtitle D), and $13,518 million (subtitle "D prime") present value, respectively.

The RIA also monetized the alternative "stigma" scenario of future reduction in beneficial use induced by the RCRA subtitle C option. The RIA formulated assumptions about the percentage future annual tonnage reductions which might result to some of the 14 beneficial use markets. For example, federally purchased concrete was assumed to stay at baseline levels because of the positive influence of comprehensive procurement guidelines that are already in place to encourage such types of beneficial uses. Conversely, the levels of non-federally purchased concrete were assumed to decrease relative to the baseline. On an average annualized basis, the monetized value—based on the same unitized (*i.e.,* per-ton) monetized social values assigned to the lifecycle benefits of baseline CCR beneficial uses—of the potential "stigma" reduction in future annual CCR beneficial use for the RCRA subtitle C option is $16,923 million per year cost. On a present value basis, the potential "stigma" reduction in beneficial use totals to $233,549 million

[159] Descriptive information and electric utility industry responses to EPA's 2009 mail survey is available at the survey webpage *http://www.epa.gov/waste/nonhaz/industrial/special/fossil/surveys/.*

present value cost. The RIA did not estimate a potential "stigma" reduction effect on the RCRA subtitle D or subtitle "D prime" regulatory options.

B. Benefits Not Quantified in the RIA

1. Non-Quantified Plant and Wildlife Protection Benefits

EPA's risk assessment estimated significant risks of adverse effects to plants and wildlife, which are confirmed by the existing CCR damage cases and field studies published in peer-reviewed scientific literature. Such reported adverse effects include: (a) Elevated selenium levels in migratory birds, (b) wetland vegetative damage, (c) fish kills, (d) amphibian deformities, (e) snake metabolic effects, (f) plant toxicity, (g) elevated contaminant levels in mammals as a result of environmental uptake, (h) fish deformities, and (i) inhibited fish reproductive capacity. Requirements in the proposed rule should prevent or reduce these impacts in the future by limiting the extent of environmental contamination and thereby reducing the levels directly available.

2. Non-Quantified Surface Water Protection Benefits

In EPA's risk assessment, recreational fishers could be exposed to chemical constituents in CCR via the groundwater-to-surface water exposure pathway. Furthermore, State Pollutant Discharge Elimination System (SPDES) and National Pollutant Discharge Elimination System (NPDES) discharges from CCR wet disposal (*i.e.,* impoundments) likely exceed the discharges from groundwater to surface water. Thus, exposure to arsenic via fish consumption could be significant. However, EPA expects that most electric utility plants will eventually switch to dry CCR disposal (or to beneficial use), a trend which is discussed in the RIA. Such future switchover will reduce potential future exposures to these constituents from affected fish.

3. Non-Quantified Ambient Air Protection Benefits

Another impact on public health not discussed in the RIA is the potential reduction of excess cancer cases associated with hexavalent chromium inhaled from the air. As estimated in the RIA, over six million people live within the Census population data "zip code tabulation areas" for the 495 electric utility plant locations. Thus, the potential population health benefits of RCRA regulation may be quite large. Inhalation of hexavalent chromium has been shown to cause lung cancer.[160] By requiring fugitive dust controls, the proposed rule would reduce inhalation exposure to hexavalent chromium near CCR disposal units that are not currently required to control fugitive dust.

Furthermore, several non-cancer health effects associated with CCRs are a result of particulate matter inhalation due to dry CCR disposal. Human health effects for which EPA is evaluating causality due to particulate matter exposure include (a) Cardiovascular morbidity, (b) respiratory morbidity, (c) mortality, (d) reproductive effects, (e) developmental effects, and (f) cancer.[161] The potential for and extent of adverse health effects due to fugitive dusts from dry CCR disposal was demonstrated in the 2009 EPA report "Inhalation of Fugitive Dust: A Screening Assessment of the Risks Posed by Coal Combustion Waste Landfills—DRAFT," which is available in the docket for today's co-proposed rules. The co-proposed rules' fugitive dust controls would serve to manage such potential risks by bringing them to acceptable levels.

CCR dust (and other types of particulate matter) can also be carried over long distances by wind and then settle on ground or water. The effects of this settling could include: (a) Changing the pH of lakes and streams; (b) changing the nutrient balance in coastal waters and large river basins; (c) depleting nutrients in soil; (d) damaging sensitive forests and farm crops; and (e) affecting the diversity of ecosystems.[162] Additionally, fine particulates are known to contribute to haze.[163] Thus, the fugitive dust controls contained in the proposed rule would improve visibility, and reduce the environmental impacts discussed above.

C. Comparison of Costs to Benefits for the Regulatory Alternatives

For purposes of comparing the estimated regulatory compliance costs to the monetized benefits for each regulatory option, the RIA computed two comparison indicators: Net benefits (*i.e.,* benefits minus costs), and benefit/cost ratio (*i.e.,* benefits divided by costs). The results of each indicator are displayed in the following tables (Table 10, Table 11 and Table 12) for three regulatory options, based on the 7% discount rate and the 50-year period-of-analysis applied in the RIA. There are three tables because three different scenarios were analyzed concerning potential impacts on beneficial use of CCRs impact under the regulatory options.

The three tables below represent three possible outcomes regarding impacts of the rule upon the beneficial use of CCR. In the first table, EPA presents the potential impact scenario that we view to be most likely. This first scenario assumes that the increased cost of disposal from regulation under subtitle C will encourage industry to seek out additional markets and greatly increase their beneficial use of CCRs. In the second table, EPA presents a negative effect on beneficial use, based on stigma, and the possibility of triggering use restrictions under state regulation and private sector standards due to subtitle C regulation. In the final table, EPA presents a scenario where beneficial use continues on its current path, without any changes as a result of the rule. On the basis of past experience, EPA believes that it is likely that recycling rates will increase as presented in the first scenario. Comments are requested on the impact of stigma on the beneficial use of CCRs.

TABLE 10—COMPARISON OF REGULATORY BENEFITS TO COSTS

[$Millions @ 2009$ prices and @ 7% discount rate over 50-year future period-of-analysis 2012 to 2061]

	Subtitle C "Special Waste"	Subtitle D	Subtitle "D prime"
A. Present Values:			
1. Regulatory Costs (1A+1B+1C):	$20,349	$8,095	$3,259.
1A. Engineering Controls	$6,780	$3,254	$3,254.

[160] ATSDR Texas. *Available at: http://www.atsdr.cdc.gov/toxfaq.html.*

[161] Source: EPA Office of Research & Development report "Integrated Science Assessment for Particulate Matter: First External Review Draft," EPA/600/R–08/139, 2008.

[162] Source: U.S. EPA Office of Air & Radiation, Particulate Matter "Health and Environment" Web site at *http://www.epa.gov/particles/health.html.*

[163] *Ibid;* and also *see http://www.intheairwebreathe.com/html/photo_gallery.html.*

TABLE 10—COMPARISON OF REGULATORY BENEFITS TO COSTS—Continued

[$Millions @ 2009$ prices and @ 7% discount rate over 50-year future period-of-analysis 2012 to 2061]

	Subtitle C "Special Waste"	Subtitle D	Subtitle "D prime"
1B. Ancillary Regulatory Requirements.	$1,480	$5	$5.
1C. Conversion to Dry CCR Disposal.	$12,089	$4,836	$0.
2. Regulatory Benefits (2A+2B+2C+2D):	$87,221 to $102,191	$34,964 to $41,761	$14,111 to $17,501.
2A. Monetized Value of Human Cancer Cases Avoided.	$504	$207	$104.
2B.Groundwater Remediation Costs Avoided.	$466	$168	$84.
2C. CCR Impoundment Failure Cleanup Costs Avoided.	$1,762 to $16,732	$793 to $7,590	$405 to $3,795.
2D. Included Future Increase in CCR Beneficial Use.	$84,489	$33,796	$13,518.
3. Net Benefits (2–1)	$66,872 to $81,842	$26,869 to $33,666	$10,852 to $14,242.
4. Benefit/Cost Ratio (2/1)	4.286 to 5.022	4.319 to 5.159	4.330 to 5.370.
B. Average Annualized Equivalent Values:*.			
1. Regulatory Costs (1A+1B+1C)	$1,474	$587	$236.
1A. Engineering Controls	$491	$236	$236.
1B. Ancillary Regulatory Requirements.	$107	<$1	<$1.
1C. Conversion to Dry CCR Disposal.	$876	$350	$0.
2. Regulatory Benefits (2A+2B+2C+2D):	$6,320 to $7,405	$2,533 to $3,026	$1,023 to $1,268.
2A. Monetized Value of Human Cancer Cases Avoided.	$37	$15	$8.
2B. Groundwater Remediation Costs Avoided.	$34	$12	$6.
2C. CCR Impoundment Failure Cleanup Costs Avoided.	$128 to $1,212	$58 to $550	$29 to $275.
2D. Included Future Increase in CCR Beneficial Use.	$6,122	$2,450	$980.
3. Net Benefits (2–1)	$4,845 to $5,930	$1,947 to $2,439	$786 to $1,032.
4. Benefit/Cost Ratio (2/1)	4.286 to 5.022	4.319 to 5.159	4.330 to 5.370.

* **Note:** Average annualized equivalent values calculated by multiplying the 50-year present values by a 50-year 7% discount rate "capital recovery factor" of 0.07246.

TABLE 11—COMPARISON OF REGULATORY BENEFITS TO COSTS UNDER SCENARIO #2—INDUCED BENEFICIAL USE DECREASE

[$Millions @ 2009$ prices @ 7% discount rate over 50-year future period-of-analysis 2012 to 2061]

	Subtitle C "Special Waste"	Subtitle D	Subtitle "D prime"
A. Present Values:			
1. Regulatory Costs (1A+1B+1C):	$20,349	$8,095	$3,259.
1A. Engineering Controls	$6,780	$3,254	$3,254.
1B. Ancillary Costs	$1,480	$5	$5.
1C. Conversion to Dry CCR Disposal.	$12,089	4,836	$0.
2. Regulatory Benefits (2A+2B+2C+2D):	($230,817) to ($215,847)	$1,168 to $7,965	$593 to $3,983.
2A. Monetized Value of Human Cancer Risks Avoided.	$504	$207	$104.
2B. Groundwater Remediation Costs Avoided.	$466	$168	$84.
2C. CCR Impoundment Failure Cleanup Costs Avoided.	$1,762 to $16,732	$793 to $7,590	$405 to $3,795.
2D. Induced Impact on CCR Beneficial Use.	($233,549)	N/A	N/A.
3. Net Benefits (2–1)	($251,166) to ($236,196)	($6,927) to ($130)	($2,666) to $724.
4. Benefit/Cost Ratio (2/1)	(11.343) to (10.607)	0.144 to 0.984	0.182 to 1.222.
B. Average Annualized Equivalent Values*.			
1. Regulatory Costs (1A+1B+1C):	$1,474	$587	$236.
1A. Engineering Controls	$491	$236	$236.
1B. Ancillary Costs	$107	$0.36	$0.36.

TABLE 11—COMPARISON OF REGULATORY BENEFITS TO COSTS UNDER SCENARIO #2—INDUCED BENEFICIAL USE DECREASE—Continued

[$Millions @ 2009$ prices @ 7% discount rate over 50-year future period-of-analysis 2012 to 2061]

	Subtitle C "Special Waste"	Subtitle D	Subtitle "D prime"
1C. Conversion to Dry CCR Disposal.	$876	$350	$0.
2. Regulatory Benefits (2A+2B+2C+2D):	($16,725) to ($15,640)	$85 to $577	$43 to $289.
2A. Monetized Value of Human Cancer Risks Avoided.	$37	$15	$8.
2B. Groundwater Remediation Costs Avoided.	$34	$12	$6.
2C. CCR Impoundment Failure Cleanup Costs Avoided.	$128 to $1,212	$57 to $550	$29 to $275.
2D. Induced Impact on CCR Beneficial Use.	($16,923)	NA	NA.
3. Net Benefits (2–1)	($18,199) to ($17,115)	($502) to ($9)	($193) to $52.
4. Benefit/Cost Ratio (2/1)	(11.347) to (10.610)	0.145 to 0.983	0.182 to 1.225.

* **Note:** Average annualized equivalent values calculated by multiplying 50-year present values by a 50-year 7% discount rate "capital recovery factor" of 0.07246.

TABLE 12—COMPARISON OF REGULATORY BENEFITS TO COSTS UNDER SCENARIO #3—NO CHANGE TO BENEFICIAL USE

[$Millions @ 2009$ prices @ 7% discount rate over 50-year future period-of-analysis 2012 to 2061]

Costs	Subtitle C "Special Waste"	Subtitle D	Subtitle "D prime"
A. Present Values:			
1. Regulatory Costs (1A+1B+1C):	$20,349	$8,095	$3,259.
1A. Engineering Controls	$6,780	$3,254	$3,254.
1B. Ancillary Costs	$1,480	$5	$5.
1C. Dry Conversion	$12,089	4,836	$0.
2. Regulatory Benefits (2A+2B+2C+2D):	$2,732 to $17,702	$1,168 to $7,965	$593 to $3,983.
2A. Monetized Value of Human Cancer Risks Avoided.	$504	$207	$104.
2B. Groundwater Remediation Costs Avoided.	$466	$168	$84.
2C. CCR Impoundment Failure Cleanup Costs Avoided.	$1,762 to $16,732	$793 to $7,590	$405 to $3,795.
2D. Induced Impact on CCR Beneficial Use.	$0	$0	$0.
3. Net Benefits (2–1)	($17,617) to ($2,647)	($6,927) to ($130)	($2,666) to $724.
4. Benefit/Cost Ratio (2/1)	0.134 to 0.870	0.144 to 0.984	0.182 to 1.222.
B. Average Annualized Equivalent Values.			
1. Regulatory Costs (1A+1B+1C):	$1,474	$587	$236.
1A. Engineering Controls	$491	$236	$236.
1B. Ancillary Costs	$107	$0.36	$0.36.
1C. Dry Conversion	$876	$350	$0.
2. Regulatory Benefits (2A+2B+2C+2D):	$198 to $1,283	$85 to $577	$43 to $289.
2A. Monetized Value of Human Cancer Risks Avoided.	$37	$15	$8.
2B. Groundwater Remediation Costs Avoided.	$34	$12	$6.
2C. CCR Impoundment Failure Cleanup Costs Avoided.	$128 to $1,212	$57 to $550	$29 to $275.
2D. Induced Impact on CCR Beneficial Use.	$0	$0	$0.
3. Net Benefits (2–1)	($1,277) to ($192)	($502) to ($9)	($193) to $52.
4. Benefit/Cost Ratio (2/1)	0.134 to 0.870	0.145 to 0.983	0.182 to 1.225.

* **Note:** Average annualized equivalent values calculated by multiplying 50-year present values by a 50-year 7% discount rate "capital recovery factor" of 0.07246.

EPA seeks comment on data and findings presented in the RIA, as well as on the cost and benefit estimation uncertainty factors identified in the RIA.

D. What are the potential environmental and public health impacts of the proposed regulatory alternatives?

The potential environmental and public health impacts of CCR regulation assessed within the RIA include the following three categories:

- Groundwater Benefits (human health benefits and cleanup costs avoided)
- Catastrophic Failure Benefits (catastrophic and significant releases avoided)
- Beneficial Use Benefits

The analyses of the groundwater impacts for the RIA were derived based on results from the risk assessment that was conducted for coal combustion residue landfills and surface impoundments. The second category of catastrophic impacts in the RIA was assessed, primarily based upon data on releases, as reported in EPA's 2009 Information Collection Request. And finally, the RIA assessment of beneficial use impacts was conducted using life-cycle analyses of current types and quantities of CCR beneficial use in the U.S. While the RIA focuses on monetizing these three impact categories, EPA notes that there are also likely noncancer health impacts, ecological impacts, other surface water impacts, and impacts on the ambient air, which are not monetized in this RIA.

1. Environmental and Public Health Impacts Estimated in the RIA

Groundwater Impacts

In the RIA, EPA estimated the benefits of reduced cancer risks and avoided groundwater remediation costs associated with controlling arsenic from landfills and surface impoundments that manage coal combustion residuals (CCRs). These estimates are based on EPA's risk assessment, which predicts leaching behavior using SPLP and TCLP data. Furthermore, recent research and damage cases indicate that these leaching tests may under-predict risks from dry disposal.[164] Therefore, the benefits estimated in this section are likely to underestimate the actual benefits provided by the proposed rule. EPA bases the cancer cases avoided on the individual "excess" lifetime cancer probabilities reported in the risk assessment, although for the present analysis, EPA uses more recent science on arsenic carcinogenicity, reflected in more recent NRC research.

The RIA began its groundwater impacts assessment by first segregating facilities by their individual type of liner and their respective Waste Management Unit (WMU) designations. For each class of facility, GIS data were used to determine the potentially affected populations of groundwater drinkers within 1-mile of the WMU. Results from the risk assessment were applied to these populations by using a linear extrapolation, starting from a risk of zero—to the peak future risk as demonstrated by the risk assessment. The number of people who might potentially get cancer was then adjusted to account for more recent research by the NRC.

Given the number of total potential cancers, EPA was able to use the same NRC data to split these cancers into lung cancers and bladder cancers, as well as into those that resulted in death versus those that did not. Once this subdivision was complete, EPA was then able to monetize these cancers using accepted economic values for a statistical life and cost of illness. In doing so, EPA was able to take account of both the potential lag in cancer cessation and the increase in value of a statistical life due to increases in income.

EPA also recognized that due to the relevant pre-existing state regulations in this area, fewer cancers than the number projected would ultimately occur. Therefore, a baseline was established for the operation of state regulatory and remedial programs. This led to the exclusion of some cancers where states would likely fill the gap in the absence of any EPA regulations. However, once contamination was found by states, cleanup costs would be incurred. Thus, EPA accounted for these costs under each of the regulatory options as well.

Once groundwater remediation costs and cancer costs under the baseline and each regulatory option were estimated, the aggregate benefits from each regulatory option were calculated (in comparison to the baseline). Net present value estimates were generated both at the 3% and 7% discount rate, as discussed in further detail within the RIA. To summarize, at a discount rate of 7%, the net present value of the groundwater benefits (including both the avoided cleanup costs and the value of cancer cases avoided) from the proposed rule totaled $970 million under the subtitle C option, and $375 million under the subtitle D option.

Catastrophic Failure Impacts

The 2008 surface impoundment failure at the TVA's Kingston, TN power plant illustrated that the improper handling of CCRs can lead to catastrophic releases. EPA's co-proposal for the management of CCRs includes requirements that would lead to all plants with surface impoundments converting to dry handling in landfills within 5-years of rule implementation. In the RIA, EPA estimated the avoided catastrophic failures and associated cleanup cost savings resulting from this provision of the rule.

First, EPA began by characterizing the releases reported in its 2009 Information Collection Request. In this data set, 42 releases were reported for the years 1995 through 2009. Particularly, there were 5 significant releases of between 1 million and 1 billion gallons, and one catastrophic release of over 1 billion gallons during this time period at coal fired power plants. Given these historic releases, EPA projected the occurrence of future releases using a Poisson distribution. EPA then estimated future avoided cleanup costs under the two proposed rules, and determined net present values of these benefits using both a 3% and 7% discount rate across the average and upper percentiles of risk demonstrated by the results of the Poisson distribution. The full details of these analyses are reported in the RIA. To summarize the results here at the 7% discount rate, the estimated net present value of avoided releases under the subtitle C requirements total $1,762 million on average (with the upper-bound estimates reaching from $3,140 to $4,177 million for the 90th and 99th percentiles). And under the subtitle D requirements and discount rate of 7%, the estimated net present value of avoided releases total $793 million on average (with the upper-bound estimates reaching from $1,413 to $1,880 million for the 90th and 99th percentiles).

In addition, a second Poisson distribution was developed as a sensitivity analysis, using an alternative historical rate of occurrence. This was done to see to what extent an increased release rate would pose in terms of greater risks. Given the age of many CCR surface impoundments, an increase in the release rate might be expected. The cleanup costs avoided under the two co-proposed rules were again calculated as described above and included in the

[164] Recent EPA research demonstrates that CCRs can leach significantly more aggressively under different pH conditions potentially present in disposal units. In U.S. EPA (2009c), a recent ORD study of 34 facilities, CCRs from 19 facilities exceeded at least one of the Toxicity Characteristic regulatory values for at least one type of CCR (*e.g.*, fly ash or FGD residue) at the self-generated pH of the material. This behavior likely explains the rapid migration of constituents from disposal sites like Chesapeake, VA and Gambrills, MD. *See also* U.S. EPA (2006, 2008b).

RIA, given this alternative higher occurrence rate. To summarize the results of this sensitivity analysis, at a 7% discount rate the estimated net present value of avoided releases under the subtitle C requirements total $5,154 million on average (with the upper-bound estimates reaching from $7,356 to $9,423 million for the 90th and 99th percentiles). And under the subtitle D requirements and same discount rate of 7%, the estimated net present value of avoided releases total $2,319 million on average (with the upper-bound estimates reaching from $3,310 to $4,240 million for the 90th and 99th percentiles).

Finally, a further sensitivity analysis was also performed to determine the extent to which these benefits would change if the catastrophic failures occurred sooner than projected by the Poisson distribution. Here, 96 impoundments were identified that were at least 40 feet tall and at least 25 years old. For the purposes of the assessment, benefit estimates were calculated based on assumed impoundment failure rates of both 10% and 20%. The RIA includes net present value estimates of the avoided cleanup costs under the two co-proposed rules for these two assumed failure rates, which are calculated using both 3% and 7% discount rates. Given the potential earlier releases, the analyses in the RIA find that at a 7% discount rate and a 10% failure rate, the net present value of avoided catastrophic failure costs is $8,366 under subtitle C, versus $3,795 million under subtitle D. Furthermore, when assuming a failure rate of 20% rather than 10%, the estimated net present value of avoided catastrophic failure costs increases to $16,732 million under Subtitle C, versus $7,590 million under subtitle D.

Beneficial Use Impacts

The last category of such impacts assessed within the RIA includes the potential effects that the different regulatory options for disposal of coal combustion residuals (CCRs) may have upon the quantities of CCRs that are being beneficially used. In the RIA, EPA estimates the expected increase in beneficial use associated with the increased costs of disposing CCRs, and also evaluates potential future changes in the beneficial uses of CCRs as a result of a potential "stigma" effect.

To begin, EPA projected the quantity of CCRs that will be produced in the future, based upon Energy Information Administration's (EIA) estimates of future coal supply and demand. At the same time, EPA also projected the growth in the percent of beneficial use that would take place absent any EPA rule. Combining these, EPA was able to project the total quantities of beneficially used CCRs under the baseline of no federal rule.

However, it is anticipated that the increased CCR disposal costs associated with a federal RCRA subtitle C rule, and the continued application of the Bevill exclusion to CCRs that are beneficially used, would provide significant incentive to electric utilities avoid higher disposal costs by increasing the quantity of CCRs going to beneficial use. Using the cost projections from the RIA for CCR disposal, EPA assumed that there would initially be unit elasticity with respect to cost, but that the elasticity would decrease with increasing market saturation. Based upon these assumptions, EPA projected the increased growth in beneficial use under a subtitle C rule. EPA then took the monetized benefits of current beneficial use, and applied them to our projected increases in beneficial use under the rule.

When monetized, the values of these increases are extremely large, summing to a net present value of $5,560 million in economic benefits at a 7% discount rate. Furthermore, when considering total social benefits (*e.g.,* decreased GHG emissions) the numbers are even greater, resulting in $84,489 million at a 7% discount rate. (Please note that because the total social benefits overlap with the economic benefits, these numbers should not be added together.) This number represents EPA's lower-bound estimate of the potential increase that it anticipates will occur.

On the basis of past experience, EPA believes it is realistic to expect that there is a possibility that recycling rates will increase under a subtitle C rule, increasing the beneficial use of CCRs. However, stakeholders have raised the potential issue of "stigma." Thus, the RIA also assesses this potential stigma effect and develops estimates of its potential impacts. Here, assumptions were made about what losses or reductions might result among the various sectors involved in the beneficial use of CCRs. For example, federally purchased concrete was assumed to stay at baseline levels because of the positive influence of comprehensive procurement guidelines that are already in place to encourage such types of beneficial uses. Conversely, for the purposes of assessing potential stigma effects, the levels of non-federally purchased concrete were assumed to decrease relative to the baseline.

When monetized, the values of these decreases are also large, summing to a net present value of $18,744 million in economic costs at a 7% discount rate. Furthermore, when considering total social benefits (*e.g.,* GHG emissions) the numbers are even greater, resulting in $233,549 million in economic costs at a 7% discount rate. This number represents EPA's estimate of the potential worst-case decrease that could occur in the event of potential stigma effect.

Since the potential increases in beneficial use as discussed above are driven largely by increases in disposal costs under the subtitle C option, EPA further estimated the effects that would result under a subtitle D rule by applying a ratio of the rule's respective costs under both the C and D options. Using the ratio of the subtitle D costs to the subtitle C costs (a ratio of 0.40:1); the net present value of social benefits associated with increased beneficial use under subtitle D would be approximately $33,796 million (at an assumed discount rate of 7%). It is important to note further that under the subtitle D option for the proposed rule, no such stigma effect would exist and is, therefore, not accounted for in our analyses. However, to the extent that a stigma effect is real, it could just as easily decrease beneficial use under a subtitle D option.

2. Environmental and Public Health Impacts Not Estimated in the RIA

Impacts on Plants and Wildlife

The risk assessment estimated significant risk of adverse effects to plants and wildlife, which is confirmed by the many impacts seen in the existing damage cases and field studies published in the peer-reviewed scientific literature. These include: elevated selenium levels in migratory birds, wetland vegetative damage, fish kills, amphibian deformities, snake metabolic effects, plant toxicity, elevated contaminant levels in mammals as a result of environmental uptake, fish deformities, and inhibited fish reproductive capacity. Requirements in the proposed rule should prevent or reduce these impacts in the future by limiting the extent of environmental contamination and thereby reducing the levels directly available.

Impacts on Surface Water Not Captured in the RIA

In EPA's risk assessment, recreational fishers could be exposed to constituents via the groundwater to surface water pathway. Furthermore, State Pollutant Discharge Elimination System (SPDES) and National Pollutant Discharge

Elimination System (NPDES) discharges from wet handling likely exceed the discharges from groundwater to surface water. Thus, exposure to arsenic via fish consumption could be significant. However, EPA expects that most facilities will eventually switch to dry handling of CCRs, a trend which is discussed in the RIA. This will reduce potential exposures to these constituents from affected fish.

Impacts on Ambient Air

Another impact on public health not discussed in the RIA is the potential reduction of excess cancer cases associated with hexavalent chromium inhaled from the air. Since over six million individuals are estimated to live within the Census population data "zip code tabulation areas" for the plant location zip codes of coal-fired power plants affected by this proposed rule,[165] the potential population health effects may be quite large. Inhalation of hexavalent chromium has been shown to cause lung cancer.[166] By requiring fugitive dust controls, the proposed rule would reduce inhalation exposure to hexavalent chromium near waste management units that are not currently required to control fugitive dust.

Non-Cancer Health Effects Associated With CCR Particulate Matter

There are several non-cancer health effects associated with CCRs are a result of particulate matter inhalation due to dry handling. Human health effects for which EPA is evaluating causality due to particulate matter exposure include cardiovascular morbidity, respiratory morbidity, and mortality, reproductive and developmental effects, and cancer.[167] The potential for and extent of adverse health effects due to fugitive dusts from dry handling of CCRs was demonstrated in U.S. EPA 2010b, "Inhalation of Fugitive Dust: A Screening Assessment of the Risks Posed by Coal Combustion Waste Landfills—DRAFT." The proposed rule's fugitive dust controls would serve to manage such potential risks by bringing them to acceptable levels.

Particles can also be carried over long distances by wind and then settle on ground or water. The effects of this settling include: changing the pH of lakes and streams; changing the nutrient balance in coastal waters and large river basins; depleting nutrients in soil; damaging sensitive forests and farm crops; and affecting the diversity of ecosystems.[168] Additionally, fine particulates are known to contribute to haze.[169] Thus, the fugitive dust controls contained in the proposed rule would improve visibility, and reduce the environmental impacts discussed above.

XIII. Other Alternatives EPA Considered

In determining the level of regulation appropriate for the management of CCRs, taking into account both the need for regulations to protect human health and the environment and the practical difficulties associated with implementation of such regulations, the Agency considered a number of approaches in addition to regulating CCRs under subtitle C or subtitle D of RCRA. Specifically, the Agency also considered several combination approaches, such as regulating surface impoundments under subtitle C of RCRA, while regulating landfills under subtitle D of RCRA.

Under all of the approaches EPA considered, CCRs that were beneficially used would retain the Bevill exemption. In addition, under all the approaches, requirements for liners and ground water monitoring would be established, as well as annual inspections of all CCR surface impoundments by an independent registered professional engineer to ensure that the design, operation, and maintenance of surface impoundments are in accordance with recognized and generally accepted good engineering standards. However, the degree and extent of EPA's authority to promulgate certain requirements, such as permitting, financial assurance, facility-wide corrective action, varies under RCRA subtitle C versus subtitle D. In addition, the degree and extent of federal oversight, including enforcement, varies based on whether a regulation is promulgated under RCRA subtitle C or subtitle D authority. (*See* Section IV. for a more detailed discussion on the differences in EPA's authorities under RCRA subtitle C and subtitle D.)

Under one such approach, wet-handled CCRs—that is, those CCRs managed in surface impoundments or similar management units—would be regulated as a hazardous or special waste under RCRA subtitle C, while dry handled CCRs—that is, those CCRs managed in landfills—would be regulated under RCRA subtitle D. Wet-handled CCR wastes would be regulated under the co-proposed subtitle C alternative described earlier in the preamble (*see* section VI), while dry-handled CCRs would be regulated under the co-proposed RCRA subtitle D alternative described earlier in the preamble (*see* section IX). In addition, EPA would retain the existing Bevill exemption for CCRs that are beneficially used. Under this approach, EPA would establish modified requirements for wet-handled CCRs, pursuant to RCRA 3004(x), as laid out in the co-proposed subtitle C alternative.

This approach would have many of the benefits of both of today's co-proposed regulations. For example, this approach provides a high degree of federal oversight, including permit requirements and federally enforceable requirements, for surface impoundments and similar units that manage wet CCRs. Based on the results of our ground water risk assessment, it would also provide a higher level of protection for those wastes whose method of management presents the greatest risks (*i.e.,* surface impoundments). On the other hand, dry CCRs managed in landfills, while still presenting a risk if the CCRs are not properly managed, clearly present a lower risk, according to the risk assessment and, therefore, a subtitle D approach might be more appropriate. Also, landfills that manage CCRs are unlikely to present a risk of catastrophic failure, such as that posed by surface impoundments that contain large volumes of wet-handled CCRs. EPA also believes this approach could address the concerns of many commenters who expressed their views that subtitle C regulations would overwhelm off-site disposal capacity and would place a stigma on beneficial uses of CCRs.

Of course, this approach also shares the disadvantages of the subtitle C approach, as it applies to surface impoundments, and of the subtitle D approach, as it applies to landfills. For example, portions of the rules applicable to surface impoundments would not become enforceable until authorized states adopt the subtitle C regulations and become authorized; and rules applicable to landfills would not be directly federally enforceable. For a full discussion of the advantages and disadvantages of the subtitle C and subtitle D options *see* sections VI and IX.

Under another approach considered by EPA, the Agency would issue the proposed subtitle C regulations, but they would not go into effect for some time

[165] U.S. EPA. Regulatory Impact Analysis for EPA's Proposed Regulation of Coal Combustion Wastes Generated by the Electric Utility Industry, 2009. Office of Resource Conservation and Recovery.

[166] ATSDR Texas. *Available at: http://www.atsdr.cdc.gov/toxfaq.html.*

[167] Integrated Science Assessment for Particulate Matter: First External Review Draft. EPA/600/R–08/139. Research Triangle Park, NC: U.S. Environmental Protection Agency, Office of Research and Development. 2008.

[168] *http://www.epa.gov/particles/health.html.*

[169] *Ibid.*

period, such as three years, as an example, after promulgation. The rule would include a condition that would exclude CCRs from regulation under subtitle C of RCRA in states that: (l) Had developed final enforceable subtitle D regulations that are protective of human health and the environment,[170] (2) had submitted those regulations to EPA for review within two years after the promulgation date of EPA's subtitle C rule, and (3) EPA had approved within one year, through a process allowing for notice and comment, possibly comparable to the current MSW subtitle D approval process. If a state failed to develop such a program within the two year timeframe for state adoption of the regulations or if EPA did not approve a state program within the one-year timeframe for state approval, the hazardous waste or special waste listing would become effective. Under this alternative, each state would be evaluated individually, which could lead to a situation where CCRs were managed as hazardous or special wastes in certain states, while in other states, they would be managed as non-hazardous wastes. Such an approach could present some implementation issues, particularly if CCRs were transported across state lines. In addition, EPA has serious questions as to whether RCRA, as currently drafted, would allow EPA to promulgate such a regulation. However, EPA solicits comments on this option, both generally and with respect to the specific time frames.

Commenters also have suggested an approach similar to that proposed for cement kiln dust (CKD) in an August 20, 1999 proposed rule (*see* 64 FR 45632 *available at http://www.epa.gov/fedrgstr/EPA–WASTE/1999/August/Day-20/f20546.htm*). Under the CKD approach, the Agency would establish detailed management standards under subtitle D of RCRA. CCRs managed in accordance with the standards would not be a hazardous or special waste. However, CCRs that were in egregious violation of these requirements, such as disposal in land-based disposal units that were not monitored for groundwater releases or in new units built without liners, would be considered listed hazardous or special waste and subject to the tailored subtitle C requirements. (EPA is soliciting comment on this approach because commenters have suggested it; interested commenters may wish to consult the CKD proposal for more detail on how it would work. *See* 64 FR 45632 *available at http://www.epa.gov/epawaste/nonhaz/industrial/special/ckd/ckd/ckd-fr.pdf*). Like the previous approach, EPA is evaluating (and in fact is re-evaluating) this approach, and whether RCRA provides EPA the authority to promulgate such a rule.

Other commenters suggested yet another approach whereby EPA would regulate CCRs going for disposal under RCRA subtitle C, but they assert that EPA would not have to specifically list CCR as a hazardous waste using the criteria established in 40 CFR 261.11. These commenters believe that RCRA § 3001(b)(3)(A) (the so-called Bevill Amendment) authorizes the Agency to regulate CCRs under subtitle C as long as the Agency determines that subtitle C regulation is warranted based on the consideration of the eight factors identified in RCRA § 8002(n). The commenters analysis of their approach is set forth in a memorandum submitted to the Agency and is in the docket for today's notice. EPA has not adopted the commenters suggested reading of the statute, but solicits comments on it. (*See* "EPA Has Clear Authority to Regulate CCW under RCRA's Subtitle C without Making a Formal Listing Determination," White Paper from Eric Schaeffer, Environmental Integrity Project which is available in the docket for this proposal.)

Finally, some commenters have suggested that EPA not promulgate any standards, whether it be RCRA subtitle C or D, but continue to rely on the states to regulate CCRs under their existing or new state authority, and that EPA could rely on RCRA section 7003 (imminent and substantial endangerment) authority, to the extent the Agency had information that a problem existed that it needed to address. The Agency does not believe that such an approach is at all acceptable, and that national regulations whether it be under RCRA subtitle C or D needs to be promulgated. First, RCRA was designed as a preventative statute and not one where EPA would get involved only after a problem has been discovered. Thus, such an approach would not be consistent with the purpose and objectives of RCRA. In addition, this approach would basically implement the status quo—that is, the control of CCRs over the last decade, which the Agency believes has not shown to be at all acceptable. Furthermore, imminent and substantial endangerment authority is facility-specific and resource intensive. That is, such authority can only be used when EPA has sufficient information to determine that disposal of CCRs are contributing to an imminent and substantial endangerment. Thus, relying on this authority, without national regulations, is poorly suited to address the many problems that have occurred, and are likely to occur in the future. Nevertheless, the Agency solicits comment on such an approach.

EPA solicits comments on all of the approaches discussed above. The Agency is still considering all of these approaches, as well as our legal authorities to promulgate them, and will continue to do so as we move toward finalizing the regulations applicable to the disposal of CCRs.

XIV. Is the EPA soliciting comments on specific issues?

Throughout today's preamble, the Agency has identified many issues for which it is soliciting comment along with supporting information and data. In order to assist readers in providing EPA comments and supporting information, in this section EPA is identifying many of the major issues on which comments with supporting information and data are requested.

Management of CCRs

- Whether regulatory approaches should be established individually for the four Bevill CCR wastes (fly ash, bottom ash, boiler slag, and FGD sludges) when destined for disposal.
- The extent to which the information currently available to EPA reflects current industry practices at both older and new units.
- The regulatory approaches proposed in the notice and the alternative approaches EPA is considering as discussed in Section XIII of the preamble.
- The Agency has documented, through proven damage cases and risk analyses, that the wet handling of CCRs in surface impoundments poses higher risks to human health and the environment than the dry handling of CCRs in landfills. EPA seeks comments on the standards proposed in this notice to protect human health and the environment from the wet handling of CCRs. For example, in light of the TVA Kingston, Tennessee, and the Martins Creek, Pennsylvania CCR impoundment failures, should the Agency require that owners or operators of existing and new CCR surface impoundments submit emergency response plans to the regulatory authority if wet handling of CCRs is practiced?
- The degree to which coal refuse management practices have changed and the impacts of those changes or, for

[170] Under this approach, EPA also would establish minimum national standards that ensure that CCRs that are managed under the "D" regulations would be protective of human health and the environment.

example, groundwater monitoring and the use of liners.

• Information and data on CCRs that are generated by non-utility industries, such as volumes generated, characteristics of the CCRs, and whether they are co-managed with other wastes generated by the non-utility industry.

Risk Assessment

• Are there any additional data that are representative of CCR constituents in surface impoundment or landfill leachate (from literature, state files, industry or other sources) that EPA has not identified and should be used in evaluating the risks presented by the land disposal of CCRs?

• The screening analysis conducted to estimate risks from fugitive CCR dust; data from any ambient air monitoring for particulate matter that has been conducted; where air monitoring stations are located near CCR landfills or surface impoundments; and information on any techniques, such as wetting, compaction, or daily cover that are or can be employed to reduce such exposures.

• Whether site-averaged porewater data used in model runs in EPA's risk analyses are representative of leachate from surface impoundments.

• Information and data regarding the existence of drinking water wells that are down-gradient of CCR disposal units, any monitoring data that exists on those monitoring wells and the potential of these wells to be intercepted by surface water bodies.

Liners

• Whether, in addition to the flexibility provided by section 3004(o)(2), regulations should also provide for alternative liner designs based on, for example, a specific performance standard, such as the performance standard in 40 CFR 258.40(a)(1), or a site specific risk assessment, or a standard that the alternative liner, such as a clay liner, was at least as effective as the composite liner.

• Whether clay liners designed to meet a 1×10^{-7} cm/sec hydraulic conductivity might perform differently in practice than modeled in the risk assessment, including specific data on the hydraulic conductivity of clay liners associated with CCR disposal units.

• The effectiveness of such additives as organosilanes, including any analyses that would reflect long-term performance of the additives, as well as the appropriateness of a performance standard that would allow the use of these additives in lieu of composite liners.

Beneficial Use

• The growth and maturation of state beneficial use programs and the growing recognition that the beneficial use of CCRs is a critical component in strategies to reduce GHG emissions taking into account the potentially changing composition of CCRs as a result of improved air pollution controls and the new science on metals leaching.

• Information and data on the extent to which states request and evaluate CCR characterization data prior to the beneficial use of unencapsulated CCRs.

• The appropriate means of characterizing beneficial uses that are both protective of human health and the environment and provide benefits. EPA is also requesting information and data demonstrating where the federal and state programs could improve on being environmentally protective and, where states have, or are developing, increasingly effective beneficial use programs.

• Whether certain uses of CCRs (*e.g.,* uses involving unencapsulated uses of CCRs) warrant tighter control and why such tighter control is necessary.

• If EPA determines that regulations are needed for the beneficial use of CCRs, should EPA consider removing the Bevill exemption for such uses and regulate these uses under RCRA subtitle C, develop regulations under RCRA subtitle D or some other statutory authority, such as under the Toxic Substances Control Act?

• Whether it is necessary to define beneficial use better or develop detailed guidance on the beneficial use of CCRs to ensure protection of human health and the environment, including whether certain unencapsulated beneficial uses should be prohibited.

• Whether the Agency should promulgate standards allowing uses on the land, on a site-specific basis, based on site specific risk assessments, taking into consideration the composition of CCRs, their leaching potential under the range of conditions under which the CCRs would be managed, and the context in which CCRs would be applied, such as location, volume, rate of application, and proximity to water.

• If materials characterization is required, what type of characterization is most appropriate? If the CCRs exceed the toxicity characteristic at pH levels different from the TCLP, should they be excluded from beneficial use? When are totals levels relevant?

• Whether EPA should fully develop a leaching assessment tool in combination with the Draft SW–846 leaching test methods described in Section I. F. 2 and other tools (*e.g.,* USEPA's *Industrial Waste Management Evaluation Model* (IWEM)) to aid prospective beneficial users in calculating potential release rates over a specified period of time for a range of management scenarios.

• Information and data relating to the agricultural use of FGD gypsum, including the submission of historical data, taking into account the impact of pH on leaching potential of metals, the variable and changing nature of CCRs, and variable site conditions.

• Historically, EPA has proposed or imposed conditions on other types of hazardous wastes used in a manner constituting disposal (*e.g.,* maximum application rates and risk-based concentration limits for cement kiln dust used as a liming agent in agricultural applications (*see* 64 FR 45639; August 20, 1999); maximum allowable total concentrations for non-nutritive and toxic metals in zinc fertilizers produced from recycled hazardous secondary materials (*see* 67 FR 48393; July 24, 2002). Should EPA establish standards, such as maximum/minimum thresholds, or rely on implementing states to impose CCR site-specific limits based on front-end characterization that ensures individual beneficial uses remain protective?

• Whether additional beneficial uses of CCRs have been established, since the May 2000 Regulatory Determination, that have not been discussed elsewhere in today's preamble. The Agency solicits comment on any new uses of CCR, as well as the information and data which support that CCRs are beneficially used in an environmentally sound manner.

• Whether there are incentives that could be provided that would increase the amount of CCRs that are beneficially used and comment on specific incentives that EPA could adopt that would further encourage the beneficial use of CCRs.

• Information and data on the best means for estimating current and future quantities and changes in the beneficial use of CCRs, as well as on the price elasticity of CCR applications in the beneficial use market.

Stigma

• If EPA were to regulate CCRs as a "special waste" under subtitle C of RCRA, and stigma turns out to be an issue, suggestions on methods by which the Agency could reduce any stigmatic impact that might indirectly arise. We are seeking information on actual instances where "stigma" has adversely affected the beneficial use of CCRs and the causes of these adverse effects.

• The issue of "stigma" and its impact on beneficial uses of CCRs, including

more specifics on the potential for procedural difficulties for state programs, and measures that EPA might adopt to try to mitigate these effects.

• For those commenters who argue that regulating CCRs under subtitle C of RCRA would raise liability issues, EPA requests that commenters describe the types of liability and the basis/data/information on which these claims are based.

• EPA furthermore welcomes ideas on how to best estimate these effects for purposes of conducting regulatory impact analysis, and requests any data or methods that would assist in this effort.

Today's Co-Proposed Regulations

General

• Some commenters have suggested that EPA not promulgate any standards, whether they be RCRA subtitle C or D, but continue to rely on the states to regulate CCRs under their existing or new state authorities. The Agency solicits comment on such an approach, including how such an approach would be protective of human health and the environment.

RCRA Subtitle C Regulations

• Whether EPA should modify the corrective action requirements for facility-wide corrective action under the subtitle C co-proposal under the authority of section 3004(x) of RCRA. If so, how such modification would be protective of human health and the environment.

• Pursuant to RCRA section 3010 and 40 CFR 270.1(b), facilities managing these special wastes subject to RCRA subtitle C must notify EPA of their waste management activities within 90 days after the wastes are identified or listed as a special waste. The Agency is proposing to waive this notification requirement for persons who handle CCRs and have already: (1) notified EPA that they manage hazardous wastes, and (2) received an EPA identification number. Should such persons be required to re-notify the Agency that they generate, transport, treat, store or dispose of CCRs?

• Representatives of the utility industry have stated their view that CCRs cannot be practically or cost effectively managed under the existing RCRA subtitle C storage standards, and that these standards impose significant costs without meaningful benefits when applied specifically to CCRs. Comments are solicited on the practicality of the proposed subtitle C storage requirements for CCRs, the workability of the existing variance process allowing alternatives to secondary containment, and the alternative requirements based, for example, on the mining and mineral processing waste storage requirements.

RCRA Subtitle D Regulations

• EPA broadly solicits comment on the approach of relying on certifications by independent registered professional hydrologists or engineers of the adequacy of actions taken at coal-fired utilities to design and operate safe waste management systems.

• The Agency does not have specific data showing the number of CCR landfills located in fault areas where movement along Holocene faults is common, and the distance between these units and the active faults and, thus, is unable to precisely estimate the number of these existing CCR landfills that would not meet today's proposed fault area restrictions. Additional information regarding the extent to which existing landfills are currently located in such locations is solicited.

• In general, EPA believes that a 200-foot buffer zone is necessary to protect engineered structures from seismic damages and also expects that the 200-foot buffer is appropriate for CCR surface impoundments. The Agency seeks comment and data on whether the buffer zone should be greater for surface impoundments.

• Additional information regarding the extent to which landfill capacity would be affected by applying the proposed subtitle D location restrictions to existing CCR landfills.

• The proposed location requirements do not reflect a complete prohibition on siting facilities in areas of concern, but provide a performance standard that facilities must meet in order to site a unit in such a location. Information on the extent to which facilities could comply with the proposed performance standards, and the necessary costs that would be incurred to retrofit CCR disposal units to meet these standards is solicited.

• The proposed definition of seismic impact zones and whether there are variants that could lessen the burden on the industry and the geographic areas covered by the proposed definition.

• Whether the subtitle D option, if promulgated, should allow facilities to use alternative designs for new disposal units, so long as the owner or operator of a unit could obtain certification from an independent registered professional engineer or hydrologist that the alternative design would ensure that the appropriate concentration values for a set of constituents typical of CCRs will not be exceeded in the uppermost aquifer at the relevant point of compliance (*i.e.,* 150 meters from the unit boundary down gradient from the unit, or the property boundary if the point of compliance is beyond the property boundary).

• Whether there could be homeland security implications with the requirement to post information on an internet site and whether posting certain information on the internet may duplicate information that is already available to the public through the State.

• Whether the subtitle "D prime" option is protective of human health and the environment.

• EPA is proposing that existing CCR landfills and surface impoundments that cannot make a showing that a CCR landfill or surface impoundment can be operated safely in a floodplain or unstable area must close within five years after the effective date of the rule. EPA solicits comment on the appropriate amount of time necessary to meet this requirement, as well as measures that could help to address the potential for inadequate disposal capacity.

• The effectiveness of annual surface impoundment assessments in ensuring the structural integrity of CCR surface impoundments over the long term.

Surface Impoundment Closeout

• Whether the Agency should provide for a variance process allowing some surface impoundments that manage wet-handled CCRs to remain in operation because they present minimal risk to groundwater (*e.g.,* because they have a composite liner) and minimal risk of a catastrophic release (*e.g.,* as indicated by a low or less than low potential hazard rating under the Federal Guidelines for Dam Safety established by the Federal Emergency Management Agency).

Surface Impoundment Stability

• The adequacy of EPA's proposals to address surface impoundment integrity under RCRA.

• Whether to address all CCR impoundments for stability, regardless of height and storage volume; whether to use the cut-offs in the MSHA regulations; or whether other regulations, approaches, or size cut-offs should be used. If commenters believe that other regulations or different size cut-offs should be adopted, we request that commenters provide the basis and technical support for their position.

• Whether surface impoundment integrity should be addressed under EPA's NPDES permit program, rather than the development of regulations under RCRA, whether it be RCRA subtitles C or D.

Financial Assurance

- EPA broadly solicits comments on whether financial assurance should be a key program element under a subtitle D approach, if the decision is made to promulgate regulations under RCRA subtitle D.
- Whether financial responsibility requirements under CERCLA § 108(b) should be a key Agency focus for ensuring that funds are available for addressing the mismanagement of CCRs.
- How the financial assurance requirements might apply to surface impoundments that cease receiving CCRs before the effective date of the rule.
- Whether a financial test similar to that in 40 CFR 258.74(f) in the Criteria for Municipal Solid Waste Landfills should be established for local governments that own and operate coal-fired power plants.

State Programs

- Detailed information on current and past individual state regulatory and non-regulatory approaches taken to ensure the safe management of CCRs, not only under State waste authorities, but under other authorities as well, including the implementation of those approaches.
- The potential of federal regulations to cause disruption to States' implementation of CCR regulatory programs under their own authorities, including more specifics on the potential for procedural difficulties for State programs, and measures that EPA might adopt to try to mitigate these effects.

Damage Cases

- EPRI's report and additional data regarding the proven damage cases identified by EPA, especially the degree to which there was off-site contamination.
- The report of additional damage cases submitted to EPA on February 24, 2010 by the Environmental Integrity Project and EarthJustice.

Regulatory Impact Analysis

- Data and findings presented in the RIA, as well as on the cost and benefit estimation uncertainty factors identified in the RIA.
- Data on the costs of converting coal fired power plants from wet handling to dry handling with respect to the various air pollution controls, transportation systems, disposal units, and other heterogeneous factors.
- Relevant RCRA corrective actions and related costs that would be useful in characterizing the potential costs for future actions.
- Information on other significant and catastrophic surface impoundment releases of CCRs or other similar materials and cleanup costs associated with these releases?
- Data on the costs of storage of CCRs in tanks or tank systems, on pads, or in buildings.
- EPA has also quantified and monetized the benefits of this rule to the extent possible based on available data and modeling tools, but welcomes additional data that may be available that would assist the Agency in expanding and refining our existing benefit estimates.

XV. Executive Orders and Laws Addressed in This Action

A. Executive Order 12866: Regulatory Planning and Review

Under section 3(f)(1) of Executive Order (EO) 12866 (58 FR 51735, October 4, 1993), this action is an "economically significant regulatory action" because it is likely to have an annual effect on the economy of $100 million or more (section 3(f)(1)). This determination is based on the regulatory cost estimates provided in EPA's "Regulatory Impact Analysis" (RIA) which is available in the docket for this proposal. The RIA estimated regulatory implementation and compliance costs, benefits and net benefits for a number of regulatory options, including a subtitle C "special waste" option, a subtitle D option and, a subtitle "D prime" option. The subtitle D prime option was briefly described in the Preamble and is more fully discussed in the RIA to the co-proposal. On an average annualized basis, the estimated regulatory compliance costs for the three options in today's proposed action are $1,474 million (subtitle C special waste), $587 million (subtitle D), and $236 million (subtitle "D prime") per year. On an average annualized basis, the estimated regulatory benefits for the three options in today's proposed action are $6,320 to $7,405 million (subtitle C special waste), $2,533 to $3,026 million (subtitle D), and $1,023 to $1,268 million (subtitle "D prime") per year. On an average annualized basis, the estimated regulatory net benefits for the three options in today's proposed action are $4,845 to $5,930 million (subtitle C special waste), $1,947 to $2,439 million (subtitle D), and $786 to $1,032 million (subtitle "D prime") per year. All options exceed $100 million in expected future annual effect. Accordingly, EPA submitted this action to the Office of Management and Budget (OMB) for review under EO 12866, and changes made in response to OMB recommendations are documented in the docket for this proposal.

B. Paperwork Reduction Act

The information collection requirements contained in this proposed rule has been submitted for approval to the Office of Management and Budget (OMB) under the *Paperwork Reduction Act,* 44 U.S.C. 3501 *et seq.* The Information Collection Request (ICR) document prepared by EPA has been assigned EPA ICR number 1189.22.

Today's action co-proposes two regulatory alternatives that would regulate the disposal of CCRs under RCRA. The regulatory options described in today's notice contain mandatory information collection requirements. One of the regulatory options (subtitle C special waste option) would also trigger mandatory emergency notification requirements for releases of hazardous substances to the environment under CERCLA and EPCRA. The labor hour burden and associated cost for these requirements are estimated in the ICR "Supporting Statement" for today's proposed action. The Supporting Statement identifies and estimates the burden for the following nine categories of information collection: (the proposed options also contain other regulatory requirements not listed here because they do not involve information collection).

1. Groundwater monitoring
2. Post-closure groundwater monitoring
3. RCRA manifest cost (for subtitle C only)
4. Added cost of RCRA subtitle C permits for all offsite CCR landfills
5. Structural integrity inspections
6. RCRA facility-wide investigation (for subtitle C only)
7. RCRA TSDF hazardous waste disposal permit (for subtitle C only)
8. RCRA enforcement inspection (for subtitle C only)
9. Recordkeeping requirements

Based on the same data and cost calculations applied in the "Regulatory Impact Analysis" (RIA) for today's action, but using the burden estimation methods for ICRs, the ICR "Supporting Statement" estimates an average annual labor hour burden of 2.88 million hours for the subtitle C "special waste" option and 1.38 million hours for both the subtitle D and "D prime" options at an average annual cost of $192.93 million for the subtitle C "special waste" option and $92.6 million for both the subtitle D options. One-time capital and hourly costs are included in these estimates based on a three-year annualization period. The estimated number of likely respondents (under the options) ranges

from 90 to 495, depending on the information category enumerated above. Burden is defined at 5 CFR 1320.3(b). An Agency may not conduct or sponsor, and a person is not required to respond to, a collection of information unless it displays a currently valid OMB control number. The OMB control numbers for EPA's regulations in 40 CFR are listed in 40 CFR part 9.

To comment on the Agency's need for this information, the accuracy of the provided burden estimates, and any suggested methods for minimizing respondent burden, EPA has established a public docket for this rule, which includes this ICR, under Docket ID number EPA–HQ–RCRA–2009–0640. Submit any comments related to the ICR to EPA and OMB. *See* **ADDRESSES** section at the beginning of this notice for where to submit comments to EPA. Send comments to OMB at the Office of Information and Regulatory Affairs, Office of Management and Budget, 725 17th Street, NW., Washington, DC 20503, Attention: Desk Office for EPA. Since OMB is required to make a decision concerning the ICR between 30 and 60 days after June 21, 2010, a comment to OMB is best assured of having its full effect if OMB receives it by July 21, 2010. The final rule will respond to any OMB or public comments on the information collection requirements contained in this proposal.

C. Regulatory Flexibility Act

The Regulatory Flexibility Act (RFA) generally requires an Agency to prepare a regulatory flexibility analysis of any rule subject to notice and comment rulemaking requirements under the Administrative Procedure Act or any other statute unless the Agency certifies that the rule will not have a significant economic impact on a substantial number of small entities. Small entities include small businesses, small organizations, and small governmental jurisdictions.

For purposes of assessing the impacts of today's rule on small entities in the electric utility industry, small entity is defined as: (1) A small fossil fuel electric utility plant as defined by NAICS code 221112 with a threshold of less than four million megawatt-hours of electricity output generated per year (based on Small Business Administration size standards); (2) a small governmental jurisdiction that is a government based on municipalities with a population of less than 50,000; and (3) a small organization that is any not-for-profit enterprise which is independently owned and operated and is not dominant in its field.

EPA certifies that this action will not have a significant economic impact on a substantial number of small entities (*i.e.,* no SISNOSE). EPA nonetheless continues to be interested in the potential impacts of the proposed rule on small entities and welcomes comments on issues related to such impacts, including our estimated count of small entities that own the 495 electric utility plants covered by this rule. This certification is based on the small business analysis contained in the RIA for today's proposal, which contains the following findings and estimates.

- The RIA identifies 495 electric utility plants likely affected by the proposed rule, based on 2007 data. The RIA estimates these 495 plants are owned by 200 entities consisting of 121 companies, 18 cooperative organizations, 60 state or local governmental jurisdictions, and one Federal government Agency. The RIA estimates that 51 of these 200 owner entities (*i.e.,* 26%) may be classified as small entities, consisting of 33 small municipal governments, 11 small companies, 6 small cooperatives, plus 1 small county government.
- The RIA includes a set of higher cost estimates for the regulatory options and the RFA evaluation is based on these estimates and therefore overestimates potential impacts of our proposed regulations. The RIA estimated that (a) None of the 51 small entities may experience average annualized regulatory compliance costs of greater than three percent of annual revenues, (b) one to five of the 51 small entities (*i.e.,* 2% to 10%) may experience regulatory costs greater than one percent of annual revenues, and (c) 46 to 50 of the small entities (*i.e.,* 90% to 98%) may experience regulatory costs less than one percent of annual revenues. These percentages constitute the basis for today's no-SISNOSE certification.

As analyzed in the RIA, there are two electricity market factors which may be expected to reduce or eliminate these potential revenue impacts on small entities, as well as for the other owner entities for the 495 plants:

- Electric utility plants have a mechanism to cover operating cost increases via rate hike petitions to public utility commissions in states which regulate public utilities, and via market price increases in the 18 states (as of 2008) which have de-regulated electric utilities, and
- The residential, commercial, industrial, and transportation sector economic demand for (*i.e.,* consumption of) electricity is relatively price inelastic, which suggests that electric utility plants may succeed in passing through most or all regulatory costs to their electricity customers.

However, because the Agency is sensitive to any potential impacts its regulations may have on small entities, the Agency requests comment on its analysis, and its finding that this action is not expected to have a significant economic impact on a substantial number of small entities.

D. Unfunded Mandates Reform Act

Title II of the Unfunded Mandates Reform Act of 1995 (UMRA), 2 U.S.C. 1531–1538, requires Federal agencies, unless otherwise prohibited by law, to assess the effects of their regulatory actions on State, local, and tribal governments and the private sector. This co-proposal contains a Federal mandate that may result in expenditures of $100 million or more for State, local, and tribal governments, in the aggregate, or for the private sector, in any one year.

The RIA includes a set of higher cost estimates for the regulatory options and the UMRA evaluation is based on these estimates and therefore overestimates the potential impacts of this co-proposal. Accordingly, EPA has prepared under section 202 of the UMRA a "Written Statement" (an appendix to the RIA) which is summarized below. Today's co-proposal will likely affect 495 electric utility plants owned by an estimated 200 entities, of which 139 private sector electric utility companies and cooperatives may incur between $415 million to $1,999 million in future annual direct costs across the high-end options in the RIA, which exceed the $100 million UMRA direct cost threshold under each of the regulatory options. In addition, 60 entities are state or local governments which may incur between $56 million to $97 million in future annual direct costs across the regulatory options, the upper-end of which is slightly under the $100 million UMRA direct cost threshold. The remainder single entity is a Federal government Agency (*i.e.,* Tennessee Valley Authority).

Although the estimated annual direct cost on state or local governments is less than the $100 million UMRA threshold, (a) because the highest-cost regulatory option is only 3% less than the $100 million annual direct cost threshold, and (b) because there are a number of uncertainty factors (as identified in the RIA) which could result in regulatory costs being lower or higher than estimated, EPA consulted with small governments according to EPA's UMRA interim small government consultation

plan developed pursuant to section 203 of the UMRA. EPA's interim plan provides for two types of possible small government input: technical input and administrative input. According to this plan, and consistent with section 204 of the UMRA, early in the process for developing today's co-proposal, the Agency implemented a small government consultation process consisting of two consultation components.

• A series of meetings in calendar year 2009 were held with the purpose of acquiring small government technical input, including: (1) A February 27 meeting with ASTSWMO's Coal Ash Workgroup (Washington, DC); (2) a March 22–24 meeting with ECOS at their Spring Meeting (Alexandria VA); (3) a April 15–16 meeting with ASTSWMO at their Mid-Year Meeting (Columbus OH), (4) a May 12–13 meeting at the EPA Region IV State Directors Meeting (Atlanta, GA), (5) a June 17–18 meeting at the ASTSWMO Solid Waste Managers Conference (New Orleans, LA), (6) a July 21–23 meeting at ASTSWMO's Board of Directors Meeting (Seattle, WA), and (7) an August 12 meeting at ASTSWMO's Hazardous Waste Subcommittee Meeting (Washington, DC). ASTSWMO is an organization with a mission to work closely with EPA to ensure that its state government members are aware of the most current developments related to their state waste management programs. ECOS is a national non-profit, non-partisan association of state and territorial environmental Agency leaders. As a result of these meetings, EPA received letters in mid-2009 from 22 state governments, as well as a letter from ASTSWMO expressing their stance on CCR disposal regulatory options.

Letters were mailed on August 24, 2009 to the following 10 organizations representing state and local elected officials, to inform them and seek their input for today's proposed rulemaking, as well as to invite them to a meeting held on September 16, 2009 in Washington, DC: (1) National Governors Association; (2) National Conference of State Legislatures, (3) Council of State Governments, (4) National League of Cities, (5) U.S. Conference of Mayors, (6) County Executives of America, (7) National Association of Counties, (8) International City/County Management Association, (9) National Association of Towns and Townships, and (10) ECOS. These 10 organizations of elected state and local officials are identified in EPA's November 2008 Federalism guidance as the "Big 10" organizations appropriate to contact for purpose of consultation with elected officials. EPA has received written comments from a number of these organizations and a copy of their comments has been placed in the docket for this rulemaking. The commenters express significant concerns with classifying CCRs as a hazardous waste. Their major concerns are that federal regulation could undercut or be duplicative of State regulations; that any federal regulation will have a great impact on already limited State resources; and that such a rule would have a negative effect on beneficial use. A number of commenters also raise the issue of the cost to their facilities of a subtitle C rule, particularly increased disposal costs and the potential shortage of hazardous waste disposal capacity.

Consistent with section 205 of UMRA, EPA identified and considered a reasonable number of regulatory alternatives. Today's proposed rule identifies a number of regulatory options, and EPA's RIA estimates that the average annual direct cost to industry across the three originally considered options (*e.g.* as reflected in the RIA in Exhibit 7L) may range between $415 million to $1,999 million. Section 205 of the UMRA requires Federal agencies to select the least costly or most cost-effective regulatory alternative unless the Agency publishes with the final rule an explanation of why such alternative was not adopted. We are co-proposing two regulatory options in today's notice involving RCRA subtitle C "special waste" and subtitle D. The justification for co-proposing the higher-cost options is that this provides for greater benefits and protection of public health and the environment by phasing out surface impoundments, compared to the lower cost subtitle D prime option.

E. Executive Order 13132: Federalism

Executive Order 13132, entitled "Federalism" (64 FR 43255, August 10, 1999), requires EPA to develop an accountable process to ensure "meaningful and timely input by State and local officials in the development of regulatory policies that have federalism implications." "Policies that have federalism implications" are defined in the Executive Order to include regulations that have "substantial direct effects on the States, on the relationship between the national government and the States, or on the distribution of power and responsibilities among the various levels of government."

Under Executive Order 13132, EPA may not issue a regulation that has federalism implications, that imposes substantial direct compliance costs, and that is not required by statute, unless the Federal government provides the funds necessary to pay the direct compliance costs incurred by State and local governments, or EPA consults with State and local officials early in the process of developing the proposed regulation.

EPA has concluded that this proposed rule may have federalism implications, because it may impose substantial direct compliance costs on State or local governments, and the Federal government may not provide the funds necessary to pay those costs. Accordingly, EPA provides the following federalism summary impact statement as required by section 6(b) of Executive Order 13132.

The RIA includes a set of higher cost estimates for the regulatory options and the Federalism evaluation is based on these estimates and, therefore, overestimates the potential impacts of our proposal.

Based on the estimates in EPA's RIA for today's action, the proposed regulatory options, if promulgated, may have federalism implications because the options may impose between $56 million to $97 million in annual direct compliance costs on 60 state or local governments. These 60 state and local governments consist of 33 small municipal government jurisdictions, 19 non-small municipal government jurisdictions, 7 state government jurisdictions, and one county government jurisdiction. In addition, the 48 state governments with RCRA-authorized programs for the proposed regulatory options may incur between $0.05 million to over $5.4 million in added annual administrative costs involving the 495 electric utility plants for reviewing and enforcing the various requirements. Based on these estimates, the expected annual cost to state and local governments for at least one of the regulatory options described in today's notice exceeds the $25 million per year "substantial compliance cost" threshold defined in section 1.2(A)(1) of EPA's November 2008 "Guidance on Executive Order 13132: Federalism." In developing the regulatory options described in today's notice, EPA consulted with 10 national organizations representing state and local elected officials to ensure meaningful and timely input by state/local governments, consisting of two consultation components, which is described under the UMRA Executive Order discussion.

In the spirit of Executive Order 13132, and consistent with EPA policy to promote communications between EPA and State and local governments, EPA specifically solicits comment on this co-

proposal from elected State and local government officials.

F. Executive Order 13175: Consultation and Coordination With Indian Tribal Governments

Executive Order 13175 (65 FR 67249–67252, November 9, 2000) requires Federal agencies to provide funds to tribes, consult with tribes, and to conduct a tribal summary impact statement, for regulations and other actions which are expected to impose substantial direct compliance costs on one or more Indian tribal governments. Today's co-proposal, whether under subtitle C or subtitle D authority, is likely to impose direct compliance costs on an estimated 495 coal-fired electric utility plants. This estimated plant count is based on operating plants according to the most recent (2007) data available as of mid-2009 from the DOE's Energy Information Administration "Existing Generating Units in the United States by State, Company and Plant 2007." Based on information published by the Center for Media and Democracy,[171] three of the 495 plants are located on tribal lands, but are not owned by tribal governments: (1) Navajo Generating Station in Coconino County, Arizona owned by the Salt River Project; (2) Bonanza Power Plant in Uintah County, Utah owned by the Deseret Generation and Transmission Cooperative; and (3) Four Corners Power Plant in San Juan County, New Mexico owned by the Arizona Public Service Company. The Navajo Generating Station and the Four Corners Power Plant are on lands belonging to the Navajo Nation, while the Bonanza Power Plant is located on the Uintah and Ouray Reservation of the Ute Indian Tribe. According to this same information source, there is one additional coal-fired electric utility plant planned for construction on Navajo Nation tribal land near Farmington, New Mexico, but to be owned by a non-tribal entity (the Desert Rock Energy Facility to be owned by the Desert Rock Energy Company, a Sithe Global Power subsidiary). Because none of the 495 plants are owned by tribal governments, this action does not have tribal implications as specified in Executive Order 13175. Thus, Executive Order 13175 does not apply to this action. EPA solicits comment on the accuracy of the information used for this determination. EPA met with a Tribal President, whose Tribe owns a cement plant, and who was concerned about the adverse impact of designating coal combustion residuals as a hazardous waste and the effect that a hazardous waste designation would have on the plant's business. We assured the Tribal President that we are aware of the "stigma" concerns related to a hazardous waste listing and will be analyzing that issue throughout the rulemaking process.

G. Executive Order 13045: Protection of Children From Environmental Health & Safety Risks

Executive Order (EO) 13045 (62 FR 19885, April 23, 1997) establishes federal executive policy on children's health and safety risks. Its main provision directs federal agencies, to the greatest extent practicable and permitted by law, to make it a high priority to identify and assess environmental health risks and safety risks that may disproportionately affect children in the United States. EPA has conducted a risk assessment which includes evaluation of child exposure scenarios, as well as has evaluated Census child population data surrounding the 495 plants affected by today's co-proposal, because today's action meets both of the two criteria for "covered regulatory actions" defined by Section 2–202 of EO 13045: (a) today's co-proposal is expected to be an "economically significant" regulatory action as defined by EO 12866, and (b) based on the risk analysis discussed elsewhere in today's notice, the environmental and safety hazards addressed by this action may have a disproportionate effect on children.

For each covered regulatory action, such as today's action, Section 5 of EO 13045 requires federal agencies (a) to evaluate the environmental health or safety effects of the planned regulation on children, and (b) to explain why the planned regulation is preferable to other potentially effective and reasonably feasible alternatives considered by the Agency. The remainder of this section below addresses both of these requirements, as well as presents a summary of the human health risk assessment findings with respect to child exposure scenarios, and the results of the child demographic data evaluation.

G1. Evaluation of Environmental Health and Safety Effects on Children

EPA conducted a risk evaluation consisting of two steps, focusing on environmental and health effects to adults and to children that may occur due to groundwater contamination. The first step, conducted in 2002, was a screening effort targeting selected hazardous chemical constituents that appeared to be the most likely to pose risks. The second step, conducted between 2003 and 2009, consisted of more detailed "probabilistic" modeling for those constituents identified in the screening as needing further evaluation. Constituents that may cause either cancer or non-cancer effects in humans (*i.e.,* both adults and children) were evaluated under modeling scenarios where they migrate from a CCR landfill or surface impoundment toward a drinking water well or nearby surface water body, and where humans ingest the constituents either by drinking the contaminated groundwater or by eating fish caught in surface water bodies affected by the contaminated groundwater.

As described elsewhere in today's notice, EPA found that for the non-cancer health effects in the groundwater-to-drinking-water pathway and in the fish consumption pathways evaluated in the probabilistic modeling, children rather than adults had the higher exposures. This result stems from the fact that while at a given exposure point (*e.g.,* a drinking water well located a certain distance and direction down-gradient from the landfill or surface impoundment), the modeled groundwater concentration is the same regardless of whether the receptor is an adult or a child. Thus the other variables in the exposure equations (that relate drinking water intakes or fish consumption rates and body weight to a daily "dose" of the constituent) mean that, on a per-kilogram-body-weight basis, children are exposed to higher levels of constituents than adults.

G2. Evaluation of Children's Population Census Data Surrounding Affected Electric Utility Plants

The RIA for today's co-proposal contains an evaluation of whether children may disproportionately live near the 495 electric utility plants potentially affected by this rulemaking. This demographic data analysis is supplemental to and separate from the risk assessment summarized above. To make this determination, the RIA compares Census demographic data on child populations residing near each of the 495 affected plants, to statewide children population data. The results of that evaluation are summarized here.

- Of the 495 electric utility plants, 383 of the plants (77%) operate CCR disposal units on-site (*i.e.,* onsite landfills or onsite surface

[171] The Center for Media and Democracy (CMD) was founded in 1993 as an independent, non-profit, non-partisan, public interest organization. Information about electric utility plants located on tribal lands is from CMD's SourceWatch Encyclopedia at: *http://www.sourcewatch.org/index.php?title=Coal_and_Native_American_tribal_lands.*

impoundments), 84 electric utility plants solely transport CCRs to offsite disposal units operated by other companies (*e.g.,* commercial waste management companies), and 28 other electric utility plants generate CCRs that are solely beneficially used rather than disposed. Child demographic data is evaluated in the RIA for all 495 plants because some regulatory options could affect the future CCR management method (*i.e.,* disposal versus beneficial use) for some plants.

- The RIA provides three complementary approaches to comparison of child populations surrounding the 495 plants to statewide child population data: (a) Plant-by-plant comparison basis, (b) state-by-state aggregation comparison basis, and (c) nationwide total comparison basis. There are year 2000 Census data for 464 (94%) of the 495 electric utility plants which the RIA used for these comparisons and extrapolated to all 495 plants. Statewide children population benchmark percentages range from 21.5% (Maine) to 30.9% (Utah), with a nationwide average of 24.7%.
- For purpose of determining the relative degree by which children may exceed these statewide percentages, the percentages are not only compared in absolute terms, but also compared as a numerical ratio whereby a ratio of 1.00 indicates that the child population percentage living near an electric utility plant is equal to the statewide average, a ratio greater than 1.00 indicates the child population percentage near the electric utility plant is higher than the statewide population, and a ratio less than 1.00 indicates the child population is less than the respective statewide average.
- Using the plant-by-plant basis, 310 electric utility plants (63%) have surrounding child populations which exceed their statewide children benchmark percentages, whereas 185 of the electric utility plants (37%) have children populations below their statewide benchmarks, which represents a ratio of 1.68 (*i.e.,* 310/185). Since this ratio is much greater than 1.00, this finding indicates that a disproportionate number of electric utility plants have surrounding child population percentages which exceed their statewide benchmark. Using the state-by-state aggregation basis, 27 of the 47 states (57%) where the 495 electric utility plants are located have disproportionate percentages of children residing near the plants compared to the statewide averages, which also indicates a disproportionate surrounding child population. Using the nationwide aggregation basis across all 495 electric utility plants in all 47 states where the plants are located, 6.08 million people reside near these electric utility plants, including 1.54 million children (25.4%). Comparison of this percentage to the national aggregate benchmark across all states of 24.7% children yields a ratio of 1.03 (*i.e.,* 25.4%/24.7%). This ratio indicates a slightly higher disproportionate child population surrounding the 495 electric utility plants.

These three alternative comparisons indicate that the current (baseline) environmental and human health hazards and risks from electric utility CCR disposal units, and the expected future benefits of the regulatory options being considered in today's co-proposal may have a disproportionately higher effect on child populations.

The public is invited to submit comments or identify peer-reviewed studies and data that assess effects of early life exposure to CCRs managed in landfills and surface impoundments.

H. Executive Order 13211: Actions That Significantly Affect Energy Supply, Distribution, or Use

This co-proposal, if either of the options being considered is promulgated, is not expected to be a "significant energy action" as defined in Executive Order 13211 (66 FR 28355, May 22, 2001), because the regulatory options described in today's co-proposal are not expected to have a significant adverse effect on the supply, distribution, or use of energy. This determination is based on the energy price analysis presented in EPA's Regulatory Impact Analysis (RIA) for this proposed rule. The following is the basis for this conclusion.

The Office of Management and Budget's (OMB) July 13, 2001 Memorandum M–01–27 guidance for implementing this Executive Order identifies nine numerical indicators (thresholds) of potential adverse energy effects, three of which are relevant for evaluating potential energy effects of this proposed rule: (a) Increases in the cost of energy production in excess of 1%; (b) increases in the cost of energy distribution in excess of 1%; or (c) other similarly adverse outcomes.

Because EPA does not have data on energy production costs or energy distribution costs for the 495 electric utility plants likely affected by this rulemaking, EPA in its RIA for today's action evaluated the potential impact on electricity prices (for the regulatory options) as measured relative to the 1% numerical threshold of these two Executive Order indicators to represent an "other similarly adverse outcome."

The RIA calculated the potential increase in electricity prices of affected plants that the industry might induce under each regulatory option. Because the price analysis in the RIA is based only on the 495 coal-fired electric utility plants that would likely be affected by the co-proposal (with 333,500 megawatts nameplate capacity), rather than on all electric utility and independent electricity producer plants in each state using other fuels, such as natural gas, nuclear, hydroelectric, etc. (with 678,200 megawatts nameplate capacity), the price effects estimated in the RIA are higher than would be if the regulatory costs were averaged over the entire electric utility and independent electricity producer supply (totaling 1,011,700 megawatts, not counting an additional 76,100 megawatts of combined heat and electricity producers).

The price effect calculation in the RIA involved estimating plant-by-plant annual revenues, plant-by-plant average annualized regulatory compliance costs for each regulatory option, and comparison with statewide average electricity prices for the 495 electric utility plants. In its analysis, the Agency used the May 2009 statewide average retail prices for electricity published by DOE's, Energy Information Administration; these costs ranged from $0.0620 (Idaho & Wyoming) to $0.1892 (Hawaii) per kilowatt-hour, and the nationwide average for the 495 plants was $0.0884. Based on a 100% regulatory cost pass-thru scenario representing an upper-bound potential electricity price increase for each plant, the RIA estimated the potential target electricity sales revenue needed to cover these costs for each plant. The RIA then compared the higher target revenue to recent annual revenue estimates per plant, to calculate the potential price effect of this cost pass-thru scenario on electricity prices for each of the 495 electric utility plants, as well as on a state-by-state sub-total basis and on a nationwide basis across all 495 electric utility plants.

The RIA includes a set of higher cost estimates for the regulatory options and this Executive Order 13211 evaluation is based on the higher estimates and, therefore, overestimates the potential impacts of our proposal.

The RIA indicates that on a nationwide basis for all 495 electric utility plants, compared to the estimated average electricity price of $0.0884 per kilowatt-hour, the 100% regulatory cost pass-thru scenario may increase prices for the 495 electric utility plants by 0.172% to 0.795% across the original regulatory options; the high-end is the

estimate associated with a regulatory cost pass-thru scenario increase for the 495 electric utility plants for the subtitle C "special waste" option. Based on this analysis, the Agency does not expect that either of the options being co-proposed today would have a significant adverse effect on the supply, distribution, or use of energy. However, the Agency solicits comments on our analysis and findings.

I. National Technology Transfer and Advancement Act

Section 12(d) of the National Technology Transfer and Advancement Act of 1995 ("NTTAA"), Public Law No. 104–113, 12(d) (15 U.S.C. 272 note) directs EPA to use voluntary consensus standards in its regulatory activities unless to do so would be inconsistent with applicable law or otherwise impractical. Voluntary consensus standards are technical standards (*e.g.,* materials specifications, test methods, sampling procedures, and business practices) that are developed or adopted by voluntary consensus standards bodies. NTTAA directs EPA to provide Congress, through OMB, explanations when the Agency decides not to use available and applicable voluntary consensus standards.

This proposed rulemaking does not involve technical standards. Therefore, EPA is not considering the use of any voluntary consensus standards.

J. Executive Order 12898: Federal Actions To Address Environmental Justice in Minority Populations and Low-Income Populations

Executive Order (EO) 12898 (59 FR 7629, February 16, 1994) establishes federal executive policy on environmental justice. Its main provision directs federal agencies, to the greatest extent practicable and permitted by law, to make environmental justice part of their mission by identifying and addressing, as appropriate, disproportionately high and adverse human health or environmental effects of their programs, policies, and activities on minority populations and low-income (*i.e.,* below poverty line) populations in the United States.

Furthermore, Section 3–302(b) of EO 12898 states that Federal agencies, whenever practicable and appropriate, shall collect, maintain and analyze information on minority and low-income populations for areas surrounding facilities or sites expected to have substantial environmental, human health, or economic effects on the surrounding populations, when such facilities or sites become the subject of a substantial Federal environmental administrative or judicial action. While EO 12898 does not establish quantitative thresholds for this "substantial effect" criterion, EPA has collected and analyzed population data for today's co-proposal because of the substantial hazards and adverse risks to the environment and human health described elsewhere in today's notice.

The RIA for today's action presents comparisons of minority and low-income population Census data for each of the 495 electric utility plant locations, to respective statewide population data, in order to identify whether these two demographic groups may disproportionately reside near electric utility plants. The result of these comparisons indicate (a) whether existing hazards associated with CCR disposal at electric utility plants to community safety, human health, and the environment may disproportionately affect minority and low-income populations surrounding the plants, and (b) whether the expected effects (*i.e.,* benefits and costs) of the regulatory action described in today's co-proposal rule may disproportionately affect minority and low-income populations.

Of the 495 electric utility plants, 383 of the plants (77%) operate CCR disposal units onsite (*i.e.,* onsite landfills or onsite surface impoundments), 84 electric utility plants solely transport CCRs to offsite disposal units operated by other companies (*e.g.,* commercial waste management companies), and 28 of the electric utility plants generate CCRs that are solely beneficially used rather than disposed. The minority and low-income Census data evaluation is conducted for all 495 plants because some regulatory options could affect the future CCR management method (*i.e.,* disposal versus beneficial use) for some plants.

In addition to this Census data evaluation, the RIA identifies three other possible affects of the co-proposal on (a) populations surrounding offsite CCR landfills, (b) populations surrounding the potential siting of new CCR landfills and (c) populations within the customer service areas of the 495 electric utility plants who may incur electricity price increases resulting from regulatory cost pass-thru. These three Census data evaluations are also summarized below.

J.1. Findings of Environmental Justice Analysis for Electric Utility Plants

For the first comparison, the RIA provides three complementary approaches to evaluating the Census data on minority and low-income populations: (a) Itemized plant-by-plant comparisons to statewide percentages, (b) state-by-state aggregation comparisons, and (c) nationwide aggregate comparisons. There are year 2000 Census data for 464 (94%) of the 495 electric utility plants which the RIA used for these comparisons and extrapolated to all 495 plants. Statewide minority population benchmark percentages range from 3.1% (Maine) to 75.7% (Hawaii), with a nationwide average of 24.9%, and statewide low-income population percentages range from 7.3% (Maryland) to 19.3% (New Mexico), with a nationwide average of 11.9%.

For purpose of determining the relative degree by which either group may exceed these statewide percentages, in addition to a comparison of absolute percentages, the percentages are compared as a numerical ratio whereby a ratio of 1.00 indicates that the group population percentage living near an electric utility plant is equal to the statewide average, a ratio greater than 1.00 indicates the group population percentage near the electric utility plant is higher than the statewide population, and a ratio less than 1.00 indicates the group population is less than the respective statewide average.

Using the plant-by-plant comparison, 138 electric utility plants (28%) have surrounding minority populations which exceed their statewide minority benchmark percentages, whereas 357 of the electric utility plants (72%) have minority populations below their statewide benchmarks, which represents a ratio of 0.39 (*i.e.,* 138/357). Because this ratio is less than 1.00, this finding indicates a relatively small number of the electric utility plants have surrounding minority population percentages which disproportionately exceed their statewide benchmarks. On a plant zip code tabulation area basis, 256 electric utility plants (52%) have surrounding low-income populations which exceed their respective statewide benchmarks, whereas 239 plants (48%) have surrounding low-income populations below their statewide benchmarks, which represents a ratio of 1.07 (*i.e.,* 256/239). Because this ratio is above 1.00, it indicates that a slightly disproportionate higher number of electric utility plants have surrounding low-income population percentages which exceed their statewide benchmarks.

Using the state-by-state aggregation comparison, the percentages of minority and low-income populations surrounding the plants were compared to their respective statewide population benchmarks. From this analysis, state ratios revealed that 24 of the 47 states

(51%) have higher minority percentages, and 29 of the 47 states (62%) have higher low-income percentages surrounding the 495 electric utility plants, suggesting a slightly disproportionate higher minority surrounding population and a higher disproportionate, higher low-income surrounding population. However, in comparison to the other two numerical comparisons—the plant-by-plant basis and the nationwide aggregation basis, this approach does not include numerically weighting of state plant counts or state surrounding populations, which explains why this comparison method yields a different numerical result.

Using the nationwide aggregation comparison across all 495 electric utility plants in all 47 states where the plants are located, 6.08 million people reside near these plants, including 1.32 million (21.7%) minority and 0.8 million (12.9%) low-income persons. A comparison of these percentages to the national benchmark of 24.9% minority and 11.9% low-income, represents a minority ratio of 0.87 (*i.e.,* 21.7%/24.9%) and a low-income ratio of 1.08 (*i.e.,* 12.9%/11.9%). These nationwide aggregate ratios indicate a disproportionately lower minority population surrounding the 495 electric utility plants, and a disproportionately higher low-income population surrounding these plants.

These demographic data comparisons indicate that the current (baseline) environmental and human health hazards and risks from electric utility CCR disposal units, and the expected future effects (*i.e.,* benefits and costs) of the regulatory options described in today's co-proposal may have a disproportionately lower effect on minority populations and may have a disproportionately higher effect on low-income populations.

J.2. Environmental Justice Analysis for Offsite Landfills, Siting of New Landfills, and Electricity Service Area Customers

There are three other potential differential effects of the regulatory options on three other population groups: (a) Populations surrounding offsite landfills, (b) populations surrounding the potential siting of new landfills and (c) populations within the customer service areas of the 495 electric utility plants. The RIA for today's notice does not quantify these potential effects so only a qualitative discussion appears below.

The potential effect on offsite landfills as evaluated in the RIA only involves the RCRA subtitle C "special waste" based regulatory option described in today's co-proposal, whereby electric utility plants may switch the management of CCRs, in whole or in part, from current onsite disposal to offsite commercial RCRA-permitted landfills. In addition, some or all of the CCRs which are currently disposed in offsite landfills that do not have RCRA operating permits may also switch to RCRA-permitted commercial landfills. Another fraction of annual CCR generation which could also switch to offsite commercial RCRA-permitted landfills are CCRs which are currently supplied for industrial beneficial use applications if such use is curtailed.

The future addition of any or all of these three fractions of CCR generation to offsite commercial hazardous waste landfills could exceed their capacity considering that a much smaller quantity of about 2 million tons per year of existing RCRA-regulated hazardous waste is currently disposed of in RCRA subtitle C permitted landfills in the U.S. As of 2009, there are 19 commercial landfills with RCRA hazardous waste permits to receive and dispose of RCRA-regulated hazardous wastes located in 15 states (AL, CA, CO, ID, IL, IN, LA, MI, NV, NY, OH, OK, OR, TX, UT). This potential shift could have a disproportionate effect on populations surrounding these locations, and in particular, minority and low-income populations surrounding commercial hazardous waste facilities, for the reason that a recent (2007) study determined that minority and low-income populations disproportionately live near commercial hazardous waste facilities. However, the study included other types of commercial hazardous waste treatment and disposal facilities in addition to commercial hazardous waste landfills.

The siting of new landfills is another potential effect due to possible changes in the management of CCRs, especially if the switch to offsite commercial hazardous waste landfills causes a capacity shortage (as described above) under subtitle C option. However, since it is unknown where these new landfills might possibly be sited, two possibilities were examined: (a) An expansion of existing commercial subtitle C landfills offsite from electric utility plants, and (b) an expansion of existing electric utility plant onsite landfills. If an expansion of existing commercial subtitle C landfills were to occur, this potential shift could have a disproportionate effect on populations surrounding these locations, as described previously.

The other possibility is the expansion of electric utility plant onsite landfills. That is, these landfills become permitted under RCRA subtitle C and expand existing onsite landfills or build new ones onsite. If this were to occur, the environmental justice impacts could be similar to the demographic comparison findings previously discussed, which indicates that the current environmental and human health hazards and risks from electric utility CCR disposal units, and the expected future effects (*i.e.,* benefits and costs) of the regulatory options, may have a disproportionately lower effect on minority populations, but may have a disproportionately higher effect on low-income populations.

A third potential effect of the regulatory options described in today's notice is the increase in price of electricity supplied by some or all of the affected 495 electric utility plants to cover the cost of regulatory compliance (as evaluated in a previous section of today's notice). Thus, customers in electric utility service areas could experience price increases, as described above in the Federalism sub-section of today's notice. The RIA for today's action did not evaluate the demographics of the customer service area populations for the 495 electric utility plants.

Appendix to the Preamble: Documented Damages From CCR Management Practices

EPA has gathered or received through comments on the 1999 Report to Congress and the May 2000 Regulatory Determination, and through allegations, 135 possible damage cases. Six cases involved minefills and, therefore, are outside the scope of today's proposed rule. Sixty-two cases have not been further assessed because there was little or no supporting information to assess the allegations.

Of the remaining 67 cases, EPA determined that 24 were proven damage cases. Sixteen were determined to be proven damage cases to ground water and eight were determined to be proven damages cases to surface water, as a result of elevated levels of contaminants from CCRs.[172] Four of the proven ground water damage cases were from unlined landfills, five were from unlined surface impoundments, one

[172] Of the 16 proven cases of damages to ground water, the Agency has been able to confirm that corrective action has been completed in seven cases and are ongoing in the remaining nine cases. Corrective action measures at these CCR management units vary depending on site specific circumstances and include formal closure of the unit, capping, re-grading of ash and the installation of liners over the ash, ground water treatment, groundwater monitoring, and combinations of these measures.

involved a surface impoundment for which it is not clear whether the unit was lined, and the remaining six were from unlined sand and gravel pits. Another 43 alleged cases were determined to be potential damage cases to ground water or surface water. However, four of these potential damage cases were attributable to oil combustion wastes, which are outside the scope of this notice. Therefore, we have determined that there were a total of 40 potential damage cases attributable to CCRs. (The concern with wastes from the combustion of oil involved unlined surface impoundments. Prior to the May 2000 Regulatory Determination, the unlined oil ash impoundments were closed, and thus EPA decided regulatory action to address oil ash was unnecessary.) These cases are discussed in more detail in the document "Coal Combustion Wastes Damage Case Assessments" available in the docket to the 2007 NODA at *http://www.regulations.gov/fdmspublic/component/main?main=DocumentDetail&d=EPA-HQ-RCRA-2006-0796-0015*. Three proven damage cases are sites that have been listed on EPA's National Priorities List (NPL). The sites, and links to additional information are: (1) Chisman Creek, Virginia (*http://www.epa.gov/reg3hwmd/npl/VAD980712913.htm*), (2) Salem Acres, Massachusetts (*http://yosemite.epa.gov/r1/npl_pad.nsf/f52fa5c31fa8f5c885256adc0050b631/C8A4A5BEC0121F048525691F0063F6F3?OpenDocument*), and (3) U.S. Department of Energy Oak Ridge Reservation, Tennessee (*http://www.epa.gov/region4/waste/npl/npltn/oakridtn.htm*). One potential damage case has also been listed on the NPL: Lemberger Landfill, Wisconsin (*http://www.epa.gov/region5/superfund/npl/wisconsin/WID980901243.htm*). Another site has undergone remediation under EPA enforcement action: Town of Pines (*http://cfpub.epa.gov/supercpad/cursites/cactinfo.cfm?id=0508071*).

In response to the 2007 NODA (*see* section II. A.), EPA received information on 21 alleged damage cases. Of these, 18 pertain to alleged violations of state solid waste permits, and 3 to alleged violations of NPDES permits. Upon review of this information, we conclude that 13 of the alleged RCRA violations are new, and one of the alleged NPDES violations is new; the other damage cases have previously been submitted to EPA and evaluated. In addition, five new alleged damage cases have been brought to EPA's attention since February 2005 (the closure date of damage cases assessed by the NODA's companion documents). For the most part, these cases involve activities that are different from the prior damage cases and the focus of the regulatory determination on groundwater contamination from landfills and surface impoundments. Specifically:

- Two of the new alleged cases involve the structural failure of surface impoundments; *i.e.,* dam safety and structural integrity issues, which were not a consideration at the time of the May 2000 Regulatory Determination. In both cases, there were Clean Water Act violations.
- One other alleged case involves the failure of an old discharge pipe, and is clearly a regulated NPDES permit issue.
- Two other alleged cases involve the use of coal ash in large scale structural fill operations, one of which involves an unlined sand and gravel pit. The Agency is considering whether to regulate this method of disposal as a landfill or whether to address the issue separately as part of its rulemaking to address minefilling. EPA is soliciting comments on those alternatives.

The Agency has classified three of the five new cases as proven damage cases (BBBS Sand and Gravel Quarries, Martins Creek Power Plant, TVA Kingston Power Plant), one as a potential damage case (Battlefield Golf Course), and the other as not being a damage case under RCRA (TVA Widows Creek). Several of the recently submitted damage cases are discussed briefly below. The following descriptions further illustrate that there are additional risk concerns (dam safety, and fill operations) which EPA did not evaluate when it completed its the May 2000 Regulatory Determination, in which EPA primarily was concerned with groundwater contamination associated with landfills and surface impoundments and the beneficial use of CCRs. Additional information on these damage cases is included in the docket.

Recent Cases

BBBS Sand and Gravel Quarries—Gambrills, Maryland

On October 1, 2007, the Maryland Department of the Environment (MDE) filed a consent order in Anne Arundel County, Maryland Circuit Court to settle an environmental enforcement action that was taken against the owner of a sand and gravel quarry and the owner of coal fired power plants (defendants) for contamination of public drinking water wells in the vicinity of the sand and gravel quarry.

Specifically, beginning in 1995, the defendants used fly ash and bottom ash from two Maryland power plants to fill excavated portions of two sand and gravel quarries. Ground water samples collected in 2006 and 2007 from residential drinking water wells near the site indicated that, in certain locations, contaminants, including heavy metals and sulfates were present at or above ground water quality standards. The Anne Arundel County, Maryland Department of Health tested private wells in 83 homes and businesses in areas around the disposal site. MCLs were exceeded in 34 wells [arsenic (1), beryllium (1), cadmium (6), lead (20),[173] and thallium (6)]. The actual number of wells affected by fly ash and bottom ash is undetermined since some of the sample results may reflect natural minerals in the area. SMCLs were exceeded in 63 wells [aluminum (44), manganese (14), and sulfate (5)]. MDE concluded that leachate from the placement of CCRs at the site resulted in the discharge of pollutants to waters of the state. Based on these findings, as well as an MDE consent order, EPA has concluded that the Gambrills site is a proven case of damage to ground water resulting from the placement of CCRs in unlined sand and gravel quarries.

Under the terms of the consent order, the defendants are required to pay a fine, remediate the ground water in the area and provide replacement water supplies for 40 properties. A retail development is now planned for the site with a cap over the fill designed to reduce infiltration and subsequent leaching from the site. An MDE fact sheet on this site is available at *http://www.mde.state.md.us/assets/document/AA_Fly_Ash_QA.pdf*.

Battlefield Golf Course—Chesapeake, Virginia

On July 16, 2008, the City of Chesapeake, Virginia sent a letter to the EPA Region III Regional Administrator requesting assistance to perform an assessment of the Battlefield Golf Course. The 216 acre site was contoured with 1.5 million cubic yards of fly ash, amended with 1.7% to 2.3% cement kiln dust to develop the golf course. Virginia's Administrative Code allowed the use of fly ash as fill material (considered a beneficial use under Virginia's Administrative Code) without a liner as long as the fly ash was placed at least two feet above groundwater and covered by an 18-inch soil cap.

Because of ground water contamination discovered at another site where fly ash was used, the City of

[173] It is uncertain whether lead exceedances were due to CCRs or lead in plumbing and water holding tanks.

Chesapeake initiated a drinking water well sampling assessment at residences surrounding the golf course. Additionally, 13 monitoring points were installed around the site. No monitoring points were installed through the fly ash area to avoid creating an additional path of contaminant migration. EPA conducted a site investigation by reviewing analytical data from fly ash, soil, surface water, sediment, and groundwater sampling events completed in 2001, 2008 and 2009. The sampling results of the City of Chesapeake ground water and surface water sampling [174] indicated that the highest detections of metals occurred in monitoring wells located on the golf course property. The concentrations of arsenic, boron, chromium, copper, lead and vanadium detected in groundwater collected from on-site monitoring wells were considered to be significantly above background concentrations. Of these compounds, only boron has been detected in approximately 25 drinking water wells.

Although not a primary contaminant of concern, boron is suspected to be the leading indicator of fly ash migration. The highest level of boron reported in a residential well was 596 µg/L which was significantly below the health-based regional screening level for boron in tap water of 7,300 µg/L. Additionally, the secondary drinking water standard for manganese (0.05 mg/L) was exceeded in nine residential wells; however, the natural levels of both manganese and iron in the area's shallow aquifer are very high and, thus, it could not be ruled out that the elevated levels of manganese and iron are a result of the natural background levels of these two contaminants.

Metal contaminants were below MCLs and Safe Drinking Water Act (SDWA) action levels in all residential wells that EPA tested, except for lead. Lead has been detected during EPA sampling events above the action level of 15 µg/L in six residential wells. The lead in these wells, however, does not appear to come from the fly ash. Lead concentrations are lower in groundwater collected from monitoring wells on the golf course (1.1 to 1.6 µg/L) than in these residential wells; and lead concentrations in the fly ash are not higher than background concentrations of lead in soil.

The recently issued EPA Final Site Inspection Report [175] concluded that (i) Metal contaminants were below MCLs and Safe Drinking Water Act (SDWA) action levels in all residential wells that EPA tested; (2) the residential well data indicate that metals are not migrating from the fly ash to residential wells; and (iii) there are no adverse health effects expected from human exposure to surface water or sediments on the Battlefield Golf Course site as the metal concentrations were below the ATSDR standards for drinking water and soil. Additionally, the sediment samples in the ponds were below EPA Biological Technical Assistance Group screening levels and are not expected to pose a threat to ecological receptors. Based on these findings, EPA has categorized the Battlefield Golf Club site as a potential damage case, as there is a possibility that leaching could cause levels of toxic constituents to increase over time and that groundwater could become contaminated at off-site locations if due diligence is not practiced.

Martins Creek Power Plant—Martins Creek, Pennsylvania

In August 2005, a dam confining a 40 acre CCR surface impoundment in eastern Pennsylvania failed. The dam failure, a violation of the State's solid waste disposal permit, resulted in the discharge of 0.5 million cubic yards of coal-ash and contaminated water into the Oughoughton Creek and the Delaware River.

Ground-water monitoring results from approximately 20 on-site monitoring wells found selenium concentrations exceeding Pennsylvania's Statewide Health Standards and Federal primary drinking water standards. There was also one exceedance of the primary MCL for chromium and two exceedances of the secondary MCL for iron.

Surface water samples were also taken from a number of locations along the Delaware River upstream and downstream of the spill. Sampling began soon after the spill in August 2005 and continued through November 2005. Several samples exceeded the Federal Water Quality Criteria (WQC) for aluminum, copper, iron, manganese, and silver (*see http://www.epa.gov/waterscience/criteria/wqctable/index.html*). Four samples also exceeded the WQC for arsenic—three of which were taken near the outfall to the river. Lead, nickel and zinc were also detected above the WQC in samples taken near the outfall to the river. Sampling results are available from the Pennsylvania Department of Environmental Protection (PADEP) at *http://www.depweb.state.pa.us/northeastro/cwp/view.asp?a=1226&q=478264&northeastroNav=|*.

As a result of the exceedances of primary and secondary MCLs in on-site ground water, and exceedances of federal water quality criteria in off-site surface water, in addition to a PADEP consent order for clean up, the Agency considers this site to be a proven damage case.

TVA Kingston—Harriman, Tennessee

On December 22, 2008, a failure of the northeastern dike used to contain fly ash occurred at the dewatering area of the Tennessee Valley Authority's (TVA's) Kingston Fossil Plant in Harriman, Tennessee. Subsequently, approximately 5.4 million cubic yards of fly ash sludge was released over an approximately 300 acre area and into a branch of the Emory River. The ash slide disrupted power, ruptured a gas line, knocked one home off its foundation and damaged others. The state-issued NPDES permit requires that TVA properly operate and maintain all facilities and systems for collection and treatment, and expressly prohibits overflows of wastes to land or water from any portion of the collection, transmission, or treatment system other than through permitted outfalls. Therefore, the release was a violation of the NPDES permit. A root-cause analysis report developed for TVA, accessible at *http://www.tva.gov/kingston/rca/index.htm,* established that the dike failed because it was expanded by successive vertical additions, to a point where a thin, weak layer of fly ash ('slime') on which it had been founded, failed by sliding. Additional information on the TVA Kingston incident is available at *http://www.epa.gov/region4/kingston/index.html* and *http://www.tva.gov/kingston/*.

EPA joined TVA, the Tennessee Department of Environment and Conservation (TDEC), and other state and local agencies in a coordinated response. EPA provided oversight and technical advice to TVA, and conducted independent water sampling and air monitoring to evaluate public health and environmental threats.

Following the incident, EPA sampled the coal ash and residential soil to determine if the release posed an immediate threat to human health. Sampling results for the contaminated residential soil showed arsenic, cobalt, iron, and thallium levels above the residential Superfund soil screening levels.[176] Sampling results also showed

[174] *Available at http://cityofchesapeake.net/services/citizen_info/battlefieldgolfclub/index.shtml.*

[175] *http://www.epa.gov/reg3hwmd/CurrentIssues/finalr-battlefield_golf_club_site/redacted_DTN_0978_Final_Battlefield_SI_Report.pdf.*

[176] Soil screening levels (SSLs) for contaminants in soil are used to identify sites needing further

average arsenic levels above the EPA Region 4 Residential Removal Action Level (RAL) [177] of 39 mg/L, but below EPA Region 4's Industrial RAL of 177 mg/L. All residential soil results were below the Residential RAL.

Shortly after the release, samples were also collected of untreated river water, which showed elevated levels of suspended ash and heavy metals known to be associated with coal ash. Nearly 800 surface water samples were taken by TVA and TDEC, ranging from two miles upstream of the release on the Emory River to approximately eight miles downstream on the Clinch River. Sampling results of untreated river water showed elevated levels of arsenic, cadmium, chromium, and lead just after the incident. This was also observed again after a heavy rainfall. In early January 2009, the Tennessee Wildlife Resources Agency (TWRA) issued a fish advisory stating that until further notice, fishing should be avoided in the lower section of the Emory River. TWRA plans to resample fish tissue on a semiannual basis and expects that the assessment of the impact of this release on wildlife resources and habitat will require repeated sampling and evaluation over the next three to five years.

Constituent concentrations measured in drinking water on December 23, 2008, near the intake of the Kingston Water Treatment Plant, located downstream of the release, were below federal MCLs for drinking water, with the exception of elevated thallium levels. Subsequent EPA testing on December 30, 2008, of samples at the same intake found that concentration levels for thallium had fallen below the MCL. Subsequent testing of treated drinking water from the Kingston Water Treatment Plant showed that the drinking water from the treatment plant met all federal drinking water standards.

Additionally, EPA and TDEC identified and sampled potentially impacted private wells that are used as a source for drinking water. More than 100 wells have been tested to date and all have met drinking water standards.

To address potential risks from windblown ash, TVA, under EPA oversight, began air monitoring for coarse and fine particles. EPA also conducted independent monitoring to validate TVA's findings. To date, all of the more than 25,000 air samples from this area have measured levels below the NAAQS for particulates.

On January 12, 2009, TDEC issued an order to TVA to, among other things, continue to implement measures to prevent the movement of contaminated materials into waters of the state and, where feasible, minimize further downstream migration of contaminated sediments.

Than on May 11, 2009, TVA agreed to clean up more than 5 million tons of coal ash spilled from its Kingston Fossil Fuel Plant under an administrative order and agreement on consent. TVA and EPA entered into the agreement under CERCLA. The order requires TVA to perform a thorough cleanup of coal ash from the Emory River and surrounding areas and EPA will oversee the removal. Based on the consent order, EPA has identified this site as a proven damage case.

TVA Widows Creek—Stevenson, Alabama

On Friday, January 9, 2009, a cap in an unused discharge pipe became dislodged, resulting in a discharge from an FGD pond at a Tennessee Valley Authority (TVA) coal-burning power plant in Stevenson, Alabama. FGD is a residual of a process that reduces sulfur dioxide emissions from coal-fired boilers Some 5,000 cubic yards of FGD material containing water and a mixture of predominantly gypsum and some fly ash, was released from the pond into Widows Creek which flows into the Tennessee River.[178] Information on the TVA Widows Creek incident is available at *http://www.epa.gov/region4/stevenson/index.html*.

EPA joined TVA and the Alabama Department of Environmental Management (ADEM) in a coordinated response. EPA is supporting the response by coordinating environmental sampling and monitoring response operations by TVA. EPA has also collected surface water samples from both Widows Creek and the Tennessee River to determine if there have been any environmental impacts. Samples have also been taken from the FGD pond to characterize the material that was released into the creek fully. The drinking water intake for Scottsboro, Alabama, about 20 miles downstream, has also been sampled.

EPA Region 4 has received final results of its independent environmental sampling activities for the TVA Widows Creek Fossil Plant FGD pond release. Specifically, the concentrations of metals, solids and nutrients detected in samples drawn from the drinking water intake for Scottsboro, Alabama, along with samples collected from two locations in Widows Creek and three other locations in the Tennessee River, are all below national primary drinking water standards and/or other health-based levels. The pH of all these samples also fell within the standard range and no oil or grease was detected in any of the samples.

Four waste samples and one water sample collected from the bank along the ditch connecting TVA's permitted discharge outfall and the Tennessee River, and from TVA's permitted discharge outfall showed elevated pH and elevated concentrations of metals, nutrients, and suspended and dissolved solids. However, because samples drawn downstream at the drinking water intake and from locations where individuals would likely come into contact with the water were below the primary drinking water standards, EPA does not expect the release to pose a threat to the public. On July 7, 2009, TVA issued a finding of no significant impact and final environmental assessment for the Gypsum Removal Project from Widows Creek.[179] Therefore, EPA has not classified the TVA Widows Creek fly ash release as a damage case.

Summary

In summary, as discussed above, the Agency has documented evidence of proven damages to ground water or surface water in 27 cases [180]—17 cases of damage to ground water, and ten cases of damage to surface water, including ecological damages in seven of the ten. Sixteen of the 17 proven damages to ground water involved disposal in unlined units (for the remaining unit, it is unclear whether a liner was present). We have also identified 40 cases of potential damage to ground water or surface water.[181] Another two cases were determined to be potential ecological damage cases. Finally, the more recently documented damage cases also provide evidence that current management practices can pose additional risks that EPA had not

investigation. SSLs alone do not trigger the need for a response action or define "unacceptable" levels of contaminants in soil. Generally, at sites where contaminant concentrations fall below the SSLs, no further action or study is warranted under CERCLA. However, where contaminant concentrations equal or exceed the SSLs, further study or investigation, but not necessarily cleanup, is warranted.

[177] RALs are used to trigger time-critical removal actions.

[178] *http://www.tva.gov/emergency/wc_1-29-09.htm*.

[179] *http://www.tva.gov/environment/reports/widows_creek/wcf_gypsum_removal_fonsi.pdf*.

[180] The 24 cases identified in the Damage Cases Assessment report, plus Martin Creek, PA; Gambrills, MD; and Kingston/TVA, TN.

[181] The 39 cases of potential damages from CCR identified in the Damage Cases Assessment report (excludes the 4 damage cases from oil combustion wastes), plus the Battlefield Golf Course, Chesapeake, Virginia.

previously studied—that is, from catastrophic releases due to the structural failure of CCR surface impoundments.

TABLE OF EPA'S PROVEN DAMAGE CASES

Damage case, State	Affected media	Constituents of concern	Brief description	Basis for consideration as a proven damage case
Alliant Nelson Dewey Ash Landfill, WI.	Groundwater	Arsenic, Selenium, Sulfate, Boron, Flourine.	The LF [182] was originally constructed in the early 1960's as a series of settling basins for sluiced ash and permitted by the State in 1979.	*Scientific*—Although the boron standard was not health-based at the time of the exceedances, the boron levels reported for the facility would have exceeded the State's recently promulgated health-based ES for boron, and *Administrative*—The State required a groundwater investigation, and the facility took action to remediate groundwater contamination and prevent further contamination.
Dairyland Power E.J. Stoneman, WI.	Groundwater	Cadmium, Chromium, Sulfate, Manganese, Iron, Zinc.	Unlined SI [183], on permeable substrate, that managed ash, demineralizer regenerant, and sand filter backwash between the 1950'and 1987.	*Scientific*—Cadmium and chromium exceeded (health-based) primary MCLs, and contamination migrated to nearby, private drinking water wells, and *Administrative*—The State required closure of the facility.
WEPCO Cedar Sauk Ash Landfill/WEPCO, WI.	Groundwater	Selenium, Boron, Sulfate.	An abandoned sand and gravel pit that received CCW from the WEPCO Port Washington Power Plant from 1969 to 1979.	*Scientific*—Selenium in groundwater exceeded the (health-based) primary MCL, and there was clear evidence of vegetative damage, and *Administrative*—The State required remedial action.
WEPCO Highway 59 Landfill/We Energies 59, WI.	Groundwater	Arsenic, Boron, Chlorides, Iron, Manganese, Sulfate.	Located in an old sand and gravel pit that received fly ash and bottom ash between 1969 and 1978.	*Scientific*—Although the boron standard was not health-based at the time of the exceedances, the boron levels reported for the facility would have exceeded the State's recently promulgated health-based ES for boron; and contamination from the facility appears to have migrated to off-site private wells, and *Administrative*—As a result of the various PAL [184] and ES [185] exceedances, the State required a groundwater investigation.
WEPCO Port Washington Facility/ Druecker Quarry Fly Ash Site, WI.	Groundwater	Boron, Selenium	The power company placed 40–60 feet deep column of fly ash in a sand & gravel pit from 1948–1971. A well located ~250′ south of the old quarry was impacted.	*Scientific*—The off-site exceedance of a health-based standard for selenium.
SC Electric & Gas Canadys Plant, SC.	Groundwater	Arsenic, Nickel	Ash from the Canadys power plant was mixed with water and managed in a SI. The facility operated an unlined, 80-acre SI from 1974 to 1989.	*Scientific*—There are exceedances of the health-based standard for arsenic at this site. While there are no known human exposure points nearby, some recent exceedances have been detected outside an established regulatory boundary.
PEPCO Morgantown Generating Station Faulkner Off-site Disposal Facility, MD.	Groundwater	Iron, pH	LFs at this shallow groundwater site manage fly ash, bottom ash, and pyrites from the Morgantown Generating Station starting in 1970. Unlined settling ponds also are used at the site to manage stormwater runoff and leachate from the ash disposal area.	*Scientific*—Ground water contamination migrated off-site, and *Administrative*—The State required remedial action.

TABLE OF EPA'S PROVEN DAMAGE CASES—Continued

Damage case, State	Affected media	Constituents of concern	Brief description	Basis for consideration as a proven damage case
Don Frame Trucking, Inc., Fly Ash Landfill, NY.	Groundwater	Lead, Manganese	This LF has been used for disposal of fly ash, bottom ash, and other material including yard sweepings generated by the Niagara Mohawk Power Corporation's Dunkirk Steam Station. The age of the facility is unknown.	*Scientific*—The lead levels found in down-gradient wells exceed the primary MCL Action Level. *Administrative*—The State has required remedial action as a result of the contamination, and the owner was directed, by the Supreme Court of the State of New York County of Chautauqua (July 22, 1988), to cease receiving the aforementioned wastes at the facility no later than October 15, 1988.
Salem Acres, MA	Groundwater	Antimony, Arsenic, Manganese.	Fly ash disposal occurred at this site—a LF and SI, from at least 1952 to 1969.	*Scientific*—Arsenic and chromium exceeded (health-based) primary MCLs, and *Administrative*—The site was placed on the NPL list, and EPA signed a Consent Order with the owner to clean up the lagoons.
Vitale Fly Ash Pit, MA ...	Groundwater	Aluminum, Arsenic, Iron, Manganese, Selenium.	An abandoned gravel and sand pit that was used as an unpermitted LF between the 1950s and the mid-1970s. The Vitale Brothers, the site owners until 1980, accepted and disposed saltwater-quenched fly ash from New England Power Company along with other wastes.	This case was not counted as a proven damage case in the 1999 RTC [186] because it was a case of illegal disposal not representative of historical or current disposal practices. However, it otherwise meets the criteria for a proven damage case for the following reasons: *Scientific*—(i) Selenium and arsenic exceeded (health-based) primary MCLs, and (ii) there is evidence of contamination of nearby wetlands and surface waters, and *Administrative*—the facility was the subject of several citations and the State has enforced remedial actions.
Town of Pines, IN	Groundwater	Boron, Molybdenum ...	NIPSCO's Bailly and Michigan City power plants have deposited ~1 million tons of fly ash in the Town of Pines since 1983. Fly ash was buried in the LF and used as construction fill in the town. The ash is pervasive on site, visible in roads and driveways.	*Scientific*—Evidence for boron, molybdenum, arsenic and lead exceeding health-based standards in water wells away from the Pines Yard 520 Landfill site, and *Administrative*—Orders of consent signed between the EPA and IDEM with responsible parties for continued work at the site.
North Lansing Landfill, MI.	Groundwater	Lithium, Selenium	The North Lansing Landfill (NLL), an unlined, former gravel quarry pit with an elevated groundwater table, was licensed in 1974 for disposal of inert fill materials including soil, concrete, and brick. From 1980 to 1997, the NLL was used for disposal of coal ash from the Lansing Board of Water and Light electric and steam generating plants.	*Scientific*—Observation of off-site exceedances of the State's health-based standard for lithium.
Basin Electric, W.J. Neal Plant, ND.	Groundwater	Aluminum, Arsenic, Barium, Copper, Manganese, Zinc.	An unlined, 44-acre SI that received fly ash and scrubber sludge from a coal-fired power plant, along with other wastes (including ash from the combustion of sunflower seed hulls), between the 1950s and the late 1980s.	*Scientific*—Several constituents have exceeded their (health-based) primary MCLs in down-gradient groundwater, and the site inspection found documentation of releases to ground water and surface water from the site, and *Administrative*—The State required closure of the facility.

TABLE OF EPA'S PROVEN DAMAGE CASES—Continued

Damage case, State	Affected media	Constituents of concern	Brief description	Basis for consideration as a proven damage case
Great River Energy (GRE)—(formerly Cooperative Power Association/United Power) Coal Creek Station, ND.	Groundwater	Arsenic, Selenium	This site includes a number of evaporation ponds and SIs that were constructed in 1978 and 1979. Both the SIs and the evaporation ponds leaked significantly upon plant start-up. A ND DOH regulator was uncertain as to whether a liner was initially installed, although the plant may have thought they were placing some sort of liner. The surficial soils were mostly sandy materials with a high water table.	*Scientific*—Arsenic and selenium exceeded (health-based) primary MCLs, and *Administrative*—The State required remedial action.
VEPCO Chisman Creek, VA.	Groundwater	Selenium, Sulfate, Vanadium.	Between 1957 and 1974, abandoned sand and gravel pits at the site received fly ash from the combustion of coal and petroleum coke at the Yorktown Power Station. Disposal at the site ended in 1974 when Virginia Power began burning oil at the Yorktown plant. In 1980, nearby shallow residential wells became contaminated with vanadium and selenium.	Designated as a proven damage case in the 1999 RTC. *Scientific*—(i) Drinking water wells contained selenium above the (health-based) primary MCL and (ii) There is evidence of surface water and sediment contamination, and *Administrative*—The site was remediated under CERCLA.
VEPCO Possum Point, VA.	Groundwater	Cadmium, Nickel	At this site, oil ash, pyrites, boiler chemical cleaning wastes, coal fly ash, and coal bottom ash were co-managed in an unlined SI, with solids dredged to a second pond.	Damage case described in the 1999 RTC. *Administrative*—Action pursued by the State based on evidence on exceedances of cadmium and nickel, by requiring the removal of the waste.
BBBS Sand and Gravel Quarries, Gambrills, MD.	Groundwater	Aluminum, Arsenic, Beryllium, Cadmium, Lead, Manganese, Sulfate, Thallium.	As of 1995, the defendants used fly ash and bottom ash from two Maryland power plants to fill excavated portions of two unlined sand and gravel quarries. GW samples collected in 2006/07 from residential drinking water wells near the site indicated contaminants at or above GW quality standards. Testing of private wells in 83 homes and businesses in areas around the disposal site revealed MCL exceedances in 34 wells, and SMCLs exceedances in 63 wells.	*Scientific*—Documented exceedances of MCLs in numerous off-site drinking water wells. *Administrative*—On October 1, 2007, the Maryland Department of the Environment (MDE) filed a consent order in Anne Arundel County, Maryland Circuit Court to settle an environmental enforcement action against the owner of a sand and gravel quarry and the owner of coal fired power plants for contamination of public drinking water wells in the vicinity of the sand and gravel quarry.

TABLE OF EPA'S PROVEN DAMAGE CASES—Continued

Damage case, State	Affected media	Constituents of concern	Brief description	Basis for consideration as a proven damage case
Hyco Lake, Roxboro, NC.	Surface Water ...	Selenium	Hyco Lake was constructed in 1964 as a cooling water source for the Electric Plant. The lake received discharges from the plant's ash-settling ponds containing high levels of selenium. The selenium accumulated in the fish in the lake, affecting reproduction and causing declines in fish populations in the late 1970s and 1980s.	*Scientific*—Declines in fish populations were observed (1970s & 1980s). *Administrative*—The State concluded that the impacts were attributable to the ash ponds, and issued a fish consumption advisory as a result of the contamination.
Georgia Power Company, Plant Bowen, Cartersville, GA.	Surface Water ...	Ash Slurry	This unlined SI was put in service in 1968. On July 28, 2002, a sinkhole developed in the SI that ultimately reached four acres in area. An estimated 2.25 million gallons of ash/water mixture was released to a tributary of the Euharlee Creek, containing 281 tons of ash.	*Scientific*—Unpermitted discharge of water containing ash slurry into the Euharlee Creek resulting in a temporary degradation of public waters. *Administrative*—Georgia Department of Natural Resources issued a consent order requiring, among others, a fine and corrective action.
Department of Energy—Oak Ridge Y–12 Plant Chestnut Ridge Operable Unit 2, DOE Oak Ridge Reservation, Oak Ridge, TN.	Surface Water ...	Aluminum, Arsenic, Iron, Manganese.	The Filled Coal Ash Pond (FCAP) is an ash retention SI used to dispose of coal ash slurry from the Y–12 steam plant. It was constructed in 1955 by building an earthen dam across a northern tributary of Upper McCoy Branch. After the SI was filled to capacity, the slurry was released directly into Upper McCoy Branch. Erosion of both the spillway and the ash itself resulted in releases of ash into Upper McCoy Branch.	*Scientific*—Exceedances of primary and secondary MCLs were detected in on-site monitoring locations. *Administrative*—Federal RCRA and the Tennessee Department of Environmental Conservation (TDEC) requirements, including placement of the entire Oak Ridge Reservation on the NPL.
Belews Lake, NC	Surface Water ...	Selenium	This Lake was impounded in the early 1970s to serve as a cooling reservoir for a large coal-fired power plant. Fly ash was disposed in a settling basin, which released selenium-laden effluent in return flows to the Lake. Sixteen of the 20 fish species originally present in the reservoir were entirely eliminated.	*Scientific*—Evidence of extensive impacts on fish populations due to direct discharge to a surface water body. *Administrative*—The State required changes in operating practices to mitigate the contamination.

TABLE OF EPA'S PROVEN DAMAGE CASES—Continued

Damage case, State	Affected media	Constituents of concern	Brief description	Basis for consideration as a proven damage case
U.S. Department of Energy Savannah River Project, SC.	Surface Water ...	Not cited	A coal-fired power plant sluices fly ash to a series of open settling basins. A continuous flow of sluice water exits the basins, overflows, and enters a swamp that in turn discharges to Beaver Dam Creek. Bullfrog tadpoles inhabiting the site have oral deformities and impaired swimming and predator avoidance abilities, and there also is evidence of metabolic impacts on water snakes inhabiting the site.	*Scientific*—Evidence of impacts on several species in a nearby wetland caused by releases from the ash settling ponds.
Brandy Branch Reservoir, TX.	Surface Water ...	Selenium	A power plant cooling reservoir built in 1983 for Southwestern Electric Power Company's Pirkey Power Plant. The cooling reservoir received discharges from SIs containing elevated levels of selenium.	*Scientific*—Observations of impacts on fish populations were confirmed by scientific study, based on which the State concluded that the impacts were attributable to the ash ponds. *Administrative*—The State issued a fish consumption advisory as a result of the contamination.
Southwestern Electric Power Company Welsh Reservoir, TX.	Surface Water ...	Selenium	This Lake was constructed in 1976 to serve as a cooling reservoir for a power plant and receives discharges from an open SI. The Texas Parks and Wildlife Department's monitoring documents elevated levels of selenium and other metals in fish.	*Scientific*—Selenium accumulation in fish may be attributable to the ash settling ponds. *Administrative*—The State has issued a fish consumption advisory as a result of the contamination.
Texas Utilities Electric Martin Lake Reservoir, TX.	Surface Water ...	Selenium	This Lake was constructed in 1974 to serve as a cooling reservoir for a power plant and was the site of a series of major fish kills in 1978 and 1979. Investigations determined that unpermitted discharges from ash settling ponds resulted in elevated levels of selenium in the water and fish.	*Scientific*—Evidence of adverse effects on wildlife—impacts on fish populations were observed, and the State concluded that the impacts were attributable to the ash setting ponds. *Administrative*—The State has issued a fish consumption advisory as a result of the contamination.
Martins Creek Power Plant, Martins Creek, PA.	Groundwater and Surface Water.	Aluminum, Arsenic, Chromium, Copper, Iron, Lead, Manganese, Nickel, Selenium, Silver, Zinc.	In August 2005, a dam confining a 40 acre CCR SI failed. The dam failure, a violation of the State's solid waste disposal permit, resulted in the discharge of 100 million gallons of coal-ash and contaminated water into the Oughoughton Creek and the Delaware River. Ground-water monitoring found Se and Cr concentrations exceeding Pennsylvania's Statewide Health Standards and Federal primary drinking water standards, and there were also exceedances of the secondary MCL for iron.	*Scientific*—Exceedances of primary and secondary MCLs in on-site ground water, and exceedances of federal water quality criteria in off-site surface water, and *Administrative*—PA DEP issued a consent order for cleanup.

TABLE OF EPA'S PROVEN DAMAGE CASES—Continued

Damage case, State	Affected media	Constituents of concern	Brief description	Basis for consideration as a proven damage case
TVA Kingston, Harriman, TN.	Surface Water ...	Arsenic, Cobalt, Iron, Thallium.	On December 22, 2008, the northeastern dike of a SI failed. About 5.4 million cubic yards of fly ash sludge was released over about a 300 acre area and into a branch of the Emory River, disrupting power, rupturing a gas line, and destroying or damaging scores of homes. Sampling results for the contaminated residential soil showed arsenic, cobalt, iron, and thallium levels above the residential Superfund soil screening levels.	*Administrative*—On May 11, 2009, TVA agreed to clean up more than 5 million tons of spilled coal ash under an administrative order and agreement on consent under CERCLA issued by the USEPA, and In early January 2009, the Tennessee Wildlife Resources Agency (TWRA) issued a fish advisory stating that until further notice, fishing should be avoided in the lower section of the Emory River.

Abbreviations key:
1 LF—Landfill
2 SI—Surface Impoundment
3 PAL—Prevention Action Level
4 ES—Enforcement Standard
5 RTC—Report to Congress

List of Subjects

40 CFR Part 257

Environmental Protection, coal combustion products, coal combustion residuals, coal combustion waste, beneficial use, disposal, hazardous waste, landfill, surface impoundment.

40 CFR Part 261

Hazardous waste, Recycling, Reporting and recordkeeping requirements.

40 CFR Part 264

Air pollution control, Hazardous waste, Insurance, Packaging and containers, Reporting and recordkeeping requirements, Security measures, Surety bonds.

40 CFR Part 268

Hazardous waste, Reporting and recordkeeping requirements.

40 CFR Part 271

Administrative practice and procedure, Confidential business information, Hazardous materials transportation, Hazardous waste, Indians-lands, Intergovernmental relations, Penalties, Reporting and recordkeeping requirements, Water pollution control, Water supply.

40 CFR Part 302

Air pollution control, Chemicals, Hazardous substances, Hazardous waste, Intergovernmental relations, Natural resources, Reporting and recordkeeping requirements, Superfund, Water pollution control, Water supply.

Dated: May 4, 2010.

Lisa P. Jackson,

Administrator.

For the reasons set out in the preamble, title 40, chapter I of the Code of Federal Regulations is proposed to be amended as follows:

Alternative 1: Co-Proposal Under Authority of Subtitle D

PART 257—CRITERIA FOR CLASSIFICATION OF SOLID WASTE DISPOSAL FACILITIES AND PRACTICES

1. The authority citation for part 257 continues to read as follows:

Authority: 42 U.S.C., 6907(a)(3), 6912(a)(1), 6944(a), and 6949a(c); 33 U.S.C. 1345(d) and (e).

2. Section 257.1 is amended by revising the last sentence of paragraph (a) introductory text, revising paragraphs (a)(1) and (a)(2), and adding new paragraph (c)(12) to read as follows:

§ 257.1 Scope and purpose.

(a) * * * Unless otherwise provided, the criteria §§ 257.51 through 257.101 are adopted for determining which CCR Landfills and CCR Surface impoundments pose a reasonable probability of adverse effects on health or the environment under sections 1008(a)(3) and 4004(a) of the Act.

(1) Facilities failing to satisfy either the criteria in §§ 257.1 through 257.4 or §§ 257.5 through 257.30 or §§ 257.51 through 257.101 are considered open dumps, which are prohibited under section 4005 of the Act.

(2) Practices failing to satisfy either the criteria in §§ 257.1 through 257.4 or §§ 257.5 through 257.30 or §§ 257.51 through 257.101 constitute open dumping, which is prohibited under section 4005 of the Act.

* * * * *

(c) * * *

(12) Except as otherwise provided in subpart C, the criteria in subpart A of this part do not apply to CCR landfills and CCR surface impoundments subject to subpart C of this part.

3. Section 257.2 is amended by adding definitions of "CCR landfill " and "CCR surface impoundment or impoundment" to read as follows:

§ 257.2 Definitions.

* * * * *

CCR landfill means a disposal facility or part of a facility where CCRs are placed in or on land and which is not a land treatment facility, a surface impoundment, an underground injection well, a salt dome formation, a salt bed formation, an underground mine, a cave, or a corrective action management unit. For purposes of this part, landfills also include piles, sand and gravel pits, quarries, and/or large scale fill operations. Sites that are excavated so that more coal ash can be used as fill are also considered CCR landfills.

CCR surface impoundment or *impoundment* means a facility or part of a facility which is a natural topographic depression, man-made excavation, or diked area formed primarily of earthen materials (although it may be lined with man-made materials), which is designed to hold an accumulation of CCRs containing free liquids, and which is not

an injection well. Examples of CCR surface impoundments are holding, storage, settling, and aeration pits, ponds, and lagoons. CCR surface impoundments are used to receive CCRs that have been sluiced (flushed or mixed with water to facilitate movement), or wastes from wet air pollution control devices, often in addition to other solid wastes.

* * * * *

Subpart C—[Added and Reserved]

4. Part 257 is amended by adding and reserving Subpart C.

5. Part 257 is amended by adding Subpart D to part 257 to read as follows:

Subpart D—Standards for the Receipt of Coal Combustion Residuals in Landfills and Surface Impoundments

General Provisions

Sec.
257.40 Disposal standards for owners/operators of CCR landfills and CCR surface impoundments.
257.42–257.49 [Reserved]

General Requirements

257.50 Applicability of other regulations.
257.51–257.59 [Reserved]

Location Restrictions

257.60 Placement above the natural water table.
257.61 Wetlands.
257.62 Fault areas.
257.63 Seismic impact zones.
257.64 Unstable areas.
257.65 Closure of existing CCR landfills and surface impoundments.
257.66–257.69 [Reserved]

Design Criteria

257.70 Design criteria for new CCR landfills and lateral expansions.
257.71 Design criteria for existing CCR surface impoundments.
257.72 Design criteria for new CCR surface impoundments and lateral expansions.
257.73–257.79 [Reserved]

Operating Criteria

257.80 Air criteria.
257.81 Run-on and run-off controls.
257.82 Surface water requirements.
257.83 Surface impoundment inspection requirements.
257.84 Recordkeeping requirements.
257.85–257.89 [Reserved]

Groundwater Monitoring and Corrective Action

257.90 Applicability.
257.91 Groundwater monitoring systems.
257.92 [Reserved]
257.93 Groundwater sampling and analysis requirements.
257.94 Detection monitoring program.
257.95 Assessment monitoring program.
257.96 Assessment of corrective measures.
257.97 Selection of remedy.
257.98 Implementation of the corrective action program.
257.99 [Reserved]

Closure and Post-Closure Care

257.100 Closure criteria.
257.101 Post-closure care requirements.
257.102–257.109 [Reserved]

Subpart D—Standards for the Receipt of Coal Combustion Residuals in Landfills and Surface Impoundments

General Provisions

§ 257.40 Disposal standards for owners/operators of CCR landfills and CCR surface impoundments.

(a) *Applicability.* (1) The requirements of this subpart apply to owners or operators of CCR landfills and CCR surface impoundments. Any CCR landfill and surface impoundment continues to be subject to the requirements in §§ 257.3–1, 257.3–2, and 257.3–3.

(2) Except as otherwise specified in this Subpart, all of the requirements in this Subpart are applicable [date 180 days after the effective date of the final rule].

(b) *Definitions.* As used in this subpart:

Acre-foot means the volume of one acre of surface area to a depth of one foot.

Active life means the period of operation beginning with the initial placement of CCRs in the landfill or surface impoundment and ending at completion of closure activities in accordance with § 257.110.

Aquifer means a geological formation, group of formations, or portion of a formation capable of yielding significant quantities of groundwater to wells.

Area-capacity curves means graphic curves which readily show the reservoir water surface area, in acres, at different elevations from the bottom of the reservoir to the maximum water surface, and the capacity or volume, in acre-feet, of the water contained in the reservoir at various elevations.

Coal Combustion Residuals (CCRs) means fly ash, bottom ash, boiler slag, and flue gas desulfurization materials. CCRs are also known as coal combustion wastes (CCWs) and fossil fuel combustion (FFC) wastes.

CCR landfill means a disposal facility or part of a facility where CCRs are placed in or on land and which is not a land treatment facility, a surface impoundment, an underground injection well, a salt dome formation, a salt bed formation, an underground mine, a cave, or a corrective action management unit. For purposes of this subpart, landfills also include piles, sand and gravel pits, quarries, and/or large scale fill operations. Sites that are excavated so that more coal ash can be used as fill are also considered CCR landfills.

CCR surface impoundment or *impoundment* means a facility or part of a facility which is a natural topographic depression, man-made excavation, or diked area formed primarily of earthen materials (although it may be lined with man-made materials), which is designed to hold an accumulation of CCRs containing free liquids, and which is not an injection well. Examples of CCR surface impoundments are holding, storage, settling, and aeration pits, ponds, and lagoons. CCR surface impoundments are used to receive CCRs that have been sluiced (flushed or mixed with water to facilitate movement), or wastes from wet air pollution control devices, often in addition to other solid wastes.

Existing CCR landfill means a CCR landfill which was in operation on, or for which construction commenced prior to [the effective date of the final rule]. A CCR landfill has commenced construction if the owner or operator has obtained the Federal, State and local approvals or permits necessary to begin physical construction; and either:

(1) A continuous on-site, physical construction program has begun; or

(2) The owner or operator has entered into contractual obligations—which cannot be cancelled or modified without substantial loss—for physical construction of the CCR landfill to be completed within a reasonable time.

Existing CCR surface impoundment means a surface impoundment which was in operation on, or for which construction commenced prior to [the effective date of the final rule]. A CCR surface impoundment has commenced construction if the owner or operator has obtained the Federal, State and local approvals or permits necessary to begin physical construction; and either

(1) A continuous on-site, physical construction program has begun; or

(2) The owner or operator has entered into contractual obligations—which can not be cancelled or modified without substantial loss—for physical construction of the CCR surface impoundment to be completed within a reasonable time.

Facility means all contiguous land and structures, other appurtenances, and improvements on the land used for the disposal of CCRs.

Factor of safety (Safety factor) means the ratio of the forces tending to resist the failure of a structure to the forces tending to cause such failure as determined by accepted engineering practice.

Freeboard means the vertical distance between the slurry or liquid elevation in an impoundment and the lowest point on the crest of the impoundment embankment.

Groundwater means water below the land surface in a zone of saturation.

Hazard potential classification means the possible adverse incremental consequences that result from the release of water or stored contents due to failure of a dam (or impoundment) or mis-operation of the dam or appurtenances. (Note: The Hazard Potential Classification System for Dams was developed by the U.S. Army Corps of Engineers for the National Inventory of Dams.)

(1) *High hazard potential surface impoundment* means a surface impoundment where failure or mis-operation will probably cause loss of human life.

(2) *Significant hazard potential surface impoundment* means a surface impoundment where failure or mis-operation results in no probable loss of human life, but can cause economic loss, environmental damage, disruption of lifeline facilities, or impact other concerns.

(3) *Low hazard potential surface impoundment* means a surface impoundment where failure or mis-operation results in no probable loss of human life and low economic and/or environmental losses. Losses are principally limited to the surface impoundment owner's property.

Independent registered professional engineer or hydrologist means a scientist or engineer who is not an employee of the owner or operator of a CCR landfill or surface impoundment who has received a baccalaureate or post-graduate degree in the natural sciences or engineering and has sufficient training and experience in groundwater hydrology and related fields as may be demonstrated by state registration, professional certifications, or completion of accredited university programs that enable that individual to make sound professional judgments regarding the technical information for which a certification under this subpart is necessary.

Lateral expansion means a horizontal expansion of the waste boundaries of an existing CCR landfill, or existing CCR surface impoundment made after [the effective date of the final rule].

New CCR landfill means a CCR landfill in which there is placement of CCRs without the presence of free liquids, which began operation, or for which the construction commenced after [the effective date of the final rule].

New CCR surface impoundment means a CCR surface impoundment from which there is placement of CCRs with the presence of free liquids, which began operation, or for which the construction commenced after [the effective date of the final rule].

Operator means the person(s) responsible for the overall operation of a facility.

Owner means the person(s) who owns a facility or part of a facility.

Probable maximum precipitation means the value for a particular area which represents an envelopment of depth-duration-area rainfall relations for all storm types affecting that area adjusted meteorologically to maximum conditions.

Recognized and generally accepted good engineering practices means engineering maintenance or operation activities based on established codes, standards, published technical reports, recommended practice, or similar document. Such practices detail generally approved ways to perform specific engineering, inspection, or mechanical integrity activities.

Representative sample means a sample of a universe or whole (*e.g.,* waste pile, lagoon, groundwater) which can be expected to exhibit the average properties of the universe or whole.

Run-off means any rainwater, leachate, or other liquid that drains over land from any part of a CCR landfill or surface impoundment.

Run-on means any rainwater, leachate, or other liquid that drains over land onto any part of a CCR landfill or surface impoundment.

Sand and gravel pit or quarry means an excavation for the commercial extraction of aggregate for use in construction projects.

State means any of the several States, the District of Columbia, the Commonwealth of Puerto Rico, the Virgin Islands, Guam, American Samoa, and the Commonwealth of the Northern Mariana Islands.

Surface water means all water naturally open to the atmosphere (rivers, lakes, reservoirs, ponds, streams, impoundments, seas, estuaries, etc.).

Uppermost aquifer means the geologic formation nearest the natural ground surface that is an aquifer, as well as lower aquifers that are hydraulically interconnected with this aquifer within the facility's property boundary.

Waste boundary means a vertical surface located at the hydraulically downgradient limit of the CCR landfill or CCR surface impoundment, or lateral expansion. The vertical surface extends down into the uppermost aquifer.

§§ 257.42–257.49 [Reserved]

General Requirements

§ 257.50 Applicability of other regulations.

(a) The owner or operator of a CCR landfill or CCR surface impoundment must comply with any other applicable federal, state, tribal, or local laws or other requirements.

§§ 257.51–257.59 [Reserved]

Location Restrictions

§ 257.60 Placement above the natural water table.

(a) New CCR landfills and new CCR surface impoundments and lateral expansions must be constructed with a base that is located a minimum of two feet above the upper limit of the natural water table.

(b) For purposes of this section, natural water table means the natural level at which water stands in a shallow well open along its length and penetrating the surficial deposits just deeply enough to encounter standing water at the bottom. This level is uninfluenced by groundwater pumping or other engineered activities.

§ 257.61 Wetlands.

(a) New CCR landfills, new CCR surface impoundments, and lateral expansions shall not be located in wetlands, unless the owner or operator can make the following demonstrations, certified by an independent registered professional engineer or hydrologist. The owner or operator must place the demonstrations in the operating record and the owner's or operator's publicly accessible internet site, and notify the state of this action.

(1) Where applicable under section 404 of the Clean Water Act or applicable state wetlands laws, the presumption that a practicable alternative to the proposed landfill, surface impoundment, or lateral expansion is available which does not involve wetlands is clearly rebutted; and

(2) The construction and operation of the new CCR landfill, new CCR surface impoundment, or lateral expansion will not:

(i) Cause or contribute to violations of any applicable state water quality standard,

(ii) Violate any applicable toxic effluent standard or prohibition under Section 307 of the Clean Water Act;

(iii) Jeopardize the continued existence of endangered or threatened species or result in the destruction or adverse modification of a critical habitat, protected under the Endangered Species Act of 1973; and

(iv) Violate any requirement under the Marine Protection, Research, and Sanctuaries Act of 1972 for the protection of a marine sanctuary; and

(3) The new CCR landfill, new CCR surface impoundment, or lateral expansion will not cause or contribute to significant degradation of wetlands. The owner or operator must demonstrate the integrity of the new CCR landfill, new CCR surface impoundment, or lateral expansion and its ability to protect ecological resources by addressing the following factors:

(i) Erosion, stability, and migration potential of native wetland soils, muds and deposits used to support the new CCR landfill, new CCR surface impoundment, or lateral expansion;

(ii) Erosion, stability, and migration potential of dredged and fill materials used to support the landfill or surface impoundment.

(iii) The volume and chemical nature of the CCRs.

(iv) Impacts on fish, wildlife, and other aquatic resources and their habitat from release of CCRs.

(v) The potential effects of catastrophic release of CCRs to the wetland and the resulting impacts on the environment; and

(vi) Any additional factors, as necessary, to demonstrate that ecological resources in the wetland are sufficiently protected; and

(4) To the extent required under section 404 of the Clean Water Act or applicable state wetlands laws, steps have been taken to attempt to achieve no net loss of wetlands (as defined by acreage and function) by first avoiding impacts to wetlands to the maximum extent practicable as required by paragraph (a)(1) of this section, then minimizing unavoidable impacts to the maximum extent practicable, and finally offsetting remaining unavoidable wetland impacts through all appropriate and practicable compensatory mitigation actions (*e.g.,* restoration of existing degraded wetlands or creation of man-made wetlands); and

(5) Sufficient information is available to make a reasonable determination with respect to these demonstrations.

(b) For purposes of this section, *wetlands* means those areas defined in 40 CFR 232.2.

§ 257.62 Fault areas.

(a) New CCR landfills, new CCR surface impoundments and lateral expansions shall not be located within 200 feet (60 meters) of a fault that has had displacement in Holocene time unless the owner or operator demonstrates that an alternative setback distance of less than 200 feet (60 meters) will prevent damage to the structural integrity of the new CCR landfill, new CCR surface impoundment and lateral expansion and will be protective of human health and the environment. The demonstration must be certified by an independent registered professional engineer and the owner or operator must notify the state that the demonstration has been placed in the operating record and on the owner's or operator's publicly accessible Internet site.

(b) For the purposes of this section:

(1) *Fault* means a fracture or a zone of fractures in any material along which strata on one side have been displaced with respect to that on the other side.

(2) *Displacement* means the relative movement of any two sides of a fault measured in any direction.

(3) *Holocene* means the most recent epoch of the Quaternary period, extending from the end of the Pleistocene Epoch to the present.

§ 257.63 Seismic impact zones.

(a) New CCR landfills, new CCR surface impoundments and lateral expansions shall not be located in seismic impact zones, unless the owner or operator demonstrates that all containment structures, including liners, leachate collection systems, and surface water control systems, are designed to resist the maximum horizontal acceleration in lithified earth material for the site. The demonstration must be certified by an independent registered professional engineer and the owner or operator must notify the state that the demonstration has been placed in the operating record and on the owner's or operator' publicly accessible internet site.

(b) For the purposes of this section:

(1) *Seismic impact zone* means an area with a ten percent or greater probability that the maximum horizontal acceleration in lithified earth material, expressed as a percentage of the earth's gravitational pull (g), will exceed 0.10g in 250 years.

(2) *Maximum horizontal acceleration in lithified earth material* means the maximum expected horizontal acceleration depicted on a seismic hazard map, with a 98 percent or greater probability that the acceleration will not be exceeded in 50 years, or the maximum expected horizontal acceleration based on a site-specific seismic risk assessment.

(3) *Lithified earth material* means all rock, including all naturally occurring and naturally formed aggregates or masses of minerals or small particles of older rock that formed by crystallization of magma or by induration of loose sediments. This term does not include man-made materials, such as fill, concrete, and asphalt, or unconsolidated earth materials, soil, or regolith lying at or near the earth surface.

§ 257.64 Unstable areas.

(a) Owners or operators of new or existing CCR landfills, new or existing CCR surface impoundments and lateral expansions located in an unstable area must demonstrate that engineering measures have been incorporated into the landfill, surface impoundment, or lateral expansion design to ensure that the integrity of the structural components of the landfill or surface impoundment will not be disrupted. The demonstration must be certified by an independent registered professional engineer. The owner or operator must notify the state that the demonstration has been placed in the operating record and on the owner's or operator's publicly accessible internet site. The owner or operator must consider the following factors, at a minimum, when determining whether an area is unstable:

(1) On-site or local soil conditions that may result in significant differential settling;

(2) On-site or local geologic or geomorphologic features; and

(3) On-site or local human-made features or events (both surface and subsurface).

(b) For purposes of this section:

(1) *Unstable area* means a location that is susceptible to natural or human-induced events or forces capable of impairing the integrity of some or all of the CCR landfill or CCR surface impoundment or lateral expansion structural components responsible for preventing releases from a landfill or surface impoundment. Unstable areas can include poor foundation conditions, areas susceptible to mass movements, and Karst terrains.

(2) *Structural components* means liners, leachate collection systems, final covers, run-on/run-off systems, and any other component used in the construction and operation of the CCR landfill or CCR surface impoundment or lateral expansion that is necessary for protection of human health and the environment.

(3) *Poor foundation conditions* means those areas where features exist which indicate that a natural or man-induced event may result in inadequate foundation support for the structural components of a CCR landfill, CCR surface impoundment, or lateral expansion.

(4) *Areas susceptible to mass movement* means those areas of

influence (*i.e.,* areas characterized as having an active or substantial possibility of mass movement) where the movement of earth material at, beneath, or adjacent to the CCR landfill, CCR surface impoundment, or lateral expansion, because of natural or man-induced events, results in the downslope transport of soil and rock material by means of gravitational influence. Areas of mass movement include, but are not limited to, landslides, avalanches, debris slides and flows, soil fluction, block sliding, and rock fall.

(5) *Karst terranes* means areas where karst topography, with its characteristic surface and subterranean features, has developed as a result of dissolution of limestone, dolomite, or other soluble rock. Characteristic physiographic features present in karst terranes include, but are not limited to, sinkholes, sinking streams, caves, large springs, and blind valleys.

§ 257.65 Closure of existing CCR landfills and surface impoundments.

(a) Existing CCR landfills and surface impoundments that cannot make the demonstration specified in § 257.64 (a) pertaining to unstable areas, must close by [date five years after the effective date of the final rule], in accordance with § 257.100 and conduct post-closure activities in accordance with § 257.101.

(b) The deadline for closure required by paragraph (a) of this section may be extended up to two years if the owner or operator can demonstrate that:

(1) There is no available alternative disposal capacity;

(2) There is no immediate threat to human health and the environment.

(c) The demonstration in paragraph (b) of this section must be certified by an independent registered professional engineer or hydrologist.

(d) The owner or operator must place the demonstration in paragraph (b) of this section in the operating record and on the owner's or operator's publicly accessible internet site and notify the state that this action was taken.

§§ 257.66–257.69 [Reserved]

Design Criteria

§ 257.70 Design criteria for new CCR landfills and lateral expansions.

(a) New CCR landfills and lateral expansions of CCR landfills shall be constructed:

(1) With a composite liner, as defined in paragraph (a)(2) of this section and a leachate collection system that is designed and constructed to maintain less than a 30-cm depth of leachate over the liner. The design of the composite liner and leachate collection system must be prepared by, or under the direction of, and certified by an independent registered, professional engineer.

(2) For purposes of this section, *composite liner* means a system consisting of two components; the upper component must consist of a minimum 30-mil flexible membrane liner (FML), and the lower component must consist of at least a two-foot layer of compacted soil with a hydraulic conductivity of no more than 1×10^{-7} cm/sec. FML components consisting of high density polyethylene (HDPE) shall be at least 60-mil thick. The FML component must be installed in direct and uniform contact with the compacted soil component.

(3) For purpose of this section, *hydraulic conductivity* means the rate at which water can move through a permeable medium. (*i.e.,* the coefficient of permeability).

(b) [Reserved]

§ 257.71 Design criteria for existing CCR surface impoundments.

(a) No later than [five years after effective date of final rule] existing CCR surface impoundments shall be constructed:

(1) With a composite liner, as defined in paragraph (a)(2) of this section and a leachate collection system between the upper and lower components of the composite liner. The design shall be in accordance with a design prepared by, or under the direction of, and certified by an independent registered professional engineer.

(2) For purposes of this section, *composite liner* means a system consisting of two components; the upper component must consist of a minimum 30-mil flexible membrane line (FML), and the lower component must consist of at least two-foot layer of compacted soil with a hydraulic conductivity of no more than 1×10^{-7} cm/sec. FML components consisting of high density polyethylene (HDPE) shall be at least 60-mil thick. The FML component must be installed in direct and uniform contact with the compacted soil component.

(3) For purposes of this section, *hydraulic conductivity* means the rate at which water can move through a permeable medium (*i.e.,* the coefficient of permeability).

(b) The owner or operator of an existing CCR surface impoundment shall place in the operating record and on the owner's or operator's publicly accessible internet site, and provide to the state a history of construction, and any record or knowledge of structural instability if the existing surface impoundment can:

(1) Impound CCRs to an elevation of five feet or more above the upstream toe of the structure and can have a storage volume of 20 acre-feet or more; or

(2) Impound CCRs to an elevation of 20 feet or more above the upstream toe of the structure.

(c) For purposes of this subpart, *upstream toe* means, for an embankment dam, the junction of the upstream slope of the dam with the ground surface. (Federal Guidelines for Dam Safety, Glossary of Terms, Federal Emergency Management Agency, April 2004.)

(d) The history of construction specified in paragraph (b) of this section shall contain, at a minimum, the following information as may be available:

(1) The name and address of the persons owning or operating the CCR surface impoundment; the name associated with the CCR surface impoundment; and the identification number of the CCR surface impoundment if one has been assigned by the state.

(2) The location of the CCR surface impoundment indicated on the most recent USGS 7½ minute or 15 minute topographic quadrangle map, or a topographic map of equivalent scale if a USGS map is not available.

(3) A statement of the purpose for which the CCR surface impoundment is being used.

(4) The name and size in acres of the watershed affecting the CCR surface impoundment.

(5) A description of the physical and engineering properties of the foundation materials on which the CCR surface impoundment is constructed.

(6) A statement of the type, size, range, and physical and engineering properties of the materials used in constructing each zone or stage of the CCR surface impoundment; the method of site preparation and construction of each zone of the CCR surface impoundment; and the approximate dates of construction, and each successive stage of construction of the CCR surface impoundment.

(7) At a scale not to exceed 1 inch = 100 feet, detailed dimensional drawings of the CCR surface impoundment, including a plan view and cross sections of the length and width of the CCR surface impoundment, showing all zones, foundation improvements, drainage provisions, spillways, diversion ditches, outlets, instrument locations, and slope protection, in addition to the measurement of the minimum vertical distance between the crest of the CCR surface impoundment

and the reservoir surface at present and under design storm conditions, CCR slurry level and CCR waste water level, and any identifiable natural or manmade features which could affect operation of the CCR surface impoundment.

(8) A description of the type and purpose of existing or proposed instrumentation.

(9) Graphs showing area-capacity curves.

(10) The hazard potential classification for which the facility is designed and a detailed explanation of the basis for this classification.

(11) A description of the spillway and diversion design features and capacities and calculations used in their determination.

(12) The computed minimum factor of safety for slope stability of the CCR retaining structure(s) and the analyses used in their determinations.

(13) A certification by an independent registered professional engineer that the design of the CCR surface impoundment is in accordance with current, prudent engineering practices for the maximum volume of CCR slurry and CCR waste water which can be impounded therein and for the passage of runoff from the design storm which exceeds the capacity of the CCR surface impoundment; or, in lieu of the certification, a report indicating what additional investigations, analyses, or improvement work are necessary before such a certification can be made by an independent registered professional engineer, including what provisions have been made to carry out such work in addition to a schedule for completion of such work. Upon completion of such work, the owner or operator shall place the certification in the operating record and on the owner's or operator's publicly accessible internet site and provide to the state notice of such certification.

(14) The construction specifications and provisions for surveillance, maintenance, and repair of the CCR surface impoundment.

(15) General provisions for closure.

(e) A permanent identification marker, at least six feet high and showing the identification number of the existing CCR surface impoundment, if one has been assigned by the state, the name associated with the CCR surface impoundment and the name of the person owning or operating the structure, shall be located on or immediately adjacent to each existing CCR surface impoundment. This requirement becomes effective [date 60 days after the effective date of the final rule].

(f) For existing CCR surface impoundments classified as having a high or significant hazard potential, as certified by an independent registered professional engineer, the owner or operator shall develop and maintain in the operating record, and on the owner's or operator' publicly accessible internet site, an Emergency Action Plan which: defines responsible persons and the actions to be taken in the event of a dam-safety emergency; provides contact information for emergency responders; includes a map which delineates the downstream area which would be affected in the event of a dam failure; and includes provisions for an annual face-to-face meeting or exercise between representatives of the facility owner and the local emergency responders.

(g) CCR surface impoundments shall be dredged of CCRs and lined with a composite liner system, as defined in paragraph (d)(2) of this section, by [date five years after the effective date of the final rule] or closed in accordance with § 257.100.

§ 257.72 Design criteria for new CCR surface impoundments and lateral expansions.

(a) New CCR surface impoundments and lateral expansions of CCR landfills or surface impoundments shall be constructed:

(1) With a composite liner, as defined in paragraph (a)(2) of this section and a leachate collection system between the upper and lower components of the composite liner. The design of the composite liner and leachate collection system must be prepared by, or under the direction of, and certified by an independent registered, professional engineer.

(2) For purposes of this section, *composite liner* means a system consisting of two components; the upper component must consist of a minimum 30-mil flexible membrane liner (FML), and the lower component must consist of at least a two-foot layer of compacted soil with a hydraulic conductivity of no more than 1×10^{-7} cm/sec. FML components consisting of high density polyethylene (HDPE) shall be at least 60-mil thick. The FML component must be installed in direct and uniform contact with the compacted soil component.

(3) For purpose of this section, *hydraulic conductivity* means the rate at which water can move through a permeable medium (*i.e.,* the coefficient of permeability).

(b) Plans for the design, construction, and maintenance of new CCR surface impoundments and lateral expansions shall be placed in the operating record and be submitted to the state upon certification by an independent registered professional engineer, and a notice shall be placed on the owner's or operator's publicly accessible internet site that such plans have been placed in the operating record and submitted to the state, if such proposed surface impoundment or lateral expansion can:

(1) Impound CCRs to an elevation of five feet or more above the upstream toe of the structure and can have a storage volume of 20 acre-feet or more; or

(2) Impound CCRs to an elevation of 20 feet or more above the upstream toe of the structure.

(c) A permanent identification marker, at least six feet high and showing the identification number of the CCR surface impoundment, if one has been assigned by the state, the name associated with the CCR surface impoundment and the name of the person owning or operating the structure, shall be located on or immediately adjacent to each CCR surface impoundment. This requirement becomes effective [date 60 days after the effective date of the final rule].

(d) The plan specified in paragraph (b) of this section, shall contain at a minimum the following information:

(1) The name and address of the persons owning or operating the CCR surface impoundment; the name associated with the CCR surface impoundment; and the identification number of the CCR surface impoundment if one has been assigned by the state.

(2) The location of the CCR surface impoundment indicated on the most recent USGS 7½ minute or 15 minute topographic quadrangle map, or a topographic map of equivalent scale if a USGS map is not available.

(3) A statement of the purpose for which the CCR surface impoundment is being used.

(4) The name and size in acres of the watershed affecting the CCR surface impoundment.

(5) A description of the physical and engineering properties of the foundation materials on which the CCR surface impoundment is constructed.

(6) A statement of the type, size, range, and physical and engineering properties of the materials used in constructing each zone or stage of the CCR surface impoundment; the method of site preparation and construction of each zone of the CCR surface impoundment; and the approximate dates of construction, and each successive stage of construction of the CCR surface impoundment.

(7) At a scale not to exceed 1 inch = 100 feet, detailed dimensional drawings

of the CCR surface impoundment, including a plan view and cross sections of the length and width of the CCR surface impoundment, showing all zones, foundation improvements, drainage provisions, spillways, diversion ditches, outlets, instrument locations, and slope protection, in addition to the measurement of the minimum vertical distance between the crest of the CCR surface impoundment and the reservoir surface at present and under design storm conditions, CCR slurry level and CCR waste water level, and any identifiable natural or manmade features which could affect operation of the CCR surface impoundment.

(8) A description of the type and purpose of existing or proposed instrumentation.

(9) Graphs showing area-capacity curves.

(10) The hazard potential classification for which the facility is designed and a detailed explanation of the basis for this classification.

(11) A description of the spillway and diversion design features and capacities and calculations used in their determination.

(12) The computed minimum factor of safety for slope stability of the CCR retaining structure(s) and the analyses used in their determinations.

(13) The construction specifications and provisions for surveillance, maintenance, and repair of the CCR surface impoundment.

(14) General provisions for closure.

(15) A certification by an independent registered professional engineer that the design of the CCR surface impoundment is in accordance with generally accepted engineering standards for the maximum volume of CCR slurry and CCR waste water which can be impounded therein and for the passage of runoff from the design storm which exceeds the capacity of the CCR surface impoundment. The owner or operator shall place the certification in the operating record and on the owner's or operator's publicly accessible internet site and notify the state that these actions have been taken.

(e) Any changes or modifications to the plans for CCR surface impoundments shall be certified by an independent registered professional engineer and provided to the state prior to the initiation of such changes or modifications. The certification required in this paragraph shall be placed on the owner's or operator's publicly accessible internet site.

(f) For CCR surface impoundments classified by as having a high or significant hazard potential, as certified by an independent registered professional engineer, the owner or operator shall develop and maintain in the operating record and on the owner's or operator's publicly accessible internet site, an Emergency Action Plan which: Defines responsible persons and the actions to be taken in the event of a dam-safety emergency; provides contact information for emergency responders; includes a map which delineates the downstream area which would be affected in the event of a dam failure; and includes provisions for an annual face-to-face meeting or exercise between representatives of the facility owner and the local emergency responders.

§§ 257.73–257.79 [Reserved]

Operating Criteria

§ 257.80 Air criteria.

(a) CCR surface impoundments and CCR landfills must be managed in a manner that fugitive dusts do not exceed 35 $\mu g/m^3$, unless some alternative standard has been established pursuant to applicable requirements developed under a State Implementation Plan (SIP) approved or promulgated by the Administrator pursuant to section 110 of the Clean Air Act, as amended.

(b) CCR surface impoundments must be managed to control wind dispersal of dusts, consistent with the standard in paragraph (a) of this section.

(c) CCR landfills must be managed to control wind dispersal of dusts, consistent with the standard in paragraph (a). CCRs must be emplaced as conditioned CCRs as defied in paragraph (d) of this section.

(d) For purposes of this section, conditioning means wetting CCRs with water to a moisture content that will prevent wind dispersal, but will not result in free liquids.

(e) Documentation of the measures taken to comply with the requirements of this section must be certified by an independent registered professional engineer and notification provided to the state that the documentation has been placed in the operating record and on the owner's or operator's publicly accessible internet site.

§ 257.81 Run-on and run-off controls.

(a) Owners or operators of all CCR landfills and surface impoundments must design, construct, and maintain:

(1) A run-on control system to prevent flow onto the active portion of the CCR landfill or surface impoundment during the peak discharge from a 24-hour, 25-year storm;

(2) A run-off control system from the active portion of the CCR landfill or surface impoundment to collect and control at least the water volume resulting from a 24-hour, 25-year storm.

(b) The design required in paragraph (a) of this section must be certified by an independent registered professional engineer that the design meets the requirements of this section. The owner or operator must notify the state that the design has been placed in the operating record and on the owner's or operator's publicly accessible internet site.

(c) The owner or operator must prepare a report, certified by an independent registered professional engineer, that documents how relevant calculations were made, and how the control systems meet the requirements of this subpart and notify the state that the report has been placed in the operating record and made available to the public on the owner's or operator's publicly accessible internet site.

(d) Run-off from the active portion of the CCR landfill or surface impoundment must be handled in accordance with § 257.3–3.

§ 257.82 Surface water requirements.

(a) CCR landfills and surface impoundments shall not:

(1) Cause a discharge of pollutants into waters of the United States, including wetlands, that violates any requirements of the Clean Water Act, including, but not limited to, the National Pollutant Discharge Elimination System (NPDES) requirements, pursuant to section 402 of the Clean Water Act.

(2) Cause the discharge of a nonpoint source of pollution to waters of the United States, including wetlands, that violates any requirement of an area-wide or State-wide water quality management plan that has been approved under section 208 or 319 of the Clean Water Act, as amended.

(b) [Reserved]

§ 257.83 Surface impoundment inspection requirements.

(a) All existing CCR surface impoundments shall be examined as follows:

(1) At intervals not exceeding 7 days for appearances of structural weakness and other hazardous conditions.

(2) At intervals not exceeding 7 days all instruments shall be monitored.

(3) All inspections required by paragraphs (a)(1) and (2) of this section shall be performed by a qualified person, as defined in paragraph (e) of this section, designated by the person owning or operating the CCR surface impoundment.

(4) All existing CCR surface impoundments shall be inspected

annually by an independent registered professional engineer to assure that the design, operation, and maintenance of the surface impoundment is in accordance with generally accepted engineering standards. The owner or operator must notify the state that a certification by the independent registered professional engineer that the design, operation, and maintenance of the surface impoundment is in accordance with generally accepted engineering standards has been placed in the operating record and on the owner's or operator's publicly accessible internet site.

(b) When a potentially hazardous condition develops, the person owning or operating the CCR surface impoundment shall immediately:

(1) Take action to eliminate the potentially hazardous condition;

(2) Notify potentially affected persons and state and local first responders;

(3) Notify and prepare to evacuate, if necessary, all personnel from the owner or operator's property which may be affected by the potentially hazardous conditions; and

(4) Direct a qualified person to monitor all instruments and examine the structure at least once every eight hours, or more often as required by an authorized representative of the state.

(c) After each inspection and instrumentation monitoring referred to in paragraphs (a) and (b) of this section, each qualified person who conducted all or any part of the inspection or instrumentation monitoring shall promptly record the results of such inspection or instrumentation monitoring in a book which shall be available in the operating record and such qualified person shall also promptly report the results of the inspection or monitoring to the state. A report of each inspection and instrumentation monitoring shall also be placed on the owner's or operator's publicly accessible internet site.

(d) All inspection and instrumentation monitoring reports recorded in accordance with paragraph (c) of this section shall include a report of the action taken to abate hazardous conditions and shall be promptly signed by the person designated by the owner or operator as responsible for health and safety at the owner or operator's facility.

(e) The qualified person or persons referred to in this section shall be trained to recognize specific signs of structural instability and other hazardous conditions by visual observation and, if applicable, to monitor instrumentation.

§ 257.84 Recordkeeping requirements.

(a) The owner or operator of a CCR landfill or surface impoundment must record and retain near the facility in an operating record and on the owner's or operator's publicly accessible internet site, all records, reports, studies or other documentation required to demonstrate compliance with §§ 257.60 through 257.83 and 257.90 through 257.101.

(b) Except as provided in paragraph (c) of this section, every twelfth month following [the effective date of the final rule] for CCR surface impoundments addressed under § 257.71, and every twelfth month following the date of the initial plan for the design (including lateral expansions), construction, and maintenance of the surface impoundments addressed under § 257.72(b), the owner or operator of such CCR surface impoundments that have not been closed in accordance with § 257.100 shall place in the operating record and on the owner's or operator's publicly accessible internet site, a report containing the following information. The owner or operator shall notify the state that the report has been placed in the operating record and on the owner's or operator's publicly accessible internet site.

(1) Changes in the geometry of the impounding structure for the reporting period.

(2) Location and type of installed instruments and the maximum and minimum recorded readings of each instrument for the reporting period.

(3) The minimum, maximum, and present depth and elevation of the impounded water, sediment, or slurry for the reporting period.

(4) Storage capacity of the impounding structure.

(5) The volume of the impounded water, sediment, or slurry at the end of the reporting period.

(6) Any other change which may have affected the stability or operation of the impounding structure that has occurred during the reporting period.

(7) A certification by an independent registered professional engineer that all construction, operation, and maintenance were in accordance with the approved plan.

(c) A report is not required under this section when the owner or operator provides the state with a certification by an independent registered professional engineer that there have been no changes under paragraphs (b)(1) through (b)(6) of this section to the surface impoundment. However, a report containing the information set out in paragraph (b) of this section shall be placed in the operating record and on the owner's or operator's publicly accessible internet site and notification submitted to the state at least every 5 years.

§§ 257.85–257.89 [Reserved]

Groundwater Monitoring and Corrective Action

§ 257.90 Applicability.

(a) Owners and operators of all CCR landfills, surface impoundments subject to this subpart must comply with the groundwater monitoring requirements according to the following schedule:

(1) Existing CCR landfills and surface impoundments must comply with the groundwater monitoring requirements specified in §§ 257.91 through 257.95 within [one year after the effective date of the final rule];

(2) New CCR landfills and surface impoundments must comply with the groundwater monitoring requirements specified in §§ 257.91 through 257.95 before CCR can be disposed of in the CCR landfill or surface impoundment.

(b) The owner or operator must notify the state once each year throughout the active life and post-closure care period that the CCR landfill or surface impoundment is in compliance with the groundwater monitoring and corrective action provisions of this subpart.

(c) Once established at a CCR landfill or surface impoundment, groundwater monitoring shall be conducted throughout the active life and post-closure care period of that CCR landfill or surface impoundment as specified in § 257.101.

§ 257.91 Groundwater monitoring systems.

(a) A groundwater monitoring system must be installed that consists of a sufficient number of wells, installed at appropriate locations and depths, to yield groundwater samples from the uppermost aquifer (as defined in § 257.41) that:

(1) Represent the quality of background groundwater that has not been affected by leakage from a CCR landfill or surface impoundment. A determination of background quality may include sampling of wells that are not hydraulically upgradient of the CCR management area where:

(i) Hydrogeologic conditions do not allow the owner or operator to determine what wells are hydraulically upgradient; or

(ii) Sampling at other wells will provide an indication of background groundwater quality that is as representative or more representative than that provided by the upgradient wells; and

(2) Represent the quality of groundwater passing the waste

boundary. The downgradient monitoring system must be installed at the waste boundary that ensures detection of groundwater contamination in the uppermost aquifer.

(b) The groundwater monitoring system must include at a minimum one up gradient and three downgradient wells.

(c) A multiunit groundwater monitoring system may be installed instead of separate groundwater monitoring systems for each CCR landfill or surface impoundment when the facility has several units, provided the multi-unit groundwater monitoring system meets the requirement of § 257.91(a) and will be as protective of human health and the environment as individual monitoring systems for each CCR landfill or surface impoundment, based on the following factors:

(1) Number, spacing, and orientation of the CCR landfill or surface impoundment;

(2) Hydrogeologic setting;

(3) Site history;

(4) Engineering design of the CCR landfill or surface impoundment; and

(d) Monitoring wells must be cased in a manner that maintains the integrity of the monitoring well bore hole. This casing must be screened or perforated and packed with gravel or sand, where necessary, to enable collection of groundwater samples. The annular space (*i.e.,* the space between the bore hole and well casing) above the sampling depth must be sealed to prevent contamination of samples and the groundwater.

(1) The owner or operator of the CCR landfill or surface impoundment must notify the state that the design, installation, development, and decommission of any monitoring wells, piezometers and other measurement, sampling, and analytical devices documentation has been placed in the operating record and on the owner's or operator's publicly accessible internet site; and

(2) The monitoring wells, piezometers, and other measurement, sampling, and analytical devices must be operated and maintained so that they perform to design specifications throughout the life of the monitoring program.

(e) The number, spacing, and depths of monitoring systems shall be:

(1) Determined based upon site-specific technical information that must include thorough characterization of:

(i) Aquifer thickness, groundwater flow rate, groundwater flow direction including seasonal and temporal fluctuations in groundwater flow; and

(ii) Saturated and unsaturated geologic units and fill materials overlying the uppermost aquifer, materials comprising the uppermost aquifer, and materials comprising the confining unit defining the lower boundary of the uppermost aquifer; including, but not limited to: thicknesses, stratigraphy, lithology, hydraulic conductivities, porosities and effective porosities.

(2) Certified by an independent registered professional engineer or hydrologist. Within 14 days of this certification, the owner or operator must notify the state that the certification has been placed in the operating record and on the owner's or operator's publicly accessible internet site.

§ 257.92 [Reserved]

§ 257.93 Groundwater sampling and analysis requirements.

(a) The groundwater monitoring program must include consistent sampling and analysis procedures that are designed to ensure monitoring results that provide an accurate representation of groundwater quality at the background and downgradient wells installed in compliance with § 257.91. The owner or operator of the CCR landfill or surface impoundment must notify the State that the sampling and analysis program documentation has been placed in the operating record and on the owner's or operator's publicly accessible internet site and the program must include procedures and techniques for:

(1) Sample collection;

(2) Sample preservation and shipment;

(3) Analytical procedures;

(4) Chain of custody control; and

(5) Quality assurance and quality control.

(b) The groundwater monitoring program must include sampling and analytical methods that are appropriate for groundwater sampling and that accurately measure hazardous constituents and other monitoring parameters in groundwater samples. Groundwater samples shall not be field-filtered prior to laboratory analysis.

(c) The sampling procedures and frequency must be protective of human health and the environment.

(d) Groundwater elevations must be measured in each well immediately prior to purging, each time groundwater is sampled. The owner or operator of the CCR landfill or surface impoundment must determine the rate and direction of groundwater flow each time groundwater is sampled. Groundwater elevations in wells which monitor the same CCR management area must be measured within a period of time short enough to avoid temporal variations in groundwater flow which could preclude accurate determination of groundwater flow rate and direction.

(e) The owner or operator of the CCR landfill or surface impoundment must establish background groundwater quality in a hydraulically upgradient or background well(s) for each of the monitoring parameters or constituents required in the particular groundwater monitoring program that applies to the CCR landfill or surface impoundment, as determined under § 257.94(a) or § 257.95(a). Background groundwater quality may be established at wells that are not located hydraulically upgradient from the CCR landfill or surface impoundment if it meets the requirements of § 257.91(a)(1).

(f) The number of samples collected to establish groundwater quality data must be consistent with the appropriate statistical procedures determined pursuant to paragraph (g) of this section. The sampling procedures shall be those specified under § 257.94(b) for detection monitoring, § 257.95(b) and (c) for assessment monitoring, and § 257.96(b) for corrective action.

(g) The owner or operator of the CCR landfill or surface impoundment must specify in the operating record and on the owner's or operator's publicly accessible Internet site, one of the following statistical methods to be used in evaluating groundwater monitoring data for each hazardous constituent. The statistical test chosen shall be conducted separately for each hazardous constituent in each well.

(1) A parametric analysis of variance (ANOVA) followed by multiple comparison procedures to identify statistically significant evidence of contamination. The method must include estimation and testing of the contrasts between each compliance well's mean and the background mean levels for each constituent.

(2) An analysis of variance (ANOVA) based on ranks followed by multiple comparison procedures to identify statistically significant evidence of contamination. The method must include estimation and testing of the contrasts between each compliance well's median and the background median levels for each constituent.

(3) A tolerance or prediction interval procedure in which an interval for each constituent is established from the distribution of the background data, and the level of each constituent in each compliance well is compared to the upper tolerance or prediction limit.

(4) A control chart approach that gives control limits for each constituent.

(5) Another statistical test method that meets the performance standards of paragraph (h) of this section. The owner or operator of the CCR landfill or surface impoundment must place a justification for this alternative in the operating record and on the owner's or operator's publicly accessible internet site and notify the state of the use of this alternative test. The justification must demonstrate that the alternative method meets the performance standards of paragraph (h) of this section.

(h) Any statistical method chosen under paragraph (g) of this section shall comply with the following performance standards, as appropriate:

(1) The statistical method used to evaluate groundwater monitoring data shall be appropriate for the distribution of chemical parameters or hazardous constituents. If the distribution of the chemical parameters or hazardous constituents is shown by the owner or operator of the CCR landfill or surface impoundment to be inappropriate for a normal theory test, then the data should be transformed or a distribution-free theory test should be used. If the distributions for the constituents differ, more than one statistical method may be needed.

(2) If an individual well comparison procedure is used to compare an individual compliance well constituent concentration with background constituent concentrations or a ground-water protection standard, the test shall be done at a Type I error level no less than 0.01 for each testing period. If a multiple comparison procedure is used, the Type I experiment wise error rate for each testing period shall be no less than 0.05; however, the Type I error of no less than 0.01 for individual well comparisons must be maintained. This performance standard does not apply to tolerance intervals, prediction intervals, or control charts.

(3) If a control chart approach is used to evaluate groundwater monitoring data, the specific type of control chart and its associated parameter values shall be protective of human health and the environment. The parameters shall be determined after considering the number of samples in the background data base, the data distribution, and the range of the concentration values for each constituent of concern.

(4) If a tolerance interval or a predictional interval is used to evaluate groundwater monitoring data, the levels of confidence and, for tolerance intervals, the percentage of the population that the interval must contain, shall be protective of human health and the environment. These parameters shall be determined after considering the number of samples in the background data base, the data distribution, and the range of the concentration values for each constituent of concern.

(5) The statistical method shall account for data below the limit of detection with one or more statistical procedures that are protective of human health and the environment. Any practical quantitation limit (pql) that is used in the statistical method shall be the lowest concentration level that can be reliably achieved within specified limits of precision and accuracy during routine laboratory operating conditions that are available to the facility.

(6) If necessary, the statistical method shall include procedures to control or correct for seasonal and spatial variability as well as temporal correlation in the data.

(i) The owner or operator of the CCR landfill or surface impoundment must determine whether or not there is a statistically significant increase over background values for each parameter or constituent required in the particular groundwater monitoring program that applies to the CCR landfill or surface impoundment, as determined under §§ 257.94(a) or 257.95(a).

(1) In determining whether a statistically significant increase has occurred, the owner or operator must compare the groundwater quality of each parameter or constituent at each monitoring well designated pursuant to § 257.91(a)(2) to the background value of that constituent, according to the statistical procedures and performance standards specified under paragraphs (g) and (h) of this section.

(2) Within a reasonable period of time after completing sampling and analysis, the owner or operator of the CCR landfill or surface impoundment must determine whether there has been a statistically significant increase over background at each monitoring well.

§ 257.94 Detection monitoring program.

(a) Detection monitoring is required at CCR landfills and surface impoundments at all groundwater monitoring wells. At a minimum, a detection monitoring program must include monitoring for the parameters listed in Appendix III to this part.

(b) The monitoring frequency for all parameters listed in Appendix III to this part shall be at least semiannual during the active life of the CCR landfill or surface impoundment (including closure) and the post-closure period. A minimum of four independent samples from each background and downgradient well must be collected and analyzed for the Appendix III parameters during the first semiannual sampling event.

(c) At least one sample from each background and downgradient well must be collected and analyzed during subsequent semiannual sampling events.

(d) If the owner or operator of the CCR landfill or surface impoundment determines, pursuant to § 257.93(g) that there is a statistically significant increase over background for one or more of the parameters listed in Appendix III to this part at any monitoring well at the waste boundary specified under § 257.91(a)(2), the owner or operator:

(1) Must, within 14 days of this finding, place a notice in the operating record and on the owner's or operator's publicly accessible internet site indicating which parameters have shown statistically significant changes from background levels, and notify the state that this notice was placed in the operating record and on the owner's or operator's publicly accessible internet site; and

(2) Must establish an assessment monitoring program meeting the requirements of § 257.95 of this part within 90 days except as provided for in paragraph (c)(3) of this section.

(3) The owner/operator may demonstrate that a source other than the CCR landfill or surface impoundment caused the statistically significant increase or that the statistically significant increase resulted from error in sampling, analysis, statistical evaluation, or natural variation in groundwater quality. A report documenting this demonstration must be certified by an independent registered professional engineer or hydrologist and be placed in the operating record and on the owner's or operator's publicly accessible internet site and the state notified of this finding. If a successful demonstration is made and documented, the owner or operator of the CCR landfill or surface impoundment may continue detection monitoring as specified in this section. If, after 90 days, a successful demonstration is not made, the owner or operator of the CCR landfill or surface impoundment must initiate an assessment monitoring program as required in § 257.95.

§ 257.95 Assessment monitoring program.

(a) Assessment monitoring is required whenever a statistically significant increase over background has been detected for one or more of the

constituents listed in the Appendix III to this part.

(b) Within 90 days of triggering an assessment monitoring program, and annually thereafter, the owner or operator of the CCR landfill or surface impoundment must sample and analyze the groundwater for all constituents identified in Appendix IV to this part. A minimum of one sample from each downgradient well must be collected and analyzed during each sampling event. For any constituent detected in the downgradient wells as a result of the complete Appendix IV analysis, a minimum of four independent samples from each well (background and downgradient) must be collected and analyzed to establish background for the constituents.

(c) After obtaining the results from the initial or subsequent sampling events required in paragraph (b) of this section, the owner or operator of the CCR landfill or surface impoundment must:

(1) Within 14 days, place a notice in the operating record and on the owner's or operator's publicly accessible internet site identifying the Appendix IV constituents that have been detected and notify the state that this notice has been placed in the operating record and on the owner's or operator's publicly accessible internet site;

(2) Within 90 days, and on at least a semiannual basis thereafter, resample all wells specified by § 257.91(a), conduct analyses for all parameters in Appendix III to this part and for those constituents in Appendix IV to this part that are detected in response to paragraph (b) of this section, and record their concentrations in the facility operating record and place the results on the owner's or operator's publicly accessible internet site. At least one sample from each well (background and downgradient) must be collected and analyzed during these sampling events.

(3) Establish background concentrations for any constituents detected pursuant to paragraph (b) or (c)(2) of this section; and

(4) Establish groundwater protection standards for all constituents detected pursuant to paragraph (b) or (c) of this section. The groundwater protection standards shall be established in accordance with paragraphs (g) or (h) of this section.

(d) If the concentrations of all Appendix IV constituents are shown to be at or below background values, using the statistical procedures in § 257.93(g), for two consecutive sampling events, the owner or operator of the CCR landfill or surface impoundment must place that information in the operating record and on the owner's or operator's publicly accessible internet site and notify the state of this finding and may return to detection monitoring.

(e) If the concentrations of any Appendix IV constituents are above background values, but all concentrations are below the groundwater protection standard established under paragraphs (g) or (h) of this section, using the statistical procedures in § 257.93(g), the owner or operator must continue assessment monitoring in accordance with this section.

(f) If one or more Appendix IV constituents are detected at statistically significant levels above the groundwater protection standard established under paragraphs (g) or (h) of this section in any sampling event, the owner or operator must, within 14 days of this finding, place a notice in the operating record and on the owner's or operator's publicly accessible internet site identifying the Appendix IV constituents that have exceeded the groundwater protection standard and notify the state and all appropriate local government officials that the notice has been placed in the operating record and on the owner's or operator's publicly accessible internet site. The owner or operator of the CCR landfill or surface impoundment also must:

(1)(i) Characterize the nature and extent of the release by installing additional monitoring wells as necessary;

(ii) Install at least one additional monitoring well at the facility boundary in the direction of contaminant migration and sample this well in accordance with paragraph (c)(2) of this section;

(iii) Notify all persons who own the land or reside on the land that directly overlies any part of the plume of contamination if contaminants have migrated off-site if indicated by sampling of wells in accordance with paragraph (f)(1) of this section; and

(iv) Initiate an assessment of corrective measures as required by § 257.96 of this part within 90 days; or

(2) May demonstrate that a source other than the CCR landfill or surface impoundment caused the contamination, or that the statistically significant increase resulted from error in sampling, analysis, statistical evaluation, or natural variation in groundwater quality. A report documenting this demonstration must be certified by an independent registered professional engineer or hydrologist and placed in the operating record and on the owner's or operator's publicly accessible internet site, and the state notified of this action. If a successful demonstration is made the owner or operator of the CCR landfill or surface impoundment must continue monitoring in accordance with the assessment monitoring program pursuant to this section, and may return to detection monitoring if the Appendix IV constituents are at or below background as specified in paragraph (d) of this section. Until a successful demonstration is made, the owner or operator of the CCR landfill or surface impoundment must comply with paragraph (f) of this section including initiating an assessment of corrective measures.

(g) The owner or operator of the CCR landfill or surface impoundment must establish a groundwater protection standard for each Appendix IV constituent detected in the groundwater. The groundwater protection standard shall be:

(1) For constituents for which a maximum contaminant level (MCL) has been promulgated under section 1412 of the Safe Drinking Water Act (codified) under 40 CFR part 141, the MCL for that constituent;

(2) For constituents for which MCLs have not been promulgated, the background concentration for the constituent established from wells in accordance with § 257.91(a)(1); or

(3) For constituents for which the background level is higher than the MCL identified under paragraph (g)(1) of this section or health based levels identified under paragraph (h)(1) of this section, the background concentration.

(h) The owner or operator may establish an alternative groundwater protection standard for constituents for which MCLs have not been established provided that the alternative groundwater protection standard has been certified by an independent registered professional engineer and the state has been notified that the alternative groundwater protection standard has been placed in the operating record and on the owner's or operator's publicly accessible internet site. These groundwater protection standards shall be appropriate health based levels that satisfy the following criteria:

(1) The level is derived in a manner consistent with Agency guidelines for assessing the health risks of environmental pollutants;

(2) The level is based on scientifically valid studies conducted in accordance with the Toxic Substances Control Act Good Laboratory Practice Standards (40 CFR part 792) or equivalent;

(3) For carcinogens, the level represents a concentration associated with an excess lifetime cancer risk level

(due to continuous lifetime exposure) within the 1×10^{-4} to 1×10^{-6} range; and

(4) For systemic toxicants, the level represents a concentration to which the human population (including sensitive subgroups) could be exposed to on a daily basis that is likely to be without appreciable risk of deleterious effects during a lifetime. For purposes of this subpart, *systemic toxicants* include toxic chemicals that cause effects other than cancer or mutation.

(i) In establishing groundwater protection standards under paragraph (h) of this section, the owner or operator of the CCR landfill or surface impoundment may consider the following:

(1) Multiple contaminants in the groundwater;

(2) Exposure threats to sensitive environmental receptors; and

(3) Other site-specific exposure or potential exposure to groundwater.

§ 257.96 Assessment of corrective measures.

(a) Within 90 days of finding that any of the constituents listed in Appendix IV to this part have been detected at a statistically significant level exceeding the groundwater protection standards defined under § 257.95 (g) or (h) of this part, the owner or operator of the CCR landfill or surface impoundment must initiate an assessment of corrective measures. Such an assessment must be completed within 90 days.

(b) The owner or operator of the CCR landfill or surface impoundment must continue to monitor in accordance with the assessment monitoring program as specified in § 257.95.

(c) The assessment shall include an analysis of the effectiveness of potential corrective measures in meeting all of the requirements and objectives of the remedy as described under § 257.97, addressing at least the following:

(1) The performance, reliability, ease of implementation, and potential impacts of appropriate potential remedies, including safety impacts, cross-media impacts, and control of exposure to any residual contamination;

(2) The time required to begin and complete the remedy;

(3) The costs of remedy implementation; and

(4) The institutional requirements such as state or local permit requirements or other environmental or public health requirements that may substantially affect implementation of the remedy(s).

(d) The owner or operator of the CCR landfill or surface impoundment must provide notification of the corrective measures assessment to the state and the public.

(e) The owner or operator must discuss the results of the corrective measures assessment, prior to the selection of remedy, in a public meeting with interested and affected parties.

§ 257.97 Selection of remedy.

(a) Based on the results of the corrective measures assessment conducted under § 257.96, the owner or operator of the CCR landfill or surface impoundment must select a remedy that, at a minimum, meets the standards listed in paragraph (b) of this section. The owner or operator of the CCR landfill or surface impoundment must notify the state and the public within 14 days of selecting a remedy, that a report certified by an independent registered professional engineer or hydrologist describing the selected remedy, has been placed in the operating record and on the owner's or operator's publicly accessible internet site, and how it meets the standards in paragraph (b) of this section.

(b) Remedies must:

(1) Be protective of human health and the environment;

(2) Attain the groundwater protection standard as specified pursuant to §§ 257.95 (g) or (h);

(3) Control the source(s) of releases so as to reduce or eliminate, to the maximum extent practicable, further releases of Appendix IV of this part constituents into the environment that may pose a threat to human health or the environment; and

(4) Comply with standards for management of wastes as specified in § 257.98(d).

(c) In selecting a remedy that meets the standards of paragraph (b) of this section, the owner or operator of the CCR landfill or surface impoundment shall consider the following evaluation factors:

(1) The long- and short-term effectiveness and protectiveness of the potential remedy(s), along with the degree of certainty that the remedy will prove successful based on consideration of the following:

(i) Magnitude of reduction of existing risks;

(ii) Magnitude of residual risks in terms of likelihood of further releases due to CCRs remaining following implementation of a remedy;

(iii) The type and degree of long-term management required, including monitoring, operation, and maintenance;

(iv) Short-term risks that might be posed to the community, workers, or the environment during implementation of such a remedy, including potential threats to human health and the environment associated with excavation, transportation, and redisposal of containment;

(v) Time until full protection is achieved;

(vi) Potential for exposure of humans and environmental receptors to remaining wastes, considering the potential threat to human health and the environment associated with excavation, transportation, redisposal, or containment;

(vii) Long-term reliability of the engineering and institutional controls; and

(viii) Potential need for replacement of the remedy.

(2) The effectiveness of the remedy in controlling the source to reduce further releases based on consideration of the following factors:

(i) The extent to which containment practices will reduce further releases;

(ii) The extent to which treatment technologies may be used.

(3) The ease or difficulty of implementing a potential remedy(s) based on consideration of the following types of factors:

(i) Degree of difficulty associated with constructing the technology;

(ii) Expected operational reliability of the technologies;

(iii) Need to coordinate with and obtain necessary approvals and permits from other agencies;

(iv) Availability of necessary equipment and specialists; and

(v) Available capacity and location of needed treatment, storage, and disposal services.

(4) The degree to which community concerns are addressed by a potential remedy(s).

(d) The owner or operator of the CCR landfill or surface impoundment shall specify as part of the selected remedy a schedule(s) for initiating and completing remedial activities. Such a schedule must require the initiation of remedial activities within a reasonable period of time taking into consideration the factors set forth in paragraphs (d) (1) through (8) of this section. The owner or operator of the CCR landfill or surface impoundment must consider the following factors in determining the schedule of remedial activities:

(1) Extent and nature of contamination;

(2) Reasonable probabilities of remedial technologies in achieving compliance with the groundwater protection standards established under § 257.95 (f) or (g) and other objectives of the remedy;

(3) Availability of treatment or disposal capacity for CCRs managed during implementation of the remedy;

(4) Desirability of utilizing technologies that are not currently available, but which may offer significant advantages over already available technologies in terms of effectiveness, reliability, safety, or ability to achieve remedial objectives;

(5) Potential risks to human health and the environment from exposure to contamination prior to completion of the remedy;

(6) Resource value of the aquifer including:

(i) Current and future uses;

(ii) Proximity and withdrawal rate of users;

(iii) Groundwater quantity and quality;

(iv) The potential damage to wildlife, crops, vegetation, and physical structures caused by exposure to CCR constituents;

(v) The hydrogeologic characteristic of the facility and surrounding land;

(vi) Groundwater removal and treatment costs; and

(vii) The cost and availability of alternative water supplies.

(7) Other relevant factors.

(e) The owner or operator of the CCR landfill or surface impoundment may determine that remediation of a release of an Appendix IV constituent from a CCR landfill or surface impoundment is not necessary if the owner or operator of the CCR landfill or surface impoundment demonstrates the following, and notifies the state that the demonstration, certified by an independent registered professional engineer or hydrologist, has been placed in the operating record and on the owner's or operator's publicly accessible internet site:

(1) The groundwater is additionally contaminated by substances that have originated from a source other than a CCR landfill or surface impoundment and those substances are present in concentrations such that cleanup of the release from the CCR landfill or surface impoundment would provide no significant reduction in risk to actual or potential receptors; or

(2) The constituent(s) is present in groundwater that:

(i) Is not currently or reasonably expected to be a source of drinking water; and

(ii) Is not hydraulically connected with waters to which the hazardous constituents are migrating or are likely to migrate in a concentration(s) that would exceed the ground-water protection standards established under § 257.95 (g) or (h); or

(3) Remediation of the release(s) is technically impracticable; or

(4) Remediation results in unacceptable cross-media impacts.

(f) A determination by the owner or operator pursuant to paragraph (e) of this section shall not affect the obligation of the owner or operator to undertake source control measures or other measures that may be necessary to eliminate or minimize further releases to the groundwater, to prevent exposure to the groundwater, or to remediate the groundwater to concentrations that are reasonable and significantly reduce threats to human health or the environment.

§ 257.98 Implementation of the corrective action program.

(a) Based on the schedule established under § 257.97(d) for initiation and completion of remedial activities the owner or operator must:

(1) Establish and implement a corrective action groundwater monitoring program that:

(i) At a minimum, meets the requirements of an assessment monitoring program under § 257.95;

(ii) Indicates the effectiveness of the corrective action remedy; and

(iii) Demonstrates compliance with ground-water protection standard pursuant to paragraph (e) of this section.

(2) Implement the corrective action remedy selected under § 257.97; and

(3) Take any interim measures necessary to ensure the protection of human health and the environment. Interim measures should, to the greatest extent practicable, be consistent with the objectives of and contribute to the performance of any remedy that may be required pursuant to § 257.97. The following factors must be considered by an owner or operator in determining whether interim measures are necessary:

(i) Time required to develop and implement a final remedy;

(ii) Actual or potential exposure of nearby populations or environmental receptors to any of the Appendix IV constituents;

(iii) Actual or potential contamination of drinking water supplies or sensitive ecosystems;

(iv) Further degradation of the groundwater that may occur if remedial action is not initiated expeditiously;

(v) Weather conditions that may cause any of the Appendix IV of this part constituents to migrate or be released;

(vi) Potential for exposure to any of the Appendix IV of this part constituents as a result of an accident or failure of a container or handling system; and

(vii) Other situations that may pose threats to human health and the environment.

(b) An owner or operator of the CCR landfill or surface impoundment may determine, based on information developed after implementation of the remedy has begun or other information, that compliance with requirements of § 257.97(b) are not being achieved through the remedy selected. In such cases, the owner or operator of the CCR landfill or surface impoundment must implement other methods or techniques that could reasonably achieve compliance with the requirements, unless the owner or operator makes the determination under paragraph (c) of this section.

(c) If the owner or operator determines that compliance with requirements under § 257.97(b) cannot be reasonably achieved with any currently available methods, the owner or operator of the CCR landfill or surface impoundment must:

(1) Obtain certification of an independent registered professional engineer or hydrologist that compliance with requirements under § 257.97(b) cannot be reasonably achieved with any currently available methods;

(2) Implement alternate measures to control exposure of humans or the environment to residual contamination, as necessary to protect human health and the environment; and

(3) Implement alternate measures for control of the sources of contamination or for removal or decontamination of equipment, units, devices, or structures that are consistent with the overall objective of the remedy.

(4) Notify the state within 14 days that a report, including the certification required in paragraph (c)(1) of this section, justifying the alternative measures prior to implementing the alternative measures has been placed in the operating record and on the owner's or operator's publicly accessible internet site.

(d) All CCRs that are managed pursuant to a remedy required under § 257.97, or an interim measure required under paragraph (a)(3) of this section, shall be managed in a manner:

(1) That is protective of human health and the environment; and

(2) That complies with applicable RCRA requirements.

(e) Remedies selected pursuant to § 257.97 shall be considered complete when:

(1) The owner or operator of the CCR landfill or surface impoundment complies with the groundwater protection standards established under §§ 257.95 (h) or (i) at all points within the plume of contamination that lie beyond the groundwater monitoring well system established under § 257.91(a).

(2) Compliance with the groundwater protection standards established under §§ 257.95 (h) or (h) has been achieved by demonstrating that concentrations of Appendix IV constituents have not exceeded the groundwater protection standard(s) for a period of three consecutive years using the statistical procedures and performance standards in § 257.93 (g) and (h).

(3) All actions required to complete the remedy have been satisfied.

(f) Upon completion of the remedy, the owner or operator of the CCR landfill or surface impoundment must notify the state within 14 days that a certification that the remedy has been completed in compliance with the requirements of paragraph (e) of this section has been placed in the operating record and on the owner's or operator's publicly accessible internet site. The certification must be signed by the owner or operator and by an independent registered professional engineer or hydrologist.

§ 257.99 [Reserved]

Closure and Post-Closure Care

§ 257.100 Closure criteria.

(a) Prior to closure of any CCR landfill or surface impoundment covered by this subpart, the owner or operator shall submit to the state, a plan for closure of the unit based on recognized and generally accepted good engineering practices and certified by an independent registered professional engineer. The closure plan shall be consistent with paragraph (g) of this section and provide for major slope stability, include a schedule for the plan's implementation and contain provisions to preclude the probability of future impoundment of water, sediment, or slurry. The closure plan shall be placed in the operating record and on the owner's or operator's publicly accessible internet site.

(b) Closure of a CCR landfill or surface impoundment may be accomplished with CCRs in place or through CCR removal and decontamination of all areas affected by releases from the CCR landfill or surface impoundment. CCR removal and decontamination are complete when constituent concentrations throughout the CCR landfill or surface impoundment and any areas affected by releases from the CCR landfill or surface impoundment do not exceed numeric cleanup levels for those constituents found in the CCRs established by the state in which the CCR landfill or surface impoundment is located.

(c) At closure, the owner or operator of a surface impoundment must:

(1) Eliminate free liquids by removing liquid wastes or solidifying the remaining wastes and waste residues;

(2) Stabilize remaining wastes to a bearing capacity sufficient to support the final cover; and

(3) Cover the surface impoundment with a final cover designed and constructed to:

(i) Provide long-term minimization of the migration of liquids through the closed impoundment;

(ii) Function with minimum maintenance; and

(iii) Promote drainage and minimize erosion or abrasion of the cover;

(iv) Accommodate settling and subsidence so that the cover's integrity is maintained; and

(v) Have a final cover system that meets the requirements of subsection (d).

(d) For closure with CCRs in place, a final cover system must be installed at all CCR landfills and surface impoundments that is designed to minimize infiltration and erosion. The final cover system must be designed and constructed to:

(1) Have a permeability less than or equal to the permeability of any bottom liner system or natural subsoils present, or a permeability no greater than 1×10^{-5} cm/sec, whichever is less, and

(2) Minimize infiltration through the closed CCR landfill or surface impoundment by the use of an infiltration layer that contains a minimum 18-inches of earthen material, and

(3) Minimize erosion of the final cover by the use of an erosion layer that contains a minimum 6-inches of earthen material that is capable of sustaining native plant growth, and

(4) Minimize the disruption of the final cover through a design that accommodates settling and subsidence.

(e) The owner or operator of the CCR landfill or surface impoundment may select an alternative final cover design, provided the alternative cover design is certified by an independent registered professional engineer and notification is provided to the state and the EPA Regional Administrator that the alternative cover design has been placed in the operating record and on the owner's or operator's publicly accessible internet site. The alternative final cover design must include:

(1) An infiltration layer that achieves an equivalent reduction in infiltration as the infiltration layer specified in paragraphs (d)(1) and (d)(2) of this section, and

(2) An erosion layer that provides equivalent protection from wind and water erosion as the erosion layer specified in paragraph (d)(3) of this section.

(f) The design of the final cover system shall be placed on the owner's or operator's publicly accessible internet site.

(g) The owner or operator of the CCR landfill or surface impoundment must prepare a written closure plan that describes the steps necessary to close the CCR landfill or surface impoundment at any point during the active life in accordance with the cover design requirements in paragraph (d) or (e) of this section, as applicable. The closure plan, at a minimum, must include the following information:

(1) A description of the final cover, designed in accordance with paragraph (d) or (e) of this section and the methods and procedures to be used to install the cover;

(2) An estimate of the largest area of the CCR landfill or surface impoundment ever requiring a final cover as required under paragraph (d) or (e) of this section at any time during the active life;

(3) An estimate of the maximum inventory of CCRs ever on-site over the active life of the CCR landfill or surface impoundment; and

(4) A schedule for completing all activities necessary to satisfy the closure criteria in this section.

(h) The owner or operator of the CCR landfill or surface impoundment must notify the state that a closure plan, certified by an independent registered professional engineer, has been prepared and placed in the operating record and on the owner's or operator's publicly accessible internet site no later than the effective date of this part, or by the initial receipt of CCRs, whichever is later.

(i) Prior to beginning closure of each CCR landfill or surface impoundment as specified in paragraph (j) of this section, an owner or operator of a CCR landfill or surface impoundment must notify the state that a notice of the intent to close the unit has been placed in the operating record and on the owner's or operator's publicly accessible internet site.

(j) The owner or operator of the CCR landfill or surface impoundment must begin closure activities no later than 30 days after the date on which the CCR landfill or surface impoundment receives the known final receipt of CCR or, if the CCR landfill or surface impoundment has remaining capacity and there is a reasonable likelihood that the CCR landfill or surface impoundment will receive additional CCRs, no later than one year after the most recent receipt of CCRs.

(k) The owner or operator of the CCR landfill or surface impoundment must complete closure activities in accordance with the closure plan within 180 days following the beginning of closure as specified in paragraph (j) of this section.

(l) Following closure of each CCR landfill or surface impoundment, the owner or operator of the CCR landfill or surface impoundment must notify the state that a certification, signed by an independent registered professional engineer, verifying that closure has been completed in accordance with the closure plan and the requirements of this subpart that has been placed in the operating record and on the owner's or operator's publicly accessible internet site.

(m)(1) Following closure of all CCR landfills or surface impoundments, the owner or operator of the CCR landfill or surface impoundment must record a notation on the deed to the property, or some other instrument that is normally examined during title search, and notify the state that the notation has been recorded and a copy has been placed in the operating record and on the owner's or operator's publicly accessible internet site.

(2) The notation on the deed must in perpetuity notify any potential purchaser of the property that:

(i) The land has been used as a CCR landfill or surface impoundment; and

(ii) Its use is restricted under § 257.101(c)(3).

§ 257.101 Post-closure care requirements.

(a) Following closure of each CCR landfill or surface impoundment, the owner or operator must conduct post-closure care. Post-closure care must be conducted for 30 years, except as provided under paragraph (b) of this section, and consist of at least the following:

(1) Maintaining the integrity and effectiveness of any final cover, including making repairs to the cover as necessary to correct the effects of settlement, subsidence, erosion, or other events, and preventing run-on and run-off from eroding or otherwise damaging the final cover;

(2) Maintaining the integrity and effectiveness of the leachate collection and removal system and operating the leachate collection and removal system in accordance with the requirements of §§ 257.70, 257.71, and 257.72.

(3) Maintaining the groundwater monitoring system and monitoring the groundwater in accordance with the requirements of §§ 257.91 through 257.98 of this part.

(b) The length of the post-closure care period may be:

(1) Decreased if the owner or operator of the CCR landfill or surface impoundment demonstrates that the reduced period is sufficient to protect human health and the environment and this demonstration is certified by an independent registered professional engineer and notice is provided to the state that the demonstration has been placed in the operating record and on the owner's or operator's publicly accessible Internet site; or

(2) Increased if the owner or operator of the CCR landfill or surface impoundment determines that a lengthened period is necessary to protect human health and the environment.

(c) The owner or operator of the CCR landfill or surface impoundment must prepare a written post-closure plan, certified by an independent registered professional engineer that includes, at a minimum, the following information:

(1) A description of the monitoring and maintenance activities required in paragraph (a) of this section for each CCR landfill or surface impoundment, and the frequency at which these activities will be performed;

(2) Name, address, and telephone number of the person or office to contact about the facility during the post-closure period; and

(3) A description of the planned uses of the property during the post-closure period. Post-closure use of the property shall not disturb the integrity of the final cover, liner(s), or any other components of the containment system, or the function of the monitoring systems unless necessary to comply with the requirements in this subpart. Any other disturbance is allowed if the owner or operator of the CCR landfill or surface impoundment demonstrates that disturbance of the final cover, liner or other component of the containment system, including any removal of CCRs, will not increase the potential threat to human health or the environment. The demonstration must be certified by an independent registered professional engineer, and notification shall be provided to the state that the demonstration has been placed in the operating record and on the owner's or operator's publicly accessible internet site.

(d) The owner or operator of the CCR landfill or surface impoundment must notify the state that a post-closure plan has been prepared and placed in the operating record and on the owner's or operator's publicly accessible internet site no later than the effective date of this rule, or by the initial receipt of CCRs, whichever is later.

(e) Following completion of the post-closure care period for the CCR landfill or surface impoundment, the owner or operator of the CCR landfill or surface impoundment must notify the state that a certification, signed by an independent registered professional engineer, verifying that post-closure care has been completed in accordance with the post-closure plan has been placed in the operating record and on the owner's or operator's publicly accessible internet site.

§§ 257.102–257.109 [Reserved]

6. Add Appendixes III and IV to Part 257 to read as follows:

Appendix III to Part 257—Constituents for Detection Monitoring

Common Name [1]
Boron
Chloride
Conductivity
Fluoride
pH
Sulphate
Sulfide
Total Dissolved Solids

[1] Common names are those widely used in government regulations, scientific publications, and commerce; synonyms exist for many chemicals.

Appendix IV to Part 257—Constituents for Assessment Monitoring

Common Name [1]
Aluminum
Antimony
Arsenic
Barium
Beryllium
Boron
Cadmium
Chloride
Chromium (total)
Copper
Fluoride
Iron
Lead
Manganese
Mercury
Molybdenum
pH
Selenium
Sulphate
Sulfide
Thallium
Total Dissolved Solids

[1] Common names are those widely used in government regulations, scientific publications, and commerce; synonyms exist for many chemicals.

Alternative 2: Co-Proposal Under Authority of Subtitle C

PART 261—IDENTIFICATION AND LISTING OF HAZARDOUS WASTE

6a. The authority citation for part 261 continues to read as follows:

Authority: 42 U.S.C. 6905, 6912(a), 6921, 6922, 6924(y), and 6938.

7. Section 261.4 is amended by revising paragraph (b)(4) to read as follows.

§ 261.4 Exclusions.

* * * * *

(b) * * *

(4)(i) Fly ash, bottom ash, boiler slag, and flue gas emission control wastes, generated primarily from the combustion of coal for the purpose of generating electricity by the electric power sector if the fly ash, bottom ash, boiler slag, and flue gas emission control wastes are beneficially used or placed in minefilling operations. Beneficial Use of Coal Combustion Products (CCPs) means the use of CCPs that provides a functional benefit; replaces the use of an alternative material, conserving natural resources that would otherwise need to be obtained through practices such as extraction; and meets relevant product specifications and regulatory standards (where these are available). CCPs that are used in excess quantities, placed as fill in sand and gravel pits, or used in large scale fill projects, such as for restructuring the landscape, are not considered beneficial uses.

(ii) Fly ash, bottom ash, boiler slag, and flue gas emission control wastes generated primarily from the combustion of coal for the purpose of generating electricity by facilities outside of the electric power sector (*i.e.,* not included in NAICS code 221112).

(iii) Fly ash, bottom ash, boiler slag, and flue gas emission control wastes, generated primarily from the combustion of fossil fuels other than coal, for the purpose of generating electricity, except as provided by § 266.112 of this chapter for facilities that burn or process hazardous waste.

* * * * *

8. Part 261 is amended by adding Subpart F to read as follows.

Subpart F—Special Wastes Subject to Subtitle C Regulations

§ 261.50 General.

(a) The following solid wastes are special wastes subject to regulation under parts 262 through 268, and parts 270, 271, and 124 of this chapter, and to the notification requirements of section 3010 of RCRA,

Industry and EPA special waste No.	Special waste	Hazard code
Coal Combustion Residuals: S001	Coal combustion residuals generated by the electric power sector (Electric Utilities and Independent Power Producers).	(T)

(b) For the purposes of the S001 listing, the electric power sector is defined as electricity-only and combined-heat-and-power (CHP) plants whose primary business is to sell electricity, or electricity and heat, to the public; *i.e.,* NAICS code 221112 plants. Coal combustion residuals are defined to include fly ash, bottom ash, boiler slag, and flue gas desulfurization materials generated by the electric utility industry. This listing does not apply to coal combustion residuals that are:

(1) Uniquely associated wastes as defined in paragraph (c) of this section;

(2) Beneficially used as defined in paragraph (d) of this section;

(3) Placed in minefilling operations;

(4) Generated by facilities outside the electric power sector (*i.e.,* not included in NAICS code 22112); or

(5) Generated from clean-up activities that are conducted as part of a state or federally required clean-up that commenced prior to the effective date of this rule.

(c) Uniquely associated wastes are low-volume wastes other than those defined as coal combustion residuals in paragraph (a) of this section that are related to the coal combustion process. Examples of uniquely associated wastes are precipitation runoff from coal storage piles at the facility, waste coal or coal mill rejects that are not of sufficient quality to burn as fuel, and wastes from cleaning the boilers used to generate steam.

(d) Beneficial Use of Coal Combustion Products (CCPs) means the use of CCPs that provides a functional benefit; replaces the use of an alternative material, conserving natural resources that would otherwise need to be obtained through practices such as extraction; and meets relevant product specifications and regulatory standards (where these are available). CCPs that are used in excess quantities, placed as fill in sand and gravel pits, or used in large scale fill projects, such as for restructuring the landscape, are not considered beneficial uses.

9. Part 261 is amended by adding Appendix X to read as follows.

Appendix X to Part 261—Basis for Listing Special Wastes

EPA special waste No.	Hazardous constituents for which listed
S001	Antimony, arsenic, barium, beryllium, cadmium, chromium, lead, mercury, nickel, selenium, silver, thallium.

PART 264—STANDARDS FOR OWNERS AND OPERATORS OF HAZARDOUS WASTE TREATMENT, STORAGE, AND DISPOSAL FACILITIES

10. The authority citation for part 264 continues to read as follows:

Authority: 42 U.S.C. 6905, 6912(a), 6924, and 6925.

11. Section 264.1 is amended by adding paragraph (k) to read as follows:

§ 264.1 Purpose, scope and applicability.

* * * * *

(k) Owners or operators who treat, store or dispose of EPA Special Waste Number S001, also referred to as coal combustion residuals are subject to the requirements of this part, except as specifically provided otherwise in this part. In addition, subpart FF of this part includes additional requirements for the treatment, storage or disposal of EPA Special Waste Number S001.

12. Section 264.140 is amended by revising paragraph (a) to read as follows:

§ 264.140 Applicability.

(a) The requirements of §§ 264.142, 264.143, and 264.147 through 264.151 apply to owners and operators of all hazardous waste facilities and facilities that treat, store or dispose of special wastes, except as provided otherwise in this section, or in § 264.1.

* * * * *

13. Part 264 is amended by adding subpart FF to read as follows:

Subpart FF—Special Requirements for Coal Combustion Residual (S001) Wastes

Sec.
264.1300 Applicability.
264.1301 Definitions.
264.1302 Reporting.
264.1303 Surface impoundments.
264.1304 Inspection requirements for surface impoundments.
264.1305 Requirements for surface impoundment closure.
264.1306 Landfills.
264.1307 Surface water requirements.
264.1308 Air requirements.

Subpart FF—Special Requirements for Coal Combustion Residual (S001) Wastes

§ 264.1300 Applicability.

(a) The regulations in this subpart apply to owners or operators of facilities that treat, store or dispose of EPA Special Waste Number S001.

(b) Owners or operators of surface impoundments that cease receiving EPA Special Waste Number S001, must comply with the closure requirements in 40 CFR 265.111 and 40 CFR 265.228. Facilities that have not met these closure requirements by the effective date of this regulation would be subject to the requirements in Parts 260 through 268, and 270 through 272, of this chapter.

§ 264.1301 Definitions.

This section contains definitions for terms that appear throughout this subpart; additional definitions appear in 40 CFR 260.10 or the specific sections to which they apply.

Area-capacity curves means graphic curves which readily show the reservoir water surface area, in acres, at different elevations from the bottom of the reservoir to the maximum water surface, and the capacity or volume, in acre-feet, of the water contained in the reservoir at various elevations.

CCR landfill means a disposal facility or part of a facility where CCRs are placed in or on land and which is not a land treatment facility, a surface impoundment, an underground injection well, a salt dome formation, a salt bed formation, an underground mine, a cave, or a corrective action management unit. For purposes of this subpart, landfills also include piles, sand and gravel pits, quarries, and/or large scale fill operations. Sites that are excavated so that more coal ash can be used as fill are also considered CCR landfills.

CCR surface impoundment or *impoundment* means a facility or part of a facility which is a natural topographic depression, man-made excavation, or diked area formed primarily of earthen materials (although it may be lined with man-made materials), which is designed to hold an accumulation of CCRs containing free liquids, and which is not an injection well. Examples of CCR surface impoundments are holding, storage, settling, and aeration pits, ponds, and lagoons. CCR surface impoundments are used to receive CCRs that have been sluiced (flushed or mixed with water to facilitate movement), or wastes from wet air pollution control devices, often in addition to other solid wastes.

Coal Combustion Residuals (CCRs) means fly ash, bottom ash, boiler slag, and flue gas desulfurization materials, destined for disposal. CCRs are also known as coal combustion wastes (CCWs) and fossil fuel combustion (FFC) wastes, when destined for disposal.

Existing CCR landfill means a landfill which was in operation or for which construction commenced prior to the effective date of the final rule. A CCR landfill has commenced construction if the owner or operator has obtained the Federal, State and local approvals or permits necessary to begin physical construction; and either

(1) A continuous on-site, physical construction program has begun; or

(2) The owner or operator has entered into contractual obligations—which cannot be cancelled or modified without substantial loss—for physical construction of the CCR landfill to be completed within a reasonable time.

Existing CCR surface impoundment means a surface impoundment which was in operation or for which construction commenced prior to the effective date of the final rule. A CCR surface impoundment has commenced construction if the owner or operator has obtained the Federal, State and local approvals or permits necessary to begin physical construction; and either

(1) A continuous on-site, physical construction program has begun; or

(2) The owner or operator has entered into contractual obligations—which can not be cancelled or modified without substantial loss—for physical construction of the CCR surface impoundment to be completed within a reasonable time.

Factor of safety (Safety factor) means the ratio of the forces tending to resist the failure of a structure to the forces tending to cause such failure as determined by recognized and generally accepted good engineering practices.

Hazard potential means the possible adverse incremental consequences that result from the release of water or stored contents due to failure of a dam (or impoundment) or mis-operation of the dam or appurtenances.

(1) *High hazard potential surface impoundment* means a surface impoundment where failure or mis-operation will probably cause loss of human life.

(2) *Significant hazard potential surface impoundment* means a surface impoundment where failure or mis-operation results in no probable loss of human life, but can cause economic loss, environment damage, disruption of lifeline facilities, or impact other concerns.

(3) *Low hazard potential surface impoundment* means a surface impoundment where failure or mis-operation results in no probable loss of human life and low economic and/or environmental losses. Losses are principally limited to the surface impoundment owner's property.

(4) *Less than low hazard potential surface impoundment* means a surface impoundment not meeting the definitions for High, Significant, or Low Hazard Potential.

Lateral expansion means a horizontal expansion of the waste boundaries of an existing CCR landfill, or CCR surface impoundment made after the effective date of the final rule.

New CCR landfill means a landfill, including lateral expansions, or installation from which there is or may be placement of CCRs without the presence of free liquids, which began operation, or for which the construction commenced after the effective date of the final rule.

New CCR surface impoundment means a surface impoundment, including lateral expansions, or installation from which there is or may be placement of CCRs with the presence of free liquids, which began operation, or for which the construction commenced after the effective date of the final rule.

Probable maximum precipitation means the value for a particular area which represents an envelopment of depth-duration-area rainfall relations for all storm types affecting that area adjusted meteorologically to maximum conditions.

Recognized and generally accepted good engineering practices (RAGAGEPs)

means engineering, operation, or maintenance activities based on established codes, standards, published technical reports or recommended practices (RP) or a similar document. RAGAGEPs detail generally approved ways to perform specific engineering, inspection or mechanical integrity activities.

§ 264.1302 Reporting.

(a) Except as provided in paragraph (b) of this section, every twelfth month following the date of the initial plan approval required in § 264.1303, the person owning or operating a CCR surface impoundment that has not been properly closed in accordance with an approved plan shall submit to the Regional Administrator a report containing the following information:

(1) Changes in the geometry of the CCR surface impoundment for the reporting period.

(2) Location and type of installed instruments and the maximum and minimum recorded readings of each instrument for the reporting period.

(3) The minimum, maximum, and present depth and elevation of the CCR slurry and CCR wastewater in the CCR surface impoundment for the reporting period.

(4) The storage capacity of the CCR surface impoundment.

(5) The volume of the CCR slurry and CCR wastewater in the CCR surface impoundment at the end of the reporting period.

(6) Any other change which may have affected the stability or operation of the CCR surface impoundment that has occurred during the reporting period.

(7) A certification by an independent registered professional engineer that all construction, operation, and maintenance are in accordance with the approved plan prepared in accordance with § 264.1303.

(b) A report is not required under this section when the person owning or operating the CCR surface impoundment provides the Regional Administrator with a certification by an independent registered professional engineer that there have been no changes in the operation of the CCR surface impoundment or to any of the parameters previously reported under paragraphs (a)(1) through (a)(6) of this section. However, a report containing the information set out in paragraph (a) of this section shall be submitted to the Regional Administrator at least every 5 years.

§ 264.1303 Surface impoundments.

(a) In addition to the requirements in subpart K of this part, EPA Special Waste No. S001 is subject to the requirements in this section.

(b) Plans for the design, construction, and maintenance of existing CCR surface impoundments shall be required if such a unit can:

(1) Impound CCRs to an elevation of five feet or more above the upstream toe of the structure and can have a storage volume of 20 acre-feet or more; or

(2) Impound CCRs to an elevation of 20 feet or more above the upstream toe of the structure.

(c) Plans required under paragraph (b) of this section shall be submitted in triplicate to the Regional Administrator on or before [date one year after the effective date of the final rule].

(d) A permanent identification marker, at least six feet high and showing the identification number of the CCR surface impoundment as assigned by the Regional Administrator, the name associated with the CCR surface impoundment and the name of the person owning or operating the structure, shall be located on or immediately adjacent to each CCR surface impoundment by [date 60 days after the effective date of the final rule].

(e) The plan specified in paragraph (b) of this section, shall contain at a minimum the following information:

(1) The name and address of the persons owning or operating the CCR surface impoundment; the name associated with the CCR surface impoundment; and the identification number of the CCR surface impoundment as assigned by the Regional Administrator.

(2) The location of the CCR surface impoundment indicated on the most recent USGS 7½ minute or 15 minute topographic quadrangle map, or a topographic map of equivalent scale if a USGS map is not available.

(3) A statement of the purpose for which the CCR surface impoundment is being used.

(4) The name and size in acres of the watershed affecting the CCR surface impoundment.

(5) A description of the physical and engineering properties of the foundation materials on which the CCR surface impoundment is constructed.

(6) A statement of the type, size, range, and physical and engineering properties of the materials used in constructing each zone or stage of the CCR surface impoundment; the method of site preparation and construction of each zone of the CCR surface impoundment; the approximate dates of construction, and each successive stage of construction of the CCR surface impoundment; and for existing CCR surface impoundments, such history of construction as may be available, and any record or knowledge of structural instability.

(7) At a scale not to exceed 1 inch = 100 feet, detailed dimensional drawings of the CCR surface impoundment, including a plan view and cross sections of the length and width of the CCR surface impoundment, showing all zones, foundation improvements, drainage provisions, spillways, diversion ditches, outlets, instrument locations, and slope protection, in addition to the measurement of the minimum vertical distance between the crest of the CCR surface impoundment and the reservoir surface at present and under design storm conditions, CCR slurry level and CCR wastewater level, and other information pertinent to the CCR surface impoundment itself, including any identifiable natural or manmade features which could affect operation of the CCR surface impoundment.

(8) A description of the type and purpose of existing or proposed instrumentation.

(9) Graphs showing area-capacity curves.

(10) The hazard potential classification for which the facility is designed and a detailed explanation of the basis for this classification.

(11) A statement of the runoff attributable to the storm for which the CCR surface impoundment is designed and the calculations used in determining such runoff and the minimum freeboard during the design storm.

(12) A description of the spillway and diversion design features and capacities and calculations used in their determination.

(13) The computed minimum factor of safety for slope stability of the CCR retaining structure(s) and the analyses used in their determinations.

(14) The construction specifications and provisions for surveillance, maintenance, and repair of the CCR surface impoundment.

(15) General provisions for closure.

(16) Such other information pertaining to the CCR surface impoundment which may be requested by the Regional Administrator.

(17) A certification by an independent registered professional engineer that the design of the CCR surface impoundment is in accordance with recognized and generally accepted good engineering practices for the maximum volume of CCR slurry and CCR wastewater which can be impounded therein and for the passage of runoff from the design storm which exceeds the capacity of the CCR surface impoundment; or, in lieu of the

certification, a report indicating what additional investigations, analyses, or improvement work are necessary before such a certification can be made by an independent registered professional engineer, including what provisions have been made to carry out such work in addition to a schedule for completion of such work.

(f) Any changes or modifications to the plans for CCR surface impoundments shall be approved by the Regional Administrator prior to the initiation of such changes or modifications.

(g) Effective [date two years after the effective date of the final rule], all existing CCR surface impoundments that receive CCRs shall be operated and maintained with:

(1) A run-on control system to prevent flow onto the active portion of the CCR surface impoundment during the peak discharge from a 24-hour, 25-year storm;

(2) A run-off control system from the active portion of the CCR surface impoundment to collect and control at least the water volume resulting from a 24-hour, 25-year storm. Run-off from the active portion of the CCR surface impoundment must be handled in accordance with § 264.1307.

(h) For CCR surface impoundments classified as having high or significant hazard potential, the owner or operator shall develop and maintain in the operating record an Emergency Action Plan which: defines responsible persons and the actions to be taken in the event of a dam-safety emergency; provides contact information for emergency responders; includes a map which delineates the downstream area which would be affected in the event of a dam failure; and includes provisions for an annual face-to-face meeting or exercise between representatives of the facility owner and the local emergency responders.

§ 264.1304 Inspection requirements for surface impoundments.

(a) In addition to the inspection requirements in § 264.226 of this part, all CCR surface impoundments that meet the requirements of § 264.1303(b) of this subpart shall be inspected by the owner or operator as follows:

(1) At intervals not exceeding 7 days, or as otherwise approved by the Regional Administrator, for appearances of structural weakness and other hazardous conditions.

(2) At intervals not exceeding 7 days, or as otherwise approved by the Regional Administrator, all instruments shall be monitored.

(3) Longer inspection or monitoring intervals approved under this paragraph shall be justified by the owner or operator of the CCR surface impoundment based on the hazard potential and performance of the CCR surface impoundment, and shall include a requirement for inspection immediately after a specified event approved by the Regional Administrator.

(4) All inspections required by paragraphs (a)(1) and (2) shall be performed by a qualified person, as defined in paragraph (e) of this section, designated by the person owning or operating the CCR surface impoundment.

(5) All CCR surface impoundments that meet the requirements of § 264.1303(b) of this subpart shall be inspected annually by an independent registered professional engineer to assure that the design, operation, and maintenance of the surface impoundment is in accordance with recognized and generally accepted good engineering standards. The owner or operator must notify the state and the EPA Regional Administrator that a certification by the registered professional engineer that the design, operation, and maintenance of the surface impoundment is in accordance with recognized and generally accepted good engineering standards has been placed in the operating record.

(b) When a potentially hazardous condition develops, the person owning or operating the CCR surface impoundment shall immediately:

(1) Take action to eliminate the potentially hazardous condition;

(2) Notify the Regional Administrator and State and local first responders;

(3) Notify and prepare to evacuate, if necessary, all personnel from the owner or operator's property which may be affected by the potentially hazardous conditions; and

(4) Direct a qualified person to monitor all instruments and examine the structure at least once every eight hours, or more often as required by an authorized representative of the Regional Administrator.

(c) After each inspection and instrumentation monitoring referred to in paragraphs (a) and (b) of this section, each qualified person who conducted all or any part of the inspection or instrumentation monitoring shall promptly record the results of such inspection or instrumentation monitoring in a book which shall be available in the operating record for inspection by an authorized representative of the Regional Administrator and such qualified person shall also promptly report the results of the inspection or monitoring to one of the persons specified in paragraph (d) of this section.

(d) All inspection and instrumentation monitoring reports recorded in accordance with paragraph (c) of this section shall include a report of the action taken to abate hazardous conditions and shall be promptly signed or countersigned by the person designated by the owner or operator as responsible for health and safety at the owner or operator's facility.

(e) The qualified person or persons referred to in this section shall be trained to recognize specific signs of structural instability and other hazardous conditions by visual observation and, if applicable, to monitor instrumentation.

§ 264.1305 Requirements for surface impoundment closure.

Prior to the closure of any CCR surface impoundment which meets the requirements of § 264.1303(b) of this subpart, the person owning or operating such CCR surface impoundment shall submit to and obtain approval from the Regional Administrator, a plan for closure in accordance with the requirements of § 264.228 and subpart G of this part. This plan shall provide for major slope stability, include a schedule for the plan's implementation and, contain provisions to preclude the probability of future impoundment of water.

§ 264.1306 Landfills.

(a) Owners or operators of new CCR landfills and lateral expansions of existing landfills are exempt from the double liner and leachate collection system requirements of § 264.301(c), and the requirements of § 264.302, provided the owner or operator is in compliance with the requirements of paragraph (b) of this section. Owners or operators of existing landfills are also exempt from the liner requirements of paragraph (b)(1) of this section, provided they comply with the requirements of paragraph (c) of this section and the requirements at 40 CFR part 264 subparts F, G, H, and N.

(b) Prior to placement of CCRs in new landfills and lateral expansions of new and existing landfills, new landfills and lateral expansions shall be constructed:

(1) With a composite liner, as defined in paragraph (b)(2) of this section, and a leachate collection and removal system that is designed and constructed to maintain less than a 30-cm depth of leachate over the liner.

(2) For purposes of this subpart, composite liner means a system consisting of two components; the upper component must consist of a

minimum 30-mil flexible membrane liner (FML), and the lower component must consist of at least a two-foot layer of compacted soil with a hydraulic conductivity of no more than 1×10^{-7} cm/sec. FML components consisting of high density polyethylene (HDPE) shall be at least 60-mil thick. The FML component must be installed in direct and uniform contact with the compacted soil component.

(3) For purpose of this subpart, hydraulic conductivity means the rate at which water can move through a permeable medium (*i.e.,* the coefficient of permeability).

(c) Effective [date two years after the effective date of the final rule], all existing landfills that receive CCRs shall be operated and maintained with:

(1) A run-on control system to prevent flow onto the active portion of the CCR landfill during the peak discharge from a 24-hour, 25-year storm;

(2) A run-off control system from the active portion of the CCR landfill to collect and control at least the water volume resulting from a 24-hour, 25-year storm. Run-off from the active portion of the CCR landfill must be handled in accordance with § 264.1307 of this subpart.

§ 264.1307 Surface water requirements.

(a) Permits for CCR surface impoundments and CCR landfills shall include conditions to ensure that:

(1) The operation of the unit will not cause any violation of any requirements of the Clean Water Act, including, but not limited to, the National Pollutant Discharge Elimination System (NPDES) requirements, pursuant to section 402 of the Clean Water Act.

(2) The operation of the unit will not cause any violation of any requirement of an area-wide or state-wide water quality management plan that has been approved under section 208 or 319 of the Clean Water Act, as amended.

(b) [Reserved]

§ 264.1308 Air requirements.

(a) CCR surface impoundments and CCR landfills must be managed in a manner that fugitive dusts do not exceed 35 $\mu g/m^3$, unless an alternative standard has been established by the Regional Administrator.

(b) CCR surface impoundments must be managed to control wind dispersal of dusts consistent with the standard in paragraph (a) of this section unless an alternative standard has been established by the Regional Administrator.

(c) CCR landfills must be managed to control wind dispersal of dusts consistent with the standard in paragraph (a) of this section unless an alternative standard has been established by the Regional Administrator. CCRs placed in landfills as wet conditioned CCRs shall not result in the formation of free liquids.

(d) Tanks, containers, buildings and pads used for the storage must be managed to control the dispersal of dust. Pads must have wind protection that will ensure comparable levels of control.

(e) CCRs transported in trucks or other vehicles must be covered or otherwise managed to control the wind dispersal of dust consistent with the standard in paragraph (a) of this section unless an alternative standard has been established by the Regional Administrator.

PART 265—INTERIM STATUS STANDARDS FOR OWNERS AND OPERATORS OF HAZARDOUS WASTE TREATMENT, STORAGE, AND DISPOSAL FACILITIES

14. The authority citation for part 265 continues to read as follows:

Authority: 42 U.S.C. 6905, 6906, 6912, 6922, 6923, 6924, 6925, 6935, 6936, and 6937.

15. Section 265.1 is amended by adding paragraph (g) to read as follows:

§ 265.1 Purpose, scope, and applicability.

* * * * *

(g) Owners or operators who treat, store or dispose of EPA Special Waste Number S001, also referred to as coal combustion residuals (CCRs) are subject to the requirements of this part, except as specifically provided otherwise in this part. In addition, subpart FF of this part includes additional requirements for the treatment storage or disposal of EPA Special Waste No. S001.

* * * * *

16. Section 265.140 is amended by revising paragraph (a) to read as follows:

§ 265.140 Applicability.

(a) The requirements of §§ 265.142, 265.143 and 265.147 through 265.150 apply to owners or operators of all hazardous and special waste facilities, except as provided otherwise in this section, or in § 265.1.

* * * * *

17. Part 265 is amended by adding Subpart FF to read as follows:

Subpart FF—Special Requirements for S001 Wastes

Sec.

265.1300 Applicability.
265.1301 Definitions.
265.1302 Reporting.
265.1303 Surface impoundments.
265.1304 Inspection requirements for surface impoundments.
265.1305 Requirements for surface impoundment closure.
265.1306 Landfills.
265.1307 Surface water requirements.
265.1308 Air requirements.

Subpart FF—Special Requirements for S001 Wastes

§ 265.1300 Applicability.

(a) The regulations in this subpart apply to owners or operators of hazardous waste facilities that treat, store or dispose of EPA Hazardous Waste Number S001.

(b) Owners or operators of surface impoundments that cease receiving EPA Special Waste Number S001,must comply with the closure requirements in 40 CFR Part 265.111 and 40 CFR 265.228. Facilities that have not met these closure requirements by the effective date of this regulation would be subject to the requirements in Parts 260 through 268, and 270 through 272, of this chapter.

§ 265.1301 Definitions.

This section contains definitions for terms that appear throughout this subpart; additional definitions appear in 40 CFR 260.10 or the specific sections to which they apply.

Area-capacity curves means graphic curves which readily show the reservoir water surface area, in acres, at different elevations from the bottom of the reservoir to the maximum water surface, and the capacity or volume, in acre-feet, of the water contained in the reservoir at various elevations.

Coal Combustion Residuals (CCRs) means fly ash, bottom ash, boiler slag, and flue gas desulfurization materials, destined for disposal. CCRs are also known as coal combustion wastes (CCWs) and fossil fuel combustion (FFC) wastes, when destined for disposal, and as coal combustion products (CCPs) when beneficially used.

CCR landfill means a disposal facility or part of a facility where CCRs are placed in or on land and which is not a land treatment facility, a surface impoundment, an underground injection well, a salt dome formation, a salt bed formation, an underground mine, a cave, or a corrective action management unit. For purposes of this subpart, landfills also include piles, sand and gravel pits, quarries, and/or large scale fill operations. Sites that are excavated so that more coal ash can be used as fill are also considered CCR landfills.

CCR surface impoundment or *impoundment* means a facility or part of a facility which is a natural topographic

depression, man-made excavation, or diked area formed primarily of earthen materials (although it may be lined with man-made materials), which is designed to hold an accumulation of CCRs containing free liquids, and which is not an injection well. Examples of CCR surface impoundments are holding, storage, settling, and aeration pits, ponds, and lagoons. CCR surface impoundments are used to receive CCRs that have been sluiced (flushed or mixed with water to facilitate movement), or wastes from wet air pollution control devices, often in addition to other solid wastes.

Existing CCR landfill means a landfill which was in operation or for which construction commenced prior to the effective date of the final rule A CCR landfill has commenced construction if the owner or operator has obtained the Federal, State and local approvals or permits necessary to begin physical construction; and either

(1) A continuous on-site, physical construction program has begun; or

(2) The owner or operator has entered into contractual obligations—which cannot be cancelled or modified without substantial loss—for physical construction of the CCR landfill to be completed within a reasonable time.

Existing CCR surface impoundment means a surface impoundment which was in operation or for which construction commenced prior to the effective date of the final rule. A CCR surface impoundment has commenced construction if the owner or operator has obtained the Federal, State and local approvals or permits necessary to begin physical construction; and either

(1) A continuous on-site, physical construction program has begun; or

(2) The owner or operator has entered into contractual obligations—which can not be cancelled or modified without substantial loss—for physical construction of the CCR surface impoundment to be completed within a reasonable time.

Factor of safety (Safety factor) means the ratio of the forces tending to resist the failure of a structure to the forces tending to cause such failure as determined by recognized and accepted good engineering practices.

Hazard potential means the possible adverse incremental consequences that result from the release of water or stored contents due to failure of a dam (or impoundment) or mis-operation of the dam or appurtenances.

(1) *High hazard potential surface impoundment* means a surface impoundment where failure or mis-operation will probably cause loss of human life.

(2) *Significant hazard potential surface impoundment* means a surface impoundment where failure or mis-operation results in no probable loss of human life, but can cause economic loss, environment damage, disruption of lifeline facilities, or impact other concerns.

(3) *Low hazard potential surface impoundment* means a surface impoundment where failure or mis-operation results in no probable loss of human life and low economic and/or environmental losses. Losses are principally limited to the surface impoundment owner's property.

(4) *Less than low hazard potential surface impoundment* means a surface impoundment not meeting the definitions for High, Significant, or Low Hazard Potential.

Lateral expansion means a horizontal expansion of the waste boundaries of an existing CCR landfill, or CCR surface impoundment made after the effective date of the final rule.

New CCR landfill means a landfill, including lateral expansions, or installation from which there is or may be placement of CCRs without the presence of free liquids, which began operation, or for which the construction commenced after the effective date of the final rule.

New CCR surface impoundment means a surface impoundment, including lateral expansion, or installation from which there is or may be placement of CCRs with the presence of free liquids, which began operation, or for which the construction commenced after the effective date of the final rule.

Probable maximum precipitation means the value for a particular area which represents an envelopment of depth-duration-area rainfall relations for all storm types affecting that area adjusted meteorologically to maximum conditions.

Recognized and generally accepted good engineering practices (RAGAGEPs) means engineering, operation, or maintenance activities based on established codes, standards, published technical reports or recommended practices (RP) or a similar document. RAGAGEPs detail generally approved ways to perform specific engineering, inspection or mechanical integrity activities.

§ 265.1302 Reporting.

(a) Except as provided in paragraph (b) of this section, every twelfth month following the date of the initial plan approval required in § 265.1303 of this subpart, the person owning or operating a CCR surface impoundment that has not been properly closed in accordance with an approved plan shall submit to the Regional Administrator a report containing the following information:

(1) Changes in the geometry of the CCR surface impoundment for the reporting period.

(2) Location and type of installed instruments and the maximum and minimum recorded readings of each instrument for the reporting period.

(3) The minimum, maximum, and present depth and elevation of the CCR slurry and CCR waste water in the CCR surface impoundment for the reporting period.

(4) The storage capacity of the CCR surface impoundment.

(5) The volume of the CCR slurry and CCR waste water in the CCR surface impoundment at the end of the reporting period.

(6) Any other change which may have affected the stability or operation of the CCR surface impoundment that has occurred during the reporting period.

(7) A certification by an independent registered professional engineer that all construction, operation, and maintenance are in accordance with the approved plan prepared in accordance with § 265.1303.

(b) A report is not required under this section when the person owning or operating the CCR surface impoundment provides the Regional Administrator with a certification by an independent registered professional engineer that there have been no changes in the operation of the CCR surface impoundment or to any of the parameters previously reported under paragraphs (a)(1) through (a)(6) of this section. However, a report containing the information set out in paragraph (a) of this section shall be submitted to the Regional Administrator at least every 5 years.

§ 265.1303 Surface impoundments.

(a) In addition to the requirements in subpart K of this part, EPA Special Waste No. S001 is subject to the requirements in this section.

(b) Plans for the design, construction, and maintenance of existing CCR surface impoundments shall be required if such a unit can:

(1) Impound CCRs to an elevation of five feet or more above the upstream toe of the structure and can have a storage volume of 20 acre-feet or more; or

(2) Impound CCRs to an elevation of 20 feet or more above the upstream toe of the structure.

(c) Plans required under paragraph (b) of this section shall be submitted in triplicate to the Regional Administrator on or before [date one year after the effective date of the final rule].

(d) A marker, at least six feet high and showing the identification number of the CCR surface impoundment as assigned by the Regional Administrator, the name associated with the CCR surface impoundment and the name of the person owning or operating the structure, shall be located on or immediately adjacent to each CCR surface impoundment permanent identification by [date 60 days after the effective date of the final rule].

(e) The plan specified in paragraph (b) of this section, shall contain at a minimum the following information:

(1) The name and address of the persons owning or operating the CCR surface impoundment; the name associated with the CCR surface impoundment; and the identification number of the CCR surface impoundment as assigned by the Regional Administrator.

(2) The location of the CCR surface impoundment indicated on the most recent USGS 7½ minute or 15 minute topographic quadrangle map, or a topographic map of equivalent scale if a USGS map is not available.

(3) A statement of the purpose for which the CCR surface impoundment is being used.

(4) The name and size in acres of the watershed affecting the CCR surface impoundment.

(5) A description of the physical and engineering properties of the foundation materials on which the CCR surface impoundment is constructed.

(6) A statement of the type, size, range, and physical and engineering properties of the materials used in constructing each zone or stage of the CCR surface impoundment; the method of site preparation and construction of each zone of the CCR surface impoundment; the approximate dates of construction, and each successive stage of construction of the CCR surface impoundment; and for existing CCR surface impoundments, such history of construction as may be available, and any record or knowledge of structural instability.

(7) At a scale not to exceed 1 inch = 100 feet, detailed dimensional drawings of the CCR surface impoundment, including a plan view and cross sections of the length and width of the CCR surface impoundment, showing all zones, foundation improvements, drainage provisions, spillways, diversion ditches, outlets, instrument locations, and slope protection, in addition to the measurement of the minimum vertical distance between the crest of the CCR surface impoundment and the reservoir surface at present and under design storm conditions, CCR slurry level or CCR waste water level, and other information pertinent to the CCR surface impoundment itself, including any identifiable natural or manmade features which could affect operation of the CCR surface impoundment.

(8) A description of the type and purpose of existing or proposed instrumentation.

(9) Graphs showing area-capacity curves.

(10) The hazard potential classification for which the facility is designed and a detailed explanation of the basis for this classification.

(11) A statement of the runoff attributable to the storm for which the CCR surface impoundment is designed and the calculations used in determining such runoff and the minimum freeboard during the design storm.

(12) A description of the spillway and diversion design features and capacities and calculations used in their determination.

(13) The computed minimum factor of safety for slope stability of the CCR retaining structure(s) and the analyses used in their determinations.

(14) The construction specifications and provisions for surveillance, maintenance, and repair of the CCR surface impoundment.

(15) General provisions for closure.

(16) Such other information pertaining to the stability of the CCR surface impoundment which may be requested by the Regional Administrator.

(17) A certification by an independent registered professional engineer that the design of the CCR surface impoundment is in accordance with recognized and generally accepted good engineering practices for the maximum volume of CCR slurry and CCR waste water which can be impounded therein and for the passage of runoff from the design storm which exceeds the capacity of the CCR surface impoundment; or, in lieu of the certification, a report indicating what additional investigations, analyses, or improvement work are necessary before such a certification can be made by an independent registered professional engineer, including what provisions have been made to carry out such work in addition to a schedule for completion of such work.

(f) Any changes or modifications to the plans for CCR surface impoundments shall be approved by the Regional Administrator prior to the initiation of such changes or modifications.

(g) Effective [date two years after the effective date of the final rule], all existing surface impoundments that receive CCRs shall be operated and maintained with:

(1) A run-on control system to prevent flow onto the active portion of the CCR surface impoundment during the peak discharge from a 24-hour, 25-year storm;

(2) A run-off control system from the active portion of the CCR surface impoundment to collect and control at least the water volume resulting from a 24-hour, 25-year storm. Run-off from the active portion of the CCR surface impoundment must be handled in accordance with § 265.1307 of this subpart.

(h) For CCR surface impoundments classified as having high or significant hazard potential, the owner or operator shall develop and maintain in the operating record an Emergency Action Plan which: defines responsible persons and the actions to be taken in the event of a dam-safety emergency; provides contact information for emergency responders; includes a map which delineates the downstream area which would be affected in the event of a dam failure; and includes provisions for an annual face-to-face meeting or exercise between representatives of the facility owner and the local emergency responders.

§ 265.1304 Inspection requirements for surface impoundments.

(a) In addition to the inspection requirements in § 265.226, all CCR surface impoundments that meet the requirements of § 265.1303(b) of this subpart shall be inspected by the owner or operator as follows:

(1) At intervals not exceeding 7 days, or as otherwise approved by the Regional Administrator, for appearances of structural weakness and other hazardous conditions.

(2) At intervals not exceeding 7 days, or as otherwise approved by the Regional Administrator, all instruments shall be monitored.

(3) Longer inspection or monitoring intervals approved under this paragraph shall be justified by the owner or operator of the CCR surface impoundment based on the hazard potential and performance of the CCR surface impoundment, and shall include a requirement for inspection immediately after a specified event approved by the Regional Administrator.

(4) All inspections required by paragraphs (a)(1) and (2) of this section shall be performed by a qualified person, as defined in paragraph (e) of this section, designated by the person owning or operating the CCR surface impoundment.

(5) All CCR surface impoundments that meet the requirements of § 265.1303(b) of this subpart shall be inspected annually by an independent registered professional engineer to assure that the design, operation, and maintenance of the surface impoundment is in accordance with recognized and generally accepted good engineering practices. The owner or operator must notify the state and the EPA Regional Administrator that a certification by the independent registered professional engineer that the design, operation, and maintenance of the surface impoundment is in accordance with recognized and generally accepted good engineering practices has been placed in the operating record.

(b) When a potentially hazardous condition develops, the person owning or operating the CCR surface impoundment shall immediately:

(1) Take action to eliminate the potentially hazardous condition;

(2) Notify the Regional Administrator and State and local first responders;

(3) Notify and prepare to evacuate, if necessary, all personnel from the owner or operator's property which may be affected by the potentially hazardous conditions; and

(4) Direct a qualified person to monitor all instruments and examine the structure at least once every eight hours, or more often as required by an authorized representative of the Regional Administrator.

(c) After each inspection and instrumentation monitoring referred to in paragraphs (a) and (b) of this section, each qualified person who conducted all or any part of the inspection or instrumentation monitoring shall promptly record the results of such inspection or instrumentation monitoring in a book which shall be available in the operating record for inspection by an authorized representative of the Regional Administrator and such qualified person shall also promptly report the results of the inspection or monitoring to one of the persons specified in paragraph (d) of this section.

(d) All inspection and instrumentation monitoring reports recorded in accordance with paragraph (c) of this section shall include a report of the action taken to abate hazardous conditions and shall be promptly signed or countersigned by the person designated by the owner or operator as responsible for health and safety at the owner or operator's facility.

(e) The qualified person or persons referred to in this section shall be trained to recognize specific signs of structural instability and other hazardous conditions by visual observation and, if applicable, to monitor instrumentation.

§ 265.1305 Requirements for surface impoundment closure.

Prior to the closure of any CCR surface impoundment which meets the requirements of § 264.1303(b) of this subpart, the person owning or operating such CCR surface impoundment shall submit to and obtain approval from the Regional Administrator, a plan for closure in accordance with the requirements of § 265.228 and part 265 subpart G. This plan shall provide for major slope stability, include a schedule for the plan's implementation, and contain provisions to preclude the probability of future impoundment of water.

§ 265.1306 Landfills.

(a) Owners or operators of new CCR landfills and lateral expansions of existing landfills are exempt from the double liner and leachate collection system requirements of § 265.301(c), and the requirements of § 265.302, provided the owner or operator is in compliance with the requirements of paragraph (b) of this section. Owners or operators of existing landfills are also exempt from the liner requirements of paragraph (b)(1) of this section, provided they comply with the requirements of paragraph (c) of this section and the requirements at 40 CFR part 265 subparts F, G, H, and N.

(b) Prior to placement of CCRs in new landfills and lateral expansions, new landfills and lateral expansions shall be constructed:

(1) With a composite liner, as defined in paragraph (b)(2) of this section, and a leachate collection and removal system that is designed and constructed to maintain less than a 30-cm depth of leachate over the liner.

(2) For purposes of this subpart, composite liner means a system consisting of two components; the upper component must consist of a minimum 30-mil flexible membrane liner (FML), and the lower component must consist of at least a two-foot layer of compacted soil with a hydraulic conductivity of no more than 1×10^{-7} cm/sec. FML components consisting of high density polyethylene (HDPE) shall be at least 60-mil thick. The FML component must be installed in direct and uniform contact with the compacted soil component.

(3) For purposes of this subpart, hydraulic conductivity means the rate at which water can move through a permeable medium. (*i.e.,* the coefficient of permeability.)

(c) Effective [date two years after the effective date of the final rule], all existing landfills that receive CCRs shall be operated and maintained with:

(1) A run-on control system to prevent flow onto the active portion of the CCR landfill during the peak discharge from a 24-hour, 25-year storm;

(2) A run-off control system from the active portion of the CCR landfill to collect and control at least the water volume resulting from a 24-hour, 25-year storm. Run-off from the active portion of the CCR landfill must be handled in accordance with § 265.1307 of this subpart.

§ 265.1307 Surface water requirements.

(a) Permits for CCR surface impoundments and CCR landfills shall include conditions to ensure that:

(1) The operation of the unit will not cause any violation of any requirements of the Clean Water Act, including, but not limited to, the National Pollutant Discharge Elimination System (NPDES) requirements, pursuant to section 402 of the Clean Water Act.

(2) The operation of the unit will not cause any violation of any requirement of an area-wide or state-wide water quality management plan that has been approved under section 208 or 319 of the Clean Water Act, as amended.

(b) [Reserved]

§ 265.1308 Air requirements.

(a) CCR surface impoundments and CCR landfills must be managed in a manner that fugitive dusts do not exceed 35 $\mu g/m^3$, unless an alternative standard has been established by the Regional Administrator.

(b) CCR surface impoundments must be managed to control wind dispersal of dusts consistent with the standard in paragraph (a) of this section unless an alternative standard has been established by the Regional Administrator.

(c) CCR landfills must be managed to control wind dispersal of dusts consistent with the standard in paragraph (a) of this section unless an alternative standard has been established by the Regional Administrator. CCRs placed in landfills as wet conditioned CCRs shall not result in the formation of free liquids.

(d) Tanks, containers, buildings and pads used for the storage must be managed to control the dispersal of dust. Pads must have wind protection that will ensure comparable levels of control.

(e) CCRs transported in trucks or other vehicles must be covered or otherwise

managed to control the wind dispersal of dust consistent with the standard in paragraph (a) of this section unless an alternative standard has been established by the Regional Administrator.

PART 268—LAND DISPOSAL RESTRICTIONS

18. The authority citation for part 268 continues to read as follows:

Authority: 42 U.S.C. 6905, 6912(a), 6921, and 6924.

19. Section 268.2 is amended by revising paragraph (f) to read as follows:

§ 268.2 Definitions applicable in this part.

* * * * *

(f) Wastewaters are wastes that contain less than 1% by weight total organic carbon (TOC) and less than 1% by weight total suspended solids (TSS), except for coal combustion residuals, [waste code S001], which are wastewaters if the moisture content exceeds 50%.

* * * * *

20. Section 268.14 is amended by adding paragraph (d) to read as follows:

§ 268.14 Surface impoundment exemptions.

* * * * *

(d) The waste specified in 40 CFR Part 261 as EPA Special Waste Number S001 may continue to be placed in an existing CCR surface impoundment of this subpart for 60 months after the promulgation date of listing the waste provided the existing CCR surface impoundment is in compliance with the requirements of subpart F of part 265 of this chapter within 12 months after the promulgation of the new listing. Closure in accordance with subpart G of part 264 must be completed within two years after placement of waste in the existing CCR surface impoundment ceases.

21. Section 268.21 is added to Subpart C to read as follows:

§ 268.21 Waste specific prohibitions—Coal combustion residuals.

(a) Effective [date six months after the effective date of the final rule], nonwastewaters specified in 40 CFR part 261 as EPA Special Waste Number S001 are prohibited from land disposal.

(b) Effective [date 60 months after the effective date of the final rule], wastewaters specified in 40 CFR part 261 as EPA Special Waste Number S001 are prohibited from land disposal.

(c) The requirements of paragraphs (a) and (b) of this section do not apply if:

(1) The wastes meet the applicable treatment standards specified in subpart D of this Part;

(2) Persons have been granted an exemption from a prohibition pursuant to a petition under § 268.6, with respect to those wastes and units covered by the petition;

(3) The wastes meet the applicable treatment standards established pursuant to a petition granted under § 268.44;

(4) Persons have been granted an extension to the effective date of a prohibition pursuant to § 268.5, with respect to these wastes covered by the extension.

22. In § 268.40, the table "Treatment Standards for Hazardous Wastes" is amended by adding in alphanumeric order the new entry for S001 to read as follows:

§ 268.40 Applicability of treatment standards.

* * * * *

TREATMENT STANDARDS FOR HAZARDOUS WASTES

[Note: NA means not applicable]

Waste code	Waste description and treatment/ regulatory subcategory [1]	Regulated hazardous constituent		Wastewaters	Nonwastewaters
		Common name	CAS [2] No.	Concentration in mg/L [3], or technology code [4]	Concentration in mg/kg [5] unless noted as "mg/L TCLP", or technology code
*	*	*	*	*	*
S001	Coal combustion wastes generated by the electric power sector. For purposes of this listing, the electric power sector is defined as electricity-only and combined-heat-and-power (CHP) plants whose primary business is to sell electricity, or electricity and heat, to the public; *i.e.,* NAICS code 221112 plants. For the purposes of this listing, coal combustion wastes are defined as fly ash, bottom ash, boiler slag, and flue gas desulfurization materials generated by the electric power sector. This listing does not apply to coal combustion residuals that are: (1) Uniquely associated wastes with wastes from the burning of coal; (2) beneficially used; (3) placed in minefilling operations; (4) generated by facilities that are outside the electric power sector; or (5) generated from clean-up activities that are conducted as part of a state or federally required clean-up that commenced prior to the effective date of this rule..	Antimony	7440–36–0	TSS of 100mg/l and meet § 268.48.	Meet § 268.48.
		Arsenic	7440–38–2		
		Barium	7440–39–3		
		Beryllium	7440–41–7		
		Cadmium	7440–43–9		
		Chromium	7440–47–3		
		Lead	7439–92–1		
		Mercury	7439–97–6		
		Nickel	7440–02–0		
		Selenium	7782–49–2		
		Silver	7440–22–4		
		Thallium	7440–28–0		
*	*	*	*	*	*

Footnotes to Treatment Standard Table 268.40

[1] The waste descriptions provided in this table do not replace waste descriptions in 40 CFR 261. Descriptions of Treatment/Regulatory Subcategories are provided, as needed, to distinguish between applicability of different standards.

[2] CAS means Chemical Abstract Services. When the waste code and/or regulated constituents are described as a combination of a chemical with its salts and/or esters, the CAS number is given for the parent compound only.

[3] Concentration standards for wastewaters are expressed in mg/L and are based on analysis of composite samples.

[4] All treatment standards expressed as a Technology Code or combination of Technology Codes are explained in detail in 40 CFR 268.42 Table 1—Technology Codes and Descriptions of Technology-Based Standards.

[5] Except for Metals (EP or TCLP) and Cyanides (Total and Amenable) the nonwastewater treatment standards expressed as a concentration were established, in part, based upon incineration in units operated in accordance with the technical requirements of 40 CFR Part 264 Subpart O or Part 265 Subpart O, or based upon combustion in fuel substitution units operating in accordance with applicable technical requirements. A facility may comply with these treatment standards according to provisions in 40 CFR 268.40(d). All concentration standards for nonwastewaters are based on analysis of grab samples.

* * * * *

23. In § 268.42, Table 1 is amended by adding an entry for "RSLDS" to read as follows:

§ 268.42 Treatment standards expressed as specified technologies.

* * * * *

TABLE 1—TECHNOLOGY CODES AND DESCRIPTION OF TECHNOLOGY-BASED STANDARDS

Technology code	Description of technology-based standards
* * * * *	
RSLDS	Removal of solids and meet § 268.48 treatment levels.
* * * * *	

* * * * *

PART 271—REQUIREMENTS FOR AUTHORIZATION OF STATE HAZARDOUS WASTE PROGRAMS

24. The authority citation for part 271 continues to read as follows:

Authority: 42 U.S.C. 6905, 6912(a), and 6926.

25. Section 271.1(j) is amended by adding the following entries to Table 1 and Table 2 in chronological order by date of publication to read as follows.

§ 271.1 Purpose and scope.

* * * * *

(j) * * *

TABLE 1—REGULATIONS IMPLEMENTING THE HAZARDOUS AND SOLID WASTE AMENDMENTS OF 1984

Promulgation date	Title of regulation	Federal Register reference	Effective date
* *	* *	* *	* *
[date of signature of final rule]	Listing of Special Waste S001	[Federal Register page numbers for final rule].	[effective date of final rule].

TABLE 2—SELF-IMPLEMENTING PROVISIONS OF THE SOLID WASTE AMENDMENTS OF 1984

Effective date	Self-implementing provision	RCRA citation	Federal Register reference
* *	* *	* *	* *
[effective date of final rule].	Prohibition on land disposal of S001 waste with free liquids and prohibition on the disposal of S001 waste below the natural water table. For purposes of this provision, free liquids means liquids which readily separate from the solid portion of a waste under ambient temperature and pressure.	3001(b)(3)(A) and 3004(g)(4)(C).	[date of publication date of final rule Federal Register page numbers] [FR page numbers].

PART 302—DESIGNATION, REPORTABLE QUANTITIES, AND NOTIFICATION

26. The authority citation for part 302 continues to read as follows:

Authority: 42 U.S.C. 9602, 9603, and 9604; 33 U.S.C. 1321 and 1361.

27. In § 302.4, Table 302.4 is amended by adding the following new entry in alphanumeric order to the table to read as follows:

§ 302.4 Designation of hazardous substances.

* * * * *

TABLE 302.4—LIST OF HAZARDOUS SUBSTANCES AND REPORTABLE QUANTITIES

[Note: All comments/notes are located at the end of this table]

Hazardous substance	CASRN	Statutory code†	RCRA waste No.	Final RQ pounds (Kg)
* *	* * *	*		*
S001[f] Coal combustion residuals generated by the electric power sector (Electric Utilities and Independent Power Producers)	.....	4	S001	1 (0. 4536)

TABLE 302.4—LIST OF HAZARDOUS SUBSTANCES AND REPORTABLE QUANTITIES—Continued

[Note: All comments/notes are located at the end of this table]

Hazardous substance	CASRN	Statutory code†	RCRA waste No.	Final RQ pounds (Kg)
*	*	*	*	*

† Indicates the statutory source defined by 1, 2, 3, and 4, as described in the note preceding Table 302.4.

* * * * *

[f] *See* 40 CFR 302.6(b)(1) for application of the mixture rule to this hazardous waste.

* * * * *

28. Section 302.6 is amended by amending paragraph (b)(1)(iii), including the Table, to read as follows:

§ 302.6 Notification requirements.

* * * * *

(b) * * *

(1) * * *

(iii) For waste streams K169, K170, K171, K172, K174, K175, and S001, knowledge of the quantity of all of the hazardous constituent(s) may be assumed, based on the following maximum observed constituent concentrations identified by EPA:

Waste	Constituent	Max ppm
K169	Benzene	220.0
K170	Benzene	1.2
	Benzo (a) pyrene	230.0
	Dibenz (a,h) anthracene	49.0
	Benzo (a) anthracene	390.0
	Benzo (b) fluoranthene	110.0
	Benzo (k) fluoranthene	110.0
	3–Methylcholanthrene	27.0
	7,12–Dimethylbenz (a) anthracene	1,200.0
K171	Benzene	500.0
	Arsenic	1,600.0
K172	Benzene	100.0
	Arsenic	730.0
K174	2,3,7,8TCDD	0.000039
	1,2,3,7,8–PeCDD	0.0000108
	1,2,3,4,7,8–HxCDD	0.0000241
	1,2,3,6,7,8–HxCDD	0.000083
	1,2,3,7,8,9–HxCDD	0.000062
	1,2,3,4,6,7,8–HpCDD	0.00123
	OCDD	0.0129
	2,3,7,8–TCDF	0.000145
	1,2,3,7,8–PeCDF	0.0000777
	2,3,4,7,8–PeCDF	0.000127
	1,2,3,4,7,8–HxCDF	0.001425
	1,2,3,6,7,8–HxCDF	0.000281
	1,2,3,7,8,9–HxCDF	0.00014
	2,3,4,6,7,8–HxCDF	0.000648
	1,2,3,4,6,7,8–HpCDF	0.0207
	1,2,3,4,7,8,9–HpCDF	0.0135
	OCDF	0.212
K175	Mercury	9,200
S001	Antimony	3,100
	Arsenic	773
	Barium	7,230
	Beryllium	31
	Cadmium	760
	Chromium	5,970
	Lead	1,453
	Mercury	384
	Nickel	6,301
	Selenium	673
	Silver	338
	Thallium	100

* * * * *

[FR Doc. 2010–12286 Filed 6–18–10; 8:45 am]

BILLING CODE 6560–50–P

Federal Register

Monday,
June 21, 2010

Part III

Consumer Product Safety Commission

16 CFR Parts 1216 and 1500

Safety Standard for Infant Walkers; Revocation of Regulations Banning Certain Baby-Walkers; Third Party Testing for Certain Children's Products; Infant Walkers: Requirements for Accreditation of Third Party Conformity Assessment Bodies and Agency Information Collection Activities; Proposed Collection; Comment Request; Final Rules and Notice

CONSUMER PRODUCT SAFETY COMMISSION

16 CFR Part 1216

[CPSC Docket No. CPSC–2009–0066]

Safety Standard for Infant Walkers: Final Rule

AGENCY: Consumer Product Safety Commission.

ACTION: Final rule.

SUMMARY: Section 104(b) of the Consumer Product Safety Improvement Act of 2008 ("CPSIA") requires the United States Consumer Product Safety Commission ("CPSC" or "Commission") to promulgate consumer product safety standards for durable infant or toddler products. These standards are to be "substantially the same as" applicable voluntary standards or more stringent than the voluntary standard if the Commission concludes that more stringent requirements would further reduce the risk of injury associated with the product. The Commission is issuing a safety standard for infant walkers in response to the direction under section 104(b) of the CPSIA.[1]

DATES: The rule will become effective on December 21, 2010 and apply to products manufactured or imported on or after that date. The incorporation by reference of the publication listed in this rule is approved by the Director of the Federal Register as of December 21, 2010.

FOR FURTHER INFORMATION CONTACT: Carolyn Manley, Office of Compliance and Field Operations, Directorate for Engineering Sciences, Consumer Product Safety Commission, 4330 East West Highway, Bethesda, MD 20814; telephone (301) 504–7607; *cmanley@cpsc.gov.*

SUPPLEMENTARY INFORMATION:

A. Background and Statutory Authority

The Consumer Product Safety Improvement Act of 2008 ("CPSIA", Pub. L. 110–314) was enacted on August 14, 2008. Section 104(b) of the CPSIA requires the Commission to promulgate consumer product safety standards for durable infant or toddler products. These standards are to be "substantially the same as" applicable voluntary standards or more stringent than the voluntary standard if the Commission concludes that more stringent requirements would further reduce the risk of injury associated with the product. Section 104(b)(2) of the CPSIA directs the Commission to begin rulemaking for two standards by August 14, 2009. Under this provision, the Commission published a proposed standard for infant walkers in the **Federal Register** on September 3, 2009. 74 FR 45704. The standard is substantially the same as a voluntary standard developed by ASTM International (formerly known as the American Society for Testing and Materials), ASTM F 977–07, *Standard Consumer Safety Specification for Infant Walkers,* but with several modifications that strengthen the standard in order to reduce the risk of injury associated with walkers.

There are existing mandatory regulations applicable to baby bouncers, walker-jumpers, and baby walkers, which were originally issued in 1971 by the Food and Drug Administration. 16 CFR 1500.18(a)(6) and 16 CFR 1500.86(a)(4). These regulations do not address hazards associated with falls down stairs, structural integrity, occupant retention, or loading/stability issues. The ASTM F 977–07 standard contains provisions that the mandatory regulations lack or requirements that are more stringent than the mandatory standard. On September 3, 2009, the Commission proposed to revoke the existing CPSC regulations for baby bouncers, baby jumpers and walkers. As explained elsewhere in this issue of the **Federal Register**, the Commission has determined to revoke the existing regulations only with regard to walkers. They will remain in effect for baby bouncers and baby jumpers.

B. The Product

Infant walkers are used to support very young children before they are walking (usually 6 to 15 months old). ASTM F 977–07 defines "walker" as "a mobile unit that enables a child to move on a horizontal surface when propelled by the child sitting or standing within the walker, and that is in the manufacturer's recommended use position." Children may use walkers to sit, recline, bounce, jump, and use their feet to move around. Walkers typically consist of fabric seats attached to rigid trays. The trays are fastened to bases that have wheels or casters to make them mobile.

Currently, there are at least seven manufacturers or importers supplying walkers to the United States market (four domestic manufacturers, two foreign manufacturers with divisions in the United States, and one domestic importer).

All known suppliers of infant walkers are members of the Juvenile Products Manufacturers Association ("JPMA"), the major United States trade association that represents juvenile product manufacturers and importers. Each supplies a variety of children's products, of which walkers are only a small proportion. Infant walkers are available in many countries besides the United States, including China, the United Kingdom, and Australia. Therefore, any foreign manufacturer is a potential supplier to the United States market, either directly or indirectly through an importer.

Infant walkers made by all of the domestic manufacturers supplying walkers to the United States market are JPMA certified as compliant with the ASTM voluntary standard. Based on limited CPSC staff testing, CPSC staff does not believe that the two foreign manufacturers and the domestic importer are making walkers that are compliant with the voluntary standard.

Sales of infant walkers peaked in the early 1990s at less than 2 million annually. By 2005, however, annual walker sales had fallen to around 600,000. Following a similar pattern, walkers in use (the number of walkers estimated to still be in use, regardless of when sold) peaked in the mid-1990s, but have since fallen sharply as well (by 55 percent between 1996 and 2005). As of 2005, the estimated number of walkers in use was probably less than 2 million.

C. Incident Data

The preamble to the proposed rule summarized incident data involving walkers. There has been no change in the fatality reports or injury estimates related to walkers since publication of the proposed rule. That information is repeated below.

1. Injury Estimates

There were an estimated total of 14,900 (an annual average of 3,000) injuries related to infant walkers among children under the age of 15 months that were treated in hospital emergency departments in the United States over the five-year period 2004–2008.[2] (This estimate has been adjusted to exclude jumpers from the walker code.) No deaths were reported through NEISS.

[1] The Commission voted 5–0 to approve publication of this rule. Commissioner Thomas Moore filed a statement concerning this action which may be viewed on the Commission's Web site at *http://www.cpsc.gov/pr/statements.html* or obtained from the Commission's Office of the Secretary.

[2] The source of injury estimates is the National Electronic Injury Surveillance System ("NEISS"), a statistically valid injury surveillance system based on data gathered from emergency departments of hospitals selected as a probability sample of all the United States hospitals with emergency departments.

There was no statistically significant increase or decrease observed in the estimated injuries from one year to the next, nor was there any statistically significant trend observed over the 2004–2008 period. For injuries requiring emergency department treatment that were related to infant walkers, the following characteristics occurred most frequently based on an annual average:

- Hazard—falls either out of the walker or down stairs/to a lower level while in the walker (62%).
- Injured body part—head (45%) and face (27%).
- Injury type—contusions/abrasions (37%) and internal organ injury (28%).
- Disposition—treated and released (90%) and hospitalized (5%).

For approximately 72 percent of the injuries reported, the walker was directly involved in the incident (such as the walker falling down stairs, tipping over, collapsing). However, many (nearly 20 percent) of the injuries treated in emergency departments were not necessarily caused by failures of the walkers.

As discussed in the preamble to the proposed rule (74 FR at 45705), the stair fall protection provisions in the ASTM standard dramatically affected incidents related to walkers (an 88% decrease in estimated incidents related to walkers treated in emergency rooms from 1994 to 2008). However, the stair fall hazard remains the most prevalent hazard in incidents related to walkers with some of these incidents involving walkers that do not comply with the voluntary standard, damaged or worn walkers, or children who are strong enough to lift the walker and defeat the stair fall protection.

2. Fatalities

CPSC staff has reports of eight fatal incidents involving an infant in a walker during the five year period 2004 to 2008.[3] One of these appears to involve a stair fall incident. The walker involved did not conform to the ASTM walker standard's stair fall performance requirements and had been under recall at the time of the death (due to the lack of stair fall protection). There were three deaths that resulted from accidental drowning when the child moved in a walker into a residential pool or spa. Two of these three deaths involved walkers that were certified to the JPMA standard, though pictures showed that one of the walkers was missing a wheel. The physical condition of the other walker is unknown. The circumstances of the remaining four deaths varied and involved circumstances unrelated to falls (*i.e.,* a slow cooker overturned on an infant in a walker who pulled the cord of the cooker, an infant pulled a heavy dining chair on himself, an infant rolled down a driveway and struck a moving vehicle, and an infant aspirated a screw while seated in a walker).

3. Non-Fatal Injuries

A total of 78 non-fatal injuries were reported to have occurred between 2004 and 2008. All of these injuries occurred when the infant was seated in a walker. The leading cause of injury (about 42% of the injuries) was falls down the stairs or to a lower level. The next major cause of injury was product failure, either structural or mechanical failure of the walker, and these accounted for another 37% of the incidents. The attached toys, toy bars, or toy trays on the walker caused another 17% of the injuries, such as lacerations, abrasions, pinching, etc. Three percent of the non-fatal reported injuries were serious burn injuries resulting from infants pulling cords of small cooking appliances and spilling hot liquids onto themselves. Finally, one percent of the reported incidents did not specify the injury.

D. Voluntary Standards

1. ASTM Voluntary Standard

ASTM F 977, *Standard Consumer Safety Specification for Infant Walkers,* was first published in 1986 and was revised in 1997 to address the stair fall hazard. The Commission's proposed rule, published September 3, 2009, was based on the 2007 version of the ASTM standard, ASTM F 977–07. In December 2009, ASTM published a revision to the infant walker standard, F 977–09. This revision included some of the changes in the Commission's proposed rule, but not the majority of them. The 2009 revision of the ASTM standard also included a significant change to the rearward facing stair fall test procedure for open back frame walker models. This test procedure was different from the test procedure the Commission proposed for these types of walkers. The proposed rule would require using a 1-inch aluminum angle firmly attached to the walker frame. The ASTM '09 version uses loops of cord and a lightweight floating bar. Because this method of attachment may not remain taut throughout the stair fall test, this procedure in the ASTM '09 version is not as stringent as the test method the Commission proposed for these types of walkers. For this reason, the final rule incorporates by reference ASTM F 977–07 rather than the 2009 revision.

JPMA provides certification programs for juvenile products, including infant walkers. Manufacturers submit their products to an independent testing laboratory to test the product for conformance to the ASTM standard. Currently, infant walkers from five manufacturers are JPMA certified as being in compliance with the ASTM standard.

The ASTM standard includes performance requirements specific to infant walkers, general performance requirements, and labeling requirements. The key provisions of the ASTM infant walker standard include the following:

- Prevention of falls down stairs—intended to ensure that a walker will not fall down stairs when facing front, back, and sideways.
- Tipping resistance—intended to ensure that walkers are stable and do not tip over when on a flat surface; includes tests for forward and rear tip resistance, as well as for the occupant leaning over the front.
- Dynamic and static load testing on seating area—intended to ensure that the child remains fully supported while stationary and while bouncing/jumping.
- Occupant retention—intended to prevent entrapment by setting requirements for leg openings.

The ASTM standard also includes: (1) Torque and tension tests to assure that components cannot be removed; (2) requirements for several walker features to prevent entrapment and cuts (minimum and maximum opening size, accessible coil springs, leg openings, and edges that can scissor, shear, or pinch); (3) latching/locking mechanism requirements to assure that walkers do not accidentally fold while in use; (4) requirements for the permanency and adhesion of labels; and (5) requirements for instructional literature.

The stair fall protection requirement, also called the step test, is the key provision in the ASTM standard. For this test, a walker with a Civil Aeromedical Institute infant dummy (Mark II) (subsequently referred to as "CAMI dummy") is placed in the walker's seat which is propelled with a horizontal dynamic force by means of a pulley, rope, and a falling 8-pound weight on a hardwood floor surface. The walker passes the test if it stays on the test table which has a hardwood floor surface. It fails the test if the walker completely falls off the table surface.

The step test in the ASTM F 977–07 standard is based on the assumption that an average walker weighs 8 pounds. However, when CPSC staff weighed five

[3] The reported fatalities and non-fatalities are neither a complete count of all incidents that occurred during the period nor a sample of known probability of selection.

2008 to 2009 model walkers, the weight values ranged from 11 to 14 pounds. Computing the launching distance "d" as described in section 7.6 of ASTM F 977–07 depends on the weight of the walker, the weight of the CAMI dummy, the weight of the CAMI vest, the coefficient of friction between the walker wheels and the test table surface, and the maximum velocity at the edge of the test table platform (4 ft/sec or 2 ft/sec). According to section 7.6 of ASTM F 977–07, the d value for the forward and rearward directions with only the CAMI dummy seated in the walker is 14.6 inches. The d value for the forward and rearward directions with the CAMI dummy fitted with the 11-pound vest seated in the walker is 21.2 inches. The values of 14.6 inches and 21.2 inches were based on the assumption that the walker weight is 8 pounds. As in the proposed rule, the final rule requires calculation of the launching distance using the actual weight of the walker.

In the ASTM F 977–07 standard, most of the hardware and test apparatus components are not specified. Variability in the type and size of the pulley, rope type, test table flexure etc. can lead to different test results. Two different labs could test the same model walker and obtain different results. As in the proposed rule, the final rule adds specificity to these requirements.

2. European Standard EN 1273:2005

CPSC staff evaluated EN 1273:2005 European Standard and its two performance tests that are not in the ASTM F 977–07: the 30° incline plane stability test and the parking device test.

The Commission proposed adding the 30° incline plane test, which is a standard stability test common in several EN children's product safety standards, to the walker mandatory standard. In this test, the walker, occupied by a 26.4 lb (12 kg) test mass is placed on a sloping platform inclined at 30° to the horizontal with a stop on the lower edge of the slope. The walker must not tip over. As explained in part F.2 of the preamble, the Commission is not including this test in the final rule.

The parking device test is only applicable to walkers that are equipped with a parking brake. It essentially requires conducting a semi-static version of the stair fall test, but with the parking device engaged. The walker must not move more than 1.97 inches (50 mm) in order to pass. The Commission proposed adding this test, and the final rule retains this addition.

E. Response to Comments on the Proposed Rule

CPSC received seven comments regarding the proposed rule for infant walkers, including five from individuals, one from JPMA, and one from various consumer groups, including Consumers Union, Consumer Federation of America, and Kids in Danger. These comments and the Commission's responses are discussed below.

1. Parking Brake Requirement and Warning

a. *Comment:* One commenter remarked that the parking brake requirement should be more stringent because parking brakes should keep the walker completely stationary and also commented that the proposed warning in the proposed rule is contradictory to the perception of a parking brake's function. Another commenter recommended requiring parking brakes for all infant walkers.

Response: CPSC believes that the purpose of the parking brake warning is to alert the caregiver that the parking brake is used for *temporarily* preventing the walker from moving. In several ASTM meetings, some infant walker manufacturers have characterized the purpose of the parking brakes as such, and that the child in the walker must always be kept in view. The parking brake feature is added on some models for convenience to the caregiver. The parking brake is not meant to keep a child in the walker indefinitely without supervision. Also, the warning is meant to prevent any false sense of security by the caregiver. CPSC believes the proposed warning and the performance requirements as they appeared in the proposed rule are adequate.

b. *Comment:* One commenter supported the concept for having a performance test for walkers with parking brakes, but disagreed with the proposal to adopt the EN 1273:2005 European Standard's test for parking brakes. The performance test is similar to that of the stair fall test, except that the 8-pound weight guided by a rope and pulley is released gradually and there is no set launching distance. Upon completion of the gradual 8-pound force application, the maximum allowable displacement (*i.e.,* movement) of the walker is 1.97 inches. The commenter argued that a lack of incidents involving parking devices supports its argument. In addition, the commenter compared the proposed parking device test to the ASTM F 2012, *Standard for Stationary Activity Centers.* The commenter asserted that a stationary activity center is similar to that of an infant walker with its parking brakes engaged. Based on this comparison to stationary activity centers, the commenter advocated increasing the maximum allowable displacement to 6 inches in accordance with ASTM F 2012.

Response: CPSC believes that if a product is equipped with a feature, such as a parking brake, that feature should function properly and safely. Although CPSC is not aware of any incidents involving parking devices in the United States, the Commission believes that requiring the parking brake test is appropriate for the following reasons.

There are important distinctions between walkers and stationary activity centers. An infant in a walker tends to exert a horizontal force to propel himself or herself horizontally, whereas a child in a stationary activity center may not necessarily exert the same type of horizontally concentrated forces because the infant may be preoccupied jumping up and down, spinning about the seat, and playing with toys. The parking brake performance test should set limits on the displacement of the walker in the horizontal direction to resist motion when the parking brakes are engaged. The appropriate amount of force should be applied. Furthermore, upon comparison between ASTM F 2012 and EN 1273:2005, CPSC staff noted the following observations:

- A force gauge is used to apply the 8-pound force in ASTM F 2012 instead of a rope and pulley guided 8-pound weight as specified in EN 1273:2005. In the EN 1273:2005 test, the 8-pound weight is released gradually over a 5 second period and then hung from the test assembly for 1 minute. Arguably, the force of gravity is more consistent than a test technician applying a consistent rate of 8 pounds over a 10 second period (as in the ASTM F 2012 test). The longer duration of 1 minute is more stringent than 10 seconds.
- The location application of the 8-pound force in ASTM F 2012 has infinite variability as it is any location 2 inches above the floor level. The EN 1273:2005 standard requires the rope to be secured onto the bottom frame member of the infant walker which is arguably more consistent.
- In the "Rationale" section of ASTM F 2012, there is no mention of how the maximum allowable limit for displacement of 6 inches per minute was obtained.

EN 1273:2005's maximum allowable 1.97-inch displacement is more stringent than ASTM F 2012's 6 inches. Moreover, CPSC's adoption of this performance test would harmonize with

the European EN 1273:2005 Standard for this requirement.

The Commission notes that this performance test is required only for infant walker models equipped with parking devices. Manufacturers can choose to exclude parking devices from their product.

The final rule retains the EN 1273:2005 performance test and maximum allowable displacement for 1.97 inches (CPSC staff assumes the commenter referred to 2 inches in its discussions for convenience) for parking devices as it was proposed in the proposed rule, except for an editorial change (discussed in the next response) to address some walkers that have fixed direction rear wheels.

c. *Comment:* The same commenter observed that the parking brake test, as written in the proposed rule, may present problems for measuring the displacement for walkers that have fixed direction wheels in the rear of the walker. With these types of wheels, the walker has a natural tendency to travel in a curved path instead of in a straight path. A walker with four casters does not have this issue.

Response: To address this subset of walkers, the final rule adds the following new paragraph to the language the Commission previously proposed for the sideward facing test of parking devices:

> If the walker is equipped with fixed direction rear wheels and the walker is displaced in a curved path, establish the location of the rope attachment as the reference point and measure the linear displacement of that reference point after performing the procedure as described in paragraph (c)(3)(iii)(A) and (B).

2. The 30° Incline Plane Test

Comment: One commenter favored maintaining the cantilevered stability test as described in Section 7.3.4 of the ASTM F 977–07 Standard for infant walkers, and advocated eliminating the additional CPSC proposed 30° incline plane stability test to address tip over hazards.

Response: From the time CPSC staff recommended the 30° incline plane test (based on EN 1273:2005), numerous discussions about the added benefits of the 30° incline plane stability test have occurred among CPSC staff and ASTM. Over the past year, these discussions have taken place at ASTM headquarters, as well as in conference calls. A JPMA member was tasked to perform analyses on the two test methods to determine if the 30° incline plane test is needed. During ASTM's presentation at the October 13, 2009 meeting, the JPMA member demonstrated using real examples that Section 7.3.4 stability test of the ASTM F 977–07 Standard is adequate and that the 30° incline plane test is not needed. The analyses included a comparison of the two stability test methods using the dimensions of an exemplar walker and concluded that the 30° incline plane test was not as severe as the Section 7.3.4 stability test. CPSC staff concurred with this presentation and the comparison of stability test methods. Therefore, the final rule does not include the 30° incline plane test that was in the proposed rule.

3. Adding Calculation To Determine Launching Distance To Step Test Procedures

Comment: One commenter objected to the proposed rule's proposal to change the fixed distances in the step test to a computed value for d which will vary due to the weight of the test sample walkers. The commenter asserted that increasing the launching distance for heavier walkers is not necessary or is "self correcting" because a child seated in the heavier walker will naturally not move as fast. The commenter requested keeping the launching distances as they are in Table 1 of Section 7.6 of the ASTM F 977–07 Standard. The commenter also commented that no incident data indicates a need to change velocities in the step test.

Response: As discussed in the preamble to the proposed rule (74 FR at 45706), the Commission believes that the step test requirements should be modified to account for heavier modern walkers. The 8-pound walker used to develop the ASTM step requirement for the original 1997 standard is now outdated because the average modern walker is heavier than 8 pounds.

The critical parameter of the step test is the velocity of a walker with a child in it. CPSC staff believes that it would be more robust to assume that the child maintains a 4 feet/second top speed, regardless of the walker's weight. CPSC staff showed that children can achieve 4 feet/second in an 8-pound walker (1996 ASTM Working Group) and in a 10.5-pound walker (2000 Austrian study [4]). (Both of these studies were based on small sample sizes of 7 and 5 children, respectively.) Stair fall incidents continue to occur, and some involve modern walkers that meet the ASTM requirements. Since the child/walker speed is the critical factor in determining stopping distance of a moving walker at the edge of the step, CPSC staff believes that a 4 feet/second velocity should be maintained regardless of the walker's weight. This necessitates using the walker's actual weight in the calculation for the stair fall test.

With regard to incident data supporting the change, a special study conducted by CPSC indicates that several reported incidents involved walkers that were manufactured to comply with the ASTM stair step requirement and were reported to have been in good condition at the time of the incident. In addition, a review of a list compiled by CPSC staff of over 200 incidents (reported through sources other than NEISS) involving infant walkers from 1999 to 2008 indicates that over 40 percent of those incidents involved stair falls, including one death which occurred due to a fractured skull.

CPSC staff's review of the data has also shown that popular larger, heavier models (greater than 8 pounds) manufactured after 1998 were involved in stair falls. For example, in incident 081112HEP9038, a 10-month old male fell down a set of steps when he traveled past an unlatched gate; the child required a trip to the emergency room. In incident 081113HEP9029, an 11-month old male fell down a set of stairs and was found upside down still in the walker. Both incidents involved walkers made by a leading manufacturer. Both incidents occurred from 2007 to 2008, and both walkers were equipped with friction strips. Therefore, the data show that modern walkers continue to be involved in stair fall incidents. If a walker is traveling too fast, even if it is equipped with friction strips, it may fall down a set of steps. By increasing this launching distance, the Commission is making the standard stricter, which should result in walkers that are made to be safer when traveling at faster speeds.

4. Impact of Change to Step Test

Comment: The same commenter stated that using a calculation in the step test would be a substantial change and would affect the outcome of the test results for walkers that pass the requirement.

Response: Based on limited testing by CPSC staff, the Commission believes that some manufacturers will not need to make changes to their product. CPSC staff agrees that some manufacturers will have to modify their product. However, these changes are feasible. Possible modifications could include increasing the rolling friction within the walker's wheels, reducing the walker

[4] "Baby Walking Frames—Final Report," Consumer Council Austrian Standards Institute in co-operation with Association for Consumer Information, European Committee For Standardization, CEN/TC 252/WG 1 N. 255 February 2001.

weight, or refining the friction strip design.

5. CAMI Dummy Head Position

Comment: One commenter requested CPSC to consider specifying how the CAMI dummy is to "be positioned and restrained during testing so that the center of gravity will be consistent from lab to lab."

Response: CPSC agrees in principle that it is plausible that a CAMI dummy's flexibility properties may change over time and use. Last year, round robin testing was done by CPSC staff, several manufacturers, and a testing laboratory. In addition to pass/fail testing, quantitative measurements were made, measuring the displacement of the walker relative to the edge of the test table. Testing done by CPSC staff did not show any substantial variability in the CPSC test results when the CAMI dummy's head was not secured. However, many other parameters, such as rope type, pulley type, and the spring rate for the pulley mounting bracket, were standardized. Furthermore, the CPSC standard provides additional specificity concerning the CAMI positioning: arms positioned on top of the toy tray, use of the standardized military rope to secure the legs, *etc.* Securing the CAMI head in a most rearward or forward position could possibly produce different results, depending on the flexibility of the dummy. Thus, CPSC staff believes that the CAMI head should not be secured. When the CAMI is positioned as described in the proposed (and final) procedure, the CAMI head movement, while it exists, is minimized to the extent possible. Thus, the final rule, like the proposed rule, provides for the CAMI head to remain unrestrained during all the step tests.

6. Friction Pad Wear and Tear

Comment: The same commenter asked the CPSC to consider the affect of wear and tear as well as dirt and dust on the walker's compliance with the step test.

Response The final rule does not include any additional performance requirements involving step tests with worn friction strips. Although CPSC recognizes that friction pad wear may reduce the pad's effectiveness, this may not be the case for all walker friction pads. Some pads may last longer than others. Assessing the amount of wear and standardizing the wear characteristics may be somewhat subjective. Given the variation between friction pad vendors and the changing compositions of the rubber used in the friction pads, it may be difficult to standardize this aspect of the test. The final standard includes other changes that address the stair fall hazard, such as increasing the input kinetic energy for heavier walkers (*i.e.,* walkers heavier than 8 pounds would need to be launched from a longer distance to achieve the target terminal velocities). In an indirect way, setting the higher input kinetic energy requirement for heavier walkers creates revised design criteria for walker manufacturers. One area where those manufacturers can address the resistance to stair falls may lie in revisions to the friction pad design. CPSC staff believes standardizing the target velocity will have an important impact on the actual test, as the kinetic energy of the walker and CAMI dummy is proportional to the square of the velocity. Furthermore, each walker will be subjected to 18 impacts which will sufficiently subject the sample walkers to abuse (3 directions × 2 configurations with and without vest × 3 replicates). For these reasons, CPSC staff believes there is insufficient data and rationale to add performance requirements involving stair fall tests with worn friction strips.

F. Assessment of Voluntary Standard ASTM F 977–07 and Description of Final Rule

1. Section 104(b) of the CPSIA: Consultation and CPSC Staff Review

Section 104(b) of the CPSIA requires the Commission to assess the effectiveness of the voluntary standard in consultation with representatives of consumer groups, juvenile product manufacturers, and other experts. This consultation process began in October 2008 during the ASTM subcommittee meeting regarding the ASTM infant walker voluntary standard. Consultations between Commission staff and members of this subcommittee have continued and are still ongoing.

As discussed in the preamble to the proposed rule (74 FR at 45706), CPSC staff conducted testing on JPMA certified walkers in order to evaluate the ASTM infant walker standard and develop recommendations for changes to it. The testing focused on the stair fall test in the ASTM standard, a stability performance requirement, and a parking brake requirement (the latter two both taken from EN 1273:2005).

Consistent with section 104(b) of the CPSIA, this rule establishes a new 16 CFR part 1216, "Safety Standard for Infant Walkers." The new part incorporates by reference the requirements for infant walkers in ASTM F 977–07 with certain changes to specific provisions to strengthen the ASTM standard, as discussed in the next section of this preamble, to further reduce the risk of injury. These modifications are similar to the changes the Commission proposed in its September 3, 2009 proposed rule. Differences from the proposed rule are noted in the following section of this preamble.

2. Description of Final Rule Including Changes to the ASTM Standard's Requirements

While most requirements of the ASTM F 977–07 standard are sufficient to reduce the risk of injury posed by infant walkers, the Commission has modified several provisions in the standard to make them more stringent and clarified the test procedures. The following discussion describes the final rule, including changes to the ASTM requirements, and notes any changes from the proposed rule. In addition, some editing and formatting changes have been made which make the final text different from the proposed rule. The Commission made these editing and formatting changes to respond to concerns raised by the Office of the Federal Register; the editing and formatting changes do not alter the substance of the rule.

a. Scope (§ 1216.1)

The final rule states that part 1216 establishes a consumer product safety standard for infant walkers manufactured or imported on or after a date which would be six months after the date of publication of a final rule in the **Federal Register**.

The Commission received no comments on this provision in the proposed rule and is finalizing it without change.

b. Incorporation by Reference (§ 1216.2(a))

Section 1216.2(a) explains that, except as provided in § 1216.2(b), each infant walker must comply with all applicable provisions of ASTM F 977–07, "Standard Consumer Safety Specification for Infant Walkers," which is incorporated by reference. Section 1216.2(a) also provides information on how to obtain a copy of the ASTM standard or to inspect a copy of the standard at the CPSC.

The Commission received no comments on this provision in the proposed rule and is finalizing it without change.

c. Summary of Changes to ASTM F 977–07

The more substantive modifications to the ASTM standard for walkers are

discussed in greater detail in part F.2.d. of this preamble below. A summary of these changes along with the other, more editorial/technical changes that the rule makes to the ASTM standard follows. The final rule:

- Updates the illustration of types of models of walkers in Figure 1 of the ASTM standard to include an open back design (§ 1216.2(b)(1));
- Revises equipment specifications in section 4.6 of the ASTM standard to eliminate brand and model of force gauge and provide performance specifications instead. The proposed rule would have a one year calibration interval. However, the final rule provides a more general interval because a force gauge could go out of calibration before one year. Appropriate calibrations are necessary to maintain accuracy. (§ 1216.2(b)(2));
- Revises Figure 10 of the ASTM standard to show specific rope, other equipment and procedures for the step test (§ 1216.2(b)(15));
- In step test procedures, adds a calculation (discussed below) using the actual weight of the walker to determine the launching distance rather than assuming an 8-pound walker. (§ 1216.2(b)(5)(i), (6)(i), (8)(i), (9)(i)(11), (13)(i), (16)(i), (18)(i));
- In step test procedures, specifies the position for walker wheels (§ 1216.2(b)(6)(i), (11)(i), (16)(i));
- In step test procedures, specifies the position for the CAMI dummy. (§ 1216.2(b)(7)(i));
- In step test procedures, specifies rope type, pulley type, and force to be applied. (§ 1216.2(b)(4)(i), (8)(i), (12)(i), (17)(i));
- In step test procedures, requires each aspect of the test (forward, sideward, and rearward) three times to make it consistent with EN 1273:2005 and allow more confidence in the test results. (§ 1216.2(b)(10)(i), (14)(i), (19)(i));
- Adds the following warning concerning the parking brake if a walker has a parking brake: "WARNING: Parking brake use does not totally prevent walker movement. Always keep child in view when in the walker, even when using the parking brakes." (§ 1216.2(b)(21)(i));
- Revises the stair hazard warning to state: "Block stairs/steps securely before using walker, even when using parking brake." (§ 1216.2(b)(22)(i)); and
- Adds parking device test (§ 1216.2(b)(20)).

d. More Detailed Description of Changes to the ASTM Standard's Step Test

Specification of equipment and procedures. The ASTM F 977–07 standard's step test lacks numerous details which allow for variability in testing that could result in different test results. The Commission proposed specifying the equipment and procedure needed for the test (*e.g.,* type of rope and pulley to be used, orientation of wood grain in the floor). The final rule retains these changes. Additionally, the Commission proposed modifying the test procedure language in several provisions, such as specifying a tolerance for the term "horizontal" (0° ± 0.5°). The final rule retains these changes.

The final rule removes a specification that the test table be 48 inches. This specification appears in a notation in Figure 10 of the ASTM standard. The proposed rule showed figure 10 with the noted 48-inch length table. However, the final rule leaves the length of the test table unspecified so that a test laboratory may use a table of adequate length to accommodate the maximum calculated launching distance d. A test table length of 48 inches may not be sufficient for all walkers once the calculation is based on the actual weight of the walker.

Calculation of launching distance. The Commission proposed a change in the calculation of the launching distance used in the step test. The Commission proposed weighing the walker and computing the appropriate launching distances using the actual weight of the walker.

As discussed in the preamble to the proposed rule (74 FR at 45704) and in this preamble, the launching distances may vary depending on the weight of the walker and the maximum velocity of the walker at the edge of the platform (4 ft/sec or 2 ft/sec). If the walker weight is not appropriately accounted for, then it is possible the target maximum velocity cannot be achieved. For example, if the scenario involved computing distance d where the walker is tested in the forward direction with the CAMI dummy and the walker weight is 14 pounds, distance d would equal 18.0 inches (instead of 14.6 inches if the walker weight value is 8 pounds). The longer distance is needed to achieve the target velocity of 4 feet/second. If a 14-pound walker is launched from 14.6 inches, the walker may not achieve the maximum velocity of 4 feet/second. The final rule retains the distance d calculation with a slight modification that requires the testing lab to measure the weight of the CAMI dummy and vest. This will account for variations in the weight of CAMI dummies and vests.

e. More Detailed Description of Parking Brake Test

The Commission proposed adding the parking brake test of the European Standard EN 1273:2005. The final rule retains this test. It applies to infant walkers that provide parking brakes, but it does not require walkers to have parking brakes. Under this test, the walker is set up to run a quasi-static version of the step test, but with the parking device activated. If the walker moves a distance greater than 1.97 inches (50 mm), the walker fails the requirement. The parking brake test will ensure that, if a walker has a parking brake, it will work effectively.

f. Elimination of 30° Incline Plane Test

The Commission proposed adding the 30° incline plane test from the European Standard EN 1273:2005 for walkers. As discussed more fully in the response to a comment in part E of this preamble, the final rule eliminates this additional requirement because testing and analysis by a JPMA member demonstrated the adequacy of the stability test in the ASTM F 977–07 standard.

G. Effective Date

The Commission proposed that the standard would become effective 6 months after publication of a final rule. The Commission received no comments on the proposed effective date. The final rule provides that the rule will become effective six months after publication and thus will require that infant walkers manufactured or imported on or after that date must meet this standard.

H. Paperwork Reduction Act

Sections 8 and 9 of ASTM F 977–07 contain requirements for marking, labeling and instructional literature that are considered "information collection requirements" under the Paperwork Reduction Act, 44 U.S.C. 3501–3520. In a separate notice elsewhere in this issue of the **Federal Register**, the Commission is publishing a notice requesting comments on this collection of information.

I. Regulatory Flexibility Act

The Regulatory Flexibility Act ("RFA") generally requires that agencies review rules for their potential economic impact on small entities, including small businesses. 5 U.S.C. 604.

1. The Market

There are currently at least seven manufacturers or importers supplying infant walkers to the United States market (four domestic manufacturers,

two foreign manufacturers with divisions in the United States, and one domestic importer). Under Small Business Administration (SBA) guidelines, a manufacturer of infant walkers is small if it has 500 or fewer employees and an importer is considered small if it has 100 or fewer employees. Two domestic manufacturers (a third small manufacturer also sells infant walkers, but based on their current product list is no longer manufacturing them) and one domestic importer known to be supplying the United States market qualify as small businesses under these guidelines. However, CPSC staff believes that there are probably other unknown small importers operating in the United States market as well.

All domestic manufacturers supplying infant walkers to the United States market certify their products as compliant with the ASTM voluntary standard through the JPMA certification program. Based on limited CPSC staff testing, the two foreign manufacturers and the domestic importer are not believed to be complying with the voluntary standard.

2. Impact of the Rule

The changes to the existing stair fall test requirements would reduce variability across manufacturers. Also, because the specific test modifications have been selected to minimize the friction associated with the test procedure, they may effectively add stringency to the tests. It is unknown the extent (if any) to which the modification in the existing stair fall requirements of the voluntary standard will affect infant walkers that now comply with the voluntary standard. However, initial testing shows that the requirements impact the test results of a few walkers. Therefore, it is possible that some manufacturers might need to make walker modifications to comply. Based on staff estimates of the costs of complying with the 1997 stair fall requirements, this cost is unlikely to exceed more than several dollars per unit. Possible modifications include: Increasing the rolling friction within the walker's wheels; reducing the walker weight; and refining the friction strip design.

Infant walkers are not currently required to have parking brakes, nor would they be required to have them under the standard. However, the final rule includes a test of parking brakes, if a walker has them, to assure that they work properly. Initial testing finds that existing walkers have no difficulty in passing this requirement. Therefore, the Commission does not expect it to represent a burden to current manufacturers. However, its inclusion would minimize the risk of walkers with ineffective brakes entering the United States market in the future.

Of the seven firms currently known to be marketing infant walkers in the United States, three are small firms—two small domestic manufacturers and a small domestic importer. We discuss the possible impact of the rule on these entities immediately below.

Small manufacturers. One small domestic manufacturer has annual sales of approximately $31–72.5 million. It currently produces seven walker models and approximately 57 other juvenile products, one of which is a substitute for infant walkers. The second is a small domestic manufacturer with annual sales of approximately $2.5–5 million. Although its annual sales are lower, it is currently producing only one infant walker model and approximately 110 other juvenile products.

The two small domestic manufacturers (which are JPMA certified as compliant with the voluntary standard) may not need to make product modifications. If they do, it will most likely be due to changes needed to comply with the modified stair fall requirements. The costs to these manufacturers are not likely to be substantial, but may increase by as much as several dollars per unit.

Small importers. The only known small domestic importer has annual sales of approximately $2.5–5 million and is not believed to be in compliance with the voluntary standard. Therefore, some product modifications would be necessary. The impact of the infant walker requirements on this importer is unclear, because little is known about the walkers sold by this company. However, the impact is unlikely to be large. Even if the company responded to the rule by discontinuing the import of its non-complying walkers, either replacing them with a complying product or another juvenile product, deciding to import an alternative product would be a reasonable and realistic way to offset any lost revenue from walker sales.

There also may be additional importers of walkers that the staff has been unable to identify. However, the impacts of the rule on these firms, if any, are unknown.

3. Alternatives

Under section 104 of the CPSIA, the primary alternative that would reduce the impact on small entities is to make the voluntary standard mandatory with no modifications. Because the two small domestic manufacturers already meet the requirements of the voluntary standard, adopting the standard without modifications may reduce their costs, but only marginally. Similarly, limiting the requirements of the standard to those already contained in the voluntary standard would probably have little beneficial impact on small importers that do not currently meet the requirements of the voluntary standard. This is because, to these firms, most of the infant walker cost increases would be associated with meeting the requirements of the voluntary standard, rather than the minor additions associated with the Commission's modification of the standard.

4. Conclusion of Final Regulatory Flexibility Analysis

It is not expected that the standard will have a substantial effect on a large number of small firms. In some cases, small firms may not need to make any product modifications to achieve compliance. Even if modifications were necessary, and the cost of developing a compliant product proved to be a barrier for individual firms, the loss of infant walkers as a product category is expected to be minor and would likely be mitigated by increased sales of competing products, such as activity centers, or entirely different juvenile products.

J. Environmental Considerations

The Commission's regulations provide a categorical exclusion for the Commission's rules from any requirement to prepare an environmental assessment or an environmental impact statement as they "have little or no potential for affecting the human environment." 16 CFR 1021.5(c)(1). This rule falls within the categorical exclusion.

K. Preemption

Section 26(a) of the CPSA, 15 U.S.C. 2075(a), provides that where a "consumer product safety standard under [the CPSA]" is in effect and applies to a product, no State or political subdivision of a State may either establish or continue in effect a requirement dealing with the same risk of injury unless the State requirement is identical to the Federal standard. (Section 26(c) of the CPSA also provides that States or political subdivisions of States may apply to the Commission for an exemption from this preemption under certain circumstances.) Section 104(b) of the CPSIA refers to the rules to be issued under that section as "consumer product safety rules," thus implying that the preemptive effect of section 26(a) of the CPSA would apply.

Therefore, a rule issued under section 104 of the CPSIA will invoke the preemptive effect of section 26(a) of the CPSA when it becomes effective.

L. Certification

Section 14(a) of the Consumer Product Safety Act ("CPSA") imposes the requirement that products subject to a consumer product safety rule under the CPSA, or to a similar rule, ban, standard, or regulation under any other act enforced by the Commission, must be certified as complying with all applicable CPSC requirements. 15 U.S.C. 2063(a). Such certification must be based on a test of each product or on a reasonable testing program or, for children's products, on tests on a sufficient number of samples by a third party conformity assessment body accredited by the Commission to test according to the applicable requirements. As discussed above in part K of this preamble, section 104(b)(1)(B) of the CPSIA refers to standards issued under that section, such as the rule for infant walkers established in this final rule, as "consumer product safety standards." By the same reasoning, such standards also would be subject to section 14 of the CPSA. Therefore, any such standard would be considered to be a consumer product safety rule to which products subject to the rule must be certified.

Because infant walkers are children's products, they must be tested by a third party conformity assessment body whose accreditation has been accepted by the Commission. The Commission is issuing a separate notice of requirements to explain how laboratories can become accredited as third party conformity assessment bodies to test to the new safety standard. (Infant walkers also must comply with all other applicable CPSC requirements, such as the lead content requirements of section 101 of the CPSIA, potentially the phthalate content requirements in section 108 of the CPSIA if the walker incorporates a toy component, the tracking label requirement in section 14(a)(5) of the CPSA, and the consumer registration form requirements in section 104 of the CPSIA.)

List of Subjects in 16 CFR 1216

Consumer protection, Incorporation by reference, Imports, Infants and children, Labeling, Law enforcement, and Toys.

■ Therefore, the Commission amends Title 16 of the Code of Federal Regulations by adding part 1216 to read as follows:

PART 1216—SAFETY STANDARD FOR INFANT WALKERS

Sec.

1216.1 Scope.
1216.2 Requirements for infant walkers.

Authority: The Consumer Product Safety Improvement Act of 2008, Pub. L. 110–314, § 104, 122 Stat. 3016 (August 14, 2008).

§ 1216.1 Scope.

This part 1216 establishes a consumer product safety standard for infant walkers manufactured or imported on or after December 21, 2010.

§ 1216.2 Requirements for infant walkers.

(a) Except as provided in paragraph (b) of this section, each infant walker shall comply with all applicable provisions of ASTM F 977–07, Standard Consumer Safety Specification for Infant Walkers, approved April 1, 2007. The Director of the Federal Register approves this incorporation by reference in accordance with 5 U.S.C. 552(a) and 1 CFR part 51. You may obtain a copy from ASTM International, 100 Bar Harbor Drive, P.O. Box 0700, West Conshohocken, PA 19428; telephone 610–832–9585; *http://www.astm.org*. You may inspect a copy at the Office of the Secretary, U.S. Consumer Product Safety Commission, Room 820, 4330 East West Highway, Bethesda, MD 20814, telephone 301–504–7923, or at the National Archives and Records Administration (NARA). For information on the availability of this material at NARA, call 202–741–6030, or go to: *http://www.archives.gov/federal_register/code_of_federal_regulations/ibr_locations.html*.

(b) Comply with the ASTM F 977–07 standard with the following additions or exclusions:

(1) Instead of Figure 1 of ASTM F 977–07, comply with the following:

BILLING CODE 6355–01–P

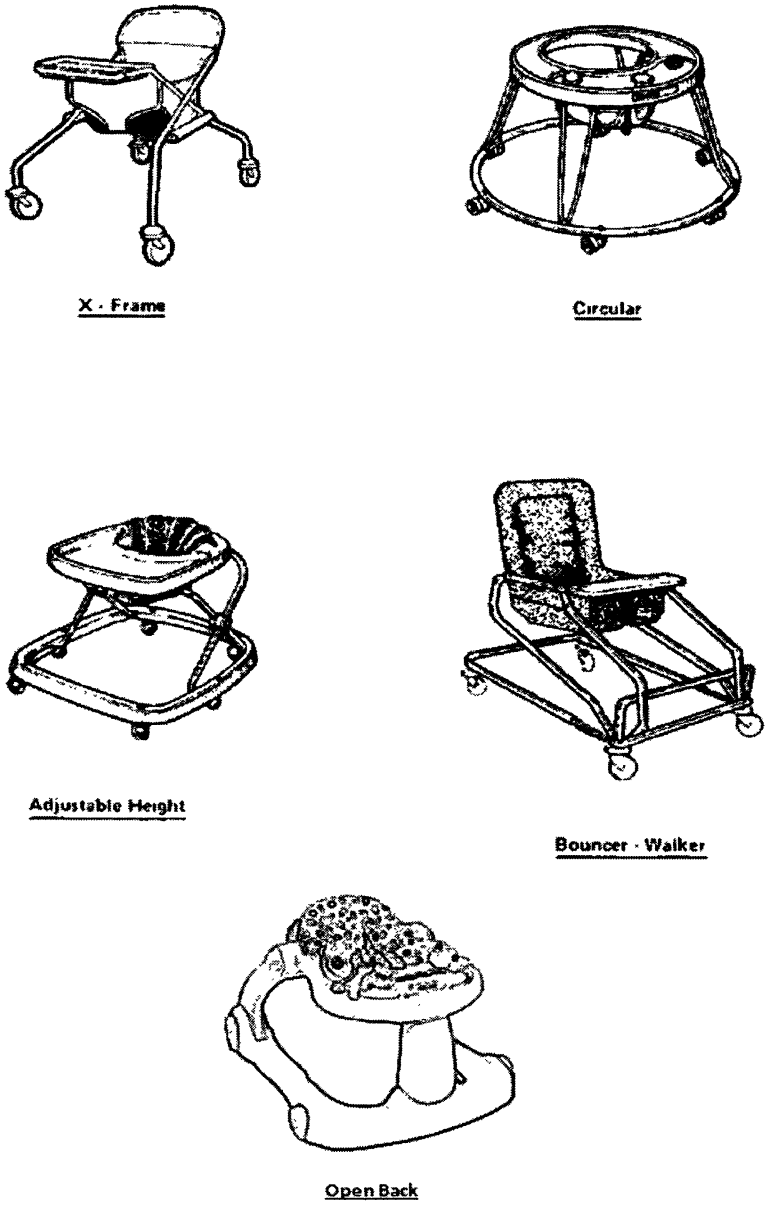

Figure 1 Illustration of Types of Infant Walkers

BILLING CODE 6355–01–C

(2) Instead of complying with section 4.6 through 4.6.8 of ASTM F 977–07, comply with the following:

(i) 4.6 The following guidelines shall apply to force gauges used for testing:

(ii) 4.6.1 *Equipment*—Force gauge with a range of 0 to 25 lbf (110 N), tolerance of ± 0.25 lbf (1.1 N). A calibration interval shall be maintained for the force guage which will ensure that the accuracy does not drift beyond the stated tolerance.

(iii) 4.6.2 *Equipment*—Force gauge with a range 0 to 100 lbf (500 N) tolerance of ± 1 lbf (4.44 N). A calibration shall be maintained for the force gauge which will ensure that the accuracy does not drift beyond the stated tolerance.

(3) In addition to complying with section 6.3 of ASTM F 977–07, comply with the following:

(i) 6.4 *Parking Device (applicable to walkers equipped with parking brakes)*—The walker shall have a maximum displacement of 1.97 inches (50 mm) for each test in each direction (forward, rearward, and sideward) when tested in accordance with 7.7.

(ii) [Reserved]

(4) In addition to complying with section 7.6.1.2 of ASTM F 977–07, comply with the following:

(i) 7.6.1.2 The dummy's head shall remain unrestrained for all the step tests.

(ii) [Reserved]

(5) Following section 7.6.2 of ASTM F 977–07, use the following table instead of Table 1 Summary of Step(s) Tests:

(i) *Table 1 Summary of Step(s) Tests*

Section No.	Facing direction of walker	Weight of CAMI dummy, lb.	Simulated speed, ft/s	Apply tipover test
7.6.3	Forward	17	4	Yes.
7.6.3.6	Forward	28 (vest)	4	Yes.
7.6.4	Sideward	17	2	Yes.
7.6.4.6	Sideward	28 (vest)	2	Yes.
7.6.5	Rearward	17	4	No.
7.6.5.5	Rearward	28 (vest)	4	No.

(ii) [Reserved]

(6) Instead of complying with section 7.6.3.1 of ASTM F 977–07, comply with the following:

(i) 7.6.3.1 Center the walker on the test platform facing forward so that Plane A is perpendicular to the front edge of the platform and the walker is distance *d* from the center of the most forward wheel(s) to the edge of the test platform,

$$d_{CAMI} - \frac{\left(V_f^2 - V_o^2\right) * \left(W_{CAMI} + W_{walker} + W_{drop\ weight}\right)}{2g\left(W_{drop\ weight} - \mu_k N_{CAMI}\right)}$$

Where

V_f = Maximum velocity of walker at edge of platform = 4 ft/sec

V_o = Initial velocity = 0

W_{CAMI} = Measured weight of CAMI dummy

W_{walker} = Weight of the walker

$W_{drop\ weight}$ = Drop weight = 8 lb

μ_k = Dynamic coefficient of friction = 0.05

N_{CAMI} = Normal force (for CAMI dummy scenario) = weight of CAMI dummy and walker

g = acceleration of gravity = 32.2 ft/sec^2

Position the swivel wheels in such a way that the walker moves forward in a straight line parallel to Plane A.

(ii) [Reserved]

(7) Instead of complying with section 7.6.3.2 of ASTM F 977–07, comply with the following:

(i) 7.6.3.2 Place a CAMI infant dummy Mark II in the walker and position it as shown in Fig. 11 with the torso contacting the front of the occupant seating area and arms placed on the walker tray.

(ii) [Reserved]

(8) Instead of complying with section 7.6.3.3 of ASTM F 977–07, comply with the following:

(i) 7.6.3.3 While holding the walker stationary, attach an 8 lb (3.6 kg) weight to the front of the walker base at Plane A by means of a 7-strand military rope with 550 lb tensile strength (*e.g.,* paracord 550) and a stainless steel ball bearing pulley with an outside diameter of 1.25 in (32mm) and adjust the pulley so that the force is applied horizontally (0 ± 0.5° with respect to the table surface).

(ii) [Reserved]

(9) Instead of complying with section 7.6.3.6 of ASTM F 977–07, comply with the following:

(i) 7.6.3.6 Repeat 7.6.3.1–7.6.3.5 using the CAMI dummy with the weighted vest and with distance d, computed using the following equation:

$$d_{CAMI\ w/vest} - \frac{\left(V_f^2 - V_o^2\right) * \left(W_{CAMI\ w/vest} + W_{walker} + W_{drop\ weight}\right)}{2g\left(W_{drop\ weight} - \mu_k N_{CAMI\ w/vest}\right)}$$

Where

V_f = Maximum velocity of walker at edge of platform = 4 ft/sec

V_o = Initial velocity = 0

$W_{CAMI\ w/vest}$ = Measured weight of CAMI dummy and weighted vest

W_{walker} = Weight of the walker

$W_{drop\ weight}$ = Drop weight = 8 lb

μ_k = Dynamic coefficient of friction = 0.05

$N_{CAMI\ w/vest}$ = Normal force (for CAMI dummy fitted with 11 lb vest scenario) = weight of CAMI dummy + vest weight + walker weight

g = acceleration of gravity = 32.2 ft/sec^2

(ii) [Reserved]

(10) In addition to complying with section 7.6.3.6 of ASTM F 977–07, comply with the following:

(i) 7.6.3.7 Repeat tests in the following sequence: Section 7.6.3.4, section 7.6.3.5, and section 7.6.3.6 two additional times.

(ii) [Reserved]

(11) Instead of complying with 7.6.4.1 of ASTM F 977–07, comply with the following:

(i) 7.6.4.1 Center the walker on the test platform facing sideways so that Plane B is perpendicular to the front edge of the platform and the walker is distance *d* from the center of the most sideward wheel(s) to the edge of the test platform,

$$d_{CAMI} = \frac{\left(V_f^2 - V_o^2\right) * \left(W_{CAMI} + W_{walker} + W_{drop\ weight}\right)}{2g\left(W_{drop\ weight} - \mu_k N_{CAMI}\right)}$$

Where

V_f = Maximum velocity of walker at edge of platform = 2 ft/sec

V_o = Initial velocity = 0

W_{CAMI} = Measured weight of CAMI dummy

W_{walker} = Weight of the walker

$W_{drop\ weight}$ = Drop weight = 8 lb

μ_k = Dynamic coefficient of friction = 0.05

N_{CAMI} = Normal force (for CAMI dummy scenario) = weight of CAMI dummy and walker

g = acceleration of gravity = 32.2 ft/sec^2

Position the swivel wheels in such a way that the walker moves sideward in a straight line parallel to Plane A.

(ii) [Reserved]

(12) Instead of complying with section 7.6.4.3 of ASTM F 977–07, comply with the following:

(i) 7.6.4.3 While holding the walker stationary, attach an 8 lb (3.6 kg) weight to the side of the walker base at Plane B by means of a rope (as specified in 7.6.3.3) and a pulley (as specified in 7.6.3.3) and adjust the pulley so that the force is applied horizontally ($0 \pm 0.5°$ with respect to the table surface).

(ii) [Reserved]

(13) Instead of complying with section 7.6.4.6 of ASTM F 977–07, comply with the following:

(i) 7.6.4.6 Repeat 7.6.4.1 through 7.6.4.5 using the CAMI dummy with the weighted vest (see Fig. 12) and with distance d, computed using the following equation:

$$d_{CAMI\ w/vest} = \frac{\left(V_f^2 - V_o^2\right) * \left(W_{CAMI\ w/vest} + W_{walker} + W_{drop\ weight}\right)}{2g\left(W_{drop\ weight} - \mu_k N_{CAMI\ w/vest}\right)}$$

Where

V_f = Maximum velocity of walker at edge of platform = 2 ft/sec

V_o = Initial velocity = 0

$W_{CAMI\ w/vest}$ = Measured weight of CAMI dummy and weighted vest

W_{walker} = Weight of the walker

$W_{drop\ weight}$ = Drop weight = 8 lb

μ_k = Dynamic coefficient of friction = 0.05

$N_{CAMI\ w/vest}$ = Normal force (for CAMI dummy fitted with 11 lb vest scenario) = weight of CAMI dummy + vest weight + walker weight

g = acceleration of gravity = 32.2 ft/sec$^{2''}$

(ii) [Reserved]

(14) In addition to complying with section 7.6.4.6 of ASTM F 977–07, comply with the following:

(i) 7.6.4.7 Repeat tests in the following sequence: section 7.6.4.4, section 7.6.4.5, and section 7.6.4.6 two additional times.

(ii) [Reserved]

(15) Instead of complying with Figure 10, use the following:

BILLING CODE 6355–01–P

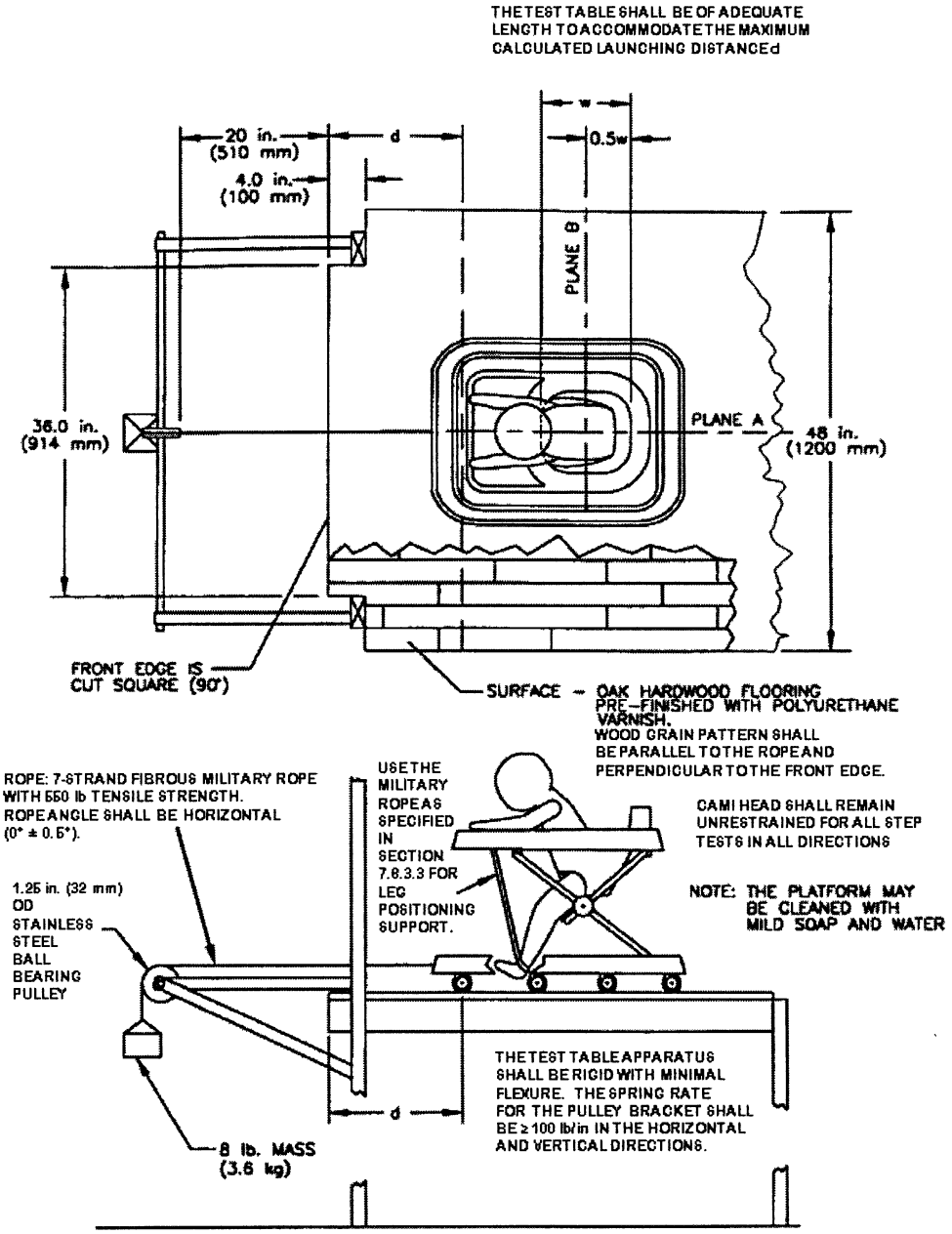

Figure 10 Test Platform Specifications

BILLING CODE 6355–01–C

(16) Instead of complying with section 7.6.5.1 of ASTM F 977–07, comply with the following:

(i) 7.6.5.1 Center the walker on the test platform facing rearward so that Plane A is perpendicular to the front edge of the platform and the walker is distance *d* from the center of the most rearward wheel(s) to the edge of the test platform,

$$d_{CAMI} = \frac{\left(V_f^2 - V_o^2\right) * \left(W_{CAMI} + W_{walker} + W_{drop\ weight}\right)}{2g\left(W_{drop\ weight} - \mu_k N_{CAMI}\right)}$$

Where

V_f = Maximum velocity of walker at edge of platform = 4 ft/sec

V_o = Initial velocity = 0

W_{CAMI} = Measured weight of CAMI dummy

W_{walker} = Weight of the walker

$W_{drop\ weight}$ = Drop weight = 8 lb

μ_k = Dynamic coefficient of friction = 0.05

N_{CAMI} = Normal force (for CAMI dummy scenario) = weight of CAMI dummy and walker

g = acceleration of gravity = 32.2 ft/sec^2

Position the swivel wheels in such a way that the walker moves rearward in a straight line parallel to Plane A. If the walker has an open back design, attach the 1 in aluminum angle used in 7.3.4 to span the back frame.

(ii) [Reserved]

(17) Instead of complying with section 7.6.5.3 of ASTM F 977–07, comply with the following:

(i) 7.6.5.3 While holding the walker stationary, attach an 8 lb (3.6 kg) weight to the rear of the walker base at Plane A by means of a rope (as specified in 7.6.3.3) and a pulley (as specified in 7.6.3.3) and adjust the pulley so that the force is applied horizontally (0 ± 0.5° with respect to the table surface).

(ii) [Reserved]

(18) Instead of complying with section 7.6.5.5 of ASTM F 977–07, comply with the following:

(i) 7.6.5.5 Repeat 7.6.5.1 through 7.6.5.4 using the CAMI dummy with the weighted vest (see Fig. 12) and with distance d, computed using the following equation:

$$d_{CAMI\ w/vest} = \frac{\left(V_f^2 - V_o^2\right) * \left(W_{CAMI\ w/vest} + W_{walker} + W_{drop\ weight}\right)}{2g\left(W_{drop\ weight} - \mu_k N_{CAMI\ w/vest}\right)}$$

Where

V_f = Maximum velocity of walker at edge of platform = 4 ft/sec

V_o = Initial velocity = 0

$W_{CAMI\ w/vest}$ = Measured weight of CAMI dummy and weighted vest

W_{walker} = Weight of the walker

$W_{drop\ weight}$ = Drop weight = 8 lb

μ_k = Dynamic coefficient of friction = 0.05

$N_{CAMI\ w/vest}$ = Normal force (for CAMI dummy fitted with weighted vest scenario) = Measured weight of CAMI dummy + measured weight of vest + walker weight

g = acceleration of gravity = 32.2 ft/sec^2″

(19) In addition to complying with section 7.6.5.5 of ASTM F 977–07, comply with the following:

(i) 7.6.5.6 Repeat tests in the following sequence: section 7.6.5.3, and section 7.6.5.5 two additional times.

(ii) [Reserved]

(20) In addition to complying with section 7.6 of ASTM F 977–07, comply with the following:

(i) 7.7 *Parking Device Test* (see 6.4):

(A) 7.7.1 Perform the parking device test using a Test Mass that is A rigid cylinder 6.30 in ± 0.04 in (160mm ± 1 mm) in diameter, 11.02 in ± 0.04 in (280 mm ± 1 mm) in height with a mass of 16.9 lb (7.65 kg), with its center of gravity in the center of the cylinder.

(B) 7.7.2 Adjust the walker seat to the highest position (if applicable). Place the Test Mass vertically in the walker seat. Set any manual speed control to the fastest position (if applicable). Establish a vertical plane A that passes through the center of the seating area and is parallel to the direction the child faces. Establish a vertical plane B that is perpendicular to plane A and passes through the center of the seating area.

(C) 7.7.3 Perform the parking device test in the forward, sideward, and rearward directions.

(D) 7.7.4 *Forward facing test of parking devices.*

(E) 7.7.4.1 Position the walker including the Test Mass facing forward so that plane A is perpendicular to the front edge of the platform (see fig. 10) and passes through the center of the pulley. Engage all parking devices in accordance with the manufacturer's instructions.

(F) 7.7.4.2 Within one minute of placing the walker with the Test Mass on the platform, attach an 8 lb weight gradually within 5 seconds to the walker frame base at plane A by means of a rope and a pulley per the test apparatus specifications in the step test procedure, adjusted so that the force is applied horizontally (rope angle shall be 0 ± 0.5°). Remove the 8 lb weight after 1 minute. Measure the displacement.

(G) 7.7.5 *Sideward facing test of parking devices.*

(H) 7.7.5.1 Position the walker including the Test Mass facing sideward so that plane B is perpendicular to the front edge of the platform and passes through the center of the pulley. Engage all parking devices in accordance with the manufacturer's instructions.

(I) 7.7.5.2 Within one minute of placing the walker with the Test Mass on the platform, attach an 8 lb weight gradually within 5 seconds to the walker frame base at plane B by means of a rope and a pulley per the test apparatus specifications in the step test procedure, adjusted so that the force is applied horizontally (rope angle shall be 0 ± 0.5°). Remove the 8 lb weight after 1 minute. Measure the displacement.

(J) 7.7.5.3 If the walker is equipped with fixed direction rear wheels and the walker is displaced in a curved path, establish the location of the rope attachment as the reference point and measure the linear displacement of that reference point after performing the procedure as described in 7.7.5.1 and 7.7.5.2.

(K) 7.7.6 *Rearward facing test of parking devices.*

(L) 7.7.6.1 Position the walker including the Test Mass facing rearward so that plane A is perpendicular to the front edge of the platform and passes through the center of the pulley. Engage all parking devices in accordance with the manufacturers' instructions.

(M) 7.7.6.2 Within one minute of placing the walker with the Test Mass on the platform, attach an 8 lb weight gradually within 5 seconds to the walker frame base at plane A by means of a rope and a pulley per the test apparatus specifications in the step test procedure, adjusted so that the force is applied horizontally (rope angle shall be 0 ± 0.5°). Remove the 8 lb weight after 1 minute. Measure the displacement.

(ii) [Reserved]

(21) In addition to complying with section 8.2.3.2 of ASTM F 977–07, comply with the following:

(i) 8.2.3.3 A warning statement shall address the following:

WARNING: Parking brake use does not totally prevent walker movement. Always keep child in view when in the walker, even when using the parking brakes.

(ii) [Reserved]

(22) Instead of complying with section 8.2.4.2 of ASTM F 977–07, comply with the following:

(i) 8.2.4.2 The stairs warning shall be stated exactly as follows:

⚠ WARNING – STAIR HAZARD
Avoid serious injury or death
Block stairs/steps securely before using walker, even when using parking brake.

(ii) [Reserved]

Dated: June 9, 2010.

Todd Stevenson,

Secretary, U.S. Consumer Product Safety Commission.

[FR Doc. 2010–14323 Filed 6–18–10; 8:45 am]

BILLING CODE 6355–01–P

CONSUMER PRODUCT SAFETY COMMISSION

16 CFR Part 1500

RIN 3041–AC77

Revocation of Regulations Banning Certain Baby-Walkers

AGENCY: Consumer Product Safety Commission.

ACTION: Final rule.

SUMMARY: In this document, the Consumer Product Safety Commission ("CPSC" or "Commission") is revoking its existing regulations pertaining to baby-walkers because those regulations are being replaced by a new and more comprehensive safety standard applicable to baby-walkers. The new standard is being added by the Commission in a separate document published elsewhere in this issue of the **Federal Register**.

DATES: Effective December 21, 2010.

FOR FURTHER INFORMATION CONTACT: Carolyn Manley, Division of Regulatory Enforcement, Office of Compliance, Consumer Product Safety Commission, 4330 East West Highway, Bethesda, MD 20814, 301–504–7607, *cmanley@cpsc.gov.*

SUPPLEMENTARY INFORMATION:

A. Background

1. *The CPSC's regulation for baby-walkers.* CPSC regulations at 16 CFR 1500.18(a)(6) and 1500.86(a)(4) ban any "baby-bouncer," "walker-jumper," "baby-walker," and "any other similar article" that does not meet specified safety criteria. These regulations were issued in 1971 by the Food and Drug Administration ("FDA") under the Federal Hazardous Substances Act ("FHSA"), 15 U.S.C. 1261–1278 (*available at http://www.cpsc.gov/businfo/fhsa.pdf*). 36 FR 21809 (Nov. 16, 1971). On May 14, 1973, the functions under the FHSA were transferred to the then newly-created CPSC.

Specifically, 16 CFR 1500.18(a)(6) bans baby-walkers, baby-bouncers, walker-jumpers and "any other similar article" that is intended to support very young children while "sitting walking, bouncing, jumping, and/or reclining," and which, because of its design, has any exposed parts capable of causing amputation, crushing, lacerations, fractures, hematomas, bruises, or other injuries to fingers, toes, or other parts of the anatomy of young children. The regulation describes the hazardous design features of such articles warranting the ban as including, but not being limited to, one or more of the following:

- Areas about the point on each side of the article where the frame components are joined together to form an X-shape capable of producing a scissoring, shearing, or pinching effect;
- Other areas where two or more parts are joined in such a manner as to permit rotational movement capable of exerting a scissoring, shearing, or pinching effect;
- Exposed coil springs which may expand sufficiently to allow an infant's finger, toe, or other body part to be inserted, in whole or in part, and injured by being caught between the coils of the spring or between the spring and another part of the article;
- Holes in plates or tubes which also provide the possibility of insertion of a finger, toe, or other part of the anatomy that could then be injured by the movement of another part of the article; or
- A design and construction that permits accidental collapse while in use.

Exemptions to the ban are at 16 CFR 1500.86(a)(4). These include any baby-walker (or the other subject products) where:

- The frames are designed and constructed in a manner to prevent injury from any scissoring, shearing, or pinching when the members of the frame or other components rotate about a common axis or fastening point or otherwise move relative to one another; and
- Any coil springs which expand when the article is subjected to a force that will extend the spring to its maximum distance so that a space between successive coils is greater than one-eighth inch (0.125 inch) are covered or otherwise designed to prevent injuries; and
- All holes larger than one-eighth inch (0.125 inch) in diameter, and slots, cracks, or hinged components in any portion of the article through which a child could insert, in whole or in part, a finger, toe, or any other part of the anatomy, are guarded or otherwise designed to prevent injuries; and
- The articles are designed and constructed to prevent accidental collapse while in use; and
- The articles are designed and constructed in a manner that eliminates from any portion of the article the possibility of presenting a mechanical hazard through pinching, bruising, lacerating, crushing, breaking, amputating, or otherwise injuring portions of the human body when in normal use or when subjected to reasonably foreseeable damage or abuse; and
- Any article which is introduced into interstate commerce after the effective date of [the regulation] is labeled:

—With a conspicuous statement of the name and address of the manufacturer, packer, distributor, or seller; and

—With a code mark on the article itself and on the package containing the article or on the shipping container, in addition to the invoice(s) or shipping document(s), which code mark will permit future identification by the manufacturer of any given model (the manufacturer shall change the model number whenever the article undergoes a significant structural or design modification);

and

- The manufacturer or importer of the article shall make, keep, and maintain for 3 years records of sale, distribution, and results of inspections and tests conducted in accordance with this subparagraph and shall make such records available at all reasonable hours upon request by any officer or employee of the Consumer Product Safety Commission and shall permit such officer or employee to inspect and copy such records, to make such stock inventories as such person deems necessary, and to otherwise check the correctness of such records.

The existing regulations do not include any requirements specifically

pertaining to hazards associated with falls down stairs, structural integrity, occupant retention, or loading/stability issues.

As discussed earlier in this part A.1 of this preamble, the regulations at 16 CFR 1500.18(a)(6) and 1500.86(a)(4) apply to any "baby-bouncer," "walker-jumper," "baby-walker," and "any other similar article." The regulations do not define those terms, and when FDA promulgated those regulations in 1971, it expressly rejected comments that sought a description of the regulated articles [Ref. 9]. (Documents supporting statements in this notice are identified by [Ref. #], where # is the number of the reference document as listed below in section G of this notice.)

2. *Recent statutory changes affecting baby-walkers.* The Consumer Product Safety Improvement Act of 2008 ("CPSIA"), Pub. L. No. 110–314, 122 Stat. 3016 (*available at http://www.cpsc.gov/cpsia.pdf*), was enacted on August 14, 2008. Section 104 of the CPSIA directs the Commission to take a number of actions concerning "durable infant or toddler products." Section 104(f) of the CPSIA defines a durable infant or toddler product as a durable product intended for use, or that may be reasonably expected to be used, by children under the age of 5 years. This includes cribs, toddler beds, high chairs, booster chairs, hook-on chairs, bath seats, gates and other enclosures for confining a child, play yards, stationary activity centers, infant carriers, strollers, walkers, swings, bassinets, and cradles. Section 104(b) of the CPSIA provides, in part, that the Commission shall, in consultation with representatives of consumer groups, juvenile product manufacturers, and independent child product engineers and experts, examine and assess the effectiveness of any voluntary consumer product safety standards for durable infant or toddler products. The Commission also is directed to promulgate consumer product safety standards that are substantially the same as such voluntary standards or that are more stringent than such voluntary standards if the Commission determines that more stringent standards would further reduce the risk of injury associated with the products.

Baby-walkers are one of the first two products addressed in these rulemakings. On September 3, 2009, the Commission proposed a safety standard for infant walkers. 74 FR 45704. Elsewhere in this issue of the **Federal Register**, the Commission is issuing a new safety standard for infant walkers, based largely on the provisions of the current ASTM voluntary standard. Given the anticipated new safety standard for infant walkers, the Commission, on September 3, 2009, proposed a rule to revoke 16 CFR 1500.18(a)(6) and 1500.86(a)(4). 74 FR 45714.

3. *The voluntary standard for infant walkers.* The current voluntary standard for Infant Walkers, The *Standard Consumer Safety Specification for Infant Walkers* (ASTM F977–07) [Ref. 1] is published by the American Society for Testing and Materials (now ASTM International, or ASTM). The ASTM voluntary standard defines an infant walker as a mobile unit that enables a child to move on a horizontal surface when propelled by the child sitting or standing within the walker, and that is in the manufacturer's recommended use position. This standard has provisions to address the following:

- Latching or Locking Mechanisms;
- Openings;
- Scissoring, Shearing, and Pinching;
- Exposed Coil Springs;
- Labeling;
- Protective Components;
- Stability;
- Structural Integrity;
- Occupant Retention; and
- Prevention of Falls Down Step(s).

ASTM F977–07 contains provisions pertaining to scissoring, shearing, pinching, and accidental collapse that are stricter, or more conservative, than the existing CPSC regulation. With regard to exposed coil springs and openings, the ASTM voluntary standard differs somewhat from the existing CPSC regulation.

The specifications in ASTM F977–07 for coil springs and openings (holes) are similar in concept to those in the mandatory regulation, but are less restrictive as to allowable dimensions. For instance, the voluntary standard prohibits any hole or slot between 0.210″ and 0.375″ in size that extends entirely through a wall section of any rigid material less than 0.375″ thick. The existing regulation bans any baby-walker that contains a hole larger than 0.125″ in diameter, and it does not contain a depth requirement.

The rationale for the ASTM standard was based on anthropometric data developed for the CPSC by the University of Michigan in 1975. (Snyder, R. G., Spencer, M. L., Owings, C. L. & Schneider, L. W. (1975), *Physical Characteristics of Children As Related to Death and Injury for Consumer Product Design and Use, Prepared for the Consumer Product Safety Commission (UM–HSRI–BI–75–5 Final Report Contract FDA–72–70 May 1975),* Highway Safety Research Institute, The University of Michigan, May 31, 1975.) This data set sampled body measurements of children from 2 weeks to 13 years of age. The measurements relevant here are the little finger diameter and middle finger diameter. The intent of the ASTM standard is to prevent entrapments by making openings either too small for the smallest user to penetrate with their smallest finger or larger than the largest user's biggest finger (thereby allowing the finger to be withdrawn without entrapment). The existing CPSC regulations were never revised or updated to take this data into consideration. Thus, the requirements in the CPSC regulations are outdated in this respect. However, the CPSC regulations also provide that hazards presented by holes and by maximum coil spring spacing are acceptable if they are "otherwise designed to prevent injuries." This allows baby-walkers that comply with the ASTM voluntary standard to also comply with the CPSC requirements.

B. Required Accredited Third Party Testing and Certification of Baby-Walkers

Section 14(a)(2) of the Consumer Product Safety Act ("CPSA"), 15 U.S.C. 2063(a)(2) (*available at http://www.cpsc.gov/cpsia.pdf*), as amended by section 102 of the CPSIA, requires manufacturers and private labelers of children's products (such as baby-walkers) that are subject to a children's product safety rule to submit sufficient samples of the children's product, or samples that are identical in all material respects to the product, to a CPSC-recognized accredited third party conformity assessment body (*i.e.,* testing laboratory) to be tested for compliance with any applicable children's product safety rule. (The term "children's product safety rule" is defined at 15 U.S.C. 2063(f)(1). *See* also 15 U.S.C. 2052(a)(5), 2052(a)(6).) For the purposes of the CPSA, the term "manufacturer" includes an importer. 15 U.S.C. 2052(a)(11).

The Commission has issued regulations at 16 CFR 1110 concerning the content of certificates of compliance and limiting the parties who must issue such certificates to the United States importer and, in the case of domestically produced products, the United States manufacturer. Based on such testing, the manufacturer and private labeler must issue a certificate stating that such children's product complies with the children's product safety rule based on the assessment of a third party conformity assessment body accredited to conduct such tests.

Unless stayed by the Commission, these requirements apply to any such children's product that is manufactured more than 90 days after the Commission has established and published a notice of the requirements for accreditation of third party conformity assessment bodies to assess conformity with any children's product safety rule to which such children's product is subject. Section 14(a)(3) of the CPSA, 15 U.S.C. 2063(a)(3). However, if the Commission determines that an insufficient number of third party conformity assessment bodies have been accredited to permit certification for a children's product safety rule, the Commission may extend the deadline for certification to such rule by not more than 60 days. Section 14(a)(3)(F) of the CPSA, 15 U.S.C. 2063(a)(3)(F).

Section 14(a)(3) of the CPSA also provides a schedule for the dates by which the Commission must publish the notices of the requirements for accreditation of third party conformity assessment bodies for various children's products. For "baby bouncers, walkers, and jumpers," the statute specified that the Commission publish a notice of the requirements for accreditation of third party conformity assessment bodies "to assess conformity with parts 1500.18(a)(6) and 1500.86(a)" and that such publication occur not later than 210 days after the date of enactment of the CPSIA, or March 12, 2009. The Commission did not issue that notice of requirements because the proposed rule to revoke 16 CFR 1500.18(a)(6) and 1500.86(a)(4) made it unproductive to issue a notice of requirements that referenced those regulations. As noted above, elsewhere in this issue of the **Federal Register** the Commission is issuing a final safety standard for infant walkers, 16 CFR part 1216, effective December 21, 2010. Also, the Commission is issuing a notice of requirements for testing infant walkers for certification to the new safety standard for infant walkers. On a schedule to be determined, the Commission also will issue a notice of requirements applicable to the current requirements for baby-bouncers, walker-jumpers, and similar products.

C. Issues Presented in the Proposal and CPSC's Responses

In the preamble to the proposed rule (74 FR at 45718), the Commission noted that there could be some question about whether there are products that fall within 16 CFR 1500.18(a)(6) and 1500.86(a)(4), but not within any ASTM standard. A possible example of this might be jumpers that affix to door frames.

The Commission specifically invited comments on: (1) Whether there are products that are covered by 16 CFR 1500.18(a)(6) and 1500.86(a)(4), but not by any ASTM voluntary standard; (2) whether retention of CPSC's current regulations for those specific products is warranted; and (3) whether there are specific requirements in 16 CFR 1500.18(a)(6) and 1500.86(a), but not in any ASTM standard, that warrant retention.

There were no comments filed in the docket for the proposed revocation of 16 CFR 1500.18(a)(6) and 1500.86(a)(4) (CPSC Docket No. CPSC–2009–0066). However, in the companion proposal to issue a new safety standard for infant walkers based on ASTM F 977–07 (CPSC Docket No. CPSC–2009–0065), one commenter argued that the old regulations should still apply to the products other than infant walkers. Another commenter, although apparently focusing on a potential time gap between revoking the old regulations and issuing the new regulation for infant walkers, stated "we cannot allow for some products to not be covered by the safety standard regulations possibly increasing the number of injured children."

The Commission concludes that it is not in the public interest to revoke the existing requirements of 16 CFR 1500.18(a)(6) and 1500.86(a)(4) as they apply to baby-bouncers, walker-jumpers, and any other similar article except baby-walkers. Having these requirements will make it easier to obtain a recall or other corrective actions if products that present a hazard due to a failure to meet some existing requirement. Any negative effect of having particular dimensions specified in these regulations that are based on outdated anthropometric data is neutralized by the provision in the regulations that allows products that are "otherwise designed to prevent injuries." The Commission would consider an effective requirement based on current anthropometric data to be designed to prevent injuries. Accordingly, only the requirements in 16 CFR 1500.18(a)(6) and 1500.86(a) that apply to baby-walkers are being revoked.

D. Paperwork Reduction Act

This rule does not impose any information collection requirements. Accordingly, this rule is not subject to the Paperwork Reduction Act, 44 U.S.C. 3501–3520.

E. Environmental Considerations

This rule falls within the scope of the Commission's environmental review regulation at 16 CFR 1021.5(c)(1), which provides a categorical exclusion from any requirement for the agency to prepare an environmental assessment or environmental impact statement for rules that revoke product safety standards. Accordingly, neither an environmental assessment nor an environmental impact statement is required.

F. Effective Date

The preamble to the proposed rule specified that the revocation of the existing regulations would be effective upon the date of termination of the stay of testing and certification requirements originally announced in the **Federal Register** of February 9, 2009 (74 FR 6396), or upon the effective date of the new mandatory standard, whichever occurs first (see 74 FR at 45718). The reason that the proposed revocation could become effective upon the termination of the stay of testing and certification, even though the new mandatory standard was not yet issued, was to prevent firms from having to test and certify infant walkers to a standard that would shortly be replaced by a newer, more comprehensive one.

After the proposal was published in the **Federal Register**, the Commission extended the stay for many children's products, including baby-walkers, baby-bouncers, walker-jumpers, and similar products, to 90 days after the Commission issues a notice of requirements for the applicable regulatory requirement [Ref. 12]. Because the Commission will not be issuing a notice of requirements for testing and certifying baby-walkers to the standards in 16 CFR 1500.18(a)(6) and 1500.86(a)(4), no testing or certification to those standards will be required. Accordingly, the revocation of the provisions of those standards applicable to baby-walkers can become effective on the effective date of the new mandatory standard for infant walkers without requiring any testing under the old standard. Testing and certification to the requirements of 16 CFR 1500.18(a)(6) and 1500.86(a)(4) as they apply to the products other than baby walkers will be required 90 days after the Commission publishes a notice of requirements for those products at some future date.

G. References

1. ASTM voluntary standard F 977–07, *Standard Consumer Safety Specification for Infant Walkers.*

2. Memorandum from P. Edwards, Project Manager, to the Commission, "Notice of Proposed Rulemaking—Recommending the Revocation of CPSC

Regulation for Baby Bouncers, Walker-Jumpers, and Baby-Walkers, 16 CFR § 1500.18(a)(6) and § 1500.86(a)(4)," dated August 14, 2009.

3. Snyder, R.G., Spencer, M.L., Owings, C.L. & Schneider, L.W. (1975), *Physical Characteristics of Children As Related to Death and Injury for Consumer Product Design and Use, Prepared for the Consumer Product Safety Commission* (*UM–HSRI–BI–75–5 Final Report Contract FDA–72–70 May 1975),* Highway Safety Research Institute, The University of Michigan, May 31, 1975.

4. ASTM voluntary standard F 2012, *Standard Consumer Safety Performance Specifications for Stationary Activity Centers.*

5. ASTM voluntary standard F 2167, *Standard Consumer Safety Specification for Infant Bouncer Seats.*

6. CPSC staff memorandum to Jacqueline Elder, Assistant Executive Director, Office of Hazard Identification and Reduction, from Patricia Hackett, Division of Mechanical Engineering, "Regulatory Review of CPSC Regulation for Baby Bouncers, Walker-Jumpers, and Baby-Walkers, 16 CFR §§ 1500.18(a)(6) and 1500.86(a)(4)," dated April 24, 2007.

7. CPSC staff memorandum from Mark E. Kumagai, Director, Division of Mechanical Engineering, Directorate for Engineering Sciences, "Staff Draft Proposed Final Rule—Revocation of CPSC Regulation for Baby-Walkers, 16 CFR 1500.18(a)(6) and 1500.86(a)(4)," May 5, 2010.

8. 36 FR 7255–56 (April 16, 1971).

9. 36 FR 21809–10 (Nov. 16, 1971).

10. 73 FR 68328 (Nov. 18, 2008).

11. 74 FR 6396 (Feb. 9, 2009).

12. 74 FR 68588 (Dec. 28, 2009).

List of Subjects in 16 CFR Part 1500

Baby walkers, Consumer protection, Hazardous substances, Imports, Infants and children, Labeling, Law enforcement, Toys.

■ For the reasons stated in the preamble, the Consumer Product Safety Commission amends 16 CFR part 1500 as follows:

PART 1500—HAZARDOUS SUBSTANCES AND ARTICLES; ADMINISTRATION AND ENFORCEMENT REGULATIONS

■ 1. The authority citation for 16 CFR part 1500 continues to read as follows:

Authority: 15 U.S.C. 1261–1278.

■ 2. Amend § 1500.18(a)(6) introductory text by revising the first sentence to read as follows:

§ 1500.18 Banned toys and other banned articles intended for use by children.

(a) * * *

(6) Any article known as a "baby-bouncer" or "walker-jumper" and any other similar article (referred to in this paragraph as "article(s)"), except an infant walker subject to part 1216, which is intended to support very young children while sitting, bouncing, jumping, and/or reclining, and which because of its design has any exposed parts capable of causing amputation, crushing, lacerations, fractures, hematomas, bruises, or other injuries to fingers, toes, or other parts of the anatomy of young children.

■ 3. Amend § 1500.86 by revising paragraph (a)(4) introductory text to read as follows:

§ 1500.86 Exemptions from classification as a banned toy or other banned article for use by children.

(a) * * *

(4) Any article known as a "baby-bouncer" or "walker-jumper" and any other similar article (referred to in this paragraph as "article(s)"), except an infant walker subject to part 1216 of this chapter, described in § 1500.18(a)(6) provided:

* * * * *

Dated: June 9, 2010.

Todd Stevenson,

Secretary, U.S. Consumer Product Safety Commission.

[FR Doc. 2010–14326 Filed 6–18–10; 8:45 am]

BILLING CODE 6355–01–P

CONSUMER PRODUCT SAFETY COMMISSION

[CPSC Docket No. CPSC–2009–0066]

16 CFR Part 1216

Third Party Testing for Certain Children's Products; Infant Walkers: Requirements for Accreditation of Third Party Conformity Assessment Bodies

AGENCY: Consumer Product Safety Commission.

ACTION: Notice of requirements.

SUMMARY: The Consumer Product Safety Commission (CPSC or Commission) is issuing a notice of requirements that provides the criteria and process for Commission acceptance of accreditation of third party conformity assessment bodies for testing pursuant to specific CPSC regulations relating to infant walkers. The Commission is issuing this notice of requirements pursuant to section 14(a)(3)(B)(vi) of the Consumer Product Safety Act (CPSA) (15 U.S.C. 2063(a)(3)(B)(vi)).

DATES: *Effective Date:* The requirements for accreditation of third party conformity assessment bodies to assess conformity with 16 CFR part 1216 are effective upon publication of this notice in the **Federal Register**.

Comments in response to this notice of requirements should be submitted by July 21, 2010. Comments on this notice should be captioned "Third Party Testing for Certain Children's Products; Infant Walkers: Requirements for Accreditation of Third Party Conformity Assessment Bodies."

ADDRESSES: You may submit comments, identified by Docket No. CPSC–2009–0066, by any of the following methods:

Electronic Submissions: Submit electronic comments in the following way:

Federal eRulemaking Portal: http://www.regulations.gov. Follow the instructions for submitting comments. To ensure timely processing of comments, the Commission is no longer accepting comments submitted by electronic mail (e-mail) except through *http://www.regulations.gov.*

Written Submissions: Submit written submissions in the following ways:

Mail/Hand delivery/Courier (for paper, disk, or CD–ROM submissions) preferably in five copies, to: Office of the Secretary, Consumer Product Safety Commission, Room 820, 4330 East West Highway, Bethesda, MD 20814; telephone (301) 504–7923.

Instructions: All submissions received must include the agency name and docket number for this notice. All comments received may be posted without change to *http://www.regulations.gov,* including any personal information provided. Do not submit confidential business information, trade secret information, or other sensitive or protected information (such as a Social Security Number) electronically; if furnished at all, such information should be submitted in writing.

Docket: For access to the docket to read background documents or comments received, go to *http://www.regulations.gov.*

FOR FURTHER INFORMATION CONTACT: Robert "Jay" Howell, Assistant Executive Director for Hazard Identification and Reduction, U.S. Consumer Product Safety Commission, 4330 East West Highway, Bethesda, Maryland 20814; e-mail *rhowell@cpsc.gov.*

SUPPLEMENTARY INFORMATION:

I. Introduction

Section 14(a)(3)(B)(vi) of the CPSA, as added by section 102(a)(2) of the Consumer Product Safety Improvement Act of 2008 (CPSIA), Public Law 110–314, directs the CPSC to publish a notice of requirements for accreditation of third party conformity assessment bodies to assess children's products for conformity with "other children's product safety rules." Section 14(f)(1) of the CPSA defines "children's product safety rule" as "a consumer product safety rule under [the CPSA] or similar rule, regulation, standard, or ban under any other Act enforced by the Commission, including a rule declaring a consumer product to be a banned hazardous product or substance." Under section 14(a)(2) of the CPSA, as added by section 102(a)(2) of the CPSIA, every manufacturer (and the private labeler, if applicable) of a children's product subject to a children's product safety rule must have such product tested by a third party conformity assessment body accredited to do so, and must issue a certificate of compliance with the applicable regulations based on that testing. Section 14(a)(2) of the CPSA also requires that certification be based on testing of sufficient samples of the product, or samples that are identical in all material respects to the product. The Commission also emphasizes that, irrespective of certification, the product in question must comply with applicable CPSC requirements (*see, e.g.,* section 14(h) of the CPSA, as added by section 102(b) of the CPSIA).

This notice provides the criteria and process for Commission acceptance of accreditation of third party conformity assessment bodies for testing pursuant to the safety standard for infant walkers which appears elsewhere in this issue of the **Federal Register**. The standard for infant walkers will be codified at 16 CFR part 1216. The standard contains the testing methods that conformity assessment bodies will use to assess infant walkers. The Commission is recognizing limited circumstances in which it will accept certifications based on product testing conducted before the infant walkers standard becomes effective in six months. The details regarding those limited circumstances can be found in part IV of this document below.

Although section 14(a)(3)(B)(vi) of the CPSA directs the CPSC to publish a notice of requirements for accreditation of third party conformity assessment bodies to assess conformity with "all other children's product safety rules," this notice of requirements is limited to the standard identified immediately above.

The CPSC also recognizes that section 14(a)(3)(B)(vi) of the CPSA is captioned as "All Other Children's Product Safety Rules," but the body of the statutory requirement refers only to "other children's product safety rules." Nevertheless, section 14(a)(3)(B)(vi) of the CPSA could be construed as requiring a notice of requirements for "all" other children's product safety rules, rather than a notice of requirements for "some" or "certain" children's product safety rules. However, whether a particular rule represents a "children's product safety rule" may be subject to interpretation, and the Commission staff is continuing to evaluate which rules, regulations, standards, or bans are "children's product safety rules." The CPSC intends to issue additional notices of requirements for other rules which the Commission determines to be "children's product safety rules."

This notice of requirements applies to all third party conformity assessment bodies as described in section 14(f)(2) of the CPSA. Generally speaking, such third party conformity assessment bodies are: (1) Third party conformity assessment bodies that are not owned, managed, or controlled by a manufacturer or private labeler of a children's product to be tested by the third party conformity assessment body for certification purposes; (2) "firewalled" conformity assessment bodies (those that are owned, managed, or controlled by a manufacturer or private labeler of a children's product to be tested by the third party conformity assessment body for certification purposes and that seek accreditation under the additional statutory criteria for "firewalled" conformity assessment bodies); and (3) third party conformity assessment bodies owned or controlled, in whole or in part, by a government.

The Commission requires baseline accreditation of each category of third party conformity assessment body to the International Organization for Standardization (ISO)/International Electrotechnical Commission (IEC) Standard 17025:2005, "General Requirements for the Competence of Testing and Calibration Laboratories." The accreditation must be by an accreditation body that is a signatory to the International Laboratory Accreditation Cooperation-Mutual Recognition Arrangement (ILAC–MRA), and the scope of the accreditation must include testing for any of the test methods identified earlier in part I of this document for which the third party conformity assessment body seeks to be accredited.

(A description of the history and content of the ILAC–MRA approach and of the requirements of the ISO/IEC 17025:2005 laboratory accreditation standard is provided in the CPSC staff briefing memorandum "Third Party Conformity Assessment Body Accreditation Requirements for Testing Compliance with 16 CFR part 1501 (Small Parts Regulations)," dated November 2008 and available on the CPSC's Web site at *http://www.cpsc.gov/library/foia/foia09/brief/smallparts.pdf.*)

The Commission has established an electronic accreditation registration and listing system that can be accessed via its Web site at *http://www.cpsc.gov/about/cpsia/labaccred.html.*

The Commission stayed the enforcement of certain provisions of section 14(a) of the CPSA in a notice published in the **Federal Register** on February 9, 2009 (74 FR 6396); the stay applied to testing and certification of various products, including infant walkers. On December 28, 2009, the Commission published a notice in the **Federal Register** (74 FR 68588) revising the terms of the stay. One section of the December 28, 2009, notice addressed "Consumer Products or Children's Products Where the Commission Is Continuing the Stay of Enforcement Until Further Notice," due to factors such as pending rulemaking proceedings affecting the product or the absence of a notice of requirements. The infant walkers testing and certification requirements were included in that section of the December 28, 2009, notice. As the factors preventing the stay from being lifted in the December 28, 2009, notice with regard to testing and certifications of infant walkers were the absence of approved standards and a notice of requirements, publication of this notice, along with the final rule on Safety Standard for Infant Walkers which appears elsewhere in this issue of the **Federal Register**, have the effect of lifting the stay with regard to these CPSC regulations for infant walkers.

This notice of requirements is effective on June 21, 2010. The final rule announcing the Safety Standard for Infant Walkers is effective December 21, 2010. The effect of these twin publications is that each manufacturer (including the importer) or private labeler of a product subject to 16 CFR part 1216 must have any such product manufactured on or after December 21, 2010 tested by a third party conformity assessment body accredited to do so and must issue a certificate of compliance

with 16 CFR part 1216 based on that testing.

This notice of requirements is exempt from the notice and comment rulemaking requirements of the Administrative Procedure Act, 5 U.S.C. 553 (*see* section 14(a)(3)(G) of the CPSA, as added by section 102(a)(2) of the CPSIA (15 U.S.C. 2063(a)(3)(G))).

II. Accreditation Requirements

A. Baseline Third Party Conformity Assessment Body Accreditation Requirements

For a third party conformity assessment body to be accredited to test children's products for conformity with the test methods identified earlier in part I of this document, it must be accredited by an ILAC–MRA signatory accrediting body, and the accreditation must be registered with, and accepted by, the Commission. A listing of ILAC–MRA signatory accrediting bodies is available on the Internet at *http://ilac.org/membersbycategory.html.* The accreditation must be to ISO Standard ISO/IEC 17025:2005, "General Requirements for the Competence of Testing and Calibration Laboratories," and the scope of the accreditation must expressly include testing to the test method for infant walkers included in 16 CFR part 1216, *Safety Standard for Infant Walkers.* A true copy, in English, of the accreditation and scope documents demonstrating compliance with these requirements must be registered with the Commission electronically. The additional requirements for accreditation of firewalled and governmental conformity assessment bodies are described in parts II.B and II.C of this document below.

The Commission will maintain on its Web site an up-to-date listing of third party conformity assessment bodies whose accreditations it has accepted and the scope of each accreditation. Once the Commission adds a third party conformity assessment body to that list, the third party conformity assessment body may commence testing of infant walkers to support certification by the manufacturer or private labeler of compliance with the test methods identified earlier in part I of this document.

B. Additional Accreditation Requirements for Firewalled Conformity Assessment Bodies

In addition to the baseline accreditation requirements in part II.A of this document above, firewalled conformity assessment bodies seeking accredited status must submit to the Commission copies, in English, of their training documents showing how employees are trained to notify the Commission immediately and confidentially of any attempt by the manufacturer, private labeler, or other interested party to hide or exert undue influence over the third party conformity assessment body's test results. This additional requirement applies to any third party conformity assessment body in which a manufacturer or private labeler of a children's product to be tested by the third party conformity assessment body owns an interest of ten percent or more. While the Commission is not addressing common parentage of a third party conformity assessment body and a children's product manufacturer at this time, it will be vigilant to see if this issue needs to be addressed in the future.

As required by section 14(f)(2)(D) of the CPSA, the Commission must formally accept, by order, the accreditation application of a third party conformity assessment body before the third party conformity assessment body can become an accredited firewalled conformity assessment body.

C. Additional Accreditation Requirements for Governmental Conformity Assessment Bodies

In addition to the baseline accreditation requirements of part II.A of this document above, the CPSIA permits accreditation of a third party conformity assessment body owned or controlled, in whole or in part, by a government if:

- To the extent practicable, manufacturers or private labelers located in any nation are permitted to choose conformity assessment bodies that are not owned or controlled by the government of that nation;
- The third party conformity assessment body's testing results are not subject to undue influence by any other person, including another governmental entity;
- The third party conformity assessment body is not accorded more favorable treatment than other third party conformity assessment bodies in the same nation who have been accredited;
- The third party conformity assessment body's testing results are accorded no greater weight by other governmental authorities than those of other accredited third party conformity assessment bodies; and
- The third party conformity assessment body does not exercise undue influence over other governmental authorities on matters affecting its operations or on decisions by other governmental authorities controlling distribution of products based on outcomes of the third party conformity assessment body's conformity assessments.

The Commission will accept the accreditation of a governmental third party conformity assessment body if it meets the baseline accreditation requirements of part II.A of this document above and meets the additional conditions stated here. To obtain this assurance, CPSC staff will engage the governmental entities relevant to the accreditation request.

III. How Does a Third Party Conformity Assessment Body Apply for Acceptance of Its Accreditation?

The Commission has established an electronic accreditation acceptance and registration system accessed via the Commission's Internet site at *http://www.cpsc.gov/about/cpsia/labaccred.html.* The applicant provides, in English, basic identifying information concerning its location, the type of accreditation it is seeking, and electronic copies of its ILAC–MRA accreditation certificate and scope statement, and firewalled third party conformity assessment body training document(s), if relevant.

Commission staff will review the submission for accuracy and completeness. In the case of baseline third party conformity assessment bodies and government-owned or government-operated conformity assessment bodies, when that review and any necessary discussions with the applicant are satisfactorily completed, the third party conformity assessment body in question is added to the CPSC's list of accredited third party conformity assessment bodies at *http://www.cpsc.gov/about/cpsia/labaccred.html.* In the case of a firewalled conformity assessment body seeking accredited status, when the staff's review is complete, the staff transmits its recommendation on accreditation to the Commission for consideration. (A third party conformity assessment body that may ultimately seek acceptance as a firewalled third party conformity assessment body also can initially request acceptance as a third party conformity assessment body accredited for testing of children's products other than those of its owners.) If the Commission accepts a staff recommendation to accredit a firewalled conformity assessment body, the firewalled conformity assessment body will then be added to the CPSC's list of accredited third party conformity assessment bodies. In each case, the Commission will notify the third party

conformity assessment body electronically of acceptance of its accreditation. All information to support an accreditation acceptance request must be provided in the English language.

Once the Commission adds a third party conformity assessment body to the list, the third party conformity assessment body may then begin testing of children's products to support certification of compliance with the regulations identified earlier in part I of this document for which it has been accredited.

IV. Acceptance of Children's Product Certifications Based on Third Party Conformity Assessment Body Testing to the New Safety Standard for Infant Walkers Prior to Their Effective Date

Elsewhere in this issue of the **Federal Register**, the Commission is publishing a new safety standard for infant walkers, which will be codified at 16 CFR part 1216. The effect of this notice of requirements and the final rule is that each manufacturer (including the importer) or private labeler of a product subject to 16 CFR part 1216 must have any such product manufactured on or after December 21, 2010 tested by a third party conformity assessment body accredited to do so and must issue a certificate of compliance with 16 CFR part 1216 based on that testing.

To ease the transition to the new standard and avoid a "bottleneck" of products at conformity assessment bodies at or near the effective date of 16 CFR 1216, the Commission will accept certifications based on testing that occurred prior to the effective date of the new standard in certain prescribed circumstances. However, any such testing must comport with all CPSC requirements, including:

- At the time of product testing, the product was tested by a third party conformity assessment body that was ISO/IEC 17025 accredited by an ILAC–MRA member, and had been accepted by the Commission;
- The accreditation scope in effect for the third party conformity assessment body at the time of testing expressly included testing to the test method(s) included in 16 CFR part 1216; and
- The test results show compliance with the test methods in the new regulation (16 CFR part 1216).

Dated: June 9, 2010.

Todd A. Stevenson,

Secretary, Consumer Product Safety Commission.

[FR Doc. 2010–14325 Filed 6–18–10; 8:45 am]

BILLING CODE 6355–01–P

CONSUMER PRODUCT SAFETY COMMISSION

[Docket No. CPSC–2009–0066]

Agency Information Collection Activities; Proposed Collection; Comment Request; Safety Standard for Infant Walkers

AGENCY: Consumer Product Safety Commission.

ACTION: Notice.

SUMMARY: The Consumer Product Safety Commission (CPSC) is announcing an opportunity for public comment on the proposed collection of certain information by the agency. Under the Paperwork Reduction Act of 1995 (the PRA), Federal agencies are required to publish notice in the **Federal Register** concerning each proposed collection of information, and to allow 60 days for public comment in response to the notice. This notice solicits comments on the burden estimates for the marking and instructional literature requirements in the Safety Standard for Infant walkers.

DATES: Submit written or electronic comments on the collection of information by August 20, 2010.

ADDRESSES: You may submit comments, identified by Docket No. CPSC–2009–0066, by any of the following methods:

Electronic Submissions

Submit electronic comments in the following way: Federal eRulemaking Portal: *http://www.regulations.gov*. Follow the instructions for submitting comments.

To ensure timely processing of comments, the Commission is no longer accepting comments submitted by electronic mail (e-mail) except through *http://www.regulations.gov*.

Written Submissions

Submit written submissions in the following way: Mail/Hand delivery/Courier (for paper, disk, or CD–ROM submissions), preferably in five copies, to: Office of the Secretary, Consumer Product Safety Commission, Room 820, 4330 East West Highway, Bethesda, MD 20814; telephone (301) 504–7923.

Instructions: All submissions received must include the agency name and docket number for this notice. All comments received may be posted without change, including any personal identifiers, contact information, or other personal information provided, to *http://www.regulations.gov*. Do not submit confidential business information, trade secret information, or other sensitive or protected information electronically. Such information should be submitted in writing.

Docket: For access to the docket to read background documents or comments received, go to *http://www.regulations.gov*.

FOR FURTHER INFORMATION CONTACT: Patricia Edwards, Project Manager, Directorate for Engineering Sciences, Consumer Product Safety Commission, 4330 East West Highway, Bethesda, MD 20814; telephone (301) 504–7577; *pedwards@cpsc.gov*.

SUPPLEMENTARY INFORMATION: Under the PRA (44 U.S.C. 3501–3520), Federal agencies must obtain approval from the Office of Management and Budget (OMB) for each collection of information they conduct or sponsor. "Collection of information" is defined in 44 U.S.C. 3502(3) and 5 CFR 1320.3(c) and includes agency requests or requirements that members of the public submit reports, keep records, or provide information to a third party. Section 3506(c)(2)(A) of the PRA (44 U.S.C. 3506(c)(2)(A)) requires Federal agencies to provide a 60-day notice in the **Federal Register** concerning each proposed collection of information before submitting the collection to OMB for approval. To comply with this requirement, the CPSC is publishing notice of the proposed collection of information set forth in this document.

With respect to the following collection of information, the CPSC invites comments on these topics: (1) Whether the proposed collection of information is necessary for the proper performance of CPSC's functions, including whether the information will have practical utility; (2) the accuracy of CPSC's estimate of the burden of the proposed collection of information, including the validity of the methodology and assumptions used; (3) ways to enhance the quality, utility, and clarity of the information to be collected; and (4) ways to minimize the burden of the collection of information on respondents, including through the use of automated collection techniques, when appropriate, and other forms of information technology.

Title: Safety Standard for Infant Walkers—16 CFR part 1216.

Description: The rule would require each infant walker to comply with ASTM F 997–07, "Standard Consumer Safety Specification for Infant Walkers." Sections 8 and 9 of ASTM F 997–07 contain requirements for marking and instructional literature.

We estimate the burden of this collection of information as follows:

TABLE 1—ESTIMATED ANNUAL REPORTING BURDEN

16 CFR Section	Number of respondents	Frequency of responses	Total annual responses	Hours per response	Total burden hours
1216.2(a)	3	3	3	0.5	4.5

There are no capital costs or operating and maintenance costs associated with this collection of information.

Our estimates are based on the following:

16 CFR 1215.2(a) would require each infant walker to comply with ASTM F 997–07. Sections 8 and 9 of ASTM F 997–07 contain requirements for marking and instructional literature that are disclosure requirements, thus falling within the definition of "collections of information" at 5 CFR 1320.3(c).

Section 8.6.1 of ASTM F 997–07 requires that the name and "either the place of business (city, state, and mailing address, including zip code) or telephone number, or both" of the manufacturer, distributor, or seller be clearly and legibly marked on "each product and its retail package." Section 8.6.2 of ASTM F 997–07 requires that "a code mark or other means that identifies the date (month and year as a minimum) of manufacture" be clearly and legibly marked on "each product and its retail package." In both cases, the information must be placed on both the product and the retail package.

There are seven known firms supplying walkers to the United States market. Four of the seven firms are known to already produce labels that comply with sections 8.6.1 and 8.6.2 of the standard, so there would be no additional burden on these firms. The remaining three firms are assumed to already use labels on both their products and their packaging, but might need to make some modifications to their existing labels. The estimated time

required to make these modifications is about 30 minutes per model. Each of these firms supplies an average of three models of walkers, therefore, the estimated burden hours associated with labels is 30 minutes x 3 firms x 3 models per firm = 270 minutes or 4.5 hours.

The Commission estimates that hourly compensation for the time required to create and update labels is $27.78 (Bureau of Labor Statistics, September 2009, all workers, goods-producing industries, Sales and office, Table 9). Therefore, the estimated annual cost associated with the Commission recommended labeling requirements is approximately $125.00.

Section 9.1 of ASTM F 997–07 requires instructions to be supplied with the product. Infant walkers are products that generally require some installation and maintenance, and products sold without such information would not be able to successfully compete with products supplying this information. Under OMB's regulations (5 CFR 1320.3(b)(2)), the time, effort, and financial resources necessary to comply with a collection of information that would be incurred by persons in the "normal course of their activities" are excluded from a burden estimate where an agency demonstrates that the disclosure activities needed to comply are "usual and customary." Therefore, because the CPSC is unaware of infant walkers that: (a) Generally require some installation, but (b) lack any instructions to the user about such installation, we tentatively estimate that there are no burden hours associated with the instruction requirement in section 9.1 of ASTM F 997–07 because any burden associated with supplying instructions with an infant walker would be "usual and customary" and not within the definition of "burden" under OMB's regulations.

Based on this analysis, the requirements of the infant walker rule would impose a burden to industry of 4.5 hours at a one-time cost of $125.00.

Dated: June 9, 2010.

Todd Stevenson,

Secretary, Consumer Product Safety Commission.

[FR Doc. 2010–14466 Filed 6–18–10; 8:45 am]

BILLING CODE 6355–01–P

Reader Aids

Federal Register

Vol. 75, No. 118

Monday, June 21, 2010

CUSTOMER SERVICE AND INFORMATION

Federal Register/Code of Federal Regulations	
General Information, indexes and other finding aids	**202–741–6000**
Laws	**741–6000**
Presidential Documents	
Executive orders and proclamations	**741–6000**
The United States Government Manual	**741–6000**
Other Services	
Electronic and on-line services (voice)	**741–6020**
Privacy Act Compilation	**741–6064**
Public Laws Update Service (numbers, dates, etc.)	**741–6043**
TTY for the deaf-and-hard-of-hearing	**741–6086**

ELECTRONIC RESEARCH

World Wide Web

Full text of the daily Federal Register, CFR and other publications is located at: **http://www.gpoaccess.gov/nara/index.html**

Federal Register information and research tools, including Public Inspection List, indexes, and links to GPO Access are located at: **http://www.archives.gov/federal__register**

E-mail

FEDREGTOC-L (Federal Register Table of Contents LISTSERV) is an open e-mail service that provides subscribers with a digital form of the Federal Register Table of Contents. The digital form of the Federal Register Table of Contents includes HTML and PDF links to the full text of each document.

To join or leave, go to **http://listserv.access.gpo.gov** and select *Online mailing list archives, FEDREGTOC-L, Join or leave the list (or change settings);* then follow the instructions.

PENS (Public Law Electronic Notification Service) is an e-mail service that notifies subscribers of recently enacted laws.

To subscribe, go to **http://listserv.gsa.gov/archives/publaws-l.html** and select *Join or leave the list (or change settings);* then follow the instructions.

FEDREGTOC-L and **PENS** are mailing lists only. We cannot respond to specific inquiries.

Reference questions. Send questions and comments about the Federal Register system to: **fedreg.info@nara.gov**

The Federal Register staff cannot interpret specific documents or regulations.

Reminders. Effective January 1, 2009, the Reminders, including Rules Going Into Effect and Comments Due Next Week, no longer appear in the Reader Aids section of the Federal Register. This information can be found online at **http://www.regulations.gov.**

CFR Checklist. Effective January 1, 2009, the CFR Checklist no longer appears in the Federal Register. This information can be found online at **http://bookstore.gpo.gov/.**

FEDERAL REGISTER PAGES AND DATE, JUNE

30267–30686 1
30687–31272 2
31273–31662 3
31663–32074 4
32075–32244 7
32245–32648 8
32649–32840 9
32841–33158 10
33159–33488 11
33489–33672 14
33673–33982 15
33983–34318 16
34319–34616 17
34617–34922 18
34923–35288 21

CFR PARTS AFFECTED DURING JUNE

At the end of each month, the Office of the Federal Register publishes separately a List of CFR Sections Affected (LSA), which lists parts and sections affected by documents published since the revision date of each title.

1 CFR

Proposed Rules:
9 33734
11 33734
12 33734

2 CFR

2339 31273

3 CFR

Proclamations:
8527 32075
8528 32077
8529 32079
8530 32081
8531 32083
8532 32085
8533 34305
8534 34307
8535 34309
8536 34311

Executive Orders:
13544 33983

Administrative Orders:
Memorandums:
Memorandum of May 21, 2010 32087
Memorandum of June 1, 2010 32245
Memorandum of June 2, 2010 32247
Memorandum of June 10, 2010 33987
Notices:
Notice of June 8, 2010 32841
Notice of June 8, 2010 32843
Notice of June 14, 2010 34317
Notice of June 17, 2010 34921
Presidential Determinations:
No. 2010-09 of June 2, 2010 33489
No. 2010-10 of June 8, 2010 34617

5 CFR

531 34923
630 33491
875 30267

Proposed Rules:
1600 34388
1604 34654
1651 34654

7 CFR

28 34319
271 33422
273 33422
275 33422
277 33422
301 .....34320, 34322
305 34322
755 34336
916 31275
917 31275
923 31663
925 34343
930 33673
944 34343
956 34345
1218 31279
1470 .....31610, 34924
3430 33497
4280 33501

Proposed Rules:
46 32306
319 .....30303, 32310
930 .....31719, 33673
984 34950
1000 33534
1215 31730
1755 32313

8 CFR

Proposed Rules:
103 33446
204 33446
244 33446
274A 33446

10 CFR

72 33678
170 34220
171 34220
440 32089

Proposed Rules:
30 33902
32 33902
33 33902
34 33902
35 33902
36 33902
37 33902
39 33902
51 33902
71 33902
72 33736
73 33902
430 .....31224, 31323, 34656
433 34657
435 34657

12 CFR

205 .....31665, 33681
230 31673
561 33501
611 30687
613 30687
615 30687
619 30687
620 30687

701 34619
702 34619
704 34619
708a 34619
708b 34619
709 34619
711 34619
712 34619
715 34619
716 34619
717 34619
721 34619
722 34619
741 34619
742 34619
745 34619
747 34619
790 34619
791 34619
792 34619
793 34619
795 34619
Proposed Rules:
1282 32099

14 CFR

39 ....30268, 30270, 30272, 30274, 30277, 30280, 30282, 30284, 30287, 30290, 30292, 30687, 31282, 32090, 32251, 32253, 32255, 32260, 32262, 32263, 32266, 32649, 33159, 33162, 34347, 34349, 34354, 34357, 34924
65 31283
71 ....30295, 30689, 31677, 32268, 32269, 32271, 32272, 32651, 32652, 33164, 33165, 33681, 34624
73 32093
91 30690
97 ....32094, 32096, 32653, 32655
234 34925
406 30690
Proposed Rules:
21 34953
23 33553
39 ....30740, 31324, 31327, 31329, 31330, 31332, 31731, 31734, 32315, 32863, 33738, 34062, 34390, 34657, 34661, 34663, 34953, 34956
65 30742
71 ....30746, 32117, 32119, 32120, 32317, 32865, 33556, 33557, 33559, 33560, 33561, 34391, 34393
234 32318
244 32318
250 32318
253 32318
259 32318
399 32318

15 CFR

734 31678
744 31678
740 31678
748 31678
750 31678
766 ....31678, 33682
774 ....31678, 33989
Proposed Rules:
700 32122
902 32994

16 CFR

320 31682
1215 ....31688, 31691, 33683
1216 ....35266, 35282
1500 35279
1512 34360

17 CFR

240 33100
241 33100
Proposed Rules:
36 33198
37 33198
38 33198
242 32556

18 CFR

375 32657
Proposed Rules:
342 34959

19 CFR

Proposed Rules:
351 ....32341, 34960

20 CFR

404 ....30692, 32845, 33166, 33167
405 33167
408 33167
416 ....32845, 33167
418 33167
439 31273
Proposed Rules:
1001 33203

21 CFR

73 34360
106 32658
107 32658
312 32658
558 34361
803 32658
872 33169
Proposed Rules:
1301 32140
1309 32140

24 CFR

Proposed Rules:
3280 34064
3500 31334

25 CFR

900 31699
1000 31699

26 CFR

1 ....31736, 32659, 33990
40 33683
49 33683
54 34536
301 33992
602 ....33683, 34536
Proposed Rules:
40 33740
49 33740
54 34569

27 CFR

478 31285

28 CFR

542 34625
Proposed Rules:
0 33205
51 33205

29 CFR

1202 32273
1206 32273
1404 30704
2530 32846
2590 34536
2578 34626
4022 33688
4044 33688
Proposed Rules:
1910 32142

30 CFR

Proposed Rules:
Ch. VII 34666
218 32343
938 ....34960, 34962

31 CFR

560 34630
Proposed Rules:
208 34394

32 CFR

320 34634

33 CFR

100 ....30296, 32661, 32852, 33502, 33690, 34634
117 ....30299, 30300, 32663, 32854, 33505
147 32273
165 ....30706, 30708, 32275, 32280, 32664, 32666, 32855, 33170, 33506, 33692, 33694, 33696, 33698, 33701, 33995, 33997, 33999, 34001, 34361, 34362, 34365, 34367, 34369, 34372, 34374, 34376, 34379, 34636, 34639, 34641, 34927, 34929, 34932, 34934, 34936
334 34643
Proposed Rules:
100 32866
117 ....30305, 30747, 30750, 32349, 32351
165 ....30753, 33741

34 CFR

5 33509
361 32857
371 34296
691 32857
Proposed Rules:
Ch. VI 31338
600 34806
602 34806
603 34806
668 34806
682 34806
685 34806
686 34806
690 34806
691 34806

37 CFR

256 32857

38 CFR

17 ....32668, 32670
21 32293
36 33704
39 34004
Proposed Rules:
17 ....30306, 33216

39 CFR

20 34017
111 ....30300, 31288, 31702
Proposed Rules:
111 32143
501 30309
3010 34074

40 CFR

7 31702
51 31514
52 ....30710, 31288, 31290, 31306, 31514, 31709, 31711, 32293, 32673, 32857, 32858, 33172, 33174, 34644, 34939
63 ....31317, 34649
70 31514
71 31514
82 34017
141 32295
156 33705
174 34040
180 ....31713, 33190, 34045
228 33708
260 31716
261 ....31716, 33712
262 31716
263 31716
264 31716
265 31716
266 31716
268 31716
270 31716
300 33724
1065 34653
Proposed Rules:
7 31738
52 ....30310, 31340, 32353, 33220, 33562, 34669, 34670, 34671, 34964
60 ....31938, 32613, 32682
63 ....31896, 32006, 32682, 34673
72 33392
75 33392
86 33950
98 33950
156 33744
228 33747
241 ....31844, 32682
257 35128
261 35128
264 35128
265 35128
268 35128
271 ....34674, 35128
300 ....33747, 34405
302 35128
761 34076
1039 32613
1042 32613
1065 32613
1068 32613

42 CFR

417 32858
422 32858
423 32858
480 32858
Proposed Rules:
412 ....30756, 30918, 34612

413 .....30756, 30918, 34612

44 CFR

64.....32302
67.....34381
Proposed Rules:
67 .....31361, 31368, 32684, 34415

45 CFR

147.....34536
Proposed Rules:
301.....32145
302.....32145
303.....32145
307.....32145

46 CFR

501.....31320
Proposed Rules:
97.....34574, 34682
148.....34574, 34682

47 CFR

27.....33729
36.....30301
73.....34049
76.....34941
Proposed Rules:
2.....33748
15.....33220
54.....32692, 32699
73.....30756, 33227
97.....33748

48 CFR

Ch. I.....34256, 34291
1.....34260
3.....34258
4.....34260, 34271
5.....34271, 34273
6.....34273
8.....34271
10.....34277
12.....34279
13 .....34271, 34273, 34279
14.....34279
15.....34279
16.....34271
19.....34260
22.....34282
24.....34273
25.....34282
30.....34283
31.....34285, 34291
44.....34277
49.....34291
52 .....34258, 34260, 34277, 34279, 34282, 34283, 34286, 34291
53.....34260, 34286
216.....32641
217 .....32638, 32639, 34942
225 .....32637, 32640, 34943
228.....32642
231.....32642
234.....32638
239.....34946
241.....34942
252 .....32642, 33195, 34943
505.....32860
3025.....32676
3052.....32676
Proposed Rules:
202.....33752
203.....33752
212.....33752
242.....33237
252.....32636, 33752
919.....33752
922.....33752
923.....33752
924.....33752
925.....33752
926.....33752
952.....33752
970.....32719
3015.....32723
3016.....32723
3052.....32723

49 CFR

390.....32860
395.....32860
541.....34946
571.....33515
1002.....30711
1011.....30711
1152.....30711
1180.....30711
Proposed Rules:
535.....33565
544.....34966
611.....31321, 33757

50 CFR

223.....30714
600.....30484
635 .....30484, 30730, 30732, 33531, 33731
648.....30739, 34049
660.....33196, 33733
679.....31321, 31717
Proposed Rules:
17 .....30313, 30319, 30338, 30757, 30769, 31387, 32727, 32728, 32869, 34077
20.....32872
80.....32877
223.....30769
224.....30769
600.....33570
660.....32994
665.....34088
697.....34092

LIST OF PUBLIC LAWS

This is a continuing list of public bills from the current session of Congress which have become Federal laws. It may be used in conjunction with "P L U S" (Public Laws Update Service) on 202–741–6043. This list is also available online at *http://www.archives.gov/federal-register/laws.html*.

The text of laws is not published in the **Federal Register** but may be ordered in "slip law" (individual pamphlet) form from the Superintendent of Documents, U.S. Government Printing Office, Washington, DC 20402 (phone, 202–512–1808). The text will also be made available on the Internet from GPO Access at *http://www.gpoaccess.gov/plaws/index.html*. Some laws may not yet be available.

S. 3473/P.L. 111–191
To amend the Oil Pollution Act of 1990 to authorize advances from Oil Spill Liability Trust Fund for the Deepwater Horizon oil spill. (June 15, 2010; 124 Stat. 1278)
Last List June 14, 2010

Public Laws Electronic Notification Service (PENS)

PENS is a free electronic mail notification service of newly enacted public laws. To subscribe, go to *http://listserv.gsa.gov/archives/publaws-l.html*

Note: This service is strictly for E-mail notification of new laws. The text of laws is not available through this service. **PENS** cannot respond to specific inquiries sent to this address.