AUTHENTICATED U.S. GOVERNMENT INFORMATION GPO

Federal Register

6–4–10 Friday
Vol. 75 No. 107 June 4, 2010

Pages 31663–32074

The **FEDERAL REGISTER** (ISSN 0097–6326) is published daily, Monday through Friday, except official holidays, by the Office of the Federal Register, National Archives and Records Administration, Washington, DC 20408, under the Federal Register Act (44 U.S.C. Ch. 15) and the regulations of the Administrative Committee of the Federal Register (1 CFR Ch. I). The Superintendent of Documents, U.S. Government Printing Office, Washington, DC 20402 is the exclusive distributor of the official edition. Periodicals postage is paid at Washington, DC.

The **FEDERAL REGISTER** provides a uniform system for making available to the public regulations and legal notices issued by Federal agencies. These include Presidential proclamations and Executive Orders, Federal agency documents having general applicability and legal effect, documents required to be published by act of Congress, and other Federal agency documents of public interest.

Documents are on file for public inspection in the Office of the Federal Register the day before they are published, unless the issuing agency requests earlier filing. For a list of documents currently on file for public inspection, see *www.federalregister.gov.*

The seal of the National Archives and Records Administration authenticates the Federal Register as the official serial publication established under the Federal Register Act. Under 44 U.S.C. 1507, the contents of the **Federal Register** shall be judicially noticed.

The **Federal Register** is published in paper and on 24x microfiche. It is also available online at no charge as one of the databases on GPO Access, a service of the U.S. Government Printing Office.

The online edition of the **Federal Register**, *www.gpoaccess.gov/nara,* available through GPO Access, is issued under the authority of the Administrative Committee of the Federal Register as the official legal equivalent of the paper and microfiche editions (44 U.S.C. 4101 and 1 CFR 5.10). It is updated by 6 a.m. each day the **Federal Register** is published and includes both text and graphics from Volume 59, Number 1 (January 2, 1994) forward.

For more information about GPO Access, contact the GPO Access User Support Team, call toll free 1-888-293-6498; DC area 202-512-1530; fax at 202-512-1262; or via e-mail at *gpoaccess@gpo.gov.* The Support Team is available between 7:00 a.m. and 9:00 p.m. Eastern Time, Monday–Friday, except official holidays.

The annual subscription price for the **Federal Register** paper edition is $749 plus postage, or $808, plus postage, for a combined **Federal Register, Federal Register** Index and List of CFR Sections Affected (LSA) subscription; the microfiche edition of the **Federal Register** including the **Federal Register** Index and LSA is $165, plus postage. Six month subscriptions are available for one-half the annual rate. The prevailing postal rates will be applied to orders according to the delivery method requested. The price of a single copy of the daily **Federal Register,** including postage, is based on the number of pages: $11 for an issue containing less than 200 pages; $22 for an issue containing 200 to 400 pages; and $33 for an issue containing more than 400 pages. Single issues of the microfiche edition may be purchased for $3 per copy, including postage. Remit check or money order, made payable to the Superintendent of Documents, or charge to your GPO Deposit Account, VISA, MasterCard, American Express, or Discover. Mail to: U.S. Government Printing Office—New Orders, P.O. Box 979050, St. Louis, MO 63197-9000; or call toll free 1-866-512-1800, DC area 202-512-1800; or go to the U.S. Government Online Bookstore site, see *bookstore.gpo.gov.*

There are no restrictions on the republication of material appearing in the **Federal Register.**

How To Cite This Publication: Use the volume number and the page number. Example: 75 FR 12345.

Postmaster: Send address changes to the Superintendent of Documents, Federal Register, U.S. Government Printing Office, Washington, DC 20402, along with the entire mailing label from the last issue received.

SUBSCRIPTIONS AND COPIES

PUBLIC

Subscriptions:

Paper or fiche	**202–512–1800**
Assistance with public subscriptions	**202–512–1806**

General online information **202–512–1530; 1–888–293–6498**

Single copies/back copies:

Paper or fiche	**202–512–1800**
Assistance with public single copies	**1–866–512–1800 (Toll-Free)**

FEDERAL AGENCIES

Subscriptions:

Paper or fiche	**202–741–6005**
Assistance with Federal agency subscriptions	**202–741–6005**

FEDERAL REGISTER WORKSHOP

THE FEDERAL REGISTER: WHAT IT IS AND HOW TO USE IT

FOR: Any person who uses the Federal Register and Code of Federal Regulations.

WHO: Sponsored by the Office of the Federal Register.

WHAT: Free public briefings (approximately 3 hours) to present:

1. The regulatory process, with a focus on the Federal Register system and the public's role in the development of regulations.
2. The relationship between the Federal Register and Code of Federal Regulations.
3. The important elements of typical Federal Register documents.
4. An introduction to the finding aids of the FR/CFR system.

WHY: To provide the public with access to information necessary to research Federal agency regulations which directly affect them. There will be no discussion of specific agency regulations.

WHEN: Tuesday, June 8, 2010 [CANCELLED]
9 a.m.–12:30 p.m.

WHERE: Office of the Federal Register
Conference Room, Suite 700
800 North Capitol Street, NW.
Washington, DC 20002

RESERVATIONS: (202) 741–6008

Printed on recycled paper.

Contents

Federal Register

Vol. 75, No. 107

Friday, June 4, 2010

Agricultural Marketing Service
RULES
Change in the Handling Regulation:
Sweet Cherries Grown in Designated Counties in Washington, 31663–31665
PROPOSED RULES
Popcorn Promotion, Research, and Consumer Information Order; Reapportionment, 31730–31731
Recommended Decision on Proposed Amendment of Marketing Agreement and Order No. 930:
Tart Cherries Grown in States of Michigan, New York, Pennsylvania, Oregon, Utah, Washington, and Wisconsin, 31719–31730

Agriculture Department
See Agricultural Marketing Service
See Animal and Plant Health Inspection Service
See Food Safety and Inspection Service
See Forest Service
See Grain Inspection, Packers and Stockyards Administration

Animal and Plant Health Inspection Service
NOTICES
Agency Information Collection Activities; Proposals, Submissions, and Approvals:
Brucellosis in Sheep, Goats, and Horses; Payment of Indemnity, 31743–31744
Importation of Artificially Dwarfed Plants, 31748–31749
Importation of Horses, Ruminants, Swine, and Dogs; Inspection and Treatment for Screwworm, 31745–31746
Importation of Mangoes from the Philippines, 31746–31747
Interstate Movement of Certain Land Tortoises, 31747–31748
National Veterinary Services Laboratories Request Forms, 31745

Antitrust Division
NOTICES
National Cooperative Research and Production Act of 1993; Notifications:
Diesel After treatment Accelerated Aging Cycles – Heavy-Duty, 31816
INS Global Learning Consortium, Inc., 31816
Pistoia Alliance, Inc., 31815–31816

Army Department
NOTICES
Environmental Impact Statements; Availability, etc.:
Training Land Expansion for Fort Benning, GA, 31770–31771

Blind or Severely Disabled, Committee for Purchase From People Who Are
See Committee for Purchase From People Who Are Blind or Severely Disabled

Centers for Medicare & Medicaid Services
NOTICES
Agency Information Collection Activities; Proposals, Submissions, and Approvals, 31789–31790

Chemical Safety and Hazard Investigation Board
NOTICES
Meetings; Sunshine Act, 31760–31761

Civil Rights Commission
NOTICES
Meetings:
Connecticut Advisory Committee; Agenda, 31761

Commerce Department
See Foreign-Trade Zones Board
See Industry and Security Bureau
See National Oceanic and Atmospheric Administration
See Patent and Trademark Office
NOTICES
Agency Information Collection Activities; Proposals, Submissions, and Approvals, 31761

Committee for Purchase From People Who Are Blind or Severely Disabled
NOTICES
Procurement List; Additions and Deletions, 31768–31770

Comptroller of the Currency
NOTICES
Agency Information Collection Activities; Proposals, Submissions, and Approvals, 31840–31842

Consumer Product Safety Commission
RULES
Requirements for Accreditation of Third Party Conformity:
Third Party Testing for Certain Children's Products; Infant Bath Seats, 31688–31691
Safety Standards:
Infant Bath Seats, 31691–31699
NOTICES
Meetings; Sunshine Act, 31770

Defense Department
See Army Department

Education Department
NOTICES
Applications for New Awards Using Fiscal Year 2009 Funds:
Impact Aid Discretionary Construction Grant Program, 31771–31775

Environmental Protection Agency
RULES
Approval and Promulgation of Air Quality Implementation Plans:
Delaware; Control of Nitrogen Oxide Emissions from Industrial Boilers and Process Heaters at Petroleum Refineries, 31711–31713
Maryland; Reasonable Further Progress Plan, 2002 Base Year Emission Inventory, Contingency Measures, etc., 31709–31711
Hazardous Waste Technical Corrections and Clarifications Rule, 31716–31717
Nondiscrimination on the Basis of Age in Programs or Activities Receiving Federal Assistance from the Environmental Protection Agency, 31702–31709

Tolerance Exemption:
2–Propenoic acid polymer, with 1,3–butadiene and ethenylbenzene, 31713–31716
PROPOSED RULES
Identification of Non-Hazardous Secondary Materials That Are Solid Waste, 31844–31893
National Emission Standards for Hazardous Air Pollutants for Area Sources:
Industrial, Commercial, and Institutional Boilers, 31896–31935
National Emission Standards for Hazardous Air Pollutants for Major Sources:
Industrial, Commercial, and Institutional Boilers and Process Heaters, 32006–32073
Nondiscrimination on the Basis of Age in Programs or Activities Receiving Federal Assistance from the Environmental Protection Agency, 31738–31742
Standards of Performance for New Stationary Sources and Emission Guidelines for Existing Sources:
Commercial and Industrial Solid Waste Incineration Units, 31938–32004
NOTICES
Draft National Pollutant Discharge Elimination System Pesticide General Permit:
Point Source Discharges from the Application of Pesticides, 31775–31785
Environmental Impact Statements; Availability, etc.:
Weekly Receipt, 31785
Pesticide Products; Registration Applications, 31785–31787

Equal Employment Opportunity Commission
NOTICES
Agency Information Collection Activities; Proposals, Submissions, and Approvals, 31787

Federal Aviation Administration
RULES
Amendment of Class E Airspace:
Austin, TX, 31677
Corpus Christi, TX, 31677–31678
PROPOSED RULES
Airworthiness Directives:
Bombardier, Inc. Model BD 700 1A10 and BD 700 1A11 Airplanes, 31731–31734
GROB–WERKE (Type Certificate Previously Held by BURKHART GROB Luft- und Raumfahrt) Models G115C, G115D and G115D2 Airplanes, 31734–31736

Federal Deposit Insurance Corporation
NOTICES
Agency Information Collection Activities; Proposals, Submissions, and Approvals, 31787–31788

Federal Highway Administration
NOTICES
Environmental Impact Statements; Availability, etc.:
Calvert and St. Mary's Counties, MD, 31835–31836
Tennessee Division; State Route 91 Improvements in Elizabethton, Carter County, TN; Rescinded, 31836

Federal Motor Carrier Safety Administration
NOTICES
Federal Motor Carrier Safety Regulations:
Withdrawal of Regulatory Guidance, 31836–31837

Federal Railroad Administration
NOTICES
Environmental Impact Statements; Availability, etc.:
Reevaluation, 31834–31835

Federal Reserve System
RULES
Electronic Fund Transfers, 31665–31673
Truth in Savings, 31673–31676
NOTICES
Changes in Bank Control; Acquisitions of Shares of Banks or Bank Holding Companies, 31788

Federal Trade Commission
RULES
Disclosures for Non-Federally Insured Depository Institutions Under the Federal Deposit Insurance Corporation Improvement Act, 31682–31688

Fish and Wildlife Service
NOTICES
Endangered and Threatened Wildlife and Plants:
Post-Delisting Monitoring Plan for Bald Eagle (Haliaeetus leucocephalus), 31811
Receipt of Applications for Endangered Species Permits, 31812–31815

Food and Drug Administration
NOTICES
Determination:
Cysteine Hydrochloride Injection, USP, 7.25 Percent, Not Withdrawn from Sale for Reasons of Safety or Effectiveness, 31790–31791
Information Sheet Guidance for Sponsors, Clinical Investigators, and IRBs:
Frequently Asked Questions—Statement of Investigator (Form FDA 1572); Availability, 31794–31795
Pilot Programs:
Substances Generally Recognized as Safe Added to Food for Animals, 31800–31803

Food Safety and Inspection Service
NOTICES
International Standard-Setting Activities, 31749–31759

Foreign-Trade Zones Board
NOTICES
Application for Subzone Authority:
Foreign Trade Zone 203; REC Silicon, 31762–31763
Foreign Trade Zone 29; Dow Corning Corp., 31763

Forest Service
NOTICES
Agency Information Collection Activities; Proposals, Submissions, and Approvals:
Contract Operations and Administration, 31744–31745
Meetings:
Madera County Resource Advisory Committee, 31759–31760

Government Accountability Office
NOTICES
Appointments:
Medicare Payment Advisory Commission, 31788

Grain Inspection, Packers and Stockyards Administration
NOTICES
Meetings:
Advisory Committee, 31760

Health and Human Services Department
See Centers for Medicare & Medicaid Services
See Food and Drug Administration

See Indian Health Service
See National Institutes of Health
RULES
Indian Self-Determination Act Contracts and Annual Funding Agreements:
Appeal Procedures, 31699–31702
NOTICES
Meetings:
National Committee on Vital and Health Statistics, 31789

Homeland Security Department
See U.S. Customs and Border Protection

Housing and Urban Development Department
NOTICES
Federal Property Suitable as Facilities to Assist the Homeless; Republication, 31807–31810
Funding Awards:
Resident Opportunity and Self-Sufficiency Service Coordinators Program (Fiscal Year 2009), 31805–31807

Indian Affairs Bureau
RULES
Indian Self-Determination Act Contracts and Annual Funding Agreements:
Appeal Procedures, 31699–31702
NOTICES
Agency Information Collection Activities; Proposals, Submissions, and Approvals:
IDEIA Part B and C Child Counts, 31810

Indian Health Service
RULES
Indian Self-Determination Act Contracts and Annual Funding Agreements:
Appeal Procedures, 31699–31702

Industry and Security Bureau
RULES
Export Administration Regulations; Technical Corrections, 31678–31682

Interior Department
See Fish and Wildlife Service
See Indian Affairs Bureau
See Land Management Bureau
RULES
Indian Self-Determination Act Contracts and Annual Funding Agreements:
Appeal Procedures, 31699–31702

Internal Revenue Service
PROPOSED RULES
Modifications of Debt Instruments, 31736–31738

International Trade Commission
NOTICES
Meetings; Sunshine Act, 31815

Justice Department
See Antitrust Division
See Justice Programs Office

Justice Programs Office
NOTICES
Meetings:
National Motor Vehicle Title Information System Federal Advisory Committee, 31815

Land Management Bureau
NOTICES
Filing of Plats, 31811–31812
Filing of Plats of Survey:
Montana, 31812

National Archives and Records Administration
NOTICES
Records Schedules; Availability and Request for Comments, 31816–31818

National Highway Traffic Safety Administration
NOTICES
Petitions for Exemption from the Vehicle Theft Prevention Standard:
Mercedes–Benz, 31837–31839
Receipt of Petition for Decision of Inconsequential Noncompliance:
Ford Motor Co., 31839–31840

National Institutes of Health
NOTICES
Government-Owned Inventions; Availability for Licensing, 31791–31794
Meetings:
Center for Scientific Review, 31795–31799
Eunice Kennedy Shriver National Institute of Child Health and Human Development, 31795, 31799–31800
National Cancer Institute, 31796
National Heart, Lung, and Blood Institute, 31796–31797
National Institute of Mental Health, 31799–31800
Office of Biotechnology Activities; Recombinant DNA Research; Cancellation, 31795–31796

National Labor Relations Board
NOTICES
Meetings; Sunshine Act, 31818

National Oceanic and Atmospheric Administration
RULES
Fisheries of the Exclusive Economic Zone Off Alaska:
Pacific Cod for American Fisheries Act Catcher Processors Using Trawl Gear, etc.; Closure, 31717–31718
NOTICES
Agency Information Collection Activities; Proposals, Submissions, and Approvals:
Alaska Region Gear Identification Requirements, 31761–31762

National Science Foundation
NOTICES
Meetings; Sunshine Act, 31818
Permits Issued Under the Antarctic Conservation Act (of 1978), 31819

Patent and Trademark Office
NOTICES
Meetings:
Enhanced Examination Timing Control Initiative, 31763–31768

Personnel Management Office
NOTICES
Privacy Act of 1974; Computer Matching Program, 31819–31820

Postal Regulatory Commission
NOTICES
Meetings; Sunshine Act, 31820

Postal Service
RULES
General Information on Postal Service, 31702

Securities and Exchange Commission
NOTICES
Applications for Deregistration under Section 8(f) of the Investment Company Act (of 1940), 31820–31822
Meetings; Sunshine Act, 31822–31823
Self-Regulatory Organizations; Proposed Rule Changes:
Chicago Board Options Exchange, Inc., 31823–31830
Financial Industry Regulatory Authority, Inc., 31825–31826
NASDAQ OMX PHLX, Inc., 31830–31834

Transportation Department
See Federal Aviation Administration
See Federal Highway Administration
See Federal Motor Carrier Safety Administration
See Federal Railroad Administration
See National Highway Traffic Safety Administration

Treasury Department
See Comptroller of the Currency
See Internal Revenue Service

U.S. Customs and Border Protection
NOTICES
Final Determination Concerning a Lift Unit for an Overlead Patient Lift System, 31803–31805

Veterans Affairs Department
NOTICES
Meetings:
Advisory Committee on Disability Compensation, 31842

Separate Parts In This Issue

Part II
Environmental Protection Agency, 31844–31893

Part III
Environmental Protection Agency, 31896–31935

Part IV
Environmental Protection Agency, 31938–32004

Part V
Environmental Protection Agency, 32006–32073

Reader Aids
Consult the Reader Aids section at the end of this page for phone numbers, online resources, finding aids, reminders, and notice of recently enacted public laws.

To subscribe to the Federal Register Table of Contents LISTSERV electronic mailing list, go to http://listserv.access.gpo.gov and select Online mailing list archives, FEDREGTOC-L, Join or leave the list (or change settings); then follow the instructions.

CFR PARTS AFFECTED IN THIS ISSUE

A cumulative list of the parts affected this month can be found in the Reader Aids section at the end of this issue.

7 CFR
923 31663
Proposed Rules:
930 31719
1215 31730

12 CFR
205 31665
230 31673

14 CFR
71 (2 documents) 31677
Proposed Rules:
39 (2 documents) 31731, 31734

15 CFR
734 31678
740 31678
744 31678
748 31678
750 31678
766 31678
774 31678

16 CFR
320 31682
1215 (2 documents) 31688, 31691

25 CFR
900 31699
1000 31699

26 CFR
Proposed Rules:
1 31736

39 CFR
111 31702

40 CFR
7 31702
52 (2 documents) 31709, 31711
180 31713
260 31716
261 31716
262 31716
263 31716
264 31716
265 31716
266 31716
268 31716
270 31716
Proposed Rules:
7 31738
60 31938
63 (2 documents) 31896, 32006
241 31844

50 CFR
679 31717

Rules and Regulations

Federal Register
Vol. 75, No. 107
Friday, June 4, 2010

This section of the FEDERAL REGISTER contains regulatory documents having general applicability and legal effect, most of which are keyed to and codified in the Code of Federal Regulations, which is published under 50 titles pursuant to 44 U.S.C. 1510.

The Code of Federal Regulations is sold by the Superintendent of Documents. Prices of new books are listed in the first FEDERAL REGISTER issue of each week.

DEPARTMENT OF AGRICULTURE

Agricultural Marketing Service

7 CFR Part 923

[Doc. No. AMS–FV–09–0033; FV09–923–1 FR]

Sweet Cherries Grown in Designated Counties in Washington; Change in the Handling Regulation

AGENCY: Agricultural Marketing Service, USDA.

ACTION: Final rule.

SUMMARY: This rule revises the handling regulation for cherries under the Washington cherry marketing order. The marketing order regulates the handling of sweet cherries grown in designated counties in Washington and is administered locally by the Washington Cherry Marketing Committee (Committee). This rule adds quality and pack requirements for Rainier cherries and other lightly-colored sweet cherry varieties that are designated as "premium" when handled. This change is expected to reduce market confusion regarding the marketing of such cherries; improve producer returns by providing pack differentiation; and benefit producers, handlers, and consumers.

DATES: *Effective Date:* June 5, 2010.

FOR FURTHER INFORMATION CONTACT: Robert Curry or Gary Olson, Northwest Marketing Field Office, Marketing Order Administration Branch, Fruit and Vegetable Programs, AMS, USDA, 1220 SW Third Avenue, Suite 385, Portland, Oregon 97204; Telephone: (503) 326–2724, Fax: (503) 326–7440, or E-mail: *Robert.Curry@ams.usda.gov* or *GaryD.Olson@ams.usda.gov.*

Small businesses may request information on complying with this regulation by contacting Antoinette Carter, Marketing Order Administration Branch, Fruit and Vegetable Programs, AMS, USDA, 1400 Independence Avenue SW., STOP 0237, Washington, DC 20250–0237; Telephone: (202) 720–2491, Fax: (202) 720–8938, or E-mail: *AntoinetteCarter@ams.usda.gov.*

SUPPLEMENTARY INFORMATION: This rule is issued under Marketing Agreement and Order No. 923, both as amended (7 CFR part 923), regulating the handling of cherries grown in designated counties in Washington, hereinafter referred to as the "order." The order is effective under the Agricultural Marketing Agreement Act of 1937, as amended (7 U.S.C. 601–674), hereinafter referred to as the "Act."

The Department of Agriculture (USDA) is issuing this rule in conformance with Executive Order 12866.

This rule has been reviewed under Executive Order 12988, Civil Justice Reform. This rule is not intended to have retroactive effect.

The Act provides that administrative proceedings must be exhausted before parties may file suit in court. Under section 608c(15)(A) of the Act, any handler subject to an order may file with USDA a petition stating that the order, any provision of the order, or any obligation imposed in connection with the order is not in accordance with law and request a modification of the order or to be exempted therefrom. A handler is afforded the opportunity for a hearing on the petition. After the hearing, USDA would rule on the petition. The Act provides that the district court of the United States in any district in which the handler is an inhabitant, or has his or her principal place of business, has jurisdiction to review USDA's ruling on the petition, provided an action is filed not later than 20 days after the date of the entry of the ruling.

This final rule changes the handling regulation for cherries under the order. Specifically, this rule adds minimum requirements for Rainier cherries and other lightly-colored sweet cherry varieties that are designated as "premium" when marketed. Under this regulation, when labeled "premium, a Rainier cherry or other lightly-colored sweet cherry variety container must be packed so that at least 90 percent, by count, of the cherries in any lot shall measure not less than 64/64 inch (10½ row) in diameter and not more than 5 percent, by count, may be less than 61/64 inch (11-row) in diameter. In addition, 90 percent, by count, of the cherries in any lot must exhibit a pink-to-red surface blush. For any given sample, not more than 20 percent of the cherries shall be absent a pink-to-red surface blush.

This change is intended to reduce market confusion and improve producer returns by providing pack differentiation, and is expected to benefit producers, handlers, and consumers.

Section 923.52 of the order authorizes the establishment of grade, size, quality, maturity, pack, and container regulations for any variety or varieties of cherries grown in the production area. Section 923.53 further authorizes the modification, suspension, or termination of regulations issued under § 923.52. Section 923.55 provides that whenever cherries are regulated pursuant to § 923.52 or § 923.53, such cherries must be inspected by the Federal-State Inspection Service and certified as meeting the applicable requirements of such regulations.

Section 923.322 of the order's rules and regulations currently provide grade, size, maturity, and pack regulations for Washington grown sweet cherries. Rainier cherries and other lightly-colored sweet cherry varieties have variety-specific minimum size and maturity requirements as well as the same pack requirements as all Washington sweet cherries, but do not share the minimum grade requirements with dark colored cherries.

As just stated, Rainier cherries and other lightly-colored sweet cherry varieties have certain current mandatory grading requirements, including a minimum maturity requirement of 17 percent soluble solids and a minimum size requirement of 61/64 inch diameter (11-row) as provided in section 923.322(c). However, lightly-colored varieties are not currently required to meet a minimum grade or pack standard. As a consequence, the cherry industry markets several different qualities or packs of lightly colored sweet cherries without the benefit of any clear differentiation between competing products. This lack of differentiation in the marketing of lightly-colored sweet cherries has led to market confusion and downward pricing pressure in recent years.

The worldwide retail trade is currently demanding a consistently

large lightly-colored sweet cherry that arrives with a pink to red blush on its external surface. Likewise, the retail trade is willing to pay a premium price for large lightly-colored sweet cherries that consistently exhibit this surface blush. Conversely, the market for lightly-colored sweet cherries without a blush—cherries pure yellow in color—is decreasing and this sub-group of cherries is generally sold at a lower market price. Prior to this change in the handling regulations, there was no clear articulation of a "premium" designation within the lightly-colored cherry category, and buyers have used the price of the packs containing all-yellow cherries to put downward pricing pressure on cherries that have been produced with the preferred pink-to-red blush.

With this change, industry handlers will be able to differentiate packs of lightly colored cherries and the price point that comes with producing a superior sweet cherry. It is also expected that the change will add further incentive to produce superior quality sweet cherries and strengthen the producer's position in the marketplace.

This rule requires any regulated handler packing cherries with the "premium" designation to adhere to the new requirements as provided in new section 923.322(e). All cherries not so designated continue to be allowed to be marketed without regard to the new requirements. Nevertheless, all sweet cherries must continue to meet the other minimum requirements of the order and the order's regulations.

Further changes are made to § 923.322 to reflect the addition of the new requirements. The existing paragraph (e) is redesignated as paragraph (d), and the introductory sentence of paragraph (g) is revised to reference the new paragraph (e).

Final Regulatory Flexibility Analysis

Pursuant to requirements set forth in the Regulatory Flexibility Act (RFA) (5 U.S.C. 601–612), the Agricultural Marketing Service (AMS) has considered the economic impact of this action on small entities. Accordingly, AMS has prepared this final regulatory flexibility analysis.

The purpose of the RFA is to fit regulatory actions to the scale of business subject to such actions in order that small businesses will not be unduly or disproportionately burdened. Marketing orders issued pursuant to the Act, and the rules issued thereunder, are unique in that they are brought about through group action of essentially small entities acting on their own behalf.

There are approximately 44 handlers of Washington sweet cherries subject to regulation under the marketing order and approximately 1,500 cherry producers in the regulated area. Small agricultural service firms are defined by the Small Business Administration (SBA) (13 CFR 121.201) as those having annual receipts of less than $7,000,000, and small agricultural producers are defined as those having annual receipts of less than $750,000.

Based on the 2005–2007 three-year average fresh cherry utilization of 121,666 tons and average fresh cherry producer price of $2,400 per ton as reported by the National Agricultural Statistics Service, USDA, and 1,500 Washington cherry producers, the recent three-year average annual producer revenue was approximately $194,666. In addition, the Committee reports that none of the 44 handlers have annual receipts of over $7,000,000. Based on this information, the majority of Washington sweet cherry producers and handlers may be classified as small entities.

Utilizing authority contained in sections 923.52, 923.53, and 923.55, the Committee recommended that a definition for premium packed lightly-colored sweet cherries be added to section 923.322(h) in the order's handling regulation to identify the minimum size and color requirements that a premium packed cherry must meet. In addition, to help stabilize the negative pricing pressure that some unmarked grades have on the market, the Committee recommended adding a new paragraph 923.322(e)(3) to this subpart establishing a requirement that all cherries packed in containers marked "premium" must adhere to the definition.

USDA subsequently determined that, rather than adding a new definition, it would be more appropriate to add minimum requirements for cherries that are designated as "premium" to section 923.322 of the handling regulation.

The Committee reports that cherry size and quality are important to buyers. Consistency and dependability are equally important. In recent seasons, there has not been marketing consistency in the quality and size of lightly-colored cherries. This has resulted in a price depressing pressure on all cherries, regardless of the quality, color, and size of the fruit packed.

Cherry size is related to maturity and other quality factors. That is, larger sized cherries tend to be sweeter and of higher overall quality, and thus generally provide higher prices for the producer. Although AMS Market News Service data is not reported for Rainier cherries smaller than 10½ row (1-inch diameter), this correlation is supported by prices received for Bing cherries of various sizes. For example, the Market News Service reported f.o.b. prices for 12-row sized Bing cherries (54/64 inch diameter) of $24.00 per carton in late June 2007. Concurrently, 10½ row size Bing cherries were selling for $35.00 to $36.00 per carton (10½ row Rainier cherries were being quoted by Market News at $35.00 to $40.00 per carton in late June 2007). This price relationship generally holds steady throughout each season. Furthermore, market research by the Washington cherry industry shows that larger sizes correlate with higher maturity levels, and that larger sizes are preferred by consumers.

Although research showing a correlation between the flavor of lightly-colored sweet cherry varieties and the degree of reddish blush is lacking, actual market experience has shown the industry that a definite price correlation exists according to remarks made at the May 14, 2009 Committee meeting. This is largely due to consumer preference for lightly colored cherries that exhibit a reddish blush.

The Committee believes that this change will not negatively impact either small or large handlers or producers. Comments made at the May 14, 2009 meeting indicate that a majority of the Washington sweet cherry industry is already packing to such standards or better. Comments also indicate that it is possible to control the amount of blush on lightly-colored sweet cherries, since the added color is related to the amount of direct sunlight available to the fruit. Pruning and other common cultural practices can greatly affect the amount of blush on the cherries by controlling how much direct sunlight makes it though the foliage to the fruit. Finally, since this change is only required should a handler choose to pack and mark lightly-colored cherries to the "premium" standard, any additional costs can be eliminated by the handler.

Among the alternative actions discussed by the Committee at the May 14, 2009 meeting was a potential requirement that there be a minimum percentage of reddish color on all lightly colored sweet cherries, as well as a mandatory increase in the minimum size (currently 11-row size or 61/64 minimum diameter). There were other various options briefly discussed under this alternative related to sizing and the actual degree of blush. Comments from many of those attending the meeting, however, indicated that a mandatory change in size and pack requirements

would not be well received by the industry at this time, and that the less restrictive recommendation subsequently made should adequately solve the current marketing problem.

This rule does not impose any additional reporting or recordkeeping requirements on either small or large sweet cherry handlers. As with all Federal marketing order programs, reports and forms are periodically reviewed to reduce information requirements and duplication by industry and public sector agencies. In addition, USDA has not identified any relevant Federal rules that duplicate, overlap or conflict with this rule.

AMS is committed to complying with the E-Government Act, to promote the use of the Internet and other information technologies to provide increased opportunities for citizen access to government information and services, and for other purposes.

In addition, the Committee meeting was widely publicized throughout the Washington cherry industry and all interested persons were invited to attend the meeting and participate in the deliberations. Like all Committee meetings, the May 14, 2009 meeting was a public meeting and all entities, both large and small, were able to express their views on this issue.

A proposed rule concerning this action was published in the **Federal Register** on March, 8, 2010 (75 FR 10442). Copies of the rule were made available to all Committee members and sweet cherry handlers. The proposed rule was also made available through the Internet by USDA and the Office of the Federal Register. A 60-day comment period ending May 7, 2010, was provided to allow interested persons to respond to the proposal. No comments were received.

A small business guide on complying with fruit, vegetable, and specialty crop marketing agreements and orders may be viewed at: *http://www.ams.usda.gov/AMSv1.0/ams.fetchTemplateData.do?template=TemplateN&page=MarketingOrdersSmallBusinessGuide.* Any questions about the compliance guide should be sent to Antoinette Carter at the previously mentioned address in the **FOR FURTHER INFORMATION CONTACT** section.

After consideration of all relevant matter presented, including the information and recommendation submitted by the Committee and other available information, it is hereby found that this rule, as hereinafter set forth, will tend to effectuate the declared policy of the Act.

It is further found that good cause exists for not postponing the effective date of this rule until 30 days after publication in the **Federal Register** (5 U.S.C. 553) because the 2010 cherry harvest may start as early as the last week in May and handlers will want to take advantage of the potential economic benefits of this rule. Further, handlers are aware of this rule, which was recommended at a public meeting. Finally, a 60-day comment period was provided for in the proposed rule.

List of Subjects in 7 CFR Part 923

Cherries, Marketing agreements, Reporting and recordkeeping requirements.

■ For the reasons set forth in the preamble, 7 CFR part 923 is amended as follows:

PART 923—SWEET CHERRIES GROWN IN DESIGNATED COUNTIES IN WASHINGTON

■ 1. The authority citation for 7 CFR part 923 continues to read as follows:

Authority: 7 U.S.C. 601–674.

■ 2. In § 923.322, redesignate paragraph (e) as paragraph (d), add a new paragraph (e), and revise the introductory sentence of paragraph (g) to read as follows:

§ 923.322 Washington cherry handling regulation.

* * * * *

(e) *Light sweet cherries marked as premium.* No handler shall handle, except as otherwise provided in this section, any package or container of Rainier cherries or other varieties of lightly colored sweet cherries marked as premium except in accordance with the following:

(1) *Quality.* 90 percent, by count, of such cherries in any lot must exhibit a pink-to-red surface blush and, for any given sample, not more than 20 percent of the cherries shall be absent a pink-to-red surface blush.

(2) *Pack.* At least 90 percent, by count, of the cherries in any lot shall measure not less than 64/64 inch (10½ row) in diameter and not more than 5 percent, by count, may be less than 61/64 inch (11-row) in diameter.

* * * * *

(g) *Exceptions.* Any individual shipment of cherries which meets each of the following requirements may be handled without regard to the provisions of paragraphs (a), (b), (c), (d), and (e) of this section, and of §§ 923.41 and 923.55.

* * * * *

Dated: May 28, 2010.

Rayne Pegg,

Administrator, Agricultural Marketing Service.

[FR Doc. 2010–13408 Filed 6–3–10; 8:45 am]

BILLING CODE 3410–02–P

FEDERAL RESERVE SYSTEM

12 CFR Part 205

[Regulation E; Docket No. R–1343]

Electronic Fund Transfers

AGENCY: Board of Governors of the Federal Reserve System.

ACTION: Final rule.

SUMMARY: On November 17, 2009, the Board published a final rule amending Regulation E, which implements the Electronic Fund Transfer Act, and the official staff commentary to the regulation (Regulation E final rule). The Regulation E final rule limited the ability of financial institutions to assess overdraft fees for paying automated teller machine (ATM) and one-time debit card transactions that overdraw a consumer's account, unless the consumer affirmatively consents, or opts in, to the institution's payment of overdrafts for those transactions. The Board is amending Regulation E and the official staff commentary to clarify certain aspects of the Regulation E final rule.

DATES: This rule is effective July 6, 2010.

FOR FURTHER INFORMATION CONTACT: Dana E. Miller or Vivian W. Wong, Senior Attorneys, or Ky Tran-Trong, Counsel, Division of Consumer and Community Affairs, at (202) 452–3667 or (202) 452–2412, Board of Governors of the Federal Reserve System, 20th and C Streets, NW., Washington, DC 20551. For users of Telecommunications Device for the Deaf (TDD) only, contact (202) 263–4869.

SUPPLEMENTARY INFORMATION:

I. Background

In November 2009, the Board adopted a final rule under Regulation E, which implements the Electronic Fund Transfer Act (EFTA), limiting a financial institution's ability to assess fees for paying ATM and one-time debit card transactions pursuant to the institution's overdraft service without the consumer's affirmative consent. The rule was published in the **Federal Register** in November 2009 and has a mandatory compliance date of July 1, 2010. *See* 74 FR 59033 (November 17, 2009) (Regulation E final rule).

Since publication of the Regulation E final rule, institutions have requested clarification of particular aspects of the rule and further guidance regarding compliance with the rule. In addition, certain technical corrections are necessary. Accordingly, the Board proposed to amend Regulation E and the official staff commentary. *See* 75 FR 9120 (March 1, 2010).

The Board received approximately 90 comments on the proposal, including from financial institutions and their trade associations, as well as consumer groups. As described in Part III of this **SUPPLEMENTARY INFORMATION,** the final rule adopts the proposal largely as proposed, with additional commentary. Separately, the Board is also amending Regulation DD elsewhere in today's **Federal Register** to make certain clarifications and conforming amendments in light of provisions adopted in the Regulation E final rule.

II. Statutory Authority

The EFTA, 15 U.S.C. 1693 *et seq.,* is implemented by the Board's Regulation E (12 CFR part 205). The purpose of the act and regulation is to provide a framework establishing the rights, liabilities, and responsibilities of participants in electronic fund transfer systems. An official staff commentary interprets the requirements of Regulation E (12 CFR part 205 (Supp. I)). In the **SUPPLEMENTARY INFORMATION** to the Regulation E final rule, the Board described its statutory authority and applied that authority to the requirements of the rule. For purposes of this rulemaking, the Board continues to rely on the description of its legal authority and analysis in the Regulation E final rule.

III. Section-by-Section Analysis

A. Section 205.17(a)—Definition

Section 205.17(a) of the Regulation E final rule defines the term "overdraft service" for purposes of § 205.17. In particular, § 205.17(a)(3) of the final rule explains that the term does not include payments of overdrafts pursuant to, among other things, credit exempt from Regulation Z pursuant to 12 CFR 226.3(d), which is credit secured by margin securities in brokerage accounts extended by Securities and Exchange Commission or Commodity Futures Trading Commission-registered broker-dealers. Comment 17(a)–1 provided further guidance on this exception. However, comment 17(a)–1 inadvertently stated that "§ 205.17(a)(3) does not apply" to margin credit transactions. As adopted, this would mean that the exception to the definition of "overdraft service" in § 205.17(a)(3) does not apply to margin credit. The Board proposed to revise comment 17(a)–1 to eliminate the incorrect reference. The Board did not receive comment on this provision, which is adopted as proposed.

B. Section 205.17(b)—Opt-In Requirement

17(b)(1), 17(b)(4)—General Rule and Scope of Opt-In; Notice and Opt-In Requirements

Section 205.17(b)(1) of the Regulation E final rule prohibits an account-holding financial institution from assessing a fee or charge on a consumer's account for paying an ATM or one-time debit card transaction that overdraws the account, unless the institution satisfies several requirements, including providing consumers notice and obtaining the consumer's affirmative consent to the overdraft service. Section 205.17(b)(4) provides an exception from the notice and opt-in requirements of § 205.17(b)(1) for institutions that have a policy and practice of declining ATM and one-time debit card transactions for which authorization is requested, when the institution has a reasonable belief that the consumer's account has insufficient funds at the time of the authorization request.

Since the issuance of the Regulation E final rule, questions have been raised as to whether the § 205.17(b)(4) exception would permit institutions with such a policy and practice to assess an overdraft fee without the consumer's affirmative consent if a transaction, authorized on the belief that there are sufficient funds, settles on insufficient funds. To clarify the intended scope of this provision, the Board proposed to amend §§ 205.17(b)(1), (b)(4), and the related commentary to explain that the fee prohibition in § 205.17(b)(1) applies to all institutions, and that § 205.17(b)(4) provides relief only from the requirements of §§ 205.17(b)(1)(i)–(iv), including the notice and opt-in requirements. The proposal thus clarified the Board's intent that institutions cannot assess a fee for the payment of ATM and one-time debit card overdrafts if the consumer does not opt in, even if the institution has a policy and practice of declining ATM and one-time debit card transactions upon a reasonable belief that an account has insufficient funds.

Many industry commenters argued that the Board should interpret § 205.17(b)(4) to exempt institutions with a policy and practice of declining ATM and one-time debit card transactions upon a reasonable belief that an account has insufficient funds from the fee prohibition, as well as from the notice and opt-in requirements of the rule. These commenters argued that for those institutions without formal overdraft programs, overdrafts will occur only in circumstances outside the institution's control, and that consumers should retain the responsibility to balance their checking accounts. For example, an institution may authorize a one-time debit card transaction on the reasonable belief that there are sufficient funds in the account, but intervening transactions, such as checks, may reduce the available funds in the checking account before the transaction is presented for settlement, causing an overdraft. Thus, these commenters stated that § 205.17(b)(4) should be revised to permit such institutions to charge overdraft fees without the consumer's affirmative consent. Other industry commenters disagreed with the Board's position, but supported the Board's effort to clarify the scope of the provision. For further clarity, these commenters suggested revisions to the language of § 205.17(b)(4), or removal of that provision as superfluous. Consumer group commenters strongly supported the proposed clarification for the reasons expressed by the Board in its proposal.

The final rule does not provide any exceptions for allowing overdraft fees for ATM and one-time debit card transactions to be imposed without consumer consent. For clarity, however, the Board is deleting § 205.17(b)(4) and instead incorporating its content into a revised comment to § 205.17(b)(1). For the reasons explained in the **SUPPLEMENTARY INFORMATION** to the Regulation E final rule, as well as the March 2010 proposed rule, the Board believes that adopting exceptions to the fee prohibition would undermine the consumer's ability to understand the institution's overdraft practices and to make an informed choice. 74 FR 59045; 75 FR 9121. Moreover, permitting fees on transactions that are authorized on sufficient funds but settle on insufficient funds would create a disincentive to resolve inefficiencies in payment systems and in processing procedures, which would not benefit consumers.

The final rule clarifies that the prohibition on assessing overdraft fees under § 205.17(b)(1) applies to *all* institutions, including those institutions that have a policy and practice of declining to authorize and pay any ATM or one-time debit card transactions when they have a reasonable belief at the time of the authorization request

that the consumer does not have sufficient funds available to cover the transaction.[1] Section 205.17(b)(4) of the Regulation E final rule and the proposed amendments to that section in the March 2010 proposal were designed to clarify the obligations of institutions with such a policy and practice. However, because § 205.17(b)(1) contains a general prohibition on charging overdraft fees unless certain requirements are fulfilled, the Board concludes that it is unnecessary to include a separate section with respect to those institutions. Accordingly, the final rule deletes § 205.17(b)(4) and instead addresses this issue by adding a comment to § 205.17(b)(1). The placement of this provision in new comment 17(b)(1)–1.iv does not, however, alter the substance of the rule.

The Regulation E final rule (and in a slightly revised iteration, the March 2010 proposed rule) also included language in § 205.17(b)(4), and related comment 17(b)(4)–1, explaining the application of § 205.17(b)(4) to accounts on an account type-by-account type basis. These provisions were designed to provide guidance where institutions may follow different practices for different types of accounts. A few commenters suggested that the Board revise or delete these provisions as unnecessary because, if a financial institution does not charge overdraft fees on a given account for ATM or one-time debit card transactions, there should be no obligation to comply with the requirements of § 205.17(b)(1)(i)–(iv). The Board agrees, and for simplicity has deleted the language and accompanying comment.

17(b)(1)(iv)—Confirmation

Section 205.17(b)(1)(iv) states that an institution must provide the consumer a confirmation of his or her opt-in choice in writing, or electronically if the consumer agrees, before charging overdraft fees. The confirmation helps ensure that a consumer intended to opt into an institution's overdraft service, particularly where a consumer has opted in by telephone, by providing the consumer with a record of that choice. Some institutions have asked whether the confirmation required by § 205.17(b)(1)(iv) must be provided to the consumer before the institution may assess overdraft fees.

The Board proposed to revise comment 17(b)–7 to clarify that an institution may not assess any overdraft fees or charges on the consumer's account until the institution has sent the written confirmation. To address concerns about operational and litigation risks related to tracking compliance with the confirmation requirement, the proposed comment also stated that an institution complies with § 205.17(b)(1)(iv) if it has adopted reasonable procedures designed to ensure that the written confirmation is sent before fees are assessed.

Consumer group commenters argued that fees should not be charged until five business days after the institution sends the customer the written confirmation. This time frame, they argued, would provide sufficient time for a consumer to receive the confirmation and to affirm his or her choice. Industry commenters argued that institutions should be permitted to charge fees as soon as the consumer has provided consent and before the written confirmation is provided to the consumer. These commenters also stated that the rule should permit the written confirmation to be provided promptly or by the end of the business day following the consumer's opt-in. The Board is adopting the comment substantially as proposed, with revisions designed to prevent evasion of the confirmation requirement.

The rule does not require receipt of the confirmation by the consumer before an institution may impose a fee because a consumer may not opt into an institution's overdraft service until the time the service is needed. Requiring receipt of the confirmation would delay the consumer's access to overdraft funds. By contrast, permitting fees to be charged once the confirmation is provided allows institutions to pay the transaction with minimal delay to the consumer, in accordance with the consumer's direction. At the same time, if fees cannot be charged until the confirmation has been provided, institutions would be incented to mail or deliver the written confirmation promptly. This would alert consumers to their choice quickly and enable them to revoke their choice if they did not intend to opt in. The requirement to provide the confirmation before charging overdraft fees thus balances the objective of ensuring that consumers understand their choice with the objective of providing consumers access to overdraft services expeditiously when requested.

Some industry commenters argued that consumers may have an emergency during non-bank hours, and need immediate access to funds. Such instances would presumably be rare. Moreover, the rule does not prohibit institutions from paying the overdraft, so long as an overdraft fee is not charged.

Several commenters asked the Board to clarify what is meant by "sent" when a confirmation notice is provided in person (for instance, at a branch). In response, the final comment has been revised to indicate that the confirmation notice must be "mailed or delivered" (for example, by handing the consumer the confirmation in a branch). In addition, a few commenters suggested that the Board revise the comment, which references a written confirmation, to recognize that the confirmation may also be provided electronically if the consumer agrees, consistent with § 205.17(b)(1)(iv). The final comment has been revised by eliminating the references to "written confirmation" and replacing them with the more generic term "confirmation."

The Board has also received questions as to whether the confirmation, as well as the opt-in notice required by § 205.17(b)(1)(i), may be provided orally. As specified in the Regulation E final rule, these disclosures must be provided in writing, or electronically if the consumer agrees, before the institution assesses any overdraft fees for ATM and one-time debit card transactions that overdraw the consumer's account. Further, § 205.4(a) of Regulation E generally requires disclosures to be clear and readily understandable, and in a form the consumer may keep. Oral disclosures would not comply with the requirements of §§ 205.17(b)(1)(i) or (b)(1)(iv).

Upon further analysis, the Board is concerned about possible circumvention of the fee prohibition. The proposed comment stated that the institution may not assess overdraft fees until the confirmation is sent, but it did not expressly tie the mailing or delivery of the confirmation to the payment of the transaction. Therefore, the proposal might arguably be read to permit institutions to pay a transaction into overdraft before the confirmation is sent and simply wait to assess a fee on an account until after the confirmation is sent. As discussed below, final comment 17(b)–7 has been revised to clarify that fees or charges may generally be assessed only on transactions paid after the confirmation has been mailed or delivered. An interpretation tying the confirmation with the payment of transactions is consistent with comment 17(c)–2, adopted in the Regulation E final rule, which clarified that institutions may only assess overdraft fees on

[1] The Board is also adopting conforming revisions to § 205.17(b)(1).

transactions paid after obtaining the consumer's affirmative consent.[2]

The Board recognizes the operational and litigation risks related to compliance with the confirmation requirement. Final comment 17(b)–7 therefore provides that an institution complies with the confirmation requirement if it has adopted reasonable procedures designed to ensure that overdraft fees are assessed only in connection with transactions paid after the confirmation has been mailed or delivered to the consumer. Thus, an institution that adopts and follows such procedures complies with the rule even if on rare occasion, notwithstanding such procedures, it assesses a fee before the confirmation is mailed or delivered. For example, an institution complies with the rule if a computer error results in the confirmation being mailed after an overdraft fee is assessed.

Comment 17(b)–8—Outstanding Negative Balance

While many institutions charge the same per-item overdraft fee regardless of the amount of the consumer's negative balance, some institutions impose tiered fees based on the amount of the consumer's outstanding negative balance at the end of the day. For example, an institution may impose a $10 per-item overdraft fee if the consumer's account is overdrawn by less than $20, and a $25 per-item overdraft fee if the account is overdrawn by $20 or more. Questions have been raised as to how overdraft fees may be assessed in these circumstances if a consumer has not opted into the payment of ATM and one-time debit card transactions, but if overdrafts may be paid and fees assessed for other types of transactions, such as checks and ACH.

Proposed comment 17(b)–8 addressed how institutions may impose tiered fees based on the amount of the consumer's outstanding negative balance if a consumer has not opted into the payment of ATM or one-time debit card overdrafts. In such circumstances, the proposal stated that the fee or charge must be based on the amount of the negative balance attributable solely to check, ACH, or other types of transactions not subject to the fee prohibition. An industry commenter observed that the proposed treatment of tiered fees under the comment was inconsistent with the treatment of flat per-item overdraft fees (that is, fees that do not vary from transaction to transaction) under the rule. For example, if a consumer who has not opted in has a beginning balance of $10, and the institution pays a $30 point-of-sale transaction and a $20 check, resulting in a negative balance of $40, an institution would be permitted to charge a flat per-item fee on the check transaction without regard to the point-of-sale transaction. Under proposed comment 17(b)–8, however, the institution would be required to disregard the $30 point-of-sale transaction in determining the applicable fee tier.

The commenter also argued that the treatment of tiered fees under proposed comment 17(b)–8 differed from the treatment of daily or sustained, negative balance, or other similar fees or charges under proposed comment 17(b)–9. Thus, the commenter argued that proposed comment 17(b)–8 should be revised, consistent with the treatment of flat per-item overdraft fees and sustained overdraft fees under comment 17(b)–9. By contrast, consumer group commenters argued that comment 17(b)–9 should instead be modeled after proposed comment 17(b)–8, such that sustained overdraft fees could only be charged if the negative balance was attributable solely to a type of transaction not subject to the opt-in right.

Upon further analysis, the Board believes that proposed comment 17(b)–8, if adopted, could result in unfavorable consequences for consumers. Section 205.17(b)(1) does not prohibit institutions from charging flat per-item overdraft fees on checks, ACH, and other types of transactions not subject to the fee prohibition when a negative balance is attributable in part to such transactions, and in part to ATM or one-time debit card transactions. However, if a consumer does not opt in and an institution charges tiered fees, proposed comment 17(b)–8 would require the institution to program its systems to disregard any ATM or debit card transaction that creates in part a negative balance for purposes of determining the appropriate fee tier. There are significant operational costs associated with disregarding amounts overdrawn by ATM and one-time debit card transactions under the proposed approach to tiered fees. Therefore, institutions may decide to charge a flat per-item fee rather than a tiered fee. Elimination of tiered-fee structures could result in higher overall costs to consumers.[3] Under a tiered-fee approach that is based on the total amount overdrawn, consumers who overdraw their account by a small amount are typically assessed a reduced fee, or fees may be waived altogether. For example, in a tiered-fee structure, an $8 overdraft may result in a lower-tier $5 or $10 fee—or no fee at all—instead of a flat $25 or $30 per-item fee. In many cases, the lower-tier fee is more proportional to the amount overdrawn than the flat per-item fee, which may substantially exceed the amount overdrawn. In such cases, consumers benefit from the lower costs associated with lower-tier fees.

Therefore, final comment 17(b)–8 has been revised for consistency with the treatment of flat per-item fees under the rule. Comment 17(b)–8 states that if a fee or charge is based on the amount of the outstanding negative balance, the rule prohibits the assessment of any such fee if the negative balance is solely attributable to an ATM or one-time debit card transaction, unless the consumer has opted into the institution's overdraft service for ATM or one-time debit card transactions. However, the comment explains that the rule does not prohibit an institution from assessing such a fee if the negative balance is attributable in whole or in part to a check, ACH, or other type of transaction not subject to the fee prohibition in § 205.17(b)(1).

Comment 17(b)–9—Daily or Sustained Overdraft, Negative Balance, or Similar Fees or Charges

Some institutions assess daily or sustained overdraft, negative balance, or similar fees or charges when a consumer has overdrawn an account and has not repaid the amount overdrawn within a specified period of time. For example, if a consumer overdraws his or her account by $30, the institution may assess an overdraft fee of $20. If the consumer does not repay the resulting negative $50 balance by the fifth day, the institution may assess an additional $20 sustained overdraft fee.

In certain circumstances, as discussed above, an ATM or one-time debit card transaction may overdraw a consumer's account, even if the consumer has not opted into the payment of such overdrafts. The proposal addressed whether the prohibition in § 205.17(b)(1) against assessing overdraft fees on ATM and one-time debit card transactions where the consumer has not opted in applies to fees for daily or sustained overdrafts or negative balances.

[2] For ease of reference, a cross-reference to comment 17(b)–7 has been added to comment 17(c)–2.

[3] Because § 205.17(b)(3) prohibits variations in account terms, any increases in overdraft fees resulting from the elimination of a tiered-fee structure would also apply to consumers who have opted in.

A consumer who has not opted into the payment of ATM and one-time debit card overdrafts may sometimes overdraw his or her account as a consequence of the payment both of these transactions and of check, ACH, or other types of transactions not subject to the fee prohibition in § 205.17(b)(1). The proposal also addressed whether a daily or sustained overdraft, negative balance, or similar fee or charge may be assessed if an account is overdrawn based in part on an ATM or one-time debit card transaction and in part to a check, ACH, or other type of transaction not subject to the fee prohibition.

Proposed comment 17(b)–9 explained that for consumers who do not opt into the payment of ATM and one-time debit card overdrafts, where a negative balance is attributable solely to an ATM or one-time debit card transaction, the rule prohibits the assessment of such sustained overdraft fees. However, where the consumer's negative balance is attributable in part to a check, ACH, or other type of transaction not subject to the fee prohibition in § 205.17(b)(1), and in part to an ATM or one-time debit card transaction, the proposed comment explained that an institution is not prohibited from assessing a daily or sustained overdraft, negative balance, or similar fee or charge, even if the consumer has not opted in. The proposed comment included three examples illustrating how fees may be applied when a negative balance is attributable in part to a check, ACH, or other type of transaction not subject to the fee prohibition. These examples were based on certain assumptions, including assumptions regarding the posting order of debits from the account and the allocation of subsequent deposits to those debits.

Consumer group commenters objected to the proposed comment, arguing that sustained overdraft and negative balance fees should be prohibited unless the negative balance is attributable solely to check, ACH or other transactions not subject to the fee prohibition. Industry commenters supported the proposed clarification as consistent with the final rule. However, these commenters objected to the proposed examples, arguing that because institutions generally do not have a posting order policy for deposits, the examples should not address deposit allocation.

The final rule adopts the proposed clarification substantively as proposed. However, the rule also adds a new comment 17(b)–9.iii containing an alternative approach for compliance with the fee prohibition in § 205.17(b)(1) that does not require the institution to consider allocation of deposits to debits. This approach, discussed in more detail below, facilitates compliance for institutions that do not have deposit allocation policies, while potentially resulting in fewer fees for consumers.

Under the Regulation E final rule, consumers who do not opt in may not be assessed overdraft fees for paying ATM or one-time debit card transactions, including daily or sustained overdraft, negative balance, or similar fees or charges. Consumers who do not opt in may reasonably expect not to incur per-item overdraft fees for ATM and one-time debit card transactions, even if such transactions overdraw their accounts. Similarly, such consumers would reasonably expect not to incur daily or sustained overdraft, negative balance, or similar fees or charges due to these transactions. Comment 17(b)–9.i explains that if a consumer has not opted into the institution's overdraft service for ATM and one-time debit card transactions, the fee prohibition in § 205.17(b)(1) applies to all overdraft fees or charges for paying those transactions, including but not limited to daily or sustained overdraft, negative balance, or similar fees or charges. Thus, where a consumer's negative balance is attributable solely to an ATM or one-time debit card transaction, the rule prohibits the assessment of such sustained overdraft fees if the consumer has not opted in. For example, if a consumer who has not opted in has a $50 account balance, and the institution nonetheless pays a $60 debit card transaction (and no other transactions occur), the institution may not charge any overdraft fees, including a daily or sustained overdraft, negative balance, or similar fee or charge, for paying that debit card transaction.

The Regulation E final rule applies solely to overdraft fees imposed in connection with ATM and one-time debit card transactions. It does not apply to overdraft fees imposed in connection with other types of transactions, including check, ACH, and recurring debit card transactions. As a result, the rule does not prohibit institutions from imposing daily or sustained overdraft, negative balance, or similar fees or charges associated with paying overdrafts for transactions not covered by the final rule. For example, where a consumer has a $50 account balance, and the institution pays a $60 check, the rule does not prohibit the institution from charging a per-item overdraft fee, as well as a daily or sustained, negative balance, or similar fee or charge if a negative balance remains outstanding.

Comment 17(b)–9.i clarifies that where the consumer's negative balance is attributable in part to a check, ACH, or other type of transaction not subject to the fee prohibition in § 205.17(b)(1), and in part to an ATM or one-time debit card transaction, an institution is not prohibited from assessing a daily or sustained overdraft, negative balance, or similar fee or charge, even if a consumer has not opted in.

The Board believes this result is consistent with the general scope of the Regulation E final rule, which prohibits fees only with respect to ATM and one-time debit card transactions. For example, if a consumer has a $50 account balance, and the institution posts a one-time debit card transaction of $60 and a check transaction of $40 that same day, the institution may charge a per-item fee for the check overdraft (but cannot assess any overdraft fees for the debit card transaction if the consumer has not opted in). Using the same example, the Board believes the institution may also charge a sustained overdraft fee when permitted by the account agreement because the consumer's negative balance is attributable in part to the $40 check, assuming no other transactions occur or deposits are made to the account.

The comment also provides guidance on the date on which such a fee may be assessed. Specifically, comment 17(b)–9.i states that the date is based on the date on which the check, ACH, or other type of transaction not subject to the fee prohibition is paid into overdraft. Because the rule does not cover checks, ACH, or recurring debit card transactions, the Board believes institutions may charge per-item overdraft fees, or sustained or other similar fees. Nonetheless, the Board believes it is appropriate to base the date on which fees may be charged on the date that the transaction not subject to the rule is paid.

Proposed comment 17(b)–9.ii included three examples illustrating how fees may be applied when a negative balance is attributable in part to a check, ACH, or other type of transaction not subject to the fee prohibition in § 205.17(b)(1). The first example demonstrated the general application of the rule. The second example addressed the circumstance where a consumer with an outstanding negative balance makes a deposit that reduces the amount of the negative balance, but does not bring the account current. The third example demonstrated how to determine the date when fees may apply when the check, ACH, or other type of transaction is paid

on a different date than the ATM or one-time debit card transaction that overdraws the account.

The proposed examples set out certain assumptions in order to provide clear guidance. Among the assumptions made were that the institution posts ATM and debit card transactions before it posts other transactions, and that it allocates deposits to debits in the same order in which it posts debits. Thus, the examples assumed that deposits made to the account are allocated first to debit card transactions, then to checks. However, the rule does not require transactions to be posted or deposits to be allocated in the manner set forth in the example. Institutions may post transactions or allocate deposits as permitted by applicable law.

As noted above, industry commenters argued that the assumption relating to deposit allocation order, as well as the example in proposed comment 17(b)–9.ii(b) that takes the allocation of deposits into account, should be eliminated. These commenters argued that institutions generally do not have a posting order policy for deposits. Instead, commenters stated that the examples should permit sustained fees to be charged once the consumer has overdrawn the account (when permitted by the account agreement), until such time the account is brought current.

The final rule prohibits overdraft fees with respect to ATM and one-time debit card transactions if the consumer has not opted in. Therefore, institutions must be able to determine whether a negative balance is attributable solely to these types of transactions, or to transactions on which overdraft fees are permitted. This inquiry is not a static one, however; when the amount of the negative balance is reduced by a deposit but not eliminated, institutions must be able to determine whether they can continue charging fees and still comply with the fee prohibition. Otherwise, if a small-dollar check overdraft occurs at the same time as a larger ATM or one-time debit card overdraft, a consumer would potentially be subject to sustained overdraft fees on the small-dollar check for an extended period of time, even where a deposit would have been sufficient to pay off the amount of the check. The examples demonstrate how an institution can make a determination about the permissibility of charging overdraft fees on an ongoing basis, and are adopted generally as proposed.

The Board recognizes, however, that many institutions do not have specific deposit allocation policies or practices. Accordingly, the commentary to the final rule includes an alternative approach that institutions may use to comply with the fee prohibition in § 205.17(b)(1) that does not require an institution to consider the allocation of deposits. Specifically, comment 17(b)–9.iii provides that, where a consumer has not opted into the payment of ATM or one-time debit card transaction overdrafts, an institution may comply with § 205.17(b)(1) by not assessing daily or sustained overdraft, negative balance, or similar fees or charges unless a consumer's negative balance is attributable solely to checks, ACH or other types of transactions not subject to the fee prohibition, while that negative balance remains outstanding. Under this approach, the institution would not have to consider how to allocate subsequent deposits that reduce but do not eliminate the negative balance. For example, if a consumer has a negative balance of $30, of which $10 is attributable to a one-time debit card transaction, an institution complies with § 205.17(b)(1) if it does not assess a sustained overdraft fee while that negative balance remains outstanding. The Board believes such an approach will facilitate compliance for institutions. In addition, this approach may result in fewer fees for consumers, because institutions would not assess fees while that negative balance is outstanding even if they would otherwise be permitted to under the examples in comment 17(b)–9.ii.

Some industry commenters requested additional time to implement the clarifications in proposed comment 17(b)–9. The Board recognizes that programming systems to conform to the final rule may raise operational and cost concerns, and could be challenging to implement by July 1, 2010. However, the Board believes that by adopting the alternative approach set forth in comment 17(b)–9.iii, many institutions will be able to comply by July 1, 2010. As explained above, the final rule only permits daily or sustained, negative balance, or similar overdraft fees or charges where the negative balance is attributable in whole or in part to a type of transaction not subject to the fee prohibition.

17(b)(3)—Same Account Terms, Conditions, and Features

Comment 17(b)(3)–2 provides guidance on limited-feature deposit account products in light of the requirement under § 205.17(b)(3) to offer consumers the same account terms, conditions, and features regardless of their opt-in choice. This comment inadvertently included an incorrect cross-reference. The proposal revises the comment to omit the cross-reference. No comments were received on the revision, which is adopted as proposed.

17(d)—Content and Format

The Board did not propose revisions to § 205.17(d) and the related commentary regarding content and format of the opt-in notice. However, many industry commenters asked the Board to add commentary to clarify certain aspects of Model Form A–9, particularly because § 205.17(d) requires institutions to use an opt-in notice that is substantially similar to the model form and that contains any applicable content required by § 205.17(d). The Board is adding new comments 17(d)–3 through 17(d)–5 to address a number of these questions. In particular, several commenters had questions about modifications to the tear-off form on Model Form A–9.

Section 205.17(d)(4) requires that the opt-in notice include the methods by which the consumer may consent to the overdraft service for ATM and one-time debit card transactions. New comment 17(d)–3 explains that institutions may tailor Model Form A–9 to the methods offered by the institution. The comment explains that an institution need not provide the tear-off portion of Model Form A–9, for example, if it is only permitting consumers to opt in telephonically or electronically.

In the **SUPPLEMENTARY INFORMATION** to the Regulation E final rule, the Board stated that institutions may, but are not required, to provide a signature line or check box where the consumer can indicate that they decline to opt in (as shown in the model form). Several industry commenters requested that the Board include this statement as a comment. For clarity, the statement has been included in comment 17(d)–3.

New comment 17(d)–4 states an institution may use any reasonable method to identify the account for which the consumer submits the opt-in notice. For example, the institution may include a line for a printed name and an account number, as shown in Model Form A–9. Or, the institution may print a bar code or use other tracking information. (The comment cross-references comment 17(b)–6, which describes how an institution obtains a consumer's affirmative consent.)

Section § 205.17(d)(5) requires institutions that offer a line of credit subject to the Board's Regulation Z or a service that transfers funds from another account of the consumer held at the institution to cover overdrafts to state that fact in the opt-in notice. Because Model Form A–9 includes only a reference to a transfer from a savings account, two commenters suggested that

the Board clarify the § 205.17(d)(5) requirement. Section 205.17(d) states that the notice required by § 205.17(b)(1)(i) must "include all applicable items in this paragraph." Thus, if an institution offers both a line of credit subject to the Board's Regulation Z and a service that transfers funds from another account of the consumer held at the institution to cover overdrafts, the institution must state in its opt-in notice that both alternative plans are offered. If the institution offers one, but not the other, it must state in its opt-in notice the alternative plan that it offers. If the institution does not offer either plan, it should omit the reference to the alternative plans. For clarity, the Board is addressing the issue in a new comment 17(d)–5.

Marketing of Opt-Ins

Commenters also raised questions about how institutions may communicate with their customers about consumers' opt-in choices. Some institutions have asked whether they may provide supplemental materials with the opt-in notices that describe their overdraft services. In footnote 39 to the Regulation E final rule, the Board explained that institutions may provide consumers other information about their overdraft services and other overdraft protection plans in a separate document outside of the opt-in notice. *See* 74 FR at 59047. However, to the extent such additional materials promote the payment of overdrafts under Regulation DD, they may be subject to additional disclosure requirements under 12 CFR 230.11(b). The Board also notes that the opt-in notice may be combined with other materials (*e.g.,* in the same mailing), but that the rule requires the notice to be segregated from all other information. *See* § 205.17(b)(1)(i).

Industry commenters also asked whether opt-ins for multiple accounts may be obtained on one consent form (or in the course of obtaining opt-ins through any other method, such as over the phone or on-line). Any determination as to whether an opt-in has been obtained from a consumer in compliance with the rule depends on the facts and circumstances. However, whether or not a single form is used to obtain consumers' opt-ins, a separate opt-in decision must be made for each account, and the choices must be presented in a clear and readily understandable manner. Thus, a statement on the form that the consumer's signature acts as an opt-in for all of the consumer's accounts is not permissible under the final rule.

In addition, consumer group commenters expressed concern regarding certain marketing tactics that may be used by institutions to provide the required opt-in notices and to obtain consumers' opt-ins. For example, one commenter raised concerns that institutions may be using Short Message Service ("SMS") text messages as a means to provide the opt-in notice. Under the Regulation E final rule, the opt-in notice must be in a form substantially similar to Model Form A–9 and include all of the information specified in the rule. The notice must also be clear and readily understandable, and in a form the consumer may keep. The font size, screen size and character limitations inherent in SMS text messaging raise significant doubts about the ability of SMS text messages to satisfy the Regulation E disclosure requirements.

The Board shares commenters' concerns about the marketing of overdraft services, and is continuing to monitor how institutions are marketing opt-ins. The Board notes that under Regulation DD, advertisements may not be misleading or inaccurate. *See* 12 CFR 230.8(a). Similarly, institutions must not market their overdraft services in a manner that constitutes an unfair or deceptive practice within the meaning of the Federal Trade Commission Act, 15 U.S.C. 41 *et seq.*

The Board also reminds institutions that the 2005 Joint Guidance on Overdraft Protection Programs,[4] discussed in the Regulation E final rule, provides guidance on marketing and communication of overdraft services, as well as guidance regarding the disclosure and operation of program features. In addition to these best practices, the Joint Guidance addresses safety and soundness considerations and legal risks related to offering overdraft services to consumers. While certain aspects of the Joint Guidance have been superseded by subsequent regulatory changes, institutions should consider other aspects of the Joint Guidance that have not been addressed in regulations.

IV. Regulatory Analysis

Sections VII and VIII of the **SUPPLEMENTARY INFORMATION** to the Regulation E final rule set forth the Board's analyses under the Regulatory Flexibility Act (5 U.S.C. 601 *et seq.*) and the Paperwork Reduction Act of 1995 (44 U.S.C. 3506; 5 CFR part 1320 Appendix A.1). *See* 74 FR 59050–59052. Because the final amendments are clarifications and do not alter the substance of the analyses and determinations accompanying the Regulation E final rule, the Board continues to rely on those analyses and determinations for purposes of this rulemaking.

[4] *See* Interagency Guidance on Overdraft Protection Programs, 70 FR 9127, Feb. 24, 2005.

List of Subjects in 12 CFR Part 205

Consumer protection, Electronic fund transfers, Federal Reserve System, Reporting and recordkeeping requirements.

Authority and Issuance

■ For the reasons set forth above, the Board amends 12 CFR part 205 and the Official Staff Commentary, as follows:

PART 205—ELECTRONIC FUND TRANSFERS (REGULATION E)

■ 1. The authority citation for part 205 continues to read as follows:

Authority: 15 U.S.C. 1693b.

■ 2. Section 205.17 is amended by revising paragraph (b)(1) and removing paragraph (b)(4) to read as follows:

§ 205.17 Requirements for overdraft services.

* * * * *

(b) *Opt-in requirement.* (1) *General.* Except as provided under paragraph (c) of this section, a financial institution holding a consumer's account shall not assess a fee or charge on a consumer's account for paying an ATM or one-time debit card transaction pursuant to the institution's overdraft service, unless the institution:

* * * * *

■ 3. In Supplement I to part 205,
■ a. In Section 205.17(a), paragraph 1. is revised.
■ b. In Section 205.17(b), paragraph 7. is revised.
■ c. In Section 205.17(b), new paragraphs 1.iv., 8. and 9. are added.
■ d. In Section 205.17(b)(3), paragraph 2. is revised.
■ e. In Section 205.17(b)(4), paragraph 1. is removed.
■ f. In Section 205.17(c), paragraph 2. is revised.
■ g. In Section 205.17(d), new paragraphs 3. through 5. are added.

Supplement I to Part 205—Official Staff Interpretations

* * * * *

Section 205.17(a)—Requirements for Overdraft Services

17(a) Definition

1. *Exempt securities- and commodities-related lines of credit.* The definition of "overdraft service" does not include the payment of transactions in a securities or

commodities account pursuant to which credit is extended by a broker-dealer registered with the Securities and Exchange Commission or the Commodity Futures Trading Commission.

17(b) Opt-in Requirement

* * * * *

1. *Scope.*

* * * * *

iv. *Application of fee prohibition.* The prohibition on assessing overdraft fees under § 205.17(b)(1) applies to all institutions. For example, the prohibition applies to an institution that has a policy and practice of declining to authorize and pay any ATM or one-time debit card transactions when the institution has a reasonable belief at the time of the authorization request that the consumer does not have sufficient funds available to cover the transaction. However, the institution is not required to comply with §§ 205.17(b)(1)(i)–(iv), including the notice and opt-in requirements, if it does not assess overdraft fees for paying ATM or one-time debit card transactions that overdraw the consumer's account. Assume an institution does not provide an opt-in notice, but authorizes an ATM or one-time debit card transaction on the reasonable belief that the consumer has sufficient funds in the account to cover the transaction. If, at settlement, the consumer has insufficient funds in the account (for example, due to intervening transactions that post to the consumer's account), the institution is not permitted to assess an overdraft fee or charge for paying that transaction.

* * * * *

7. *Confirmation.* A financial institution may comply with the requirement in § 205.17(b)(1)(iv) to provide confirmation of the consumer's affirmative consent by mailing or delivering to the consumer a copy of the consumer's completed opt-in notice, or by mailing or delivering a letter or notice to the consumer acknowledging that the consumer has elected to opt into the institution's service. The confirmation, which must be provided in writing, or electronically if the consumer agrees, must include a statement informing the consumer of the right to revoke the opt-in at any time. *See* § 205.17(d)(6), which permits institutions to include the revocation statement on the initial opt-in notice. An institution complies with the confirmation requirement if it has adopted reasonable procedures designed to ensure that overdraft fees are assessed only in connection with transactions paid after the confirmation has been mailed or delivered to the consumer.

8. *Outstanding Negative Balance.* If a fee or charge is based on the amount of the outstanding negative balance, an institution is prohibited from assessing any such fee if the negative balance is solely attributable to an ATM or one-time debit card transaction, unless the consumer has opted into the institution's overdraft service for ATM or one-time debit card transactions. However, the rule does not prohibit an institution from assessing such a fee if the negative balance is attributable in whole or in part to a check, ACH, or other type of transaction not subject to the prohibition on assessing overdraft fees in § 205.17(b)(1).

9. *Daily or Sustained Overdraft, Negative Balance, or Similar Fee or Charge*

i. *Daily or sustained overdraft, negative balance, or similar fees or charges.* If a consumer has not opted into the institution's overdraft service for ATM or one-time debit card transactions, the fee prohibition in § 205.17(b)(1) applies to all overdraft fees or charges for paying those transactions, including but not limited to daily or sustained overdraft, negative balance, or similar fees or charges. Thus, where a consumer's negative balance is solely attributable to an ATM or one-time debit card transaction, the rule prohibits the assessment of such fees unless the consumer has opted in. However, the rule does not prohibit an institution from assessing daily or sustained overdraft, negative balance, or similar fees or charges if a negative balance is attributable in whole or in part to a check, ACH, or other type of transaction not subject to the fee prohibition. When the negative balance is attributable in part to an ATM or one-time debit card transaction, and in part to a check, ACH, or other type of transaction not subject to the fee prohibition, the date on which such a fee may be assessed is based on the date on which the check, ACH, or other type of transaction is paid into overdraft.

ii. *Examples.* The following examples illustrate how an institution complies with the fee prohibition. For each example, assume the following: (a) The consumer has not opted into the payment of ATM or one-time debit card overdrafts; (b) these transactions are paid into overdraft because the amount of the transaction at settlement exceeded the amount authorized or the amount was not submitted for authorization; (c) under the account agreement, the institution may charge a per-item fee of $20 for each overdraft, and a one-time sustained overdraft fee of $20 on the fifth consecutive day the consumer's account remains overdrawn; (d) the institution posts ATM and debit card transactions before other transactions; and (e) the institution allocates deposits to account debits in the same order in which it posts debits.

a. Assume that a consumer has a $50 account balance on March 1. That day, the institution posts a one-time debit card transaction of $60 and a check transaction of $40. The institution charges an overdraft fee of $20 for the check overdraft but cannot assess an overdraft fee for the debit card transaction. At the end of the day, the consumer has an account balance of negative $70. The consumer does not make any deposits to the account, and no other transactions occur between March 2 and March 6. Because the consumer's negative balance is attributable in part to the $40 check (and associated overdraft fee), the institution may charge a sustained overdraft fee on March 6 in connection with the check.

b. Same facts as in a., except that on March 3, the consumer deposits $40 in the account. The institution allocates the $40 to the debit card transaction first, consistent with its posting order policy. At the end of the day on March 3, the consumer has an account balance of negative $30, which is attributable to the check transaction (and associated overdraft fee). The consumer does not make any further deposits to the account, and no other transactions occur between March 4 and March 6. Because the remaining negative balance is attributable to the March 1 check transaction, the institution may charge a sustained overdraft fee on March 6 in connection with the check.

c. Assume that a consumer has a $50 account balance on March 1. That day, the institution posts a one-time debit card transaction of $60. At the end of that day, the consumer has an account balance of negative $10. The institution may not assess an overdraft fee for the debit card transaction. On March 3, the institution pays a check transaction of $100 and charges an overdraft fee of $20. At the end of that day, the consumer has an account balance of negative $130. The consumer does not make any deposits to the account, and no other transactions occur between March 4 and March 8. Because the consumer's negative balance is attributable in part to the check, the institution may assess a $20 sustained overdraft fee. However, because the check was paid on March 3, the institution must use March 3 as the start date for determining the date on which the sustained overdraft fee may be assessed. Thus, the institution may charge a $20 sustained overdraft fee on March 8.

iii. *Alternative approach.* For a consumer who does not opt into the institution's overdraft service for ATM and one-time debit card transactions, an institution may also comply with the fee prohibition in § 205.17(b)(1) by not assessing daily or sustained overdraft, negative balance, or similar fees or charges unless a consumer's negative balance is attributable solely to check, ACH or other types of transactions not subject to the fee prohibition while that negative balance remains outstanding. In such case, the institution would not have to determine how to allocate subsequent deposits that reduce but do not eliminate the negative balance. For example, if a consumer has a negative balance of $30, of which $10 is attributable to a one-time debit card transaction, an institution complies with the fee prohibition if it does not assess a sustained overdraft fee while that negative balance remains outstanding.

* * * * *

Paragraph 17(b)(3)—Same Account Terms, Conditions, and Features

* * * * *

2. *Limited-feature bank accounts.* Section 205.17(b)(3) does not prohibit institutions from offering deposit account products with limited features, provided that a consumer is not required to open such an account because the consumer did not opt in. For example, § 205.17(b)(3) does not prohibit an institution from offering a checking account designed to comply with state basic banking laws, or designed for consumers who are not eligible for a checking account because of their credit or checking account history, which may include features limiting the payment of overdrafts. However, a consumer who applies, and is otherwise eligible, for a full-service or other particular deposit account

product may not be provided instead with the account with more limited features because the consumer has declined to opt in.

* * * * *

Paragraph 17(c) Timing

* * * * *

2. *Permitted fees or charges.* Fees or charges for ATM and one-time debit card overdrafts may be assessed only for overdrafts paid on or after the date the financial institution receives the consumer's affirmative consent to the institution's overdraft service. *See also* comment 17(b)–7.

Paragraph 17(d) Content and Format

* * * * *

3. *Opt-in methods.* The opt-in notice must include the methods by which the consumer may consent to the overdraft service for ATM and one-time debit card transactions. Institutions may tailor Model Form A–9 to the methods offered to consumers for affirmatively consenting to the service. For example, an institution need not provide the tear-off portion of Model Form A–9 if it is only permitting consumers to opt-in telephonically or electronically. Institutions may, but are not required, to provide a signature line or check box where the consumer can indicate that he or she declines to opt in.

4. *Identification of consumer's account.* An institution may use any reasonable method to identify the account for which the consumer submits the opt-in notice. For example, the institution may include a line for a printed name and an account number, as shown in Model Form A–9. Or, the institution may print a bar code or use other tracking information. *See also* comment 17(b)–6, which describes how an institution obtains a consumer's affirmative consent.

5. *Alternative plans for covering overdrafts.* If the institution offers both a line of credit subject to the Board's Regulation Z (12 CFR part 226) and a service that transfers funds from another account of the consumer held at the institution to cover overdrafts, the institution must state in its opt-in notice that both alternative plans are offered. For example, the notice might state "We also offer *overdraft protection plans,* such as a link to a savings account or to an overdraft line of credit, which may be less expensive than our standard overdraft practices." If the institution offers one, but not the other, it must state in its opt-in notice the alternative plan that it offers. If the institution does not offer either plan, it should omit the reference to the alternative plans.

By order of the Board of Governors of the Federal Reserve System, May 27, 2010.

Jennifer J. Johnson,

Secretary of the Board.

[FR Doc. 2010–13280 Filed 6–3–10; 8:45 am]

BILLING CODE 6210–01–P

FEDERAL RESERVE SYSTEM

12 CFR Part 230

[Regulation DD; Docket No. R–1315]

Truth in Savings

AGENCY: Board of Governors of the Federal Reserve System.

ACTION: Final rule.

SUMMARY: On January 29, 2009, the Board published final rules amending Regulation DD, which implements the Truth in Savings Act, and the official staff commentary to the regulation. The final rule addressed depository institutions' disclosure practices related to overdraft services, including balances disclosed to consumers through automated systems. The Board is amending Regulation DD and the official staff commentary to address the application of the rule to retail sweep programs and the terminology for overdraft fee disclosures, and to make amendments that conform to the Board's final Regulation E amendments addressing overdraft services, adopted in November 2009.

DATES: The final rule is effective July 6, 2010, except for § 230.11(a)(1)(i), which is effective October 1, 2010.

FOR FURTHER INFORMATION CONTACT: Dana E. Miller or Vivian W. Wong, Senior Attorneys, or Ky Tran-Trong, Counsel, Division of Consumer and Community Affairs, at (202) 452–3667 or (202) 452–2412, Board of Governors of the Federal Reserve System, 20th and C Streets, NW., Washington, DC 20551. For users of Telecommunications Device for the Deaf (TDD) only, contact (202) 263–4869.

SUPPLEMENTARY INFORMATION:

I. Background

In December 2008, the Board adopted a final rule amending Regulation DD, which implements the Truth in Savings Act, and the official staff commentary to the regulation. The final rule addressed depository institutions' disclosure practices related to overdraft services, including balances disclosed to consumers through automated systems. The rule was published in the **Federal Register** on January 29, 2009 and became effective January 1, 2010. *See* 74 FR 5584 (Regulation DD final rule).[1]

In November 2009, the Board adopted a final rule under Regulation E, which implements the Electronic Fund Transfer Act, limiting a financial institution's ability to assess fees for paying ATM and one-time debit card transactions pursuant to the institution's discretionary overdraft service without the consumer's affirmative consent to such payment. The rule was published in the **Federal Register** on November 17, 2009 and has a mandatory compliance date of July 1, 2010. *See* 74 FR 59033 (Regulation E final rule).

Since publication of the two rules, institutions and others have requested clarification of particular aspects of the rule and further guidance regarding compliance with the rule. In addition, conforming amendments to the Regulation DD final rule are necessary in light of certain provisions subsequently adopted in the Regulation E final rule. Accordingly, the Board proposed to amend Regulation DD and the official staff commentary. 75 FR 9126 (March 1, 2010).

The Board received twelve comments on the proposed rule, including from financial institutions and their trade associations, as well as from a consortium of consumer groups. The final rule adopts the proposed rule substantially as proposed, with certain clarifications. Similarly, elsewhere in today's **Federal Register**, the Board is amending certain aspects of the Regulation E final rule.

II. Statutory Authority

The Truth in Savings Act, 12 U.S.C. 4301 *et seq.*, is implemented by the Board's Regulation DD (12 CFR part 230). The purpose of the act and regulation is to assist consumers in comparing deposit accounts offered by depository institutions, principally through the disclosure of fees, the annual percentage yield, the interest rate, and other account terms. An official staff commentary interprets the requirements of Regulation DD (12 CFR part 230 (Supp. I)). Credit unions are governed by a substantially similar regulation issued by the National Credit Union Administration. In the **SUPPLEMENTARY INFORMATION** to the Regulation DD final rule, the Board described its statutory authority and applied that authority to the requirements of the rule. For purposes of this rulemaking, the Board continues to rely on that legal authority and analysis.

[1] The Board published a technical amendment in April 2009 correcting a printing error with respect to Sample Form B–10. Depository institutions must use Sample Form B–10, or a substantially similar form, including the box and gridlines, to provide totals for overdraft fees and returned item fees for the statement cycle and year-to-date. 74 FR 17768 (April 17, 2009). *See* § 230.11(a).

III. Section-by-Section Analysis

A. Section 230.6(a)—Periodic Statement Disclosures; General Rule

Section 230.6(a) describes disclosures that are required to be made when periodic statements are provided, including certain fees or charges. The Board proposed two technical amendments to § 230.6(a) and the related staff commentary. First, the Board proposed to add a new § 230.6(a)(5) to explicitly state that the aggregate fee disclosures required by § 230.11(a)(1), discussed below, are among the disclosures that are required to be provided on periodic statements for purposes of § 230.6(a). Second, the Board proposed to revise comment 6(a)(3)–2, to eliminate the reference to the promotion of the payment of overdrafts because the Regulation DD final rule extended the aggregate fee disclosure to all institutions. The Board did not receive comment on the proposed amendments, which are adopted substantially as proposed. Section 230.6(a)(5) has been revised from the proposal to indicate that the aggregate fee disclosure is required on periodic statements "if applicable," because § 230.11(a) does not require aggregate fee disclosures when a consumer has not incurred any overdraft fees for the calendar year-to-date.

B. Section 230.11(a)—Disclosure of Total Fees on Periodic Statements

Section 230.11(a)(1)(i) requires institutions to disclose on each periodic statement, as applicable, the total dollar amount of all fees or charges imposed on the account for paying checks or other items when there are insufficient or unavailable funds and the account becomes overdrawn for the month and calendar year-to-date. Sample Form B–10 displays this total as "Total Overdraft Fees." Section 230.11(a)(1)(ii) requires institutions to disclose separately the total dollar amount of all fees or charges imposed on the account for returning items unpaid for the month and calendar year-to-date. 12 CFR 230.11(a)(1)(ii). Comment 230.11(a)(1)–3 states that institutions may use terminology such as "returned item fee" or "NSF fee" to describe fees for returning items unpaid. These fee totals must be disclosed in a tabular format substantially similar to Sample Form B–10. 12 CFR 230.11(a)(3).

Some institutions may use terms other than "Overdraft Fee" to describe per-item overdraft fees in their account agreements. Comment 3(a)–2 to Regulation DD provides that institutions must use consistent terminology in their account-opening disclosures, periodic statements, and other disclosures. In light of this comment, questions have been raised as to whether institutions may use terminology other than "Total Overdraft Fees" in the periodic statement aggregate fee disclosure to describe the total amount of all fees or charges imposed on the account for paying overdrafts.

The Board proposed to revise § 230.11(a)(1)(i) to clarify that the periodic statement aggregate fee disclosure must state the total dollar amount for all fees or charges imposed on the account for paying overdrafts, using the term "Total Overdraft Fees." Proposed comment 11(a)(1)–2 explained that this provision supersedes comment 3(a)–2. Consumer group commenters supported the proposed requirement. In particular, these commenters suggested that the use of the terms "NSF Fee" and "Overdraft Fee" interchangeably has led to confusion for consumers. Several industry commenters objected to the proposed terminology requirement, stating that customers are used to seeing certain terms used to describe overdraft fees, such as "NSF Items Paid."[2] Other commenters stated that the Board should permit alternative terminology, such as "Total Overdraft Fees for Paid Items." The Board is adopting the revisions generally as proposed, with minor revisions for clarity.

Section 230.11(a)(1)(i) requires institutions to provide a fee total that includes *all* overdraft fees, including any additional daily or sustained overdraft, negative balance, or similar fees or charges imposed by the institution. *See* comment 11(a)(1)–2. Thus, the use of terminology other than "Total Overdraft Fees" may not capture the various fees associated with an overdraft service. Moreover, the purpose of the aggregate fee disclosure is to provide consumers who use overdraft services with additional information about fees to help them better understand the costs associated with the service. Permitting the use of terminology other than "Total Overdraft Fees" could be confusing to consumers and potentially undermines their ability to compare costs, particularly if a consumer has accounts at different institutions that each use different terminology. The Board does not believe the alternative terminology suggested by commenters furthers consumer understanding.

C. Section 230.11(c)—Disclosure of Account Balances

Comment 11(c)–2—Retail Sweep Programs

Section 230.11(c) of the Regulation DD final rule addresses the disclosure of account balance information to a consumer through an automated system. Under § 230.11(c), institutions must disclose a balance that does not include additional amounts that the institution may provide to cover an item when there are insufficient or unavailable funds in the consumer's account, including under a service to transfer funds from another account of the consumer. The Board adopted this provision to ensure that consumers receive accurate information about their account balances and to help avoid consumer confusion as to whether an account has sufficient funds to cover a transaction.

After publication of the Regulation DD final rule, questions were raised about the application of the rule to retail sweep programs. In a retail sweep program, an institution establishes two legally distinct subaccounts, a transaction subaccount and a savings subaccount, which together make up the consumer's account. The institution allocates and transfers funds between the two subaccounts in order to maximize the balance in the savings subaccount while complying with the monthly limitations on transfers out of savings accounts under the Board's Regulation D, 12 CFR 204.2(d)(2). Certain characteristics distinguish retail sweep programs from overdraft services. Therefore, the Board proposed to add a new comment 11(c)–2 to clarify that, when disclosing a transaction account balance, § 230.11(c) does not require an institution to exclude from the consumer's balance funds that may be transferred from another account pursuant to a retail sweep program. Commenters supported this clarification, but stated that the comment should also permit institutions to include in the disclosed balance funds in investment products linked to transaction accounts pursuant to investment sweep programs. The comment is adopted substantially as proposed.

Retail sweep programs are distinguishable in several respects from overdraft protection plans that transfer funds from a consumer's linked accounts. In particular, retail sweep programs are generally not established for the purpose of covering overdrafts.

[2] The official staff commentary to Regulation DD provides that institutions should not use the generic term "insufficient funds fee" or "NSF fee" to describe both fees for paying overdrafts and fees for returning items unpaid. See, *e.g.*, comment 6(a)(3)–2.iv (institutions may group itemized fees, but may not group together fees for paying overdrafts and fees for returning checks or other items unpaid).

Rather, institutions typically establish retail sweep programs by agreement with the consumer, in order for the institution to minimize its transaction account reserve requirements and, in some cases, to provide a higher interest rate than the consumer would earn on a transaction account alone. Furthermore, most retail sweep programs are structured so that the consumer (or person acting on behalf of the consumer) cannot independently access the funds in the savings subaccount; all transfers out of, and deposits or transfers into, the savings subaccount component of a retail sweep program are effected through the transaction subaccount. Notwithstanding the establishment of two legally distinct subaccounts under a retail sweep program, the periodic statements that consumers receive show a single consumer account balance, and a single account on which all transactions into and out of the account are reflected.

By contrast, linked accounts can be used and funded independently of one another. For example, a consumer can directly make deposits into, and withdrawals from, a savings account whether or not it is linked to a checking account. The link between accounts under an overdraft protection program is primarily established for purposes of providing funds from the savings account in the event that the consumer has insufficient funds in the checking account. Additionally, while retail sweep programs typically do not impose fees on transfers between the savings subaccount and the transaction subaccount, institutions typically charge fees for transfers from linked accounts to cover an overdraft.

Based on the foregoing, the Board believes that consumers under a retail sweep program may reasonably expect to see a single balance combining the funds in the transaction subaccount and the savings subaccount when they request an account balance. Consumers could be confused if a balance that only includes funds in the transaction subaccount were provided because, in some cases, the balance in the transaction subaccount could be zero (to the extent funds had been transferred to the savings subaccount at the time of the balance inquiry). Thus, the final comment clarifies that § 230.11(c) does not require an institution to exclude from the consumer's balance funds that may be transferred from another account pursuant to a retail sweep program.

Some industry commenters stated that the Board should also permit institutions to include in the disclosed balance funds in investment products linked to transaction accounts pursuant to investment sweep programs. In an investment sweep program, a consumer links a transaction account at a depository institution with an investment product at a broker-dealer, investment institution, or the depository institution. The transaction account and the linked investment product are generally established contemporaneously. Investment sweep programs are normally not established for the purpose of covering overdrafts. Rather, deposits and other credits to the transaction account are swept on a regular basis to the investment product to provide the consumer a potentially higher rate of return, while providing consumers access to the funds through the transaction account. Fees are typically not charged for the transfers. For these reasons, the Board believes that investment sweep programs with these characteristics are also distinguishable from overdraft protection plans that transfer funds from a consumer's linked accounts, and the balances in the linked investment product could be included in the balance disclosed under § 230.11(c).

Comment 11(c)–3—Additional Balance

Section 230.11(c) of the Regulation DD final rule permitted institutions to disclose an additional balance including overdraft funds, so long as the institution prominently states that the balance contains additional overdraft funds. Comment 11(c)–2 of the final rule provided guidance on how institutions could appropriately identify the additional funds. However, the comment only addressed opt-outs. The Board subsequently adopted the November 2009 Regulation E final rule, which requires institutions to obtain a consumer's affirmative consent, or opt-in, to the institution's overdraft service, before charging any fees for paying ATM and one-time debit card transactions. In light of the final Regulation E opt-in requirement, the Board proposed to amend comment 11(c)–2, redesignated as comment 11(c)–3, to include references to the opt-in requirement. References to opt-outs were retained in some instances because some institutions may provide an opt-out choice with respect to checks, ACH, and other types of transactions not subject to the Regulation E final rule restrictions.

The Board also proposed to extend the requirement to indicate, when applicable, that funds in the additional balance may not be available for all transactions. For example, if a consumer has an overdraft line of credit, but under the terms of the agreement with the institution, the consumer cannot access the line of credit when using a debit card at a point-of-sale transaction, the proposed comment should state that any additional balance displayed through an automated system should indicate that the overdraft funds are not available for all transactions.

The Board did not receive comment on the proposed comment, which is adopted substantially as proposed with non-substantive revisions.[3]

D. Effective Date

Because some depository institutions may be using terminology other than "Total Overdraft Fees" in their aggregate fee disclosure under § 230.11(a)(1), the Board proposed to make the proposed revisions to § 230.11(a)(1)(i) effective approximately 90 days after publication of the final rule in the **Federal Register**. The Board solicited comment on whether this would be an appropriate time period for implementation. Consumer group commenters stated that this time frame would be reasonable, but that the Board should not extend the effective date further. Two industry trade associates urged the Board to provide an implementation time of six to nine months because institutions" resources are currently devoted to coming into compliance with the Regulation E final rule.

Section 302 of the Riegle Community Improvement Development and Regulatory Improvement Act of 1994, 12 U.S.C. 4802, requires regulations that impose additional disclosure requirements to take effect on the first day of a calendar quarter beginning on or after the date on which the regulations are published in final form, unless the agency determines, for good cause published with the regulation, that the regulation should become effective before such time. The Board believes that an approximately 90-day effective date is appropriate because final § 230.11(a)(1)(i) will require some institutions to modify the disclosures provided to consumers. An effective date of July 1, 2010, which is the first calendar quarter following publication of this final rule, would not provide sufficient time for compliance. Thus, § 230.11(a)(1)(i) is effective October 1, 2010, which is the first day of the subsequent calendar quarter. The remaining provisions of the final rule are effective July 6, 2010.

IV. Regulatory Analysis

Sections VI and VII of the **SUPPLEMENTARY INFORMATION** to the

[3] Due to the clarifications finalized by the Board today, comment 11(c)–3 of the Regulation DD final rule has been redesignated as comment 11(c)–4.

Regulation DD final rule set forth the Board's analyses under the Regulatory Flexibility Act (5 U.S.C. 601 *et seq.*) and the Paperwork Reduction Act of 1995 (44 U.S.C. 3506; 5 CFR part 1320 Appendix A.1). *See* 74 FR 5591–5593. Because the final amendments are clarifications and do not alter the substance of the analyses and determinations accompanying the Regulation DD final rule, the Board continues to rely on those analyses and determinations for purposes of this rulemaking.

List of Subjects in 12 CFR Part 230

Advertising, Banks, Banking, Consumer protection, Reporting and recordkeeping requirements, Truth in savings.

Authority and Issuance

■ For the reasons set forth above, the Board amends 12 CFR part 230 and the Official Staff Commentary, as set forth below:

PART 230—TRUTH IN SAVINGS (REGULATION DD)

■ 1. The authority citation for part 230 continues to read as follows:

Authority: 12 U.S.C. 4301 *et seq.*

■ 2. Section 230.6 is amended by adding paragraph (a)(5) to read as follows:

§ 230.6 Periodic statement disclosures.

(a) * * *

(5) *Aggregate fee disclosure.* If applicable, the total overdraft and returned item fees required to be disclosed by § 230.11(a).

* * * * *

■ 3. Section 230.11 is amended by revising paragraph (a)(1)(i) to read as follows:

§ 230.11 Additional disclosure requirements for overdraft services.

(a) * * * (1) * * *

(i) The total dollar amount for all fees or charges imposed on the account for paying checks or other items when there are insufficient or unavailable funds and the account becomes overdrawn, using the term "Total Overdraft Fees"; and

* * * * *

■ 4. In Supplement I to part 230,

■ a. In Section 230.6(a)(3), the first two sentences of paragraph 2. are revised.

■ b. In Section 230.11(a)(1), paragraph 2. is revised.

■ c. In Section 230.11(c), paragraphs 2. and 3. are redesignated as paragraphs 3. and 4. respectively.

■ d. In Section 230.11(c), new paragraph 2. is added.

■ e. In Section 230.11(c), newly designated paragraph 3. is revised.

Supplement I to Part 230—Official Staff Interpretations

* * * * *

Section 230.6 Periodic Statement Disclosures

(a) *General Rule*

(a)(3) Fees Imposed

* * * * *

2. *Itemizing fees by type.* In itemizing fees imposed more than once in the period, institutions may group fees if they are the same type. (See § 230.11(a)(1) of this part regarding certain fees that are required to be grouped.) * * *

* * * * *

Section 230.11 Additional Disclosures Regarding the Payment of Overdrafts

(a) Disclosure of total fees on periodic statements

(a)(1) General

* * * * *

2. *Fees for paying overdrafts.* Institutions must disclose on periodic statements a total dollar amount for all fees or charges imposed on the account for paying overdrafts. The institution must disclose separate totals for the statement period and for the calendar year-to-date. The total dollar amount for each of these periods includes per-item fees as well as interest charges, daily or other periodic fees, or fees charged for maintaining an account in overdraft status, whether the overdraft is by check, debit card transaction, or by any other transaction type. It also includes fees charged when there are insufficient funds because previously deposited funds are subject to a hold or are uncollected. It does not include fees for transferring funds from another account of the consumer to avoid an overdraft, or fees charged under a service subject to the Board's Regulation Z (12 CFR part 226). *See also* comment 11(c)–2. Under § 230.11(a)(1)(i), the disclosure must describe the total dollar amount for all fees or charges imposed on the account for the statement period and calendar year-to-date for paying overdrafts using the term "Total Overdraft Fees." This requirement applies notwithstanding comment 3(a)–2.

* * * * *

(c) Disclosure of account balances

* * * * *

2. *Retail sweep programs.* In a retail sweep program, an institution establishes two legally distinct subaccounts, a transaction subaccount and a savings subaccount, which together make up the consumer's account. The institution allocates and transfers funds between the two subaccounts in order to maximize the balance in the savings account while complying with the monthly limitations on transfers out of savings accounts under the Board's Regulation D, 12 CFR 204.2(d)(2). Retail sweep programs are generally not established for the purpose of covering overdrafts. Rather, institutions typically establish retail sweep programs by agreement with the consumer, in order for the institution to minimize its transaction account reserve requirements and, in some cases, to provide a higher interest rate than the consumer would earn on a transaction account alone. Section 230.11(c) does not require an institution to exclude from the consumer's balance funds that may be transferred from another account pursuant to a retail sweep program that is established for such purposes and that has the following characteristics:

i. The account involved complies with the Board's Regulation D, 12 CFR 204.2(d)(2),

ii. The consumer does not have direct access to the non-transaction subaccount that is part of the retail sweep program, and

iii. The consumer's periodic statements show the account balance as the combined balance in the subaccounts.

3. *Additional balance.* The institution may disclose additional balances supplemented by funds that may be provided by the institution to cover an overdraft, whether pursuant to a discretionary overdraft service, a service subject to the Board's Regulation Z (12 CFR part 226), or a service that transfers funds from another account held individually or jointly by the consumer, so long as the institution prominently states that any additional balance includes these additional overdraft amounts. The institution may not simply state, for instance, that the second balance is the consumer's "available balance," or contains "available funds." Rather, the institution should provide enough information to convey that the second balance includes these amounts. For example, the institution may state that the balance includes "overdraft funds." Where a consumer has not opted into, or as applicable, has opted out of the institution's discretionary overdraft service, any additional balance disclosed should not include funds that otherwise might be available under that service. Where a consumer has not opted into, or as applicable, has opted out of, the institution's discretionary overdraft service for some, but not all transactions (*e.g.*, the consumer has not opted into overdraft services for ATM and one-time debit card transactions), an institution that includes these additional overdraft funds in the second balance should convey that the overdraft funds are not available for all transactions. For example, the institution could state that overdraft funds are not available for ATM and one-time (or everyday) debit card transactions. Similarly, if funds are not available for all transactions pursuant to a service subject to the Board's Regulation Z (12 CFR part 226) or a service that transfers funds from another account, a second balance that includes such funds should also indicate this fact.

* * * * *

By order of the Board of Governors of the Federal Reserve System, May 27, 2010.

Jennifer J. Johnson,

Secretary of the Board.

[FR Doc. 2010–13281 Filed 6–3–10; 8:45 am]

BILLING CODE 6210–01–P

DEPARTMENT OF TRANSPORTATION

Federal Aviation Administration

14 CFR Part 71

[Docket No. FAA–2009–1152; Airspace Docket No. 09–ASW–31]

Amendment of Class E Airspace; Austin, TX

AGENCY: Federal Aviation Administration (FAA), DOT.

ACTION: Final rule.

SUMMARY: This action amends Class E airspace for the Austin, TX area. Additional controlled airspace is necessary to accommodate new Standard Instrument Approach Procedures (SIAPs) at Austin Executive Airport, Austin, TX. The FAA is taking this action to enhance the safety and management of Instrument Flight Rule (IFR) operations at the airport.

DATES: Effective date 0901 UTC, September 23, 2010. The Director of the Federal Register approves this incorporation by reference action under 1 CFR Part 51, subject to the annual revision of FAA Order 7400.9 and publication of conforming amendments.

FOR FURTHER INFORMATION CONTACT: Scott Enander, Central Service Center, Operations Support Group, Federal Aviation Administration, Southwest Region, 2601 Meacham Blvd., Fort Worth, TX 76137; telephone (817) 321–7716.

SUPPLEMENTARY INFORMATION:

History

On March 29, 2010, the FAA published in the **Federal Register** a notice of proposed rulemaking to amend Class E airspace for the Austin, TX area, reconfiguring controlled airspace at Austin Executive Airport (75 FR 15360) Docket No. FAA–2009–1152. Interested parties were invited to participate in this rulemaking effort by submitting written comments on the proposal to the FAA. No comments were received. Class E airspace designations are published in paragraph 6005 of FAA Order 7400.9T signed August 27, 2009, and effective September 15, 2009, which is incorporated by reference in 14 CFR Part 71.1. The Class E airspace designations listed in this document will be published subsequently in the Order.

The Rule

This action amends Title 14 Code of Federal Regulations (14 CFR) Part 71 by amending Class E airspace for the Austin, TX area. The addition of new SIAPs at Austin Executive Airport, Austin, TX has made this action is necessary for the safety and management of IFR operations at the airport.

The FAA has determined that this regulation only involves an established body of technical regulations for which frequent and routine amendments are necessary to keep them operationally current. Therefore, this regulation: (1) Is not a "significant regulatory action" under Executive Order 12866; (2) is not a "significant rule" under DOT Regulatory Policies and Procedures (44 FR 11034; February 26, 1979); and (3) does not warrant preparation of a regulatory evaluation as the anticipated impact is so minimal. Since this is a routine matter that will only affect air traffic procedures and air navigation, it is certified that this rule, when promulgated, will not have a significant economic impact on a substantial number of small entities under the criteria of the Regulatory Flexibility Act.

The FAA's authority to issue rules regarding aviation safety is found in Title 49 of the U.S. Code. Subtitle 1, Section 106, describes the authority of the FAA Administrator. Subtitle VII, Aviation Programs, describes in more detail the scope of the agency's authority. This rulemaking is promulgated under the authority described in Subtitle VII, Part A, Subpart I, Section 40103. Under that section, the FAA is charged with prescribing regulations to assign the use of airspace necessary to ensure the safety of aircraft and the efficient use of airspace. This regulation is within the scope of that authority as it amends controlled airspace at Austin Executive Airport, Austin, TX.

List of Subjects in 14 CFR Part 71

Airspace, Incorporation by reference, Navigation (air).

Adoption of the Amendment

■ In consideration of the foregoing, the Federal Aviation Administration amends 14 CFR Part 71 as follows:

PART 71—DESIGNATION OF CLASS A, B, C, D, AND E AIRSPACE AREAS; AIR TRAFFIC SERVICE ROUTES; AND REPORTING POINTS

■ 1. The authority citation for 14 CFR Part 71 continues to read as follows:

Authority: 49 U.S.C. 106(g), 40103, 40113, 40120; E.O. 10854, 24 FR 9565, 3 CFR, 1959–1963 Comp., p. 389.

§ 71.1 [Amended]

■ 2. The incorporation by reference in 14 CFR Part 71.1 of the Federal Aviation Administration Order 7400.9T, Airspace Designations and Reporting Points, signed August 27, 2009, and effective September 15, 2009 is amended as follows:

* * * * *

Paragraph 6005 Class E airspace areas extending upward from 700 feet or more above the surface.

* * * * *

ASW TX E5 Austin, TX [Amended]

Point of Origin
(Lat. 30°17′55″ N., long. 97°42′06″ W.)
Austin, Lakeway Airpark, TX
(Lat. 30°21′27″ N., long. 97°59′40″ W.)
Austin, Austin Executive Airport, TX
(Lat. 30°23′51″ N., long. 97°33′59″ W.)
Lago Vista, Lago Vista–Rusty Allen Airport, TX
(Lat. 30°29′55″ N., long. 97°58′10″ W.)

That airspace extending upward from 700 feet above the surface within a 14-mile radius of the Point of Origin, and within a 6.4-mile radius of Lakeway Airpark, and within a 6.4-mile radius of Lago Vista–Rusty Allen Airport, and within a 6.5-mile radius of Austin Executive Airport, and within 2 miles each side of the 132° bearing from Austin Executive Airport extending from the 6.5-mile radius to 10.4 miles southeast of the airport, and within 2 miles each side of the 311° bearing from Austin Executive Airport extending from the 6.5-mile radius to 11.2 miles northwest of the airport.

Issued in Fort Worth, Texas, on May 21, 2010.

Roger M. Trevino,

Acting Manager, Operations Support Group, ATO Central Service Center.

[FR Doc. 2010–13261 Filed 6–3–10; 8:45 am]

BILLING CODE 4910–13–P

DEPARTMENT OF TRANSPORTATION

Federal Aviation Administration

14 CFR Part 71

[Docket No. FAA–2010–0089; Airspace Docket No. 10–ASW–1]

Amendment of Class E Airspace; Corpus Christi, TX

AGENCY: Federal Aviation Administration (FAA), DOT.

ACTION: Final rule.

SUMMARY: This action amends Class E airspace for the Corpus Christi, TX area. Additional controlled airspace is necessary to accommodate new Standard Instrument Approach Procedures (SIAPs) at Aransas County Airport, Rockport, TX. The FAA is taking this action to enhance the safety and management of Instrument Flight Rule (IFR) operations at the airport.

DATES: Effective date 0901 UTC, September 23, 2010. The Director of the

Federal Register approves this incorporation by reference action under 1 CFR Part 51, subject to the annual revision of FAA Order 7400.9 and publication of conforming amendments.

FOR FURTHER INFORMATION CONTACT: Scott Enander, Central Service Center, Operations Support Group, Federal Aviation Administration, Southwest Region, 2601 Meacham Blvd., Fort Worth, TX 76137; telephone (817) 321–7716.

SUPPLEMENTARY INFORMATION:

History

On March 22, 2010, the FAA published in the **Federal Register** a notice of proposed rulemaking to amend Class E airspace for the Corpus Christi, TX area, reconfiguring controlled airspace at Aransas County Airport (75 FR 13453) Docket No. FAA–2010–0089. Interested parties were invited to participate in this rulemaking effort by submitting written comments on the proposal to the FAA. No comments were received. Class E airspace designations are published in paragraph 6005 of FAA Order 7400.9T signed August 27, 2009, and effective September 15, 2009, which is incorporated by reference in 14 CFR Part 71.1. The Class E airspace designations listed in this document will be published subsequently in the Order.

The Rule

This action amends Title 14 Code of Federal Regulations (14 CFR) Part 71 by amending Class E airspace for the Corpus Christi, TX area. The addition of new SIAPs at Aransas County Airport, Rockford, TX has made this action is necessary for the safety and management of IFR operations at the airport.

The FAA has determined that this regulation only involves an established body of technical regulations for which frequent and routine amendments are necessary to keep them operationally current. Therefore, this regulation: (1) Is not a "significant regulatory action" under Executive Order 12866; (2) is not a "significant rule" under DOT Regulatory Policies and Procedures (44 FR 11034; February 26, 1979); and (3) does not warrant preparation of a regulatory evaluation as the anticipated impact is so minimal. Since this is a routine matter that will only affect air traffic procedures and air navigation, it is certified that this rule, when promulgated, will not have a significant economic impact on a substantial number of small entities under the criteria of the Regulatory Flexibility Act.

The FAA's authority to issue rules regarding aviation safety is found in Title 49 of the U.S. Code. Subtitle 1, Section 106, describes the authority of the FAA Administrator. Subtitle VII, Aviation Programs, describes in more detail the scope of the agency's authority. This rulemaking is promulgated under the authority described in Subtitle VII, Part A, Subpart I, Section 40103. Under that section, the FAA is charged with prescribing regulations to assign the use of airspace necessary to ensure the safety of aircraft and the efficient use of airspace. This regulation is within the scope of that authority as it amends controlled airspace at Aransas County Airport, Rockport, TX.

List of Subjects in 14 CFR Part 71

Airspace, Incorporation by reference, Navigation (air).

Adoption of the Amendment

■ In consideration of the foregoing, the Federal Aviation Administration amends 14 CFR Part 71 as follows:

PART 71—DESIGNATION OF CLASS A, B, C, D, AND E AIRSPACE AREAS; AIR TRAFFIC SERVICE ROUTES; AND REPORTING POINTS

■ 1. The authority citation for 14 CFR Part 71 continues to read as follows:

Authority: 49 U.S.C. 106(g), 40103, 40113, 40120; E. O. 10854, 24 FR 9565, 3 CFR, 1959–1963 Comp., p. 389.

§ 71.1 [Amended]

■ 2. The incorporation by reference in 14 CFR Part 71.1 of the Federal Aviation Administration Order 7400.9T, Airspace Designations and Reporting Points, signed August 27, 2009, and effective September 15, 2009 is amended as follows:

* * * * *

Paragraph 6005 Class E airspace areas extending upward from 700 feet or more above the surface.

* * * * *

ASW TX E5 Corpus Christi, TX [Amended]

Corpus Christi International Airport, TX
(Lat. 27°46′13″ N., long. 97°30′04″ W.)
Corpus Christi NAS/Truax Field, TX
(Lat. 27°41′34″ N., long. 97°17′25″ W.)
Port Aransas, Mustang Beach Airport, TX
(Lat. 27°48′43″ N., long. 97°05′20″ W.)
Rockport, San Jose Island Airport, TX
(Lat. 27°56′40″ N., long. 96°59′06″ W.)
Rockport, Aransas County Airport, TX
(Lat. 28°05′12″ N., long. 97°02′41″ W.)
Ingleside, T.P. McCampbell Airport, TX
(Lat. 27°54′47″ N., long. 97°12′41″ W.)
Robstown, Nueces County Airport, TX
(Lat. 27°46′43″ N., long. 97°41′26″ W.)
Corpus Christi VORTAC, TX
(Lat. 27°54′14″ N., long. 97°26′42″ W.)

That airspace extending upward from 700 feet above the surface within a 7.5 mile radius of Corpus Christi International Airport and within 1.4 miles each side of the 200° radial of the Corpus Christi VORTAC extending from the 7.5 mile radius to 8.5 miles north of the airport, and within 1.5 miles each side of the 316° bearing from the airport extending from the 7.5 mile radius to 10.1 miles northwest of the airport, and within an 8.8-mile radius of Corpus Christi NAS/Truax Field, and within a 6.3-mile radius of Mustang Beach Airport, and within a 6.4-mile radius of T.P. McCampbell Airport, and within a 6.3-mile radius of Nueces County Airport, and within a 7.6-mile radius of Aransas County Airport, and within 2 miles each side of the 010° bearing from the Aransas County Airport extending from the 7.6 mile radius to 9.9 miles north of the airport, and within a 6.5-mile radius of San Jose Island Airport, and within 8 miles west and 4 miles east of the 327° bearing from the San Jose Island Airport extending from the airport to 20 miles northwest of the airport, and within 8 miles east and 4 miles west of the 147° bearing from the airport extending from the airport to 16 miles southeast of the airport, excluding that portion more than 12 miles from and parallel to the shoreline.

Issued in Fort Worth, Texas, on May 21, 2010.

Roger M. Trevino,

Acting Manager, Operations Support Group, ATO Central Service Center.

[FR Doc. 2010–13262 Filed 6–3–10; 8:45 am]

BILLING CODE 4910–13–P

DEPARTMENT OF COMMERCE

Bureau of Industry and Security

15 CFR Parts 734, 740, 744, 748, 750, 766 and 774

[Docket No. 0907271167–91198–01]

RIN 0694–AE69

Export Administration Regulations: Technical Corrections

AGENCY: Bureau of Industry and Security, Commerce.

ACTION: Final Rule.

SUMMARY: This rule clarifies language concerning the *de minimis* provisions of the Export Administration Regulations and certain performance criteria of turning machines. It also removes obsolete cross references, removes and reserves two regulatory provisions, corrects a typographical error, and removes an unnecessary reporting requirement.

DATES: This rule is effective June 4, 2010.

FOR FURTHER INFORMATION CONTACT: William H. Arvin, Regulatory Policy Division, e-mail *warvin@bis.doc.gov,* telephone 202 482 2440.

SUPPLEMENTARY INFORMATION:

Background

Removal of Potentially Confusing Language Regarding De Minimis Content of Foreign Made Items

The Export Administration Regulations (EAR) generally do not apply to items that were made and are located outside the United States, and that contain only the "*de minimis*" level of U.S. origin content as defined in § 734.4. The procedures and standards for calculating whether an item exceeds the *de minimis* threshold are contained in Supplement No. 2 to Part 734 of the EAR. Section 732.2(d), which directs readers to that supplement, notes that "[t]his step [*de minimis* calculation] is appropriate only for items that are made outside the United States and are not currently in the United States." Pursuant to § 734.3(a)(1), all items, regardless of level of foreign content, are subject to the EAR if they are physically located in the United States. This rule removes § 734.3(b)(4), which delineates a category of items not subject to the EAR ("foreign made items that have less than the *de minimis* percentage of controlled U.S. content based on the principles described in § 734.3 of this part"), because the provision could be erroneously read as applying the *de minimis* exclusion to foreign made items that are located in the United States. BIS attempted to remove § 734.3(b)(4) in a previous rule. (*See* 73 FR 75942, December 15, 2008). However, the drafting instruction in that rule erroneously read, "In § 734.4, remove paragraph (b)(4)." (*Id.*) Because § 734.4 does not contain a paragraph (b)(4), that instruction had no effect. This rule includes the correct drafting instruction to remove § 734.3(b)(4).

Correction of Incorrect Paragraph Designation

This rule redesignates § 740.11(d)(3)(C) of the EAR as § 740.11(d)(3)(iii), to conform to standard Code of Federal Regulations paragraph structure. The incorrect designation was created in a rule published at 75 FR 6301, February 9, 2010.

Transition to Web-Based System for Information About the Status of Certain Matters Pending With BIS

Since the mid-1980s, BIS has operated a telephone-based automated system for parties to obtain information on the status of license applications and certain other matters that are under review by BIS. This system is known as the "System for Tracking Export License Applications" or "STELA." In 2008, BIS began offering the same automated service via a Web site (*https://snapr.bis.doc.gov/stela/*). BIS plans to phase out the telephone version of STELA because it now has few users, and maintaining such an old system is increasingly difficult. Accordingly, this rule updates references to STELA in §§ 740.5(d)(2), 740.7(d)(4)(ii) and 740.18(c)(5) to the Web address, removes references to the telephone system from all three provisions, and removes the telephone number currently listed in § 740.18(c)(5). This rule also removes and reserves § 750.5, which provided detailed instructions on how to use the telephone version of STELA, as well as references to § 750.5 from §§ 740.5(d)(2) and 740.7(d)(4)(ii).

Removal of Obsolete Provision Regarding Restrictions on Exports and Reexports Involving Persons Named in General Orders

From June 2006 until September 2008, Supplement No. 1 to part 736 of the EAR contained "General Order Number 3," which imposed license requirements on exports and reexports of items subject to the EAR to certain listed persons. That general order was subsequently removed, and most of the persons listed therein were added to the Entity List in Supplement No. 4 to part 744 (73 FR 54503, Sept. 22, 2008). This rule removes and reserves § 744.15, which covered restrictions on exports and reexports involving persons named in general orders. With the removal of General Order Number 3, no such general orders exist; hence, § 744.15 no longer serves a purpose. This rule also removes the sentence in § 744.1(a)(1) that referred to § 744.15.

Removal of Reference to Telephonic Notification Regarding Personal Identification Numbers (PIN)

In § 748.7(a)(2)(i), this rule removes the word "telephonically" from the sentence describing BIS's notification to individual users of the electronic filing system of their PINs because BIS now uses a variety of methods for providing such notifications.

Removal of Cross References to EAR paragraph That No Longer Exists

The rule replaces references to § 748.2(c) of the EAR, which formerly contained BIS address information but no longer exists, with references to a current provision that contains appropriate current address information. Specifically, this rule replaces the reference to § 748.2(c) that appears in §§ 748.7(a)(1), 748.7(a)(2)(iv)(A) and 748.9(i)(1) with a reference to § 748.1(d)(2), which provides BIS's general mailing address. The rule also replaces the reference to § 748.2(c) in § 748.13(c)(2) with the full address of the specific BIS office currently handling the relevant documentation.

Removal of Unnecessary Notification Requirement

Under certain circumstances, BIS may request a delivery verification of items licensed for export. Such verifications are conducted by the government of the importing country. Generally, BIS would require, as a license condition, that the exporter obtain the foreign government-issued certificate of delivery verification and send the certificate to BIS. Amended § 748.13(b) provides that if the national security export control is removed from the item that is the subject of a license that is issued, the requirement to obtain the delivery verification is removed as well. Prior to publication of this rule, § 748.13(b) required the licensee to inform BIS in writing that it would not obtain the delivery verification certificate in situations where the national security license requirement had been removed. Because the national security license requirements referred to are those imposed by the EAR, BIS would be aware of their removal regardless, and therefore would not need written notice from the licensee on this subject.

Replacement of Obsolete Terminology

This rule replaces the term "Export Management System Guidelines" that appears in Supplement No.1 to Part 766 with the term "Export Management Compliance Program Guidelines," and replaces the term "EMS Guidelines" with "EMCP Guidelines" to reflect the terminology that BIS currently uses to describe its compliance guidance.

Clarifying Language Regarding Certain Machine Tools Subject to Nuclear Proliferation Export Controls

Export Control Classification Number (ECCN) 2B001 applies, *inter alia,* to numerically controlled machine tools for turning that have both a positioning accuracy better than 6 μm along any linear axis, and two or more axes that can be controlled simultaneously for contouring control. Consistent with the Nuclear Suppliers Group's guidelines, the EAR's ECCN entry reflects the fact that the United States does not apply nuclear proliferation export license

requirements and licensing policy to machines meeting those parameters if the machine is not capable of machining diameters exceeding 35 mm. Prior to publication of this rule, ECCN 2B001 stated that the nuclear proliferation reason for control (NP) does not apply to "turning machines under 2B001.a with a capacity equal to or less than 35 mm diameter." BIS believes that this language was consistent with the meaning of the term "capacity" that is widely used in the machine tool industry, i.e., indicating a limit or a maximum amount with no extension of this capability. In addition, because the difficulty of maintaining a given positioning accuracy increases as the maximum diameter that the tool is capable of machining increases, it would make sense for BIS to apply a more stringent control to machines capable of maintaining the 6 μm positioning accuracy when machining larger parts than it would apply to machines that were capable of maintaining that level of accuracy only when machining smaller parts. Nevertheless, some parties have indicated that they find the language set forth in ECCN 2B001 confusing. Therefore, BIS is revising the entry to state that the NP reason for control does not apply to "turning machines under 2B001.a with a capacity no greater than 35 mm diameter."

Correcting a Typographical Error Regarding Calculating the "Adjusted Peak Performance" of Digital Computers

The EAR employ a concept called "adjusted peak performance" (APP) for setting performance benchmarks that determine the classification of a digital computer on the Commerce Control List (CCL). A note entitled "Technical Note on 'Adjusted Peak Performance' ('APP')" at the end of Category 4 on the CCL explains how to calculate APP. BIS's intent is that this note match the note of the same name that appears at the end of Category 4 of the List of Dual-Use Goods and Technology published by the Wassenaar Arrangement on Export Controls for Conventional Arms and Dual Use Goods and Technologies (WA list note). However, prior to the publication of this rule, in describing how APP is expressed, the CCL's Category 4 note erroneously used the number "10_{12}" instead of the correct number, "10^{12}," that appears in the WA List note. This rule corrects that error.

Rulemaking Requirements

1. This rule is not a significant rule for purposes of Executive Order 12866.

2. Notwithstanding any other provision of law, no person is required to respond to, nor shall any person be subject to a penalty for failure to comply with a collection of information, subject to the requirements of the Paperwork Reduction Act, unless that collection of information displays a currently valid Office of Management and Budget Control Number. This rule involves a collection of information that has been approved by the OMB under control number 0694–0088, which carries a burden hour estimate of 58 minutes to prepare and submit form BIS–748. Miscellaneous and recordkeeping activities account for 12 minutes per submission. BIS believes that this rule will make no change to the number of submissions or to the burden imposed by this collection.

3. This rule does not contain policies with Federalism implications as that term is defined in Executive Order 13132.

4. BIS finds that there is good cause under 5 U.S.C. 553(b)(3)(B) to waive the provisions of the Administrative Procedure Act requiring prior notice and the opportunity for public comment because these revisions are administrative in nature and do not affect the rights and obligations of the public; therefore allowing prior notice and comment on these rules is unnecessary. In addition, the 30-day delay in effectiveness required by 5 U.S.C. 553(d) is not applicable here because this rule is not a substantive rule, but merely makes technical changes to the regulations. No other law requires that notice of proposed rulemaking and an opportunity for public comment be given for this rule; therefore, the analytical requirements of the Regulatory Flexibility Act (5 U.S.C. 601 *et seq.*) are not applicable.

List of Subjects

15 CFR Part 734

Administrative practice and procedure, Exports, Inventions and patents, Research.

15 CFR Parts 740, 748 and 750

Administrative practice and procedure, Exports, Reporting and recordkeeping requirements.

15 CFR Part 744

Exports, Reporting and recordkeeping requirements, Terrorism.

15 CFR Part 766

Administrative practice and procedure, Confidential business information, Exports, Law enforcement, Penalties.

15 CFR Part 774

Exports, Reporting and recordkeeping requirements.

■ Accordingly, the Export Administration Regulations (15 CFR Parts 730–774) are amended as follows:

PART 734—[AMENDED]

■ 1. The authority citation for part 734 continues to read as follows:

Authority: 50 U.S.C. app. 2401 *et seq.;* 50 U.S.C. 1701 *et seq.;* E.O. 12938, 59 FR 59099, 3 CFR, 1994 Comp., p. 950; E.O. 13020, 61 FR 54079, 3 CFR, 1996 Comp., p. 219; E.O. 13026, 61 FR 58767, 3 CFR, 1996 Comp., p. 228; E.O. 13222, 66 FR 44025, 3 CFR, 2001 Comp., p. 783; Notice of August 13, 2009, 74 FR 41325 (August 14, 2009); Notice of November 6, 2009, 74 FR 58187 (November 10, 2009).

§ 734.3 [Amended]

■ 2. Section 734.3 is amended by removing paragraph (b)(4).

PART 740—[AMENDED]

■ 3. The authority citation for part 740 continues to read as follows:

Authority: 50 U.S.C. app. 2401 *et seq.;* 50 U.S.C. 1701 *et seq.;* 22 U.S.C. 7201 *et seq.;* E.O. 13026, 61 FR 58767, 3 CFR, 1996 Comp., p. 228; E.O. 13222, 66 FR 44025, 3 CFR, 2001 Comp., p. 783; Notice of August 13, 2009, 74 FR 41325 (August 14, 2009).

■ 4. Section 740.5 is amended by revising paragraph (d)(2) to read as follows:

§ 740.5 Civil end-users (CIV).

* * * * *

(d) * * *

(2) *Confirmation of eligibility.* You may not use License Exception CIV for a deemed export until you have obtained confirmation of eligibility by checking the System for Tracking Export License Applications (*https://snapr.bis.doc.gov/stela*) or through the Simplified Network Application Procedure (*https://snapr.bis.doc.gov*).

* * * * *

■ 5. Section 740.7 is amended by revising paragraph (d)(4)(ii) to read as follows:

§ 740.7 Computers (APP).

* * * * *

(d) * * *

(4) * * *

(ii) *Confirmation of eligibility.* You may not use License Exception APP, until you have obtained confirmation of eligibility via either BIS's System for Tracking Export License Applications (STELA) (*https://snapr.bis.doc.gov/stela*) from BIS's Simplified Network Application Procedure (SNAP). See

http://www.bis.doc.gov/SNAP/index.htm for more information about SNAP.

* * * * *

§ 740.11 [Amended]

■ 6. Section 740.11 is amended by redesignating paragraph (d)(3)(C) as paragraph (d)(3)(iii).

■ 7. Section 740.18 is amended by revising paragraph (c)(5) to read as follows:

§ 740.18 Agricultural commodities (AGR).

* * * * *

(c) * * *

(5) *Status of pending AGR notification requests.* You must contact BIS's System for Tracking Export License Applications (STELA) (*https://snapr.bis.doc.gov/stela*) for status of your pending AGR notification or verify the status in BIS's Simplified Network Applications Processing Redesign (SNAP–R) System. STELA will provide the date of registration of the AGR notification. If no department or agency objection is raised within 11 business days, STELA will, on the twelfth business day following the date of registration, provide you with confirmation of that fact. You may not proceed with your shipment unless you confirm with either STELA or SNAP–R that no objection has been raised. If an objection is raised, STELA and SNAP–R will indicate that a license is required. The AGR notification will then be processed as a license application. In addition, BIS may provide notice of an objection by telephone, fax, courier service, or other means.

* * * * *

PART 744—[AMENDED]

■ 8. The authority citation for part 744 continues to read as follows:

Authority: 50 U.S.C. app. 2401 *et seq.;* 50 U.S.C. 1701 *et seq.;* 22 U.S.C. 3201 *et seq.;* 42 U.S.C. 2139a; 22 U.S.C. 7201 *et seq.;* 22 U.S.C. 7210; E.O. 12058, 43 FR 20947, 3 CFR, 1978 Comp., p. 179; E.O. 12851, 58 FR 33181, 3 CFR, 1993 Comp., p. 608; E.O. 12938, 59 FR 59099, 3 CFR, 1994 Comp., p. 950; E.O. 12947, 60 FR 5079, 3 CFR, 1995 Comp., p. 356; E.O. 13026, 61 FR 58767, 3 CFR, 1996 Comp., p. 228; E.O. 13099, 63 FR 45167, 3 CFR, 1998 Comp., p. 208; E.O. 13222, 66 FR 44025, 3 CFR, 2001 Comp., p. 783; E.O. 13224, 66 FR 49079, 3 CFR, 2001 Comp., p. 786; Notice of August 13, 2009, 74 FR 41325 (August 14, 2009); Notice of November 6, 2009, 74 FR 58187 (November 10, 2009).

§ 744.1 [Amended]

■ 9. Section 744.1 is amended by removing the fourteenth sentence from paragraph (a)(1).

§ 744.15 [Removed]

■ 10. Section 744.15 is removed and reserved.

PART 748—[AMENDED]

■ 11. The authority citation for part 748 continues to read as follows:

Authority: 50 U.S.C. app. 2401 *et seq.;* 50 U.S.C. 1701 *et seq.;* E.O. 13026, 61 FR 58767, 3 CFR, 1996 Comp., p. 228; E.O. 13222, 66 FR 44025, 3 CFR, 2001 Comp., p. 783; Notice of August 13, 2009, 74 FR 41325 (August 14, 2009).

■ 12. Section 748.7 is amended by revising the second sentence of paragraph (a)(1), the second sentence of paragraph (a)(2)(i) and the second sentence of paragraph (a)(2)(iv)(A) to read as follows:

§ 748.7 Applying electronically for a license or classification request.

(a) * * *

(1) * * * Written requests may be faxed to (202) 219–9179 or (202) 219–9182 (Washington, DC), faxed to (949) 660–9347 (Newport Beach, CA), or submitted to the address identified in § 748.1(d)(2) of this part. Both the envelope and letter must be marked "*Attn:* Electronic Submission Request." * * *

(2) * * *

(i) * * * Each person approved by BIS to submit applications electronically for the company will be assigned a personal identification number ("PIN") by BIS. * * *

* * * * *

(iv) * * *

(A) * * * You must confirm this notification in writing within two business days to BIS at the address provided in § 748.1(d)(2) of this part.

* * * * *

■ 13. Section 748.9 is amended by revising paragraph (i)(1) to read as follows:

§ 748.9 Support documents for license applications.

* * * * *

(i) * * *

(1) The applicant must send a letter request for return of an Import or End-User Certificate to the address stated in § 748.1(d)(2) of this part, "Attn: Import/End-User Certificate Request".

* * * * *

■ 14. Section 748.13 is amended by revising paragraph (b) and the last sentence of paragraph (c)(2) to read as follows:

§ 748.13 Delivery verification (DV).

* * * * *

(b) *Exception to obtaining Delivery Verification.* The DV requirement for a particular transaction does not apply if the item is no longer controlled for national security reasons following the issuance of a license.

(c) * * *

(2) * * * Once all shipments against the license have been made (or the licensee has determined that none will be), the licensee must forward, in one package, all applicable DVs to Office of Exporter Services, Export Management and Compliance Division, Room 2705, U.S. Department of Commerce, 14th Street and Pennsylvania Avenue, NW., Washington, DC 20230.

* * * * *

PART 750—[AMENDED]

■ 15. The authority citation for part 750 continues to read as follows:

Authority: 50 U.S.C. app. 2401 *et seq.;* 50 U.S.C. 1701 *et seq.;* Sec 1503, Pub. L. 108–11, 117 Stat. 559; E.O. 13026, 61 FR 58767, 3 CFR, 1996 Comp., p. 228; E.O. 13222, 66 FR 44025, 3 CFR, 2001 Comp., p. 783; Presidential Determination 2003–23 of May 7, 2003, 68 FR 26459, May 16, 2003; Notice of August 13, 2009, 74 FR 41325 (August 14, 2009).

§ 750.5 [Removed]

■ 16. Section 750.5 is removed and reserved.

PART 766—[AMENDED]

■ 17. The authority citation for part 766 continues to read as follows:

Authority: 50 U.S.C. app. 2401 *et seq.;* 50 U.S.C. 1701 *et seq.;* E.O. 13222, 66 FR 44025, 3 CFR, 2001 Comp., p. 783; Notice of August 13, 2009, 74 FR 41325 (August 14, 2009).

■ 18. Supplement No. 1 to Part 766 is amended by revising the second and third sentences of paragraph number "2" that appears under the unnumbered italicized header "Mitigating Factors" that appears under the header "III How BIS Determines What Sanctions Are Appropriate in a Settlement" to read as follows:

Supplement No. 1 to Part 766—Guidance on Charging and Penalty Determinations in Settlement of Administrative Enforcement Cases

* * * * *

III. How BIS Determines What Sanctions Are Appropriate in a Settlement

* * * * *

Mitigating Factors

* * * * *

(2) * * * In determining the presence of this factor, BIS will take account of the extent to which a party complies with the principles set forth in BIS's Export Management Compliance Program (EMCP) Guidelines. Information about the EMCP Guidelines can

be accessed through the BIS Web site at *www.bis.doc.gov.*

* * * * *

PART 774—[AMENDED]

■ 19. The authority citation for part 774 continues to read as follows:

Authority: 50 U.S.C. app. 2401 *et seq.;* 50 U.S.C. 1701 *et seq.;* 10 U.S.C. 7420; 10 U.S.C. 7430(e); 22 U.S.C. 287c, 22 U.S.C. 3201 *et seq.,* 22 U.S.C. 6004; 30 U.S.C. 185(s), 185(u); 42 U.S.C. 2139a; 42 U.S.C. 6212; 43 U.S.C. 1354; 46 U.S.C. app. 466c; 50 U.S.C. app. 5; 22 U.S.C. 7201 *et seq.;* 22 U.S.C. 7210; E.O. 13026, 61 FR 58767, 3 CFR, 1996 Comp., p. 228; E.O. 13222, 66 FR 44025, 3 CFR, 2001 Comp., p. 783; Notice of August 13, 2009 (74 Fed. Reg. 41,325 (August 14, 2009)).

■ 20. In Supplement No. 1 to part 774, Category 2, Export Control Classification Number 2B001, revise the "Controls" paragraph of the "License Requirements" section to read as follows:

Supplement No. 1 to Part 774—The Commerce Control List

* * * * *

2B001 Machine tools and any combination thereof, for removing (or cutting) metals, ceramics or "composites", which, according to the manufacturer's technical specifications, can be equipped with electronic devices for "numerical control"; and specially designed components as follows (see List of Items Controlled).

License Requirements

Reason for Control: NS, NP, AT

Control(s)	Country chart
NS applies to entire entry	NS Column 1.
NP applies to 2B001.a, .b, .c, and .d, EXCEPT: (1) turning machines under 2B001.a with a capacity no greater than 35 mm diameter; (2) bar machines (Swissturn), limited to machining only bar feed through, if maximum bar diameter is equal to or less than 42 mm and there is no capability of mounting chucks. (Machines may have drilling and/or milling capabilities for machining parts with diameters less than 42 mm); or (3) milling machines under 2B001.b.with x-axis travel greater than two meters and overall "positioning accuracy" on the x-axis more (worse) than 0.030 mm..	NP Column 1.
AT applies to entire entry	AT Column 1.

* * * * *

■ 21. In Supplement No. 1 to part 774, Category 4, the Technical Note on "Adjusted Peak Performance" ("APP") that appears at the end of Category 4, revise the definition of "APP" that appears under the heading "Abbreviations Used in This Technical Note" to read as follows:

Supplement No. 1 to Part 774—The Commerce Control List

* * * * *

Category 4—Computers

* * * * *

Technical Note on "Adjusted Peak Performance" ("APP")

* * * * *

Abbreviations Used in This Technical Note

* * * * *

APP is expressed in Weighted TeraFLOPS (WT) in units of 10^{12} adjusted floating point operations per second.

* * * * *

Dated: May 24, 2010.

Kevin J. Wolf,

Assistant Secretary for Export Administration.

[FR Doc. 2010–13243 Filed 6–3–10; 8:45 am]

BILLING CODE 3510–33–P

FEDERAL TRADE COMMISSION

16 CFR Part 320

RIN 3084-AA99

Disclosures for Non-Federally Insured Depository Institutions Under the Federal Deposit Insurance Corporation Improvement Act (FDICIA)

AGENCY: Federal Trade Commission (FTC or Commission).

ACTION: Final rule.

SUMMARY: The Federal Deposit Insurance Corporation Improvement Act of 1991 (FDICIA) directs the Commission to prescribe the manner and content of certain mandatory disclosures for depository institutions that lack federal deposit insurance. On March 13, 2009, the Commission published a supplemental notice of proposed rulemaking seeking comment on disclosure rules for such institutions. After reviewing comments received in response, the Commission now publishes a final rule.

DATES: This final rule will become effective on July 6, 2010.

ADDRESSES: Copies of this document are available from: Public Reference Branch, Room 130, Federal Trade Commission, 600 Pennsylvania Avenue, NW, Washington, DC 20580. The complete record of this proceeding is also available at that address. Relevant portions of the proceeding, including this document, are available at (*http://www.ftc.gov*).

FOR FURTHER INFORMATION CONTACT: Hampton Newsome, (202) 326-2889, Attorney, Division of Enforcement, Bureau of Consumer Protection, Federal Trade Commission, 600 Pennsylvania Avenue, NW, Washington, DC 20580.

SUPPLEMENTARY INFORMATION:

I. Introduction

In 1991, as part of the Federal Deposit Insurance Corporation Improvement Act (FDICIA), Congress directed the Commission to prescribe certain disclosures for depository institutions lacking federal deposit insurance. Congress then prohibited the FTC from spending resources on FDICIA's disclosure requirements until 2003. After Congress lifted that ban, the Commission published proposed disclosures consistent with FDICIA's statutory directives (70 FR 12823 (March 16, 2005)). Many commenters raised concerns with the proposal.[1] Thereafter, Congress passed the Financial Services Regulatory Relief Act of 2006 (FSRRA) (Pub. L. 109-351) amending FDICIA. The FSRRA amendments addressed almost all of the concerns raised by commenters about the FTC's proposed rule. The Commission published a supplemental notice on March 13, 2009 (74 FR 10843) seeking comments on a proposal consistent with the FSRRA amendments. The Commission has reviewed the comments received in response and now publishes a final rule.

II. Background

Under existing law, all federally chartered and most state-chartered depository institutions must have federal deposit insurance. Federal deposit insurance funds currently guarantee all deposits at federally

[1] *See* (*http://www.ftc.gov/os/comments/FDICIA/index.shtm*).

insured institutions up to and including $250,000 per depositor.[2] Federally insured banks and credit unions must display signs disclosing this guarantee at each station or window where insured deposits are normally received in the depository institution's principal place of business and in all its branches.[3]

Although the vast majority of depository institutions have federal deposit insurance, there are some exceptions. For example, the Puerto Rican government provides deposit insurance for non-federal credit unions located in Puerto Rico. In addition, approximately 170 state-chartered credit unions in approximately nine states do not have federal deposit insurance, and seek to protect their customers through private deposit insurance.[4]

In response to incidents affecting the safety of deposits at certain financial institutions lacking federal deposit insurance, Congress amended the Federal Deposit Insurance Act (FDIA) in 1991 by adding Section 43 (12 U.S.C. 1831t), which imposes several requirements on non-federally insured institutions[5] and private deposit insurers.[6] In general, Section 43(b), as amended by FSRRA, mandates that depository institutions lacking federal deposit insurance provide certain disclosures to consumers.[7] Specifically, in all periodic statements, signature cards, passbooks, and share certificates, the institution must disclose that it does not have federal deposit insurance and that, if the institution fails, the federal government does not guarantee that depositors will receive their money back (hereinafter "required long disclosure").[8] Moreover, in most advertising and at deposit windows, principal places of business, and branches, the institution must disclose that it is not federally insured (hereinafter "required short disclosure").[9]

For many years after FDICIA's passage, Congress prohibited the Commission from using FTC resources to enforce the law's requirements. In 2003, Congress lifted this prohibition for certain provisions of FDICIA, including the disclosure provisions of Section 43.[10] Subsequently, the Commission published a Notice of Proposed Rulemaking (NPRM) seeking comments on its proposed implementation of Section 43 (70 FR 12823 (March 16, 2005)). In response, the Commission received numerous comments raising serious concerns with the proposal.[11]

In October 2006, Congress substantially addressed the commenter concerns directly by amending Section 43 as part of FSRRA. These new amendments rendered significant portions of the Commission's proposed Rule obsolete. In particular, the new statutory provisions: (1) significantly altered Section 43(b)(3) (12 U.S.C. 1831t(b)(3)), which requires institutions to obtain signed acknowledgments from depositors related to the lack of federal deposit insurance; (2) established specific exemptions to the advertising disclosure requirements; (3) modified the requirements for disclosures on periodic statements and account records and at depository locations; and (4) limited some of the FTC's authority under the law and provided state regulators with specific enforcement authority.[12]

In response to the FSRRA amendments, the Commission published a supplemental notice of proposed rulemaking which discussed the FSRRA amendments in detail, proposed conforming rule changes in light of the FSRRA amendments, and sought comments on these changes. The Commission has reviewed the comments received in response[13] and, as discussed in detail below, now issues its final rule.

III. Comment Analysis

The comments on the supplemental rule notice raised two substantive issues: 1) disclosure requirements for institutions participating in shared branching networks and service centers; and 2) the timing of signed acknowledgment requirements.

A. Shared Branching Networks and Service Centers

Background: Under FDICIA, non-federally insured institutions must post required disclosures wherever "deposits are normally received."[14] Such locations could include places that are not owned or controlled by the non-federally insured institution. For instance, the Commission indicated in its supplemental notice (74 FR at 10846) that disclosures should appear at credit union service centers (independent facilities that provide services for a group of institutions) to the extent such facilities contain stations where deposits of non-federally insured institutions "are normally received." The statute does not define the term "normally received."

Issue and Comments: In response to the supplemental notice, many commenters raised concerns about whether the disclosure requirements apply to shared branching networks. Shared branching allows participating institutions to accept deposits and provide additional services for members of other institutions in the network. Shared branching arrangements typically involve hundreds of

[2] On October 3, 2008, the enactment of the Emergency Economic Stabilization Act of 2008 (Pub. L. No. 110-343) raised the basic limit on federal deposit insurance coverage from $100,000 to $250,000 per depositor. The Helping Families Save Their Homes Act of 2009 (Pub. L. No. 111-22) extended the $250,000 coverage until December 31, 2013.

[3] *See* 12 CFR Part 328 and 12 CFR Part 740.

[4] A 2003 U.S. Government Accountability Office (GAO) report indicated that eight states had credit unions that purchased private deposit insurance in lieu of federal insurance. An additional nine states allowed private deposit insurance but did not have any privately insured credit unions. All other states required credit unions to have federal deposit insurance. "Federal Deposit Insurance Act: FTC Best Among Candidates to Enforce Consumer Protection Provisions," GAO-03-971 (Aug. 2003), 6-7. The Commission understands that there are a small number of state banks and savings associations that do not have federal deposit insurance.

[5] "Depository institutions" lacking federal insurance include credit unions, banks, and savings associations that are not either: a) insured depository institutions as defined under the FDIA; or b) insured credit unions as defined in Section 101 of the Federal Credit Union Act (FCUA) (12 U.S.C. 1752). The FDIA defines "insured depository institution" as any bank or savings association the deposits of which are insured by the FDIC pursuant to this chapter (12 U.S.C. 1813(c)). The FCUA defines "insured credit union" to mean "any credit union the member accounts of which are insured by the National Credit Union Administration" (12 U.S.C. 1752).

[6] Congress passed these amendments as part of FDICIA. *See* Pub. L. No. 102-242, 105 Stat. 2236 (1991) (Section 151 of FDICIA, Subtitle F of Title 1, S. 543). Section 43 was initially designated as Section 40 of the FDIA. *See also* S. Rep. No. 167, 102 Cong., 1st Sess., at 61 (1992).

[7] The definition of "depository institution" in Section 43(f)(2) includes any entity that, as determined by the FTC, engages in the business of receiving deposits and could reasonably be mistaken for a depository institution by the entity's current or prospective customers (*i.e.*, "look-alike" institutions). The Commission has not identified any "look-alike" institutions to date and is not addressing the issue in this proceeding. If, in the future, the Commission or commenters identify "look-alike" institutions of concern that are not subject to existing legal requirements, the FTC will consider whether to develop requirements for such entities.

[8] 12 U.S.C. 1831t(b).

[9] *Id.*

[10] Making Appropriations for Agriculture, Rural Development, Food and Drug Administration, and Related Agencies, for the Fiscal Year Ending September 30, 2004, and for Other Purposes, H.R. Conf. Rep. No. 108-401, Cong., 1st Sess., at 88 (2003).

[11] The Commission received 162 comments in response to the NPRM. *See* comments at (*http://www.ftc.gov/os/comments/FDICIA/index.shtm*).

[12] The FSRRA amendments did not alter the basic content of the required disclosures. Section 43 continues to require depository institutions lacking federal deposit insurance affirmatively to disclose that fact to their depositors or members. (12 U.S.C. 1831t(b)).

[13] The Commission received 29 comments in response to the supplemental notice. *See* comments at (*http://www.ftc.gov/os/comments/fdiciasupplement/index.shtm*).

[14] 12 U.S.C. 1831t(b)(2).

institutions, both federally and non-federally insured.[15] Three such networks exist nationwide involving approximately 3,700 locations.[16] The vast majority of institutions in these networks have federal deposit insurance.[17]

Many commenters raised concern that the FTC will require federally insured institutions in shared branching networks to post FDICIA disclosures on behalf of each of the non-federally ensured entities in those networks. Both federally and non-federally insured institutions argued that such a requirement would be unreasonable. Federally insured institutions warned that disclosures at their facilities would confuse consumers and may even lead some to believe their institutions lack federal insurance.[18] Non-federally insured institutions argued that such a requirement may limit or prevent their participation in these networks because federally insured institutions may refuse to post such disclosures.[19]

American Share Insurance (ASI), a private insurer for depository institutions, agreed that such disclosures would confuse consumers and also argued that Congress did not intend to require disclosures at such locations.[20] ASI argued that deposit locations at institutions in a shared branching network are analogous to deposits at ATM's (which, in some cases, do allow deposits from other institutions). It then reasoned that, because Congress exempted ATM's from FDICIA's disclosure requirements, participants in shared branching networks should receive similar treatment.[21] ASI also stated that Congress intended FDICIA's requirements to match National Credit Union Administration (NCUA) regulations which require disclosures only at facilities owned or controlled by the regulated institution.[22]

Several other commenters also suggested that the Commission rely on recent disclosure requirements issued by the NCUA for such networks in lieu of imposing a separate disclosure requirement.[23] Recently, NCUA addressed the signage requirements for institutions participating in shared branching networks (74 FR 9347 (March 4, 2009)). For federally insured institutions and facilities operated by a non-credit union entity, the new rules require a general disclosure that not all institutions in the network are federally insured.[24] Commenters argued that the NCUA disclosure provides a clear explanation to consumers and that any FTC disclosure could cause confusion.

Discussion: Under the statute, disclosures must appear at "each station or window where deposits are *normally* received" (emphasis added).[25] By its plain language, the law does not limit such locations to those owned or controlled by the institution. At the same time, the law does not require disclosures at *every* station or window that could conceivably receive a deposit. Instead, the law covers locations that "normally" receive deposits, which the Commission interprets to include locations that operate as the functional equivalent of stations or windows at the institution's own facilities. Whether a location "normally" receives deposits for a non-federally insured institution likely depends on factors such as the volume of deposits, the frequency of deposits, the signage at the receiving institution, and whether the receiving institution is in the same city as the non-federally insured institution.[26]

Service centers present a different issue than shared networks. Specifically, these entities are independent facilities operated on behalf of specific institutions that share costs and ownership.[27] Therefore, it seems likely that these facilities "normally" receive deposits for participating non-federally insured institutions. Accordingly, absent circumstances demonstrating that a particular shared center does not "normally" receive deposits (as discussed above) for a non-federally insured institution, the required disclosures should appear at the service center to ensure the institution complies with FDICIA.

B. Timing for Signed Acknowledgments

Issue: FDICIA requires institutions without federal deposit insurance to obtain signed statements from their depositors acknowledging that the institution does not have federal deposit insurance. The law, however, allows institutions under certain circumstances to provide notices to depositors in lieu of obtaining signed acknowledgments.[28] Specifically, for depositors who joined the institution before October 13, 2006 (*i.e.*, "current" depositors), an institution either must obtain a signed acknowledgement, or make two attempts to obtain such a signed acknowledgement through notices to depositors. Under the statute, institutions must transmit the first of these notices to current depositors not later than three months after October 13, 2006, and the second not less than thirty days, but not more than three months, after the first.

Comment: The Credit Union National Association (CUNA) [29] urged the FTC to change the threshold date from October 13, 2006 to the date the Commission's rule becomes effective. It reasoned that the 2006 date is now impossible to meet.

Discussion: Congress set the October 13, 2006 date and the Commission has no discretion to change it. Importantly, the FSRRA amendments were immediately enforceable upon enactment. Therefore, the date was binding on covered institutions at that time. Complaints about retroactive application of the law, therefore, are misplaced. If an institution has not already sent notices to persons who were depositors as of October 13, 2006 pursuant to the statute, the law requires it to obtain a signed acknowledgment from that depositor before accepting a

[15] For a general discussion of shared branching networks, *see* comments from American Share Insurance (# 540033-00003).

[16] *Id.*

[17] *Id.*

[18] *See, e.g.,* Honda Federal Credit Union (# 540033-00004); International Harvester Employee Credit Union (# 540033-00028).

[19] *See, e.g.,* AurGroup Financial Credit Union (# 540033-00011), Christian Community Credit Union (# 540033-00015); Cincinnati Central Credit Union (# 540033-00025); Firefighters Community Credit Union (# 540033-00009).

[20] ASI (# 540033-00003).

[21] *See* 12 U.S.C. 1831t(b)(2)(A).

[22] *Id.* The NCUA regulations for federally insured institutions require posting "at each station or window where insured account funds or deposits are normally received *in* its principal place of business and in all its branches . . . ." *See* 12 C.F.R. 740.4(c) (emphasis added). In comparison, FDICIA states that the disclosure should appear "at each station or window where deposits are normally received, its principal place of business and all its branches where it accepts deposits or opens accounts (excluding automated teller machines or point of sale terminals), and on its main Internet page." *See* 12 U.S.C. 1831t(b)(2)(a).

[23] 74 FR 9347 (March 4, 2009) (NCUA regulations). *See, e.g.,* Atlantic Regional Federal Credit Union (# 540033-00030); Coast Hills Federal Credit Union (# 540033-00013); Mazuma Credit Union (# 540033-00027); and ASI (# 540033-00003).

[24] NCUA's disclosure reads: "This credit union participates in a shared branch network with other credit unions and accepts share deposits for members of those other credit unions. While this credit union is federally insured, not all of these other credit unions are federally insured. If you need information on the insurance status of your credit union, please contact your credit union directly." 12 C.F.R. 740.4(c)(1).

[25] 12 U.S.C. 1831t(b)(2)(a).

[26] The record does not identify, nor is the Commission aware of, any federally insured institutions in a shared branching network that constitute locations where the deposits of non-federally insured institutions are "normally" received.

[27] *See* ASI (# 540033-00003).

[28] The acknowledgments and notices must indicate that the institution is not federally insured and that the federal government does not guarantee that depositors will recover their money if the institution fails. *See* 12 U.S.C. 1831t(b)(2).

[29] CUNA (# 540033-00022).

deposit. The Commission cannot alter this mandate.

Finally, in issuing the FSRRA amendments, the Commission notes that Congress used the term "current depositor" to cover depositors obtained on or before October 13, 2006. As that date becomes more remote, the term "current depositor" may cause confusion because some may incorrectly assume the term applies to depositors obtained more recently than 2006. To address this concern, the Commission has changed the title of Section 320.5(c) to "Depositors Obtained On Or Before October 13, 2006" instead of "Current Depositors."

IV. Summary of Final Rule

Generally, the final rule incorporates the language of the statute, in many cases repeating the law's language verbatim. Like the statute, the final rule addresses disclosure requirements for periodic statements and account records, advertising, and locations that receive deposits; signed acknowledgment requirements; and an exception to these requirements for certain depository institutions. The final rule is identical in substance to that published in the supplemental notice.[30] The following summarizes the final rule's basic provisions.

A. Scope of the Final Rule

Section 320.1 of the rule indicates that the FTC's new requirements apply to depository institutions (*e.g.*, banks, savings association, and credit unions) that do not have federal deposit insurance. Consistent with Section 43(f)(3)(B) of the FDIA, a depository institution lacks federal deposit insurance if it is neither an insured depository institution as defined in the FDIA (12 U.S.C. 1813(c)(2)), nor an insured credit union as defined in Section 101 of the FCUA, 12 U.S.C. 1752. Most banks and savings associations must have federal deposit insurance under state or federal law.[31] Accordingly, the rule applies apply to only a small number of state-chartered banks and savings associations.[32]

B. Disclosures in Periodic Statements

Consistent with the statute (12 U.S.C. § 1831t(b)(1)), Section 320.3 requires covered depository institutions to conspicuously disclose in all periodic statements and account records that the institution is not federally insured, and that, if the institution fails, the federal government does not guarantee that depositors will recoup their money. Section 320.3 offers model language that depository institutions may use to satisfy this requirement. The Commission will evaluate whether disclosures are conspicuous according to well-established FTC law.[33]

C. Disclosures in Advertising

Under Section 320.4, covered depository institutions must disclose in advertising consistent with 12 U.S.C. § 1831t(b)(2) that the institution is not federally insured.[34] As dictated by the statute (12 U.S.C. § 1831t(b)(2)(B)), the rule also contains specific exemptions to this advertising disclosure requirement. In particular, the required short disclosure (that the institution is not federally insured) need not appear in a sign, document, or other item that has the institution's name but no information about the institution's products or services or information otherwise promoting the institution. Consistent with the law, the rule also exempts from the disclosure requirement, "[s]mall utilitarian items [*e.g.*, common pens and key chains] that do not mention deposit products or insurance if inclusion of the notice would be impractical."

D. Disclosures at Deposit Locations

Section 320.4 requires covered institutions to clearly and conspicuously disclose that the institution is not federally insured "at each station or window place where deposits are normally received, its principal place of business and all branches where it accepts deposits or opens accounts (excluding automated teller machines or point of sale terminals), and on its main Internet page . . . ." This section tracks the language in 12 U.S.C. 1831t(b)(2)(A).

E. Disclosure Acknowledgment

Sections 320.5 and 320.6 require covered institutions to obtain signed acknowledgments of the fact that the institution is not federally insured from new depositors. The rule language tracks the 12 U.S.C. 1831t(b)(3) requirements. For certain customers (*e.g.*, those obtained through a merger), the rule, consistent with the statute, provides an alternative notice requirement which allows institutions to send notifications attempting to obtain signed acknowledgments no later than 45 days after the merger or conversion to customers in lieu of obtaining signatures.

F. Exception for Certain Depository Institutions

Section 43(d) of the FDIA ("Exceptions for institutions not receiving retail deposits") provides the Commission with discretion to except certain institutions from the disclosure requirements. Specifically, the FDIA allows the Commission to exempt depository institutions that do not receive initial deposits of less than "an amount equal to the standard maximum insurance amount" from individuals who are citizens or residents of the United States.[35] That amount is currently $250,000. The Commission's 2005 proposed rule and the 2009 supplemental notice contained such an exception.[36] The Commission reasoned that customers of institutions that handle only large initial deposits are sufficiently sophisticated that they do not need disclosures. Some commenters supported the proposed exemption while others raised concerns.[37] For example, the Office of the Comptroller of the Currency (OCC) urged the Commission to expand the proposed exception to include uninsured national trust banks and federal and state branches of foreign banks altogether because these institutions do not accept retail deposits.[38] NAFCU, on the other

[30] The final rule contains non-substantive editorial changes in Sections 320.2, 320.3, 320.4(a) & (b), and 320.5(a), (b), & (c).

[31] *See, e.g.*, 12 U.S.C. 222 (national banks); Cal. Fin. Code 5606(a) (California savings associations); and 12 U.S.C. 3104(c)(1) (state and federal branches of foreign banks receiving deposits of less than $100,000).

[32] Consistent with the statute, the rule applies to non-federally insured credit unions in any State, the District of Columbia, the several territories and possessions of the United States, the Panama Canal Zone, and the Commonwealth of Puerto Rico (*see* 12 U.S.C. 1781). The Commission understands that many credit unions in Puerto Rico do not have federal deposit insurance but, instead, operate under a Puerto Rican government-backed deposit insurance system. Section 43 imposes disclosure requirements specifically on institutions that do not have *federal* deposit insurance and does not exempt institutions operating under non-federal insurance systems. Accordingly, Puerto Rico credit unions are subject to the rule's requirements.

[33] *See, e.g.*, *Thompson Medical Co.*, 104 F.T.C. 648, 797-98 (1984); *The Kroger Co.*, 98 F.T.C. 639, 760 (1981).

[34] For the purposes of the rule, advertising includes, but is not limited to, advertising in print, electronic, Internet, or broadcast media.

[35] 12 U.S.C. 1821(a)(1).

[36] *See* 70 FR 12823, 12825 (Mar. 16, 2005) and 74 FR 10843, 10846 (Mar. 13, 2009). The statute indicates that the FTC should not consider "money received in connection with any draft or similar instrument issued to transmit money" to be a deposit for the purposes of this exemption. In 2006, Congress amended the exception language by changing the threshold from "$100,000" to "an amount equal to the standard maximum deposit insurance amount." Public Law 109-173 (Feb. 26, 2006).

[37] The National Association of Federal Credit Unions (NAFCU) (# 515567-00121) and the Greater Cincinnati Credit Union (# 515567-00081) opposed the proposed exception. The Navy Federal Credit Union (# 515567-00083) supported the proposed exception.

[38] OCC (#515567-00201).

hand, opposed the provision arguing that some customers with initial deposits over the standard maximum insurance amount at federal credit unions do not understand how their funds are insured.[39] In its supplemental notice, the Commission continued to propose the exception and sought further comment on the issue. The Commission received none.

The final rule contains the exception. The Commission continues to believe that customers who make large deposits ($250,000 or more) at institutions that refuse initial deposits under $250,000 do not need the FDICIA disclosures because they are sufficiently sophisticated and likely understand the institution's deposit insurance status. The rule also defines "standard maximum insurance amount" to mean the maximum amount of deposit insurance as determined under Section 11(a)(1) of the FDIA (12 U.S.C. 1821(a)(1)).

This exception addresses one of the two issues raised by the OCC. Specifically, the OCC expressed concern about the application of FDICIA disclosure requirements to uninsured national trust banks even though they do not accept deposits. Because these institutions accept no deposits, they by definition do not accept initial deposits of under $250,000, and are therefore, exempt from the rule's requirements. The OCC also expressed concern that the rule would cover federal and state branches of foreign banks. While Congress has already granted these institutions an exemption from federal deposit insurance requirements (12 U.S.C. 3104(c)), FDICIA contains no such exception from its disclosure requirements. Therefore, if such institutions accept initial deposits of less than $250,000, they have to comply with the rule's disclosure requirements.

Finally, the Commission notes that NAFCU raised concerns about persons making large initial deposits at credit unions and not receiving the disclosures. The record did not identify any credit unions serving individuals (*i.e.*, natural persons) that only receive initial deposits of more than $250,000.[40] Any credit unions receiving initial deposits under $250,000 must make the disclosures even if some depositors happen to open accounts with $250,000 or more. Accordingly, the Commission does not expect that the exception will apply to any credit unions.

V. Paperwork Reduction Act

The disclosures and written acknowledgment statements do not constitute a "collection of information" under the Paperwork Reduction Act of 1995 (44 U.S.C. 3501-3520) because they are a "public disclosure of information originally supplied by the government to the recipient for the purpose of disclosure to the public" as indicated in Office of Management and Budget regulations.[41]

VI. Regulatory Flexibility Act

The Regulatory Flexibility Act (RFA), 5 U.S.C. 601-612, requires that the Commission provide an Initial Regulatory Flexibility Analysis (IRFA) with a proposed rule and a Final Regulatory Flexibility Analysis (FRFA), if any, with the final rule, unless the Commission certifies that the rule will not have a significant economic impact on a substantial number of small entities. *See* 5 U.S.C. 603-605. The Commission published an IRFA pursuant to the RFA in its March 16, 2005 proposed rule notice (70 FR 12823).

The Commission does not anticipate that the final rule will have a significant economic impact on a substantial number of small entities. The Commission recognizes that many of the affected depository institutions may qualify as small businesses under the relevant threshold (*i.e.*, assets that do not exceed $150 million) and that the economic impact of the rule on a particular small entity could be significant. Overall, however, the rule likely will not have a significant economic impact on a substantial number of small entities. The Commission staff estimates that these requirements apply to fewer than 400 credit unions, banks, and savings associations. These depository institutions have been required to make the applicable disclosures for more than ten years under Section 43 of the FDIA. In addition, the Commission expects that most covered entities make disclosures about their deposit insurance as a matter of course. The Commission does not expect that the disclosures specified in the rule will have a significant impact on these entities. Accordingly, this document serves as notice to the Small Business Administration of the agency's certification of no effect. Although the Commission certifies under the RFA that the rule in this notice will not have a significant impact on a substantial number of small entities, the Commission has determined, nonetheless, to publish a FRFA to explain the impact of the rule on small entities as follows:

A. Statement of the need for, and objectives of, the amendments

The Federal Trade Commission is charged with enforcing the requirements of 12 U.S.C. 1831t(b) and prescribing the manner and content of disclosures required by the law.

B. Issues raised by comments in response to the Initial Regulatory Flexibility Analysis

Public comments raised various issues about the impacts of the initial proposed rule. However, as detailed in the supplemental notice, the FSRRA amendments addressed these concerns. Section III of this notice discusses in detail the issues raised in response to the supplemental notice.

C. Estimate of the number of small entities to which the amendments will apply

As described above, the rule applies to depository institutions lacking federal deposit insurance, including state-chartered credit unions, banks, and savings associations, many of which may be small entities. According to the GAO, in 2003 there were 212 credit unions in the 50 states that chose to use private deposit insurance instead of federal insurance. The Commission estimates that this number is smaller now. The Commission estimates that, in addition to this number, there are approximately 150 credit unions in Puerto Rico that do not have federal deposit insurance. In addition, the Commission estimates that there are fewer than 20 banks and savings associations that would be covered by the rule. The Commission assumes that few of these depository institutions have assets exceeding $150 million.

D. Projected reporting, recordkeeping, and other compliance requirements

The law requires affected institutions to comply regardless of the existence of an FTC rule. Nevertheless, the Commission recognizes that the law, and thus the FTC rule, involves some costs for affected depository institutions. Most of these costs are in the form of printing costs for account statements, signature cards, and other printed material requiring the disclosures. It is unlikely that

[39] NAFCU (# 515567-00121).

[40] In addition, the record did not identify any credit unions that only receive initial deposits of more than $100,000. Although there are approximately two dozen "corporate" credit unions which serve only other credit unions and may have such initial deposit policies, these institutions already have federal deposit insurance and thus would not fall under the FDICIA disclosure requirements. *See, e.g.*, (*http://www.ncua.gov/DataServices/FindCU.aspx*) (National Credit Union Administration database).

[41] 5 CFR 1320.3(c)(2).

compliance involves any significant costs associated with legal, other professional, or training costs to determine the nature of the disclosure because the rule provides the information required to be disclosed to the public. The Commission does not expect that the disclosure requirements impose significant incremental costs for websites or other advertising. Adding the required disclosure to various materials imposes on the depository institutions some printing costs and perhaps minimal initial design or layout costs. A precise estimate of such costs is difficult to determine without data regarding the required volume of such materials.

E. Alternatives

The amendments closely track the prescriptive requirements of the statute, and thus leave little room for significant alternatives to decrease the burden on regulated entities. In addition, the statutory requirements reflected in this final rule already apply to the affected entities. Accordingly, alternatives such as extending the effective date of the rule would have no effect on burden.

List of Subjects in 16 CFR Part 320

Credit unions, Depository institutions, Federal Deposit Insurance Act, Federal Trade Commission Act, and Federal deposit insurance.

■ For the reasons stated in the preamble, the Federal Trade Commission adds Part 320 to 16 CFR chapter I, subchapter C as set forth below:

PART 320—DISCLOSURE REQUIREMENTS FOR DEPOSITORY INSTITUTIONS LACKING FEDERAL DEPOSIT INSURANCE

320.1 Scope.
320.2 Definitions.
320.3 Disclosures in periodic statements and account records.
320.4 Disclosures in advertising and on the premises.
320.5 Disclosure acknowledgment.
320.6 Exception for certain depository institutions.
320.7 Enforcement.

Authority: 12 U.S.C. 1831t; 15 U.S.C. 41 *et seq*

§ 320.1 Scope.

This part applies to all depository institutions lacking federal deposit insurance. It requires the disclosure of certain insurance-related information in periodic statements, account records, locations where deposits are normally received, and advertising. This part also requires such depository institutions to obtain a written acknowledgment from depositors regarding the institution's lack of federal deposit insurance.

§ 320.2 Definitions.

(a) *Depository institution* means any bank or savings association as defined under 12 U.S.C. 1813, or any credit union organized and operated according to the laws of any State, the District of Columbia, the several territories and possessions of the United States, the Panama Canal Zone, or the Commonwealth of Puerto Rico, which laws provide for the organization of credit unions similar in principle and objectives to federal credit unions.

(b) *Lacking federal deposit insurance* means the depository institution is neither an insured depository institution as defined in 12 U.S.C. 1813(c)(2), nor an insured credit union as defined in Section 101 of the Federal Credit Union Act, 12 U.S.C. 1752.

(c) *Standard maximum deposit insurance amount* means the maximum amount of deposit insurance as determined under Section 11(a)(1) of the Federal Deposit Insurance Act (12 U.S.C. 1821(a)(1)).

§ 320.3 Disclosures in periodic statements and account records.

Depository institutions lacking federal deposit insurance must include a notice disclosing clearly and conspicuously that the institution is not federally insured, and that if the institution fails, the Federal Government does not guarantee that depositors will get back their money, in all periodic statements of account, on each signature card, and on each passbook, certificate of deposit, or share certificate. For example, a notice would comply with the requirement if it conspicuously stated: "[Institution's name] is not federally insured. If it fails, the Federal Government does not guarantee that you will get your money back." The disclosures required by this section must be clear and conspicuous and presented in a simple and easy to understand format, type size, and manner.

§ 320.4 Disclosures in advertising and on the premises.

(a) *Required disclosures.* Each depository institution lacking federal deposit insurance must include a clear and conspicuous notice disclosing that the institution is not federally insured:

(1) At each station or window where deposits are normally received, its principal place of business and all its branches where it accepts deposits or opens accounts (excluding automated teller machines or point of sale terminals), and on its main Internet page; and

(2) In all advertisements except as provided in paragraph (c) of this section.

(b) *Format and type size.* The disclosures required by this section must be clear and conspicuous and presented in a simple and easy to understand format, type size, and manner.

(c) *Exceptions.* The following need not include a notice that the institution is not federally insured:

(1) Any sign, document, or other item that contains the name of the depository institution, its logo, or its contact information, but only if the sign, document, or item does not include any information about the institution's products or services or information otherwise promoting the institution; and

(2) Small utilitarian items that do not mention deposit products or insurance, if inclusion of the notice would be impractical.

§ 320.5 Disclosure acknowledgment.

(a) *New depositors obtained other than through a conversion or merger.* With respect to any depositor who was not a depositor at the depository institution on or before October 13, 2006, and who is not a depositor as described in paragraph (b) of this section, a depository institution lacking federal deposit insurance may receive a deposit for the account of such depositor only if the institution has obtained the depositor's signed written acknowledgement that:

(1) The institution is not federally insured; and

(2) If the institution fails, the Federal Government does not guarantee that the depositor will get back the depositor's money.

(b) *New depositors obtained through a conversion or merger.* With respect to a depositor at a federally insured depository institution that converts to, or merges into, a depository institution lacking federal insurance after October 13, 2006, a depository institution lacking federal deposit insurance may receive a deposit for the account of such depositor only if:

(1) The institution has obtained the depositor's signed written acknowledgement described in paragraph (a) of this section; or

(2) The institution makes an attempt, sent by mail no later than 45 days after the effective date of the conversion or merger, to obtain the acknowledgment. In making such an attempt, the institution must transmit to each depositor who has not signed and returned a written acknowledgement described in paragraph (a) of this section:

(i) A conspicuous card containing the information described in paragraphs (a)(1) and (a)(2) of this section, and a line for the signature of the depositor; and

(ii) Accompanying materials requesting the depositor to sign the card, and return the signed card to the institution.

(c) *Depositors obtained on or before October 13, 2006.* Any depository institution lacking federal deposit insurance may receive any deposit after October 13, 2006, for the account of a depositor who was a depositor on or before that date only if:

(1) The depositor has signed a written acknowledgement described in paragraph (a) of this section; or

(2) The institution has transmitted to the depositor:

(i) A conspicuous card containing the information described in paragraphs (a)(1) and (a)(2) of this section, and a line for the signature of the depositor; and

(ii) Accompanying materials requesting that the depositor sign the card, and return the signed card to the institution.

NOTE TO PARAGRAPH (C): The institution must have made the transmission described in paragraph (c)(2) of this section via mail not later than three months after October 13, 2006. The institution must have made a second identical transmission via mail not less than 30 days, and not more than three months, after the first transmission to the depositor in accordance with paragraph (c)(2) of this section, if the institution has not, by the date of such mailing, received from the depositor a card referred to in paragraph (c)(1) of this section which has been signed by the depositor.

(d) *Format and type size.* The disclosures required by this section must be clear and conspicuous and presented in a simple and easy to understand format, type size, and manner.

§ 320.6 Exception for certain depository institutions.

The requirements of this part do not apply to any depository institution lacking federal deposit insurance and located within the United States that does not receive initial deposits of less than an amount equal to the standard maximum deposit insurance amount from individuals who are citizens or residents of the United States, other than money received in connection with any draft or similar instrument issued to transmit money.

§ 320.7 Enforcement.

Compliance with the requirements of this part shall be enforced under the Federal Trade Commission Act, 15 U.S.C. 41 *et seq.*

By direction of the Commission.

Donald S. Clark

Secretary

[FR Doc. 2010–13085 Filed 6–3–10: 10:48 am]

[Billing Code: 6750–0–1–S]

CONSUMER PRODUCT SAFETY COMMISSION

[CPSC Docket No. CPSC–2009–0064]

16 CFR Part 1215

Third Party Testing for Certain Children's Products; Infant Bath Seats: Requirements for Accreditation of Third Party Conformity

AGENCY: Consumer Product Safety Commission.

ACTION: Notice of Requirements.

SUMMARY: The Consumer Product Safety Commission (CPSC or Commission) is issuing a notice of requirements that provides the criteria and process for Commission acceptance of accreditation of third party conformity assessment bodies for testing pursuant to specific CPSC regulations relating to infant bath seats. The Commission is issuing this notice of requirements pursuant to section 14(a)(3)(B)(vi) of the Consumer Product Safety Act (CPSA) (15 U.S.C. 2063(a)(3)(B)(vi)).

DATES: *Effective Date:* The requirements for accreditation of third party conformity assessment bodies to assess conformity with 16 CFR part 1215 are effective upon publication of this notice in the **Federal Register**.

Comments in response to this notice of requirements should be submitted by July 6, 2010. Comments on this notice should be captioned "Notice of Requirements for Accreditation of Third Party Conformity Assessment Bodies to Assess Conformity with Part 1215 of Title 16, Code of Federal Regulations."

ADDRESSES: You may submit comments, identified by Docket No. CPSC–2009–0064 by any of the following methods:

Electronic Submissions: Submit electronic comments in the following way:

Federal eRulemaking Portal: http://www.regulations.gov. Follow the instructions for submitting comments. To ensure timely processing of comments, the Commission is no longer accepting comments submitted by electronic mail (e-mail) except through *http://www.regulations.gov.*

Written Submissions: Submit written submissions in the following ways:

Mail/Hand delivery/Courier (for paper, disk, or CD–ROM submissions) preferably in five copies, to: Office of the Secretary, Consumer Product Safety Commission, Room 820, 4330 East West Highway, Bethesda, MD 20814; telephone (301) 504–7923.

Instructions: All submissions received must include the agency name and docket number for this notice. All comments received may be posted without change to *http://www.regulations.gov*, including any personal information provided. Do not submit confidential business information, trade secret information, or other sensitive or protected information (such as a Social Security Number) electronically; if furnished at all, such information should be submitted in writing.

Docket: For access to the docket to read background documents or comments received, go to *http://www.regulations.gov.*

FOR FURTHER INFORMATION CONTACT: Robert "Jay" Howell, Assistant Executive Director for Hazard Identification and Reduction, U.S. Consumer Product Safety Commission, 4330 East West Highway, Bethesda, Maryland 20814; e-mail *rhowell@cpsc.gov.*

SUPPLEMENTARY INFORMATION:

I. Introduction

Section 14(a)(3)(B)(vi) of the CPSA, as added by section 102(a)(2) of the Consumer Product Safety Improvement Act of 2008 (CPSIA), Public Law 110–314, directs the CPSC to publish a notice of requirements for accreditation of third party conformity assessment bodies to assess children's products for conformity with "other children's product safety rules." Section 14(f)(1) of the CPSA defines "children's product safety rule" as "a consumer product safety rule under [the CPSA] or similar rule, regulation, standard, or ban under any other Act enforced by the Commission, including a rule declaring a consumer product to be a banned hazardous product or substance." Under section 14(a)(3)(A) of the CPSA, each manufacturer (including the importer) or private labeler of products subject to those regulations must have products that are manufactured more than 90 days after the **Federal Register** publication date of a notice of the requirements for accreditation, tested by a third party conformity assessment body accredited to do so, and must issue a certificate of compliance with the applicable regulations based on that testing. Section 14(a)(2) of the CPSA, as

added by section 102(a)(2) of the CPSIA, requires that certification be based on testing of sufficient samples of the product, or samples that are identical in all material respects to the product. The Commission also emphasizes that, irrespective of certification, the product in question must comply with applicable CPSC requirements (*see, e.g.,* section 14(h) of the CPSA, as added by section 102(b) of the CPSIA).

This notice provides the criteria and process for Commission acceptance of accreditation of third party conformity assessment bodies for testing pursuant to safety standard for infant bath seats which appears elsewhere in this issue of the **Federal Register.** The standard for infant bath seats will be codified at 16 CFR part 1215. The standard contains the testing methods that conformity assessment bodies will use to assess infant bath seats. The Commission is recognizing limited circumstances in which it will accept certifications based on product testing conducted before the infant bath seat standard becomes effective in six months. The details regarding those limited circumstances can be found in part IV of this document below.

Although section 14(a)(3)(B)(vi) of the CPSA directs the CPSC to publish a notice of requirements for accreditation of third party conformity assessment bodies to assess conformity with "all other children's product safety rules," this notice of requirements is limited to the test methods identified immediately above.

The CPSC also recognizes that section 14(a)(3)(B)(vi) of the CPSA is captioned as "All Other Children's Product Safety Rules," but the body of the statutory requirement refers only to "other children's product safety rules." Nevertheless, section 14(a)(3)(B)(vi) of the CPSA could be construed as requiring a notice of requirements for "all" other children's product safety rules, rather than a notice of requirements for "some" or "certain" children's product safety rules. However, whether a particular rule represents a "children's product safety rule" may be subject to interpretation, and the Commission staff is continuing to evaluate which rules, regulations, standards, or bans are "children's product safety rules." The CPSC intends to issue additional notices of requirements for other rules which the Commission determines to be "children's product safety rules."

This notice of requirements applies to all third party conformity assessment bodies as described in section 14(f)(2) of the CPSA. Generally speaking, such third party conformity assessment bodies are: (1) Third party conformity assessment bodies that are not owned, managed, or controlled by a manufacturer or private labeler of a children's product to be tested by the third party conformity assessment body for certification purposes; (2) "firewalled" conformity assessment bodies (those that are owned, managed, or controlled by a manufacturer or private labeler of a children's product to be tested by the third party conformity assessment body for certification purposes and that seek accreditation under the additional statutory criteria for "firewalled" conformity assessment bodies); and (3) third party conformity assessment bodies owned or controlled, in whole or in part, by a government.

The Commission requires baseline accreditation of each category of third party conformity assessment body to the International Organization for Standardization (ISO)/International Electrotechnical Commission (IEC) Standard 17025:2005, "General Requirements for the Competence of Testing and Calibration Laboratories." The accreditation must be by an accreditation body that is a signatory to the International Laboratory Accreditation Cooperation-Mutual Recognition Arrangement (ILAC–MRA), and the scope of the accreditation must include testing for any of the test methods identified earlier in part I of this document for which the third party conformity assessment body seeks to be accredited.

(A description of the history and content of the ILAC–MRA approach and of the requirements of the ISO/IEC 17025:2005 laboratory accreditation standard is provided in the CPSC staff briefing memorandum "Third Party Conformity Assessment Body Accreditation Requirements for Testing Compliance With 16 CFR Part 1501 (Small Parts Regulations)," dated November 2008 and available on the CPSC's Web site at *http://www.cpsc.gov/library/foia/foia09/brief/smallparts.pdf.*)

The Commission has established an electronic accreditation registration and listing system that can be accessed via its Web site at *http://www.cpsc.gov/about/cpsia/labaccred.html.*

The Commission stayed the enforcement of certain provisions of section 14(a) of the CPSA in a notice published in the **Federal Register** on February 9, 2009 (74 FR 6396); the stay applied to testing and certification of various products, including infant bath seats. On December 28, 2009, the Commission published a notice in the **Federal Register** (74 FR 68588) revising the terms of the stay. One section of the December 28, 2009, notice addressed "Consumer Products or Children's Products Where the Commission Is Continuing the Stay of Enforcement Until Further Notice," due to factors such as pending rulemaking proceedings affecting the product or the absence of a notice of requirements. The infant bath seats testing and certification requirements were included in that section of the December 28, 2009, notice. As the factors preventing the stay from being lifted in the December 28, 2009, notice with regard to testing and certifications of infant bath seats were the absence of approved standards and a notice of requirements, publication of this notice along with today's Safety Standard for Infant Bath Seats; Final Rule, have the effect of lifting the stay with regard to these CPSC regulations.

This notice of requirements is effective on June 4, 2010. The final rule announcing the Safety Standard for Infant Bath Seats is effective December 1, 2010. The effect of these twin publications is that each manufacturer (including the importer) or private labeler of a product subject to 16 CFR part 1215 must have any such product manufactured on or after December 2, 2010, tested by a third party conformity assessment body accredited to do so and must issue a certificate of compliance with 16 CFR part 1215 based on that testing.

This notice of requirements is exempt from the notice and comment rulemaking requirements of the Administrative Procedure Act, 5 U.S.C. 553 (*see* section 14(a)(3)(G) of the CPSA, as added by section 102(a)(2) of the CPSIA (15 U.S.C. 2063(a)(3)(G))).

II. Accreditation Requirements

A. Baseline Third Party Conformity Assessment Body Accreditation Requirements

For a third party conformity assessment body to be accredited to test children's products for conformity with the test methods identified earlier in part I of this document, it must be accredited by an ILAC–MRA signatory accrediting body, and the accreditation must be registered with, and accepted by, the Commission. A listing of ILAC–MRA signatory accrediting bodies is available on the Internet at *http://ilac.org/membersbycategory.html.* The accreditation must be to ISO Standard ISO/IEC 17025:2005, "General Requirements for the Competence of Testing and Calibration Laboratories," and the scope of the accreditation must expressly include testing to the test method for infant bath seats included in 16 CFR part 1215, *Safety Standard for*

Infant Bath Seats. A true copy, in English, of the accreditation and scope documents demonstrating compliance with these requirements must be registered with the Commission electronically. The additional requirements for accreditation of firewalled and governmental conformity assessment bodies are described in parts II.B and II.C of this document below.

The Commission will maintain on its Web site an up-to-date listing of third party conformity assessment bodies whose accreditations it has accepted and the scope of each accreditation. Once the Commission adds a third party conformity assessment body to that list, the third party conformity assessment body may commence testing of infant bath seats to support certification by the manufacturer or private labeler of compliance with the test methods identified earlier in part I of this document.

B. Additional Accreditation Requirements for Firewalled Conformity Assessment Bodies

In addition to the baseline accreditation requirements in part II.A of this document above, firewalled conformity assessment bodies seeking accredited status must submit to the Commission copies, in English, of their training documents showing how employees are trained to notify the Commission immediately and confidentially of any attempt by the manufacturer, private labeler, or other interested party to hide or exert undue influence over the third party conformity assessment body's test results. This additional requirement applies to any third party conformity assessment body in which a manufacturer or private labeler of a children's product to be tested by the third party conformity assessment body owns an interest of ten percent or more. While the Commission is not addressing common parentage of a third party conformity assessment body and a children's product manufacturer at this time, it will be vigilant to see if this issue needs to be addressed in the future.

As required by section 14(f)(2)(D) of the CPSA, the Commission must formally accept, by order, the accreditation application of a third party conformity assessment body before the third party conformity assessment body can become an accredited firewalled conformity assessment body.

C. Additional Accreditation Requirements for Governmental Conformity Assessment Bodies

In addition to the baseline accreditation requirements of part II.A of this document above, the CPSIA permits accreditation of a third party conformity assessment body owned or controlled, in whole or in part, by a government if:

- To the extent practicable, manufacturers or private labelers located in any nation are permitted to choose conformity assessment bodies that are not owned or controlled by the government of that nation;
- The third party conformity assessment body's testing results are not subject to undue influence by any other person, including another governmental entity;
- The third party conformity assessment body is not accorded more favorable treatment than other third party conformity assessment bodies in the same nation who have been accredited;
- The third party conformity assessment body's testing results are accorded no greater weight by other governmental authorities than those of other accredited third party conformity assessment bodies; and
- The third party conformity assessment body does not exercise undue influence over other governmental authorities on matters affecting its operations or on decisions by other governmental authorities controlling distribution of products based on outcomes of the third party conformity assessment body's conformity assessments.

The Commission will accept the accreditation of a governmental third party conformity assessment body if it meets the baseline accreditation requirements of part II.A of this document above and meets the additional conditions stated here. To obtain this assurance, CPSC staff will engage the governmental entities relevant to the accreditation request.

III. How Does a Third Party Conformity Assessment Body Apply for Acceptance of Its Accreditation?

The Commission has established an electronic accreditation acceptance and registration system accessed via the Commission's Internet site at *http://www.cpsc.gov/about/cpsia/labaccred.html.* The applicant provides, in English, basic identifying information concerning its location, the type of accreditation it is seeking, and electronic copies of its ILAC–MRA accreditation certificate and scope statement, and firewalled third party conformity assessment body training document(s), if relevant.

Commission staff will review the submission for accuracy and completeness. In the case of baseline third party conformity assessment bodies and government-owned or government-operated conformity assessment bodies, when that review and any necessary discussions with the applicant are satisfactorily completed, the third party conformity assessment body in question is added to the CPSC's list of accredited third party conformity assessment bodies at *http://www.cpsc.gov/about/cpsia/labaccred.html.* In the case of a firewalled conformity assessment body seeking accredited status, when the staff's review is complete, the staff transmits its recommendation on accreditation to the Commission for consideration. (A third party conformity assessment body that may ultimately seek acceptance as a firewalled third party conformity assessment body also can initially request acceptance as a third party conformity assessment body accredited for testing of children's products other than those of its owners.) If the Commission accepts a staff recommendation to accredit a firewalled conformity assessment body, the firewalled conformity assessment body will then be added to the CPSC's list of accredited third party conformity assessment bodies. In each case, the Commission will notify the third party conformity assessment body electronically of acceptance of its accreditation. All information to support an accreditation acceptance request must be provided in the English language.

Once the Commission adds a third party conformity assessment body to the list, the third party conformity assessment body may then begin testing of children's products to support certification of compliance with the regulations identified earlier in part I of this document for which it has been accredited.

IV. Acceptance of Children's Product Certifications Based on Third Party Conformity Assessment Body Testing to the New Safety Standard for Infant Bath Seats Prior to Their Effective Date

Elsewhere in this issue of the **Federal Register,** the Commission is publishing a new safety standard for infant bath seats, which will be codified at 16 CFR part 1215. The effect of this notice of requirements and the final rule is that each manufacturer (including the importer) or private labeler of a product subject to 16 CFR part 1215 must have

any such product manufactured on or after December 1, 2010 tested by a third party conformity assessment body accredited to do so and must issue a certificate of compliance with 16 CFR part 1215 based on that testing.

To ease the transition to the new standard and avoid a "bottlenecking" of products at conformity assessment bodies at or near the effective date of 16 CFR 1215, the Commission will accept certifications based on testing that occurred prior to the effective date of the new standard in certain prescribed circumstances. However, any such testing must comport with all CPSC requirements, including:

- At the time of product testing, the product was tested by a third party conformity assessment body that was ISO/IEC 17025 accredited by an ILAC–MRA member, and had been accepted by the Commission, at the time of the test.
- The accreditation scope in effect for the third party conformity assessment body at the time of testing expressly included testing to the test method(s) included in 16 CFR part 1215; and
- The test results show compliance with the test methods in the new regulation (16 CFR part 1215).

Dated: May 25, 2010.

Todd A. Stevenson,

Secretary, Consumer Product Safety Commission.

[FR Doc. 2010–13080 Filed 6–3–10; 8:45 am]

BILLING CODE 6355–01–P

CONSUMER PRODUCT SAFETY COMMISSION

16 CFR Part 1215

[CPSC Docket No. CPSC–2009–0064]

Safety Standard for Infant Bath Seats: Final Rule

AGENCY: Consumer Product Safety Commission.

ACTION: Final rule.

SUMMARY: Section 104(b) of the Consumer Product Safety Improvement Act of 2008 ("CPSIA") requires the United States Consumer Product Safety Commission ("Commission," "CPSC," "we") to promulgate consumer product safety standards for durable infant or toddler products. These standards are to be "substantially the same as" applicable voluntary standards or more stringent than the voluntary standard if the Commission concludes that more stringent requirements would further reduce the risk of injury associated with the product. We are issuing a safety standard for infant bath seats in response to the direction under section 104(b) of the CPSIA.

DATES: The rule will become effective on December 6, 2010 and apply to products manufactured or imported on or after that date. The incorporation by reference of the publication listed in this rule is approved by the Director of the Federal Register as of December 6, 2010.

FOR FURTHER INFORMATION CONTACT: Carolyn Manley, Office of Compliance and Field Operations, Consumer Product Safety Commission, 4330 East West Highway, Bethesda, MD 20814; telephone (301) 504–7607; *cmanley@cpsc.gov.*

SUPPLEMENTARY INFORMATION:

A. Background and Statutory Authority

Section 104(b) of the Consumer Product Safety Improvement Act of 2008 ("CPSIA," Public Law 110–314) requires the Commission to promulgate consumer product safety standards for durable infant or toddler products. Section 104 includes infant bath seats among these products. *See* CPSIA, section 104(f). The standards developed under section 104 of the CPSIA are to be "substantially the same as" applicable voluntary standards or more stringent than the voluntary standard if the Commission concludes that more stringent requirements would further reduce the risk of injury associated with the product. Section 104(b)(2) of the CPSIA directs the Commission to begin rulemaking for two standards by August 14, 2009. Under this provision, the Commission published a notice of proposed rulemaking ("NPR") in the **Federal Register** of September 3, 2009 (74 FR 45719) proposing a safety standard for bath seats. The proposed standard was substantially the same as a voluntary standard developed by ASTM International (formerly known as the American Society for Testing and Materials), ASTM F 1967–08a, "Standard Consumer Safety Specification for Infant Bath Seats," with some modifications to strengthen the standard in order to reduce the risk of injury associated with bath seats. The Commission is now issuing a final standard for infant bath seats that is almost the same as the proposed standard it published in September 2009.

B. The Product

Infant bath seats are used in a tub or sink to support a seated infant while he or she is being bathed. They are marketed for use with infants between the age of approximately 5 months (the time at which infants can sit up unassisted) to the age of approximately 10 months (the time at which infants begin pulling themselves up to a standing position). Currently, there are two manufacturers and one importer of bath seats active in the United States (one fewer than at the time the Commission published its proposed rule). All are members of the Juvenile Products Manufacturers Association ("JPMA"), which is the major United States trade association representing juvenile product manufacturers and importers. All produce a variety of children's products in addition to bath seats.

The exact number of bath seats currently sold or in use is not known. Data from a 2005 survey by the American Baby Group (*2006 Baby Products Tracking Study*), in conjunction with Centers for Disease Control ("CDC") birth data, indicated annual sales of bath seats of about 1.5 million and about 1.8 million bath seats in use. In 2000, JPMA estimated annual sales of bath seats at about one million and estimated up to 2 million bath seats in use for infants under one year of age.

C. ASTM Voluntary Standard

ASTM F 1967, "*Standard Consumer Safety Specification for Infant Bath Seats,*" was first published in 1999. Between 2003 and 2007, the ASTM standard was subsequently revised several times to exclude tub-like products and to include requirements that the Commission had proposed in a notice of proposed rulemaking it issued in 2003, 68 FR 74878 (December 29, 2003).

In response to changes in the ASTM standard, the design of bath seats changed significantly. The new designs use an arm that clamps onto the side of the bath tub rather than relying on suction cups for stability. In its proposed rule, the Commission referenced ASTM F 1967–08a, which was published in December 2008, and contains the same labeling, stability and leg opening requirements as the 2007 version. In April 2010, ASTM published a new version of ASTM F 1967. The differences between the 2008 and 2010 standards are insubstantial (one word in section 8.1.1). The 2010 version adopted none of the changes the Commission proposed. Thus, the final standard continues to reference ASTM F 1967–08a.

JPMA provides certification programs for juvenile products, including bath seats. Manufacturers submit their products to an independent testing laboratory to test the product for conformance to the ASTM standard.

Currently only one bath seat model is certified to ASTM F 1967–08a.

The ASTM standard includes general requirements common to many ASTM standards for children's products; performance requirements specific to bath seats to address the hazards of the bath seat tipping over or the child becoming entrapped and/or submerged in the leg openings; and labeling requirements to address the child coming out of the bath seat.

General requirements in the ASTM standard, none of which the Commission is modifying, include:

- Requiring compliance with CPSC's standards concerning sharp points and edges, small parts, and lead paint (16 CFR parts 1303, 1500.48, 1500.49, 1500.50, 1500.51, and 1501);
- Requirements for latching and locking mechanisms;
- Requirements to prevent scissoring, shearing and pinching;
- Entrapment testing for accessible holes and openings;
- Torque/tension test for graspable components; and
- A requirement that warning labels be permanent.

The ASTM standard's requirements specifically related to hazards posed by bath seats (as discussed in part F of this preamble, the Commission's rule modifies aspects of some of these requirements) include:

- A test for stability performed on a test platform containing both a slip resistant surface and a smooth surface to test whether the bath seat may tip over during use;
- Requirements for restraint systems requiring passive crotch restraint to prevent a child from sliding through front or sides of the seat;
- Static load test to test whether the bath seat may break or become damaged during use;
- A requirement that suction cups (if used) adhere to the bath seat and the surface;
- A leg opening requirement to prevent children from sliding through these openings;
- A leg opening requirement restricting the expansiveness of the seating area to prevent the child from slumping and becoming entrapped in a reclined position; and
- Requirements for warning labels and instruction manual.

D. Incident Data

Since publication of the NPR in the **Federal Register** of September 3, 2009, the CPSC staff identified five new fatalities and five new non-fatal incidents, all of which occurred in 2009. Three deaths and three additional non-fatal incidents involved bath seat products (not combination infant bath tub-bath seat products) meeting the stability requirements of either F 1967–04 or F 1967–07. One death involved an earlier pre-2004 bath seat product and the remaining death involved a combination infant bath tub-bath seat product that was certified to the 2004 edition of the bath seat and bath ring standard (F 1967–04) but is no longer being produced. (Combination bath tub-bath seat products are no longer covered by F 1967 and will be covered by a new separate infant bath tub-specific standard.) This fatality is not included in the frequency statistics. The data update for the final rule also located additional information enabling CPSC staff to identify two 2005 fatality case reports, previously considered to be independent, as being a single case.

Taking into account these changes in the data, from 1983 through November 30, 2009, there have been 174 reported fatalities involving bath seats, although more fatalities may have occurred because fatality reporting is not considered to be complete for 2006, 2007, 2008, and 2009. All of these fatalities were submersions.

There were 300 non-fatal bath seat incidents reported to CPSC staff in this 1983 through November 30, 2009 time frame. A submersion hazard was identified in 154 of these non-fatal incidents of which 117 were actual submersion incidents. (Submersion is defined as the act of placing, or the condition of being, under water. A submersion hazard indicates that submersion is possible, as a direct result of the incident. An actual submersion is when the victim actually became submerged as a result of the incident.) The remaining 146 reports were non-submersion hazards such as lacerations and limb entrapments.

None of the identifiable products involved in the fatal bath seat incidents were certified to meet ASTM F 1967–08a or its predecessor, ASTM F 1967–07. Four of the non-fatal incidents involved products certified to ASTM F 1967–07, neither of which were submersion hazards, and thus were not life threatening.

Of the 174 fatal incidents, 23 involved products that were identified as being certified to the 2004 version of the ASTM standard. Three of these were due to the arm of the bath seat disengaging from the bath tub. Fifty-four of the non-fatal incidents involved bath seats certified to the 2004 version of the ASTM voluntary standard.

E. Response to Comments on the NPR of September 3, 2009

The Commission received seven comments on the NPR of September 3, 2009. Four comments from individual consumers supported a mandatory safety standard for infant bath seats. In addition, the Commission received three specific comments on various aspects of the NPR. These three comments were from IISG (an international testing laboratory); the Juvenile Products Manufacturers Association (JPMA); and one comment from various consumer groups (Consumers Union, Kids in Danger, and Consumer Federation of America). These comments and the Commission's responses to them are discussed below.

1. Leg Opening Requirement

a. *Comment:* One commenter asked that the rule be clarified to indicate that the torso probe shall be inserted in a straight direction and it is not allowed to be inserted partially and then rotated along some minor axis to make it pass through the hole.

Response: In the NPR, the Commission proposed a change to the voluntary standard that called for the torso probe to be inserted in all orientations of the leg openings to determine if any position can create a slip through and/or entrapment hazard. This change was proposed because the language in the ASTM standard, which stated that the probe should be inserted in the most adverse orientation, was open to interpretation by the person performing the test. The language the commenter suggests would actually make the requirement less restrictive than what is already in the voluntary standard. For this reason, the Commission disagrees with the recommendation.

b. *Comment:* One commenter argued that the proposed change to the leg opening torso probe would not have prevented the two incidents discussed in the NPR when children fit both their legs and hips through a single leg hole of the bath seat. The commenter asserted that reducing the leg opening might exacerbate entrapment and ingress and egress conditions. The commenter believes that the ASTM standard has optimized this probe size, is consistent with other standards that provide similar submarining protection, and should not be changed.

Response: Although in these two incidents children did become entrapped in the leg holes, of more concern is the fact the victims' pelvis and torso were able to penetrate the leg openings. Once the pelvis goes through

the leg hole, the victim is in serious danger of submersion because the waist and upper torso are more malleable and therefore more capable of squeezing through the leg holes. Therefore, contrary to the commenter's characterization of the incidents, the leg holes failed to prevent a potential submersion condition. The infants were not endangered by the entrapment as much as they were endangered by their position during their entrapment. These incidents show a failure in the design of the torso probe and the leg opening test which was developed to prevent the manufacture of leg holes that allow a pelvis to fit through them. As a photograph taken of the actual victim from one of the incidents clearly shows, in that incident the pelvis had fit through the leg opening. The current bath seat torso probe used to test the leg openings was based on probes from other juvenile products that do not normally entail use with wet, naked babies. The data associated with these two incidents suggest that the unique use of a bath seat in a watery, soapy environment requires a smaller probe. Reducing the size of leg openings by making the torso probe more rounded at the corners and slightly smaller will prevent future submersion incidents.

The issue of entrapment during ingress and egress is irrelevant to the leg hole opening test method. The Commission is aware that consumers have encountered difficulties with getting infants in and out of some models of bath seats currently sold in the United States. However, the size and shape of the leg hole opening is only one factor in the overall design of a bath seat's occupant retention space. Such features as the shape of the seat, the slope of the supports, and the thickness and the type of materials used to make the bath seat are not determined by the performance requirements of the standard. The leg hole opening test does not dictate any other dimensional or design requirements for bath seats, leaving the designer ample freedom to design a bath seat that allows easy entry and exit.

c. *Comment:* One commenter approved of the proposed change to the torso probe and conducting testing in all orientations, but stated that incident data indicate that leg openings on models currently meeting the ASTM standard may still pose this hazard.

Response: The Commission concurs. The Commission's changes to the torso probe are intended to address such incidents.

2. Stability Issues

a. *Comment:* One commenter states that the pass/fail criteria in the ASTM standard were specifically created to require that both the attachment disengage from the test platform and that the product fail to return to the manufacturer's intended use position after being tested. The commenter asserts that both conditions must be present in order to constitute a failure. The commenter argues that the proposal to consider a tilt angle of 12-degrees or more from the bath seat's initial starting position to be a failure is not indicative of an unsafe condition and "is a departure from the primary intent of the requirement which is to determine if the bath seat tips."

Response: The two parts of the criteria were added to the ASTM standard at different times, and there is no language to suggest that both conditions must be met in order to constitute a failure. If that were the intent, then there would be no need to add the second pass/fail criteria because if the bath seat disengaged from the test platform (condition #1), then obviously it would not return to the manufacturer's intended use position (condition #2). This second condition was added in the 2007 standard to address those situations where a bath seat started tipping, to a degree that could be hazardous, but did not fully disengage from the tub. The Commission's modification to the ASTM standard clarifies the intent, as well as ensuring that a bath seat which significantly tips during the stability test, but returns to a fully upright condition, is not in compliance with the requirement.

b. *Comment:* The same commenter argues that the 12 degree tilt test "is unrelated to submersion risk and would not reduce the risk of injury and submersion incidences identified in the incident data. The risk of submersion presents itself when the position of the product indicates that the child's head area would be in a compromising position."

Response: CPSC agrees with the last statement presented above which is why the Commission is modifying the ASTM standard to provide a clearer definition of the pass/fail criteria. If the bath seat is tilted, children can slump over, lean over, and expose their faces to the water more easily than if the bath seat is not tilted.

c. *Comment:* The same commenter states that the 17-pound force used in the stability testing in the ASTM standard was based on the assumption that the older user of a bath seat would apply his/her total weight in the head location when in a seated position. However, the commenter states, it is more likely that the child would exert only a percentage of his/her total body weight.

Response: According to the rationale in the ASTM standard (Appendix, part X1.17), the original basis for the 17-pound force is that it represents 60 percent of the 95th percentile (27.8 pound) body weight for oldest users (which was for 12 to 15 month old children at the time the requirement was developed), not the child's total body weight. A review of the incident data shows that fatal incidents that occurred in the newer style bath seats (which are designed for children who cannot yet pull themselves to a standing position) involved babies whose weights ranged from 15 to 30 pounds, with at least two of the victims (ages 8 and 9 months) being 30 pounds at the time of their deaths. Thus, it is foreseeable that a child of this size may use the product and, as the commenter recognizes, exert a percentage of his/her body weight. Thus, the 17-pound force is still valid.

d. *Comment:* The same commenter argues that the Commission's change to the failure definition (adding the 12 degree tilt angle test) would prohibit even "infinitesimal movements" of the bath seat with little affect on safety.

Response: The Commission disagrees that this additional requirement would prohibit infinitesimal movement. The ASTM standard could be interpreted very strictly to not allow any movement or tilt of the bath seat from the original position. By adding the 12 degree tilt limit, the stability test allows bath seats some controlled flexibility.

e. *Comment:* The same commenter asserts that the 12 degree tilt angle is random and lacks any rationale as to how exceeding this angle could result in a compromising unsafe condition.

Response: In developing this requirement, CPSC staff conducted an analysis looking at various water levels and possible head positions of occupants vs. angles of bath seats to determine what level of tilt was potentially hazardous. In addition, CPSC staff looked at other ASTM standards, such as those for infant bouncer seats and toys which use a 10 degree table or tilt when testing for stability. Lastly, staff acknowledged that the requirement must allow for the ductility of the aluminum rod test fixture combined with some expected ductility or flexing of the bath seat itself. Therefore, the staff conducted testing to determine the maximum level of tilt that might be expected solely due to the flexibility of the bath seat and the test rig. As a result of this work, staff

selected a tilt angle of 12 degrees as the pass/fail criteria to insure passing products will remain in the manufacturer's intended use position.

Thus, the 12 degree angle will allow for some inherent flexibility in the system (the product and the test rig) as a whole, but would fail a bath seat that: (1) Stayed firmly clamped to the bath tub but the bath seat itself experienced significant ductility (*i.e.,* its ability to be fashioned into a new form or drawn out without breaking) or flexibility (12 degrees or more) during the testing; or (2) had a clamping mechanism that lost firm contact with the bath tub and allowed the bath seat to tilt 12 degrees or more during the test.

f. *Comment:* The same commenter argues that, so long as the product remains attached, the angle at which it may tilt during testing does not affect the safety of the bath seat. The commenter asks, if the product were to reach a 15 degree angle, how would this angle result in an unsafe condition if the product remains attached?

Response: CPSC disagrees with the commenter's assertion that the condition of the product during the test has no bearing on safety. In the test, a 17-pound load is applied and then released. In real life, if a child leans over a bath seat railing, he/she may not be able to sit back upright. Young infants do not have a good sense of balance, and the more the bath seat allows them to tilt forward, the less likely they will be able to return to an upright position. If a child's body remains tilted forward, this could result in his/her face becoming submerged in the water. Once an infant's face is submerged, the infant may not pull his/her face out of the water. Infants may be physically capable of lifting their heads, but they may not do so because they do not recognize the need to do so or because they breathe in a lungful of water before trying to lift their head. Bath seats should never allow an infant's face to be submerged under water. In addition, another argument against allowing any significant tilt during the test is that the more the seat tilts forward, the higher the likelihood for a child to crawl out of the seat. When the seat is far enough forward, even if it has not tipped over, the child can stand (hunched over) on his/her feet with legs still through the leg holes, and this would also make a tilted seat hazardous.

g. *Comment:* One commenter agreed that the pass/fail criteria in the ASTM stability requirements need clarification, but recommended that the Commission consider any movement from the bath seat's originally fixed position to be a failure.

Response: There are three ways that a bath seat can fail the stability requirement as proposed in the NPR (and finalized in the rule): (1) If the bath seat tips over (and remains tipped over after the test); (2) if any attachment point disengages from (is no longer in contact with) the test platform (bath tub) and the bath seat fails to return to the manufacturer's recommended use position after the test; and (3) if the measured tilt angle during the test ever exceeds 12 degrees.

The first two pass/fail criteria above were already required under the voluntary standard, and the third one was proposed by CPSC as a new additional requirement in the NPR, and is also in the final rule. With regard to the third criteria, there are two different ways in which a bath seat can tilt during stability testing. The first is the tilt that might occur when the bath seat attachment slips or moves from its original fixed position. The second is the tilt that can occur due to the flexibility between all the parts of the bath seat and the bath seat test fixture (the aluminum rod and clamping devices). Depending on the product, it is possible to have both factors contribute to the tilt, or just have the second factor contribute to the tilt.

There is no way to eliminate the flexibility of the system (the bath seat and the test fixture) entirely. The flexibility of the aluminum rod itself can result in a two degree tilt. When the clamping fixtures and then the expected flexibility of the plastic used in the product are added, there is inherent flexibility in the system that cannot be totally eliminated. A tilt test must allow for this flexibility among all the components of the system. Twelve degrees allows for some practical amount of flexibility that is inherent in a bath seat and the test rig, but is still not a significant tilt angle that might compromise the safety of the occupant.

3. Changes to Test Platform Preparation

Comment: One commenter stated that, while it agrees with the application of the soap solution inside and outside of the tub, it believes that the soap solution should be applied once the product has been installed, if manufacturers present this as a prerequisite to use in instructional literature because clamping mechanisms rely on a clean tub side surface for effectiveness.

Response: Regardless of instructional literature or warnings, it is foreseeable that caregivers will install the bath seat on a wet and soapy tub; therefore, bath seats should be tested under such conditions.

4. Weighing the Seat Down

Comment: One commenter recommended adding a statement requiring removal of the weight once the seat is flooded to eliminate the potential for a counterweight to be included during the test.

Response: The Commission agrees with this comment and has included such a statement in the final rule.

5. Maximum Water Level

Comment: One commenter recommended that all bath seats be labeled to indicate a maximum water level to be used. The comment stated that, because 96% of all deaths, injuries, and other incidents involve bath seats used in water depths greater than one or two inches, the fill line demarcation should be specified at depths of no greater than two inches.

Response: The Commission is concerned that a water line could imply a safe water level. However, children can drown in very little water. In addition, because of various bath seat designs, some of which may elevate the bath seat, two inches of water in the tub can correspond to a water level insufficient to cover the occupant's legs. Thus, the maximum water level recommended would change based on the design of the bath seat, and would not necessarily reflect a "safe level". The Commission believes that the ASTM wording required in the user instruction, "Babies can drown in as little as 1 inch of water. ALWAYS bathe your infant using as little water as necessary," describes the risk associated with any level of water in a more accurate manner. If there was a water line indicator that could visually express the increasing risk with increasing water depth without implying that a shallow level was "safe," then CPSC staff may agree with the suggestion. At this time, CPSC staff does not believe a maximum water level requirement should be added to the standard, but does believe it is something that manufacturers could consider for their products. CPSC staff will continue to monitor this issue and the Commission could add such a requirement in the future if it is feasible.

6. Incident Data

Comment: One comment notes that the numbers of fatalities stated in the NPR do not reflect the increased fatality rate of recent years. Although the 171 reported fatalities involving bath seats from 1983 through 2008 represents an average of 6.6 reported deaths per year over the 26 year period, an analysis of the most recent years for which there is

complete data (1998 through 2007) shows an average of 9.7 reported deaths per year—nearly 50 percent more than stated. The commenter notes that, in comparison, baby bath tubs (a popular alternative) showed an average fatality rate of only 1.7 deaths per year during this same time period.

Response: Some fatalities in recent years involved older products. Caution should be used in any analysis since this product, its standards, and markets have changed significantly over the years. Comparisons between bath seats and infant bath tubs are not straightforward due to differences in the product and target population. Also, incidents are voluntarily reported and represent a minimum count. An updated memorandum of incident data was provided as part of the briefing package for the final rule.

7. Risks Related to Bath Seats and Risks Related to Bath Tubs

Comment: The same commenter noted that comparing the risks related to bath seats and those related to bath tubs indicates that the ASTM F 1967 standard has not been effective in reducing infant deaths in bath seats and that bath seats are inherently more dangerous than infant bath tubs.

Response: Risk analysis is very difficult to perform with these products due to changes in the market, standards, and product. Without accurate usage data, it was not possible for CPSC staff to perform this analysis. Comparisons between bath seats and infant bath tubs are not straightforward due to differences in the product and target population. Based on the ownership data that is available for infant bath seats and infant bath tubs, it is clear that infant bath tubs are far more prevalent than infant bath seats. It is also clear that many of those surveyed own both products, possibly using them at different stages in their child's development. It is also apparent that ownership rates for bath seats increased substantially between 1993 and 2002, but have since dropped off. In 2004, the ASTM standard was significantly modified (with additional changes made in 2007 and 2008), which means that determining the effectiveness of the voluntary standard requires examining the incidents with pre-2004 infant bath seats and comparing them to incidents involving post-2004 bath seats—in particular those that comply with the voluntary standard. Therefore, looking at only the number of annual incidents is insufficient to evaluate the voluntary standard's effectiveness or to evaluate its likely effectiveness, were it mandatory.

8. Unattended Bath Seats

Comment: One commenter stated that the bath seat standard must address the primary hazard pattern with these products—leaving an infant unattended—and encouraged the CPSC to "explore technology to ensure that it would be difficult to use a bath seat unless a caregiver is in close proximity to the product."

Response: The Commission is open to suggestions to overcome the tendency of caregivers to feel confident leaving children unsupervised in bath seats. To date, no practical solutions to this serious problem have been developed, except for warning labels, which were last strengthened in the ASTM voluntary standard in 2007.

9. CPSIA Process

a. *Comment:* One commenter stated that the Commission "should not modify existing effective standards unless it can clearly substantiate on the record before it that such changes will provide a demonstrable reduction of injury." The commenter noted that the ASTM standard was originally published in 1999 and has undergone several revisions since then through the ASTM subcommittee and task group process and that CPSC has participated in this process. The commenter states that it sees "little value in revising the current requirements in this standard by using the NPR regulatory process" and is "concerned that the imposition of additional requirements without demonstrable evidence that they will both enhance bath safety and not create unintended entrapment related hazards, will restrict the availability of potentially lifesaving products."

Response: Section 104(b) of the CPSIA requires the Commission to use the notice and comment rulemaking process under the Administrative Procedure Act to promulgate consumer product safety standards for durable infant or toddler products. The CPSIA directs the Commission to issue a rule that is "substantially the same as" the applicable voluntary standard or "more stringent than" the voluntary standard if the more stringent standard "would further reduce the risk of injury associated with the product." *See* section 104(b)(1)(B) of the CPSIA. The statute does not require that the Commission, in the commenter's words, "clearly substantiate on the record before it that such change will provide a demonstrable reduction in injury." Section 104 of the CPSIA takes durable infant or toddler products out of the Commission's usual rulemaking procedure and all of the findings that would be required under sections 7 and 9 of the Consumer Product Safety Act ("CPSA"). For these products, Congress wanted "the highest level of safety for such products that is feasible." See section 104(b)(2) of the CPSIA. The Commission recognizes that the ASTM standard has been in place for numerous years and has been refined through ASTM's standard-setting process. Nevertheless, incidents continue to occur. Under the mandate of section 104 of the CPSIA, the Commission is promulgating more stringent requirements where necessary to address certain design features that CPSC staff believes contribute to some of these continuing deaths and torso entrapments. The staff has conducted testing and performed analyses to support the requirements that are different from the ASTM requirements and that it believes will reduce the risk of injury from infant bath seats.

b. *Comment:* The same commenter states that it believes "the most streamlined approach to following the primary congressional mandate that standards required to be developed are to be 'substantially the same as' applicable voluntary standards, would be to adopt a regulation that wholly adopts the existing ASTM standard, with the ability to subject it to the ASTM update and review process. CPSC can assure itself veto authority as part of an implementing regulation, which provides it with the ability to restrict diminution of effective ASTM standard provisions, similar to the authority applicable under CPSIA Section 106, as a check to changes that reduce stringent protections." The commenter suggests that CPSC adopt ASTM F 1967–08a as a consumer product safety standard issued by the Commission under section 9 of the CPSA and that any additional changes to the pending ASTM standard be submitted to the ASTM standard setting process. The commenter states, "this process could also incorporate a provision by rule that a reservation of right to the CPSC to object to any subsequent revisions to the ASTM Standard, similar to that afforded under CPSIA Section 106(g)."

Response: The standard the Commission proposed for infant bath seats incorporates by reference most of ASTM F 1967–08a with a few modifications to strengthen the standard. Section 104(b) of the CPSIA sets forth the procedure for these standards for durable infant or toddler products, and it is different from what Congress provided in section 106 of the CPSIA. It is doubtful that the Commission, by rule, could change the procedure Congress provided for rules

under section 104 of the CPSIA to the one Congress provided for rules under section 106 of the CPSIA.

F. Assessment of Voluntary Standard ASTM F 1967–08a and Description of the Final Rule

1. Section 104(b) of the CPSIA: Consultation and CPSC Staff Review

Section 104(b) of the CPSIA requires the Commission to assess the effectiveness of the voluntary standard in consultation with representatives of consumer groups, juvenile product manufacturers and other experts. This consultation process began in October 2008 during the ASTM subcommittee meeting regarding the ASTM infant bath seat voluntary standard. The Commission has reviewed the incident data and the ASTM F 1967–08a standard and conducted testing on bath seats to assess the ASTM standard.

Consistent with section 104(b) of the CPSIA, this rule establishes a new 16 CFR part 1215, "Safety Standard for Bath Seats." The new part incorporates by reference the requirements for bath seats in ASTM F 1967–08a with certain changes to specific provisions to strengthen the ASTM standard as discussed below. These modifications are almost identical to the changes the Commission proposed in the NPR of September 3, 2009. Differences from the NPR are noted in the discussion below.

2. Description of the Final Rule, Including Changes to the ASTM Standard's Requirements

While most requirements of the ASTM standard are sufficient to reduce the risk of injury posed by bath seats, the Commission has determined to modify several provisions in the standard to make them more stringent and further reduce the risk of injury and to clarify the test procedures. The following discussion describes the final rule, including changes to the ASTM requirements, and notes any changes from the NPR. In addition, some editing and formatting changes have been made which make the final text different from the NPR. These changes were made at the request of the Office of the **Federal Register** and do not alter the substance of the rule.

a. Scope (§ 1215.1)

The final rule states that part 1215 establishes a consumer product safety standard for infant bath seats manufactured or imported on or after a date which would be six months after the date of publication of a final rule in the **Federal Register**.

The Commission received no comments on this provision in the NPR and is finalizing it without change.

b. Incorporation by Reference (§ 1215.2(a))

Section 1215.2(a) explains that, except as provided in § 1215.2(b), each infant bath seat must comply with all applicable provisions of ASTM F 1967–08a, "Standard Consumer Safety Specification for Infant Bath Seats," which is incorporated by reference. Section 1215.2(a) also provides information on how to obtain a copy of the ASTM standard or to inspect a copy of the standard at the CPSC.

The Commission received no comments on this provision in the NPR and is finalizing it without change.

c. Definition of Bath Seat (§ 1215.2(b)(1)(i))

In the NPR, the Commission proposed changing the definition of bath seat to the definition in a previous NPR the Commission had issued in 2003—"an article that is used in a bath tub, sink, or similar bathing enclosure and that provides support, at a minimum, to the front and back of a seated infant during bathing by a caregiver * * *."

The Commission received no comments on this provision and is finalizing it without change.

d. Stability Requirement

Limiting the tilt of the bath seat (§ 1215.2(b)(2)(i), (b)(4)(i), and (b)(5)(i)). As discussed in the preamble to the proposed rule (74 FR at 45720 through 45721), when testing bath seats, CPSC staff found that the clamping mechanism on the JPMA-certified bath seat lifted from the side of the tub and continued to tip when force was applied. The clamp did not disengage from the tub, but the arm rest contact points were no longer in contact with the tub surface. This situation allows for possible misinterpretation of the ASTM standard's pass/fail criteria because the bath seat tilted from its original position while the clamp remained attached to the side of the tub. Moreover, this scenario could present a hazard to an infant using a bath seat. As explained in greater detail in the response to comments in section E of this preamble above, with the bath seat in this position an infant could submerge his/her face in the water, and the tilt of the seat could increase the likelihood the infant will crawl out of the seat. Thus, the NPR proposed a requirement to limit the allowable tilt angle of the bath seat during the stability test. This modification is added in several places of the ASTM standard: To section 6.1, between sections 7.4.2.2 and 7.4.2.3, and between sections 7.4.2.3 and 7.4.2.4. The Commission proposed that a bath seat capable of tilting 12 degrees or more during testing be considered a failure. This limit was determined after measuring, and allowing for the flexibility of, current products. CPSC staff also considered other ASTM standards such as those for infant bouncer seats and toys. These standards use a 10 degree table or tilt when testing stability, and so the Commission proposed a tilt angle just above that level.

The final rule retains the 12 degree tilt limit. (We discussed comments relating to stability at part E of this preamble.)

The final rule also clarifies the language in section 6.1 of the ASTM standard to make it consistent with the definition of bath seat. This is a change from the NPR. Thus, the final rule removes the beginning phrase in section 6.1: "for bath seats which provide support for an occupant's back and support for the sides or front of the occupant or both." Given the definition of bath seat in the final rule, this phrase is redundant, and the final rule, therefore, eliminates it.

Clarifying the order of steps in the stability test (§ 1215.2(b)(3)). The final rule retains other proposed changes clarifying the order of steps to be performed when conducting the stability test. The Commission proposed re-ordering the steps specified in the ASTM standard for preparing the test surface and installing the bath seat to clarify that the test platform should be flooded before installing the bath seat.

Test solution application (§ 1215.2(b)(3)(i)(B)). The Commission proposed that a test solution be applied to all areas where the product may make contact while in use. As explained in the NPR's preamble (74 FR at 45721), the ASTM standard requires that a soapy test solution "thoroughly saturate the coverage area" which is defined in the ASTM standard as any internal surface of the tub well or tub bottom that makes contact with the product. In its testing of bath seats, CPSC staff found that spraying the soap solution on the top and outer surface contact points as well as the interior surfaces affected the final position of the bath seat and therefore could affect the results of the test. The Commission recognizes that the outside of a tub may become wet, and this may affect the ability of a bath seat's attachment arm to remain stable. The final rule retains this requirement. (We discussed comments relating to test platform preparation at part E of this preamble.)

Measuring water levels (§ 1215.2(b)(3)(i)(D)). When testing the stability of bath seats, CPSC staff noted that it can be difficult to obtain accurate water level measurements because the unoccupied bath seat may float when the test platform is flooded. To address this, the Commission proposed to add a clarifying statement: "For the purpose of measuring the water level, the product's seating surface can be temporarily weighed down to prevent the seat from floating."

In response to a comment to the NPR (see part E of this preamble), the final rule retains this change, but also adds the following clarifying language: "The weight shall be removed following the measurement of the water level and prior to conducting the test."

e. Leg Opening Requirement (§ 1215.2(b)(6)(i) Through (8))

According to recent incident reports, children have fit both legs and their hips through a single leg hole of a bath seat that complies with the ASTM standard. The torso probe specified in the ASTM standard used to test the size of the leg openings is not sufficiently analogous to the human infant in this wet environment. This has resulted in a child's torso fitting through a leg hole when the ASTM torso probe does not. The Commission proposed decreasing the length of the vertical and horizontal axes of the wood torso probe specified in the ASTM standard by approximately five percent and rounding the corners of the probe resulting in a 1.45″ radius rather than the current 1″ radius size of the probe. To accomplish this, the Commission proposed modifications to Figure 4 in the ASTM standard that shows the torso probe. As explained in the preamble to the NPR (*see* 74 FR at 45721) and in the response to comments in section E above, the Commission believes that changes in the test probe would not restrict the utility of the product, but would still allow many possible designs for bath seats, even ones which would accommodate large children.

The NPR also proposed changing (at § 1215.2(b)(6)(i) and (7)(i)) the ASTM standard's instruction in section 7.7.1 and 7.7.2 of the ASTM standard to insert the test probe "* * * in the most adverse orientation into each opening." The Commission proposed changing this language because the terms "the most" appearing with respect to adverse orientation is open to interpretation. The final rule retains the proposed wording that the probe needs to be inserted "in *all* orientations to determine if any position can create a slip through and/or entrapment hazard."

f. Size of Warning Label Requirement (§ 1215.2(b)(9) and(10))

According to the incident data, one hazard associated with almost all of the deaths that are reported involving bath seats is caregivers leaving children unattended in the bath seat. For example, of the 23 deaths reported from 2004–2009, where the bath seat product was certified to meet the stability requirements of ASTM F 1967–04, 21, or more than 91%, occurred when caregivers reported leaving the child for as little as 1 minute. (This data, collected by CPSC staff only reflects full reporting of deaths through 2006.)

While ASTM 1967–07 updated the language of the warning label (*see* 1967–07 section 8.1), the size of the warning label has not changed in any of the prior four updates to this standard. (The previous standards required letters not less than 0.2 in. (5 mm) in height for the safety alert symbol, the signal word, and all other words that are all capital letters, with all remaining text not less than 0.1 in. (2.5 mm) in height.) The warning label explains, among other things, caregivers should "ALWAYS keep baby within adult's reach." The final rule doubles the size of this warning in order to raise the visibility of this vital information to caregivers.

G. Effective Date

In the NPR, the Commission proposed that the standard would become effective six months after publication of a final rule. The Commission received no comments on the proposed effective date. The final rule provides that the rule will become effective six months after publication and thus will require that bath seats manufactured or imported on or after that date must meet this standard.

H. Regulatory Flexibility Act

The Regulatory Flexibility Act ("RFA") generally requires that agencies review final rules for their potential economic impact on small entities, including small businesses. 5 U.S.C. 604.

Three firms currently market infant bath seats in the United States: One large domestic manufacturer, one small foreign manufacturer and one small domestic importer. All of these companies' bath seats are expected to require modifications to meet the bath seat standard. This final regulatory flexibility analysis focuses on the small domestic importer.

As noted in the NPR preamble (*see* 74 FR at 45722), the effect of the regulation on importers of bath seats would be felt indirectly, requiring a shift in suppliers rather than the design and production of a different product. The impact on the small domestic importer is expected to be small. The small domestic importer would most likely respond by discontinuing the import of its non-complying bath seat, either replacing the bath seat with a complying product or another juvenile product (the firm currently imports approximately 165 juvenile products, of which three are substitutes for its imported bath seat).

Hence, even if the cost of developing a compliant product did prove to be a barrier for individual small firms, the loss of bath seats as a product category is expected to be minor and would likely be mitigated by increased sales of competing products, such as multi-stage infant bathtubs, or entirely different juvenile products.

I. Environmental Considerations

The Commission's regulations provide a categorical exclusion for the Commission's safety standards from any requirement to prepare an environmental assessment or an environmental impact statement as they "have little or no potential for affecting the human environment." 16 CFR 1021.5(c)(1). This rule falls within the categorical exclusion.

J. Paperwork Reduction Act

Sections 8 and 9 of ASTM F 1967–08 contain requirements for marking, labeling and instructional literature that are considered "information collection requirements" under the Paperwork Reduction Act, 44 U.S.C. 3501–3520. In a separate notice in this issue of the **Federal Register**, the Commission is publishing a notice requesting comments on this collection of information.

K. Preemption

Section 26(a) of the CPSA, 15 U.S.C. 2075(a), provides that where a "consumer product safety standard under [the CPSA]" is in effect and applies to a product, no State or political subdivision of a State may either establish or continue in effect a requirement dealing with the same risk of injury unless the State requirement is identical to the Federal standard. (Section 26(c) of the CPSA also provides that States or political subdivisions of States may apply to the Commission for an exemption from this preemption under certain circumstances.) Section 104(b) of the CPSIA refers to the rules to be issued under that section as "consumer product safety rules," thus implying that the preemptive effect of section 26(a) of the CPSA would apply. Therefore, a rule issued under section

104 of the CPSIA will invoke the preemptive effect of section 26(a) of the CPSA when it becomes effective.

L. Certification

Section 14(a) of the CPSA imposes the requirement that products subject to a consumer product safety rule under the CPSA, or to a similar rule, ban, standard, or regulation under any other act enforced by the Commission, must be certified as complying with all applicable CPSC-enforced requirements. 15 U.S.C. 2063(a). Such certification must be based on a test of each product or on a reasonable testing program or, for children's products, on tests on a sufficient number of samples by a third party conformity assessment body recognized by the Commission to test according to the applicable requirements. As discussed above in section K, section 104(b)(1)(B) of the CPSIA refers to standards issued under that section, such as the rule for infant bath seats established in this notice, as "consumer product safety standards." By the same reasoning, such standards would also be subject to section 14 of the CPSA. Therefore, any such standard would be considered to be a consumer product safety rule to which products subject to the rule must be certified.

Because infant bath seats are children's products, they must be tested by a third party conformity assessment body accredited by the Commission. The Commission is issuing a separate notice of requirements to explain how laboratories can become accredited as a third party conformity assessment bodies to test to this new infant bath seat safety standard. (Infant bath seats also must comply with all other applicable CPSC requirements, such as the lead content requirements of section 101 of the CPSIA and potentially the phthalate content requirements in section 108 of the CPSIA should the bath seat incorporate a toy component, the tracking label requirement in section 14(a)(5) of the CPSA, and the consumer registration form requirements in section 104 of the CPSIA.)

List of Subjects in 16 CFR 1215

Consumer protection, Incorporation by reference, Imports, Infants and children, Labeling, Law enforcement, and Toys.

■ Therefore, the Commission amends Title 16 of the Code of Federal Regulations by adding part 1215 to read as follows:

PART 1215—SAFETY STANDARD FOR INFANT BATH SEATS

Sec.

1215.1 Scope.
1215.2 Requirements for infant bath seats.

Authority: The Consumer Product Safety Improvement Act of 2008, Pub. Law 110–314, § 104, 122 Stat. 3016 (August 14, 2008).

§ 1215.1 Scope.

This part 1215 establishes a consumer product safety standard for infant bath seats manufactured or imported on or after December 6, 2010.

§ 1215.2 Requirements for infant bath seats.

(a) Except as provided in paragraph (b) of this section, each infant bath seat shall comply with all applicable provisions of ASTM F 1967–08a, Standard Consumer Safety Specification for Infant Bath Seats, approved November 1, 2008. The Director of the Federal Register approves this incorporation by reference in accordance with 5 U.S.C. 552(a) and 1 CFR part 51. You may obtain a copy from ASTM International, 100 Bar Harbor Drive, P.O. Box 0700, West Conshohocken, PA 19428; telephone 610–832–9585; *www.astm.org.* You may inspect a copy at the Office of the Secretary, U.S. Consumer Product Safety Commission, Room 820, 4330 East West Highway, Bethesda, MD 20814, telephone 301–504–7923, or at the National Archives and Records Administration (NARA). For information on the availability of this material at NARA, call 202–741–6030, or go to: *http://www.archives.gov/federal_register/code_of_federal_regulations/ibr_locations.html.*

(b) Comply with the ASTM F 1967–08a standard with the following additions or exclusions:

(1) Instead of complying with section 3.1.1 of ASTM F 1967–08a, comply with the following:

(i) 3.1.1 *Bath seat, n*—an article that is used in a bath tub, sink, or similar bathing enclosure and that provides support, at a minimum, to the front and back of a seated infant during bathing by a caregiver. This does not include products that are designed or intended to retain water for bathing.

(ii) [Reserved]

(2) In addition to section 6.1 of ASTM F 1967–08a, comply with the following:

(i) 6.1 *Stability*—* * * If any time during the application of force, the seat is no longer in the initial 'intended use position' and is tilted at an angle of 12 degrees or more from its initial starting position, it shall be considered a failure.

(ii) [Reserved]

(3) Instead of complying with section 7.4.1. of ASTM F 1967–08a, comply with the following:

(i) 7.4.1 *Surface Preparation and Product Installation:*

(A) 7.4.1.1 Prepare the test surface as follows:

(B) 7.4.1.2 For all surfaces on the test platform where the product makes contact, clean the coverage area (as defined in 7.4.3.3) with a commercial cleaner intended for bath tubs, then wipe the coverage area with alcohol and allow to dry.

(C) 7.4.1.3 Using a spray bottle containing a 1:25 mixture of test solution (*see* table 1) to distilled water, immediately before each test run, thoroughly saturate all test platform surfaces above the water line where the product makes contact and where contact might be expected.

(D) 7.4.1.4 Flood the test platform with clear water that is at an initial temperature of 100 to 105° F (37.8 to 10.6° C) and a depth of 2 in. (51 mm) above the highest point of the occupant seating surface. Install the product according to the manufacturer's instructions onto the test platform specified in 7.4.3. For the purpose of measuring the water level, the product's seating surface can be temporarily weighed down to prevent the seat from floating. The weight shall be removed following the measurement of the water level and prior to conducting the test.

(ii) [Reserved]

(4) After section 7.4.2.2 and before section 7.4.2.3 of ASTM F 1967–08a, comply with the following:

(i) Rigidly install an inclinometer to the test bar above the location where force is to be applied. The weight of the inclinometer and the fastening method shall be less than or equal to 2.2 pounds. The inclinometer shall have a measurement tolerance of less than or equal to 0.5 degrees. Measure and record the pre-test angle of the test bar.

(ii) [Reserved]

(5) Between section 7.4.2.3 (including Note 2) and section 7.4.2.4 of ASTM F 1967–08a, comply with the following:

(i) Measure and record the maximum angle of the test bar during the application of the 17.0 lbf load. Calculate the absolute value of the Change in Angle in degrees. Change in Angle = (Angle measured during test)—(Angle measured pre-test).

(ii) [Reserved]

(6) Instead of complying with the first sentence in section 7.7.1 of ASTM F 1967–08a, comply with the following:

(i) 7.7.1 With the bath seat in each of the manufacturer's recommended use position(s), insert the tapered end of the Bath Seat Torso Probe (*see* Fig. 4) in all orientations into each opening. * * *

(ii) [Reserved]

(7) Instead of complying with the first sentence in section 7.7.2 of ASTM F 1967–08a, comply with the following:

(i) 7.7.2 With the bath seat in each of the manufacturer's recommended use position(s), insert the tapered end of the Bath Seat Shoulder Probe (*see* Fig. 6) in all orientations into each opening.

* * *

(ii) [Reserved]

(8) Instead of Figure 4 of ASTM F 1967–08a, use the following:

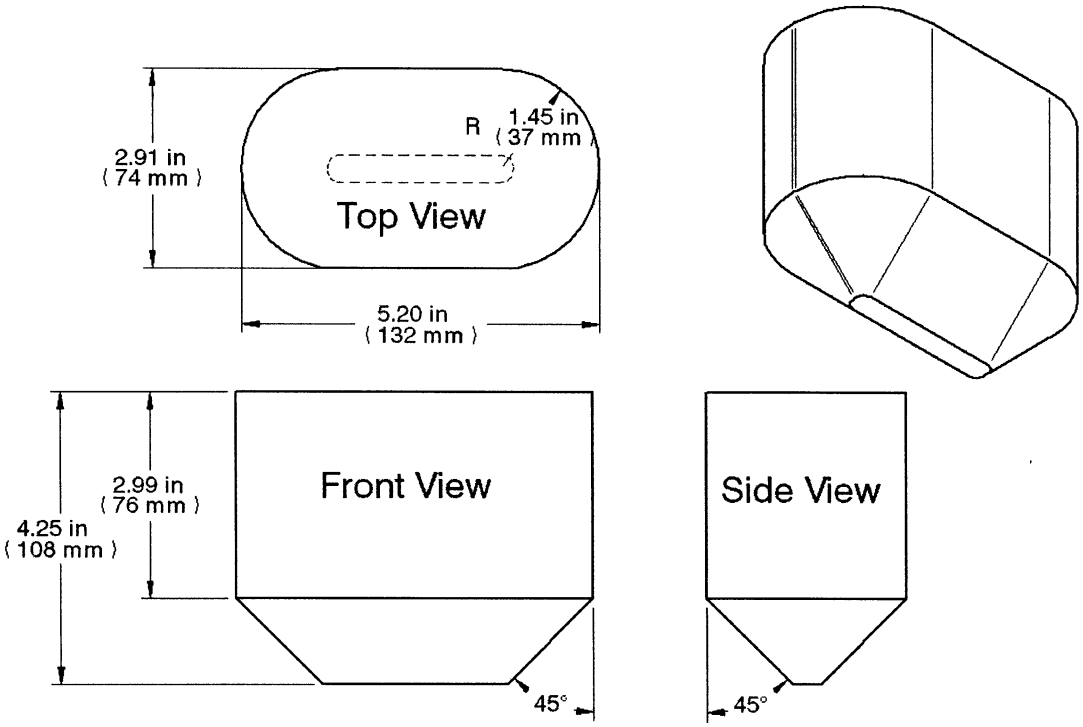

Figure 4: Modified Bath Seat Torso Probe

(9) Instead of complying with section 8.1.1 of ASTM F 1967–08a, comply with the following:

(i) 8.1.1 The safety alert symbol, the signal word, and all other words that are all capital letters shall be in sans serif type face with letters not less than 0.4 in. (10 mm) in height, with all remainder of the text not less than 0.2 in. (5 mm) in height. Specified warning(s) on both the product and the package shall be distinctively separated from any other wording or designs and shall appear in the English language at a minimum. They shall also be highly visible and in a contrasting color to the background on which they are located.

(ii) [Reserved]

(10) In addition to complying with section 8.2 of ASTM F 1967–08a, comply with the following:

(i) 8.2 * * * The specified warnings may not be placed in a location that allows the warning(s) to be obscured or rendered inconspicuous when in the manufacturer's recommended use position.

(ii) [Reserved]

Dated: May 25, 2010.

Todd Stevenson,

Secretary, U.S. Consumer Product Safety Commission.

[FR Doc. 2010–13073 Filed 6–3–10; 8:45 am]

BILLING CODE 6355–01–P

DEPARTMENT OF HEALTH AND HUMAN SERVICES

25 CFR Part 900

DEPARTMENT OF THE INTERIOR

25 CFR Part 1000

Bureau of Indian Affairs

25 CFR Part 900

Indian Health Service

25 CFR Part 900

RIN 1076–AE86

Indian Self-Determination Act Contracts and Annual Funding Agreements—Appeal Procedures

AGENCIES: Bureau of Indian Affairs, Interior; Indian Health Service, Health and Human Services.

ACTION: Final rule.

SUMMARY: The Bureau of Indian Affairs (BIA) in the Department of the Interior (DOI) and the Indian Health Service (IHS) in the Department of Health and

Human Services (HHS) are making limited technical amendments to their joint regulations governing contracts and annual funding agreements under the Indian Self-Determination and Education Assistance Act to update the appeals procedures.

DATES: This rule is effective July 6, 2010.

FOR FURTHER INFORMATION CONTACT:

—Terrence Parks, Acting Chief, Division of Self-Determination, Office of Indian Services, Bureau of Indian Affairs, Department of the Interior, 1849 C Street, NW., Mail Stop 4513, Washington, DC 20240, telephone 202–513–7616;

—Sharee M. Freeman, Director, Office of Self-Governance, Office of the Assistant Secretary—Indian Affairs, Department of the Interior, 1951 Constitution Avenue, NW., Mail Stop 355, Washington, DC 20240, telephone 202–219–0240;

—Betty Gould, Regulations Officer, Indian Health Service, Department of Health and Human Services, 12300 Twinbrook Parkway, Suite 450, Rockville, MD 20857, telephone 301–443–7899.

Persons who use a telecommunications device for the hearing impaired may call the Federal Information Relay Service at 800–877–8339.

SUPPLEMENTARY INFORMATION:

I. Background

A. Board of Contract Appeals

In 25 CFR parts 900 and 1000, BIA and IHS have promulgated regulations governing contracts and annual funding agreements with Indian tribes under the Indian Self-Determination and Education Assistance Act, as amended, 25 U.S.C. 450f–450n, 458aa–458aaa–18. Included in those regulations are procedures allowing for appeals to the Interior Board of Contract Appeals, pursuant to 25 U.S.C. 450m-1(d), 458ff(c), and the Contract Disputes Act, 41 U.S.C. 601–613.

Effective January 6, 2007, Congress abolished the Interior Board of Contract Appeals (IBCA) and transferred its functions—including appeals under 25 CFR Parts 900 and 1000—to a new Civilian Board of Contract Appeals (CBCA) within the General Services Administration (GSA). Public Law 109–163, section 847, 119 Stat, 3391 (2006); *see* 71 FR 65825 (Nov. 9, 2006). BIA and IHS are therefore revising their regulations to substitute references to CBCA for IBCA in three sections in Part 900 and five sections in Part 1000. Procedures applicable to appeals to CBCA were published by GSA at 48 CFR part 6101, 72 FR 36794 (July 5, 2007), and are referenced in revised 25 CFR 900.216(b) and 1000.430.

IHS previously published its own final rule amending 25 CFR 900.222 to change the name and address of the appeals board from IBCA to CBCA and amending 25 CFR 900.229 to change references to IBCA to CBCA. 71 FR 76600 (Dec. 21, 2006). However, the IHS rule failed to change references to "U.S. Department of the Interior" and "IBCA" in § 900.222(e), and it did not amend §§ 900.6 and 900.216, which continue to refer to IBCA. This rule completes the changes to Part 900 that IHS initiated with its December 2006 rule, and it makes similar changes to Part 1000.

B. Equal Access to Justice Act

Additional technical changes are being made to the regulations in Parts 900 and 1000 dealing with the Equal Access to Justice Act (EAJA), 5 U.S.C. 504. First, section 900.177 currently provides that EAJA claims against either DOI or HHS will be heard by the Interior Board of Indian Appeals (IBIA) under 43 CFR 4.601 through 4.619. This is only partially correct. While some EAJA claims against DOI are heard by IBIA, most are heard initially by administrative law judges (ALJs) within DOI, with a right of appeal to IBIA. Most EAJA claims against HHS are also heard initially by ALJs within DOI, with a right of appeal to the HHS Departmental Appeals Board.

To eliminate the apparent inconsistency between section 900.177 and the referenced DOI EAJA regulations over who initially decides EAJA claims, this rule removes the phrase "by the IBIA" from § 900.177. As a result, EAJA claims against either DOI or HHS will be heard initially by the adjudicative officer who decided the merits, whether an ALJ or IBIA, consistent with DOI's EAJA regulations. For claims against DOI, appeals from an ALJ's decision will be decided by IBIA under 43 CFR part 4, subpart D, as provided in 43 CFR 4.626(a). For claims against HHS, appeals from an ALJ's decision will be decided by the HHS Departmental Appeals Board under 45 CFR part 13.

In a future rulemaking, HHS will propose applying its EAJA regulations at 45 CFR part 13 to an EAJA claim against HHS, so that the HHS regulations apply to both the claim and the appeal. Additionally, the future rule would delete the reference in § 900.177 to 25 CFR 900.165(b) because that paragraph merely refers to the statement of the appeal option that must be contained in the recommended decision.

Second, this rule updates the references to DOI's EAJA regulations in § 900.177 from 43 CFR 4.601 through 4.619 to 43 CFR 4.601 through 4.628 to reflect amendments to those EAJA regulations published in 2006. *See* 71 FR 6364 (Feb. 8, 2006).

Third, this rule updates the references in § 900.216(c) to the applicable EAJA regulations. Now that CBCA, rather than IBCA, will be deciding EAJA claims in post-award disputes, the CBCA procedural regulations at 48 CFR 6101.30 and 6101.31 will apply. But since those regulations do not contain provisions regarding eligibility for an award, the standards for an award, and allowable fees and expenses, the substantive EAJA regulations at 43 CFR 4.602 and 4.604 through 4.606 (DOI) and 45 CFR 13.4 through 13.7 (HHS) will continue to apply. *See Tidewater Contractors, Inc.* v. *Department of Transportation,* No. CBCA 982–C, 2008 WL 2718917 (Civilian B.C.A.) (July 10, 2008), slip op. at 5 (CBCA looked to Department of Transportation regulations for allowable attorney fee rate).

Corresponding revisions are made to 25 CFR 1000.431.

C. Cross References

Finally, this rule corrects a number of cross references in Part 900. The notice of appeal rights in section 900.156(b) refers in two places to 25 CFR 900.157, when the correct reference is 25 CFR 900.158 (compare section 900.152). The notices of appeal rights in section 900.165(b) and (c) both contain meaningless references to those sections, when the correct reference is 25 CFR 900.166.

The notices of appeal rights in § 900.172(b) and (c) repeat the references from § 900.165(b) and (c); but § 900.172 is dealing with emergency reassumptions, while § 900.165 is dealing with non-emergency reassumptions. The correct reference in § 900.172(b) and (c) is 25 CFR 900.173.

Similarly, § 900.253(b) refers to 25 CFR 900.160 and 900.161; but § 900.253(b) is dealing with emergency reassumptions, while §§ 900.160 and 900.161 are dealing with non-emergency reassumptions. The correct reference in § 900.253(b) is 25 CFR 900.171.

II. Procedural Requirements

A. Determination To Issue Final Rule Without Prior Notice and Comment.

BIA and IHS have determined that the public notice and comment provisions of the Administrative Procedure Act, 5 U.S.C. 553(b), do not apply to this rulemaking because the changes being

made relate solely to matters of agency organization, procedure, and practice. They therefore satisfy the exemption from notice and comment rulemaking in 5 U.S.C. 553(b)(A).

B. Review Under Procedural Statutes and Executive Orders

BIA and IHS have reviewed this rule under the following statutes and executive orders governing rulemaking procedures: the Unfunded Mandates Reform Act of 1995, 2 U.S.C. 1501 *et seq.*; the Regulatory Flexibility Act, 5 U.S.C. 601 *et seq.*; the Small Business Regulatory Enforcement Fairness Act of 1996, 5 U.S.C. 801 *et seq.*; the Paperwork Reduction Act, 44 U.S.C. 3501 *et seq.*; the National Environmental Policy Act of 1969, 42 U.S.C. 4321 *et seq.*; the Information Quality Act, Public Law 106–554; Executive Order 12630 (Takings); Executive Order 12866 (Regulatory Planning and Review); Executive Order 12988 (Civil Justice Reform); Executive Order 13132 (Federalism); Executive Order 13175 (Tribal Consultation); and Executive Order 13211 (Energy Impacts). BIA and IHS have determined that this rule does not trigger any of the procedural requirements of those statutes and executive orders, since this rule merely updates the Indian Self-Determination and Education Assistance Act regulations to refer to the correct appeal entities and revised EAJA regulations and to correct various cross references.

List of Subjects

25 CFR Part 900

Administrative practice and procedure, Buildings and facilities, Claims, Government contracts, Government property management, Grant programs–Indians, Health care, Indians, Indians–business and finance.

25 CFR Part 1000

Grant programs–Indians, Indians.

■ For the reasons stated in the preamble, BIA and IHS amend their regulations in 25 CFR parts 900 and 1000 as follows:

PART 900—CONTRACTS UNDER THE INDIAN SELF–DETERMINATION AND EDUCATION ASSISTANCE ACT

■ 1. The authority citation for part 900 continues to read as follows:

Authority: 25 U.S.C. 450f *et seq.*

Subpart B—Definitions

■ 2. In § 900.6, revise the definition of "Contract appeals board" to read as follows:

§ 900.6 Definitions.

* * * * *

Contract appeals board means the Civilian Board of Contract Appeals (CBCA).

* * * * *

Subpart L—Appeals

§ 900.156 [Amended]

■ 3. In § 900.156(b), remove the reference "25 CFR 900.157" and add in its place "25 CFR 900.158" wherever it appears.

§ 900.165 [Amended]

■ 4. In § 900.165(b), remove the reference "25 CFR 900.165(b)" and add in its place "25 CFR 900.166"wherever it appears.

■ 5. In § 900.165(c), remove the reference "25 CFR 900.165(c)" and add in its place "25 CFR 900.166" wherever it appears.

§ 900.172 [Amended]

■ 6. In § 900.172(b), remove the reference "25 CFR 900.165(b)" and add in its place "25 CFR 900.173" wherever it appears.

■ 7. In § 900.172(c), remove the reference "25 CFR 900.165(c)" and add in its place "25 CFR 900.173" wherever it appears.

■ 8. Revise § 900.177 to read as follows:

§ 900.177 Does the Equal Access to Justice Act (EAJA) apply to appeals under this subpart?

Yes. EAJA claims against DOI or HHS will be heard under 43 CFR 4.601 through 4.628. For HHS, appeals from an EAJA award will be according to 25 CFR 900.165(b).

Subpart N—Post-Award Contract Disputes

■ 9. Revise § 900.216(b) and (c) to read as follows:

§ 900.216 What other statutes and regulations apply to contract disputes?

* * * * *

(b) If the matter is submitted to the CBCA, 48 CFR part 6101; and

(c) The Equal Access to Justice Act (EAJA), 5 U.S.C. 504 and 28 U.S.C. 2412, and regulations at 48 CFR 6101.30, 6101.31 (CBCA), 43 CFR 4.602, 4.604 through 4.628 (DOI), and 45 CFR 13.4 through 13.7 (HHS).

■ 10. Revise § 900.222(e) to read as follows:

§ 900.222 What goes into a decision?

* * * * *

(e) Contain the following language:

This is a final decision. You may appeal this decision to the Civilian Board of Contract Appeals (CBCA), 1800 F Street, NW., Washington, DC 20245. If you decide to appeal, you must, within 90 days from the date you receive this decision, mail or otherwise furnish written notice to the CBCA and provide a copy to the individual from whose decision the appeal is taken. The notice must indicate that an appeal is intended, and refer to the decision and contract number. Instead of appealing to the CBCA, you may bring an action in the U.S. Court of Federal Claims or in the United States District Court within 12 months of the date you receive this notice.

§ 900.253 [Amended]

■ 11. Revise § 900.253(b) to read as follows:

* * * * *

(b) A statement explaining the contractor's right to a hearing on the record under § 900.171 within 10 days of the emergency reassumption or such later date as the contractor may approve;

* * * * *

PART 1000—ANNUAL FUNDING AGREEMENTS UNDER THE TRIBAL SELF–GOVERNMENT ACT AMENDMENTS TO THE INDIAN SELF–DETERMINATION AND EDUCATION ACT

■ 12. The authority citation for part 1000 continues to read as follows:

Authority: 25 U.S.C. 458aa–gg.

Subpart R—Appeals

■ 13. Revise § 1000.421(b) to read as follows:

§ 1000.421 What is the purpose of this subpart?

* * * * *

(b) The Civilian Board of Contract Appeals (CBCA) for certain post-AFA disputes;

* * * * *

§ 1000.428 [Amended]

■ 14. In § 1000.428, remove "IBCA" and add in its place "CBCA".

■ 15. In § 1000.429, revise the section heading and introductory text to read as follows:

§ 1000.429 What statutes and regulations govern resolution of disputes concerning signed AFAs or compacts that are appealed to the CBCA?

Section 110 of Public Law 93–638 (25 U.S.C. 450m–l) and the regulations at 25 CFR 900.216 through 900.230 apply to disputes concerning signed AFAs and compacts that are appealed to the CBCA, except that any references to the Department of Health and Human

Services are inapplicable. For purposes of such appeals:

* * * * *

■ 16. Revise § 1000.430 to read as follows:

§ 1000.430 Who handles appeals regarding reassumption for imminent jeopardy?

Appeals regarding reassumption of Title I-eligible PFSAs are handled by the IBIA under the procedures in 25 CFR 900.171 through 900.176. Appeals regarding reassumption of PFSAs that are not Title I-eligible are handled by the CBCA under the procedures in 48 CFR part 6101.

■ 17. Revise § 1000.431 to read as follows:

§ 1000.431 Does the Equal Access to Justice Act (EAJA) apply to appeals under this subpart?

Yes. EAJA claims against the DOI will be heard under 48 CFR 6101.30, 6101.31 (CBCA) and 43 CFR 4.602, 4.604 through 4.628 (DOI) and under the Equal Access to Justice Act, 5 U.S.C. 504 and 28 U.S.C. 2412.

Dated: October 30, 2009.

Larry Echo Hawk,

Assistant Secretary, Indian Affairs, Department of the Interior.

Dated: May 24, 2010.

Yvette Roubideaux,

Director, Indian Health Service, Department of Health and Human Services.

[FR Doc. 2010–13297 Filed 6–3–10; 8:45 am]

BILLING CODE 4310–79–P

POSTAL SERVICE

39 CFR PART 111

General Information on Postal Service

AGENCY: Postal Service.

ACTION: Final rule.

SUMMARY: The Postal Service announces the issuance of Issue 300, dated May 11, 2009, of the Mailing Standards of the United States Postal Service, Domestic Mail Manual (DMM), and its incorporation by reference in the Code of Federal Regulations.

DATES: *Effective Date:* This final rule is effective on June 4, 2010. The incorporation by reference of Issue 300, May 11, 2009, of the DMM is approved by the Director of the Federal Register as of June 4, 2010.

FOR FURTHER INFORMATION CONTACT: Lizbeth Dobbins (202) 268–3789.

SUPPLEMENTARY INFORMATION: The most recent Issue 300 of the Domestic Mail Manual (DMM) was issued on May 11, 2009.

This Issue of the DMM contains all Postal Service domestic mailing standards. This issue continues to (1) increase the user's ability to find information, (2) increase confidence that users have found all the information they need, and (3) reduce the need to consult multiple chapters of the Manual to locate necessary information. Issue 300, dated May 11, 2009, set forth specific changes, such as new standards throughout the DMM to support the pricing changes approved by the Governors of the United States Postal Service. The new prices and standards were effective May 11, 2009. Changes to mailing standards will continue to be published through **Federal Register** notices and the Postal Bulletin, and will appear in the next printed version of Mailing Standards of the United States Postal Service, Domestic Mail Manual, and in the online version available via Postal Explorer *http://pe.usps.com.*

List of Subjects in 39 CFR Part 111

Administrative practice and procedure, Incorporation by reference.

■ In view of the considerations discussed above, the Postal Service hereby amends 39 CFR Part 111 as follows:

PART 111—GENERAL INFORMATION ON POSTAL SERVICE

■ 1. The authority citation for 39 CFR Part 111 continues to read as follows:

Authority: 5 U.S.C. 552(a); 13 U.S.C. 301–307; 18 U.S.C. 1692–1737; 39 U.S.C. 101, 401, 403, 404, 414, 416, 3001–3011, 3201–3219, 3403–3406, 3621, 3622, 3626, 3632, 3633, 5001.

■ 2. Amend § 111.3(f) by adding the following new entry at the end of the table: § 111.3 Amendment to the Mailing Standards of the United States Postal Service, Domestic Mail Manual.

* * * * *

(f) * * *

Transmittal letter for issue publication	Dated	Federal Register
Issue 300	May 12, 2008	[Insert FR citation for this Final Rule].
Issue 300	May 11, 2009	[Insert FR citation for this Final Rule].

■ 3. Amend § 111.4 by removing "May 7, 2008" and adding "June 4, 2010".

Neva R. Watson,

Attorney, Legislative.

[FR Doc. 2010–13356 Filed 6–3–10; 8:45 am]

BILLING CODE 7710–12–P

ENVIRONMENTAL PROTECTION AGENCY

40 CFR Part 7

[EPA–HQ–OA–2004–0002; FRL–9158–9]

RIN 2090–AA37

Nondiscrimination on the Basis of Age in Programs or Activities Receiving Federal Assistance from the Environmental Protection Agency

AGENCY: Environmental Protection Agency (EPA).

ACTION: Direct final rule.

SUMMARY: EPA is taking direct final action on Nondiscrimination on the Basis of Age in Programs or Activities Receiving Federal Assistance from the Environmental Protection Agency. This document sets out EPA rules for implementing the Age Discrimination Act of 1975, as amended. The Act prohibits discrimination on the basis of age in programs or activities receiving Federal assistance.

DATES: This rule is effective on October 4, 2010 without further notice, unless EPA receives adverse comment by August 3, 2010. If EPA receives adverse comment, we will publish a timely withdrawal in the **Federal Register** informing the public that the rule will not take effect.

ADDRESSES: Submit your comments, identified by Docket ID No. EPA–HQ–OA–2004–0002, by one of the following methods:

- *http://www.regulations.gov:* Follow the on-line instructions for submitting comments.
- *E-mail: docket.oei@epa.gov.*

• *Fax:* 202–566–0562.

• *Mail:* OEI Docket, U.S. EPA, Mail Code: 28221T, 1200 Pennsylvania Ave., NW., Washington, DC 20460.

• *Hand delivery:* OEI Docket, EPA Docket Center, Room 3334, EPA West Building, 1301 Constitution Ave., NW., Washington, DC 20460. Such deliveries are only accepted during the Docket's normal hours of operation, and special arrangement should be made for deliveries of boxed information.

Instructions: Direct your comments to Docket ID No. EPA–HQ–OA–2004–0002. EPA's policy is that all comments received will be included in the public docket without change and may be made available online at *http://www.regulations.gov,* including any personal information provided, unless the comment includes information claimed to be Confidential Business Information (CBI) or other information whose disclosure is restricted by statute. Do not submit information that you consider to be CBI or otherwise protected through *http://www.regulations.gov* or e-mail. The *http://www.regulations.gov* Web site is an "anonymous access" system, which means EPA will not know your identity or contact information unless you provide it in the body of your comment. If you send an e-mail comment directly to EPA without going through *http://www.regulations.gov,* your e-mail address will be automatically captured and included as part of the comment that is placed in the public docket and made available on the Internet. If you submit an electronic comment, EPA recommends that you include your name and other contact information in the body of your comment and with any disk or CD–ROM you submit. If EPA cannot read your comment due to technical difficulties and cannot contact you for clarification, EPA may not be able to consider your comment. Electronic files should avoid the use of special characters, any form of encryption, and be free of any defects or viruses. For additional information about EPA's public docket, visit the EPA Docket Center homepage at *http://www.epa.gov/epahome/dockets.htm.*

Docket: All documents in the docket are listed in the *http://www.regulations.gov* index. Although listed in the index, some information is not publicly available, *e.g.,* CBI or other information whose disclosure is restricted by statute. Certain other material, such as copyrighted material, will be publicly available only in hard copy. Publicly available docket materials are available either electronically in *http://www.regulations.gov* or in hard copy at the OEI Docket in the EPA Docket Center (EPA/DC), EPA West, Room B102, 1301 Constitution Ave., NW., Washington, DC. The EPA/DC Public Reading Room is open from 8 a.m. to 4:30 p.m., Monday through Friday, excluding legal holidays. The telephone number for the Reading Room is 202–566–1744, and the telephone number for the OEI Docket is 202–566–1752.

Submitting CBI: Do not submit this information to EPA through *http://www.regulations.gov* or e-mail. Clearly mark the part or all of the information that you claim to be CBI. For CBI information in a disk or CD ROM that you mail to EPA, mark the outside of the disk or CD–ROM as CBI and then identify electronically within the disk or CD–ROM the specific information that is claimed as CBI. In addition to one complete version of the comment that includes information claimed as CBI, a copy of the comment that does not contain the information claimed as CBI must be submitted for inclusion in the public docket. Information so marked will not be disclosed except in accordance with procedure set forth in 40 CFR Part 2.

Tips for Preparing Your Comments

• Identify the rulemaking by docket number and other identifying information (subject heading, **Federal Register** date and page number).

• Follow directions—The agency may ask you to respond to specific questions or organize comments by referencing a Code of Federal Regulations (CFR) part of section number.

• Explain why you agree or disagree; suggest alternatives and substitute language for your requested changes.

• Describe any assumptions and provide any technical information and/or data that you used.

• If you estimate potential costs or burdens, explain how you arrived at your estimate in sufficient detail to allow for it to be reproduced.

• Provide specific examples to illustrate your concerns, and suggest alternatives.

• Explain your views as clearly as possible, avoiding the use of profanity or personal threats.

• Make sure to submit your comments by the comment period deadline identified.

FOR FURTHER INFORMATION CONTACT: Tom Walker, U.S. Environmental Protection Agency, Office of Civil Rights, (Mail Code 1201A), 1200 Pennsylvania Ave., NW., Washington, DC 20460, telephone (202) 343–9894.

SUPPLEMENTARY INFORMATION:

Why Is EPA Using a Direct Final Rule?

EPA is publishing this rule without a prior proposed rule because we view this as a noncontroversial action and anticipate no adverse comment because (1) entities that have applied for and received assistance from EPA comply with the Age Discrimination Act of 1975. This rule implements the Age Discrimination Act of 1975, and would not substantively change existing obligations for recipients. (2) The current action has been reviewed and approved by the U.S. Department of Health and Human Services (HHS), the lead Federal agency that sets the government-wide standards to be followed by all Federal agencies implementing the Age Discrimination Act. However, in the "Proposed Rules" section of today's **Federal Register**, we are publishing a separate document that will serve as the proposed rule to the Age Discrimination regulations if adverse comments are received on this direct final rule. We will not institute a second comment period on this action. Any parties interested in the commenting must do so at this time. For further information about commenting on this rule, *see* the **ADDRESSES** section of this document.

If EPA receives adverse comment, we will publish a timely withdrawal in the **Federal Register** informing the public that this direct final rule will not take effect. We would address all public comments in any subsequent final rule based on the proposed rule.

I. General Information

These regulations implement provisions of the Age Discrimination Act of 1975, as amended. The Age Discrimination Act of 1975, 42 U.S.C. 6101 *et. seq.,* (The Act) prohibits discrimination on the basis of age in programs or activities receiving Federal assistance. The Act applies to persons of all ages. The Act also contains specific exceptions that permit the use of certain age distinctions and factors other than age that meet the Act's requirements. The Act however, does not cover employment discrimination on the basis of age. The Age Discrimination in Employment Act of 1967, 29 U.S.C. 621 *et. seq.,* (ADEA) applies specifically to employment practices and programs, both in the public and private sectors, and applies only to persons 40 and over. Complaints of employment discrimination based on age against an individual by recipients of Federal financial assistance are subject to the ADEA and should be filed administratively with the Equal Employment Opportunity Commission

(EEOC) (*see* 29 CFR part 1626). The EEOC has recently published in the **Federal Register** a Notice of Proposed Rulemaking (NPRM) under the authority of the ADEA (*see* 75 FR 7212 (Feb. 18, 2010)). EEOC's NPRM defines the term "reasonable factors other than age" (RFOA) under the ADEA, a term that is also used in the Age Discrimination Act and in the subject regulation. Because of the different statutory bases for the two regulations, the use of the term RFOA in EPA's regulation implementing the Age Discrimination Act has no effect on EEOC's regulation under the ADEA and the use of the term RFOA in EEOC's regulation has no effect on EPA's regulation. Nonetheless, EPA would accept comments about any potential impact of EEOC's definition on EPA's regulation. Parties interested in the ADEA action should refer to the **Federal Register;** 75 FR 7212 (Feb. 18, 2010).

The Act required the former Department of Health, Education, and Welfare (HEW) to issue general, government-wide regulations setting standards to be followed by all Federal agencies implementing the Act. These government-wide regulations, which were issued on June 12, 1979, (45 CFR part 90; 44 FR 33768) and became effective on July 1, 1979, required each Federal agency providing assistance to any program or activity to publish final regulations implementing the Act, and to submit final agency regulations to HEW (now the Department of Health and Human Services (HHS)), before publication in the **Federal Register**. (*See* 45 CFR 90.31.) The Act became effective on the effective date of HEW's final government-wide regulations (*i.e.,* July 1, 1979). The Act was amended by the Civil Rights Restoration Act of 1987, Public Law 100–259, 102 Stat. 28, to add a definition for the term "program or activity."

The Age discrimination regulations apply to all applicants for, and recipients of, EPA assistance in the operation of their programs or activities, and only establish and enforce statutory rights that prohibit discrimination on the basis of age. These regulations do not apply to any program or activity unless that program or activity applies for and/or receives Federal assistance from the Agency.

EPA's Age discrimination regulations which implement the Age Discrimination Act of 1975, will amend the U.S. Code of Federal Regulations (40 CFR Part 7) by adding Age as a protected classification to the Agency's nondiscrimination regulations. Currently, the Agency's nondiscrimination regulations prohibit discrimination on the basis of race, color, national origin, sex (gender), or disability in any program or activity receiving EPA assistance. The Age Discrimination regulations will become the new Part 7 Subpart F—Discrimination Prohibited on the Basis of Age.

The regulation states, "No person in the United States may, on the basis of age, be excluded from participation in, be denied the benefits of, or be subjected to discrimination under any program or activity receiving EPA assistance." (40 CFR 7.140) The specific prohibited actions are patterned after the regulations issued under Title VI of the Civil Rights Act of 1964 (40 CFR 7.30). As a general rule, separate or different treatment which denies or limits services from, or participation in, a program receiving Federal funds will be prohibited by these regulations.

The Act does include some exceptions to the general rule against age discrimination. The regulations provide definitions for two terms "normal operations" and "statutory objective" (40 CFR 7.25) that provide the framework for which the exceptions can apply. (40 CFR 7.150) For example, the normal operations and objectives of our public schools are to educate our nation's children. Public schools, for instance, have received Federal environmental grants, to establish ecology clubs or educate students on water restoration and beach ecology. These school programs are just a few examples of recipients operating under normal conditions and meeting their objectives while receiving Federal assistance targeted at a specific age group, and are therefore, permissible under the Act.

Recipients of EPA funds are also permitted to take an action otherwise prohibited by the Act, if the action is based on "reasonable factors other than age." (40 CFR 7.155) For example, children may be more vulnerable to environmental exposures (*i.e.* lead poisoning) than adults because their bodily systems are still developing. Providing grants to recipients to research these specific exposure risks in children play an important role in protecting children's health. Even though environmental toxins may also affect adults, it is thought that children are generally more vulnerable to such environmental exposures. Thus, recipients that are solely studying the unique environmental exposure risks to children (targeting a specific age group) are taking actions based on "reasonable factors other than age", and, such studies are therefore permissible under the Act. As noted above, the use of the term "reasonable factors other than age" in EPA's regulation has no effect on EEOC's RFOA definition under the ADEA and, conversely, the use of the term RFOA by the EEOC has no effect on EPA's regulation.

In addition, these regulations incorporate the provisions of the general regulations (45 CFR part 90; 44 FR 33768) permitting a recipient of a program to provide special benefits for children and the elderly. (40 CFR 7.165) These special benefits often take the form of special discounts or reduced fees for the elderly or children in a Federally funded program.

II. Rulemaking History

EPA first proposed regulations implementing the Age Discrimination Act as part of its proposed consolidated nondiscrimination regulations on January 8, 1981 (46 FR 2306–2312). The Age Discrimination Act provisions were not included in the final rule published on January 12, 1984 (49 FR 1656–66), because they had not been approved by HHS as required by the Act. During 1993 through 1998, the regulations were submitted to HHS and went through different revisions in an on-going effort between EPA and HHS. Because of the time lapse since the regulations were initially drafted, in 2002 EPA had conducted an internal re-review of the draft regulations. The draft Age Discrimination Act regulations were then resubmitted to HHS in 2002, which granted its approval later that year. In January 2003, new regulatory development guidelines were issued, which spurred another delay in the publication of EPA's draft Age regulations. Between 2003 and 2004, EPA's internal re-review resulted in various revisions to the draft regulations based on the new regulatory development guidelines. In 2005, EPA resubmitted its final draft Age discrimination regulations to HHS. The revised regulations were subsequently approved by HHS in 2006. EPA is now publishing these regulations as a direct final rule along, with a parallel proposed rule. Any comments submitted during the 1981, public comment period pertaining to the Age provisions of the consolidated nondiscrimination regulations are no longer available for viewing. Comments on the current rule are welcome. If EPA receives public comment on the current direct final rule, we will publish a timely withdrawal in the **Federal Register** informing the public that this direct final rule will not take effect. We would address all public comments in any subsequent final rule based on the current parallel proposed rule as mentioned above.

III. Statutory and Executive Orders Reviews

A. Executive Order 12866: Regulatory Planning and Review

Under Executive Order (EO) 12866 (58 FR 51735, October 4, 1993), this action is a "significant regulatory action." Accordingly, EPA submitted this action to the Office of Management and Budget (OMB) for review under EO 12866 and any changes made in response to OMB recommendations have been documented in the docket for this action.

B. Paperwork Reduction Act of 1995

This action does not impose any new information collection burden. EPA Form 4700–4 (Preaward Compliance Review Report for All Applicants Requesting Federal Assistance), which is used to collect compliance information under EPA's nondiscrimination regulations, already requests civil rights compliance information based on age under the Age Discrimination Act of 1975. The current version, which also requests civil rights compliance information based on race, color, national origin, sex, or handicap as well as age, has been in use since January 1990. The Office of Management and Budget (OMB) has previously approved the information collection requirements contained in the existing regulations at 40 CFR Part 7 under the provisions of the *Paperwork Reduction Act,* 44 U.S.C. 3501 *et seq.* and has assigned OMB control number 2030–0020. The OMB control numbers for EPA's regulations in 40 CFR are listed in 40 CFR Part 9.

C. Regulatory Flexibility Act (RFA)

The RFA generally requires an agency to prepare a regulatory flexibility analysis of any rule subject to notice and comment rulemaking requirements under the Administrative Procedure Act or any other statute unless the agency certifies that the rule will not have a significant economic impact on a substantial number of small entities. Small entities include small businesses, small organizations, and small governmental jurisdictions.

For purposes of assessing the impacts of today's rule on small entities, small entity is defined as: (1) A small business as defined by the U.S. Small Business Administration in 13 CFR 121.201; (2) a small governmental jurisdiction that is a government of a city, county, town, school district or special district with a population of less than 50,000; and (3) a small organization that is any not-for-profit enterprise which is independently owned and operated and is not dominant in its field.

After considering the economic impacts of today's direct final rule on small entities, I certify that this action will not have a significant economic impact on a substantial number of small entities. This direct final rule will not impose any requirements on small entities because it only formalizes existing requirements for entities receiving assistance from EPA and would not substantively change existing obligations on recipients. The requirements prohibiting age discrimination by recipients of Federal assistance that are in the Age Discrimination Act and the government-wide regulations have been in effect since 1979.

D. Unfunded Mandates Reform Act of 1995

Title II of the Unfunded Mandates Reform Act of 1995 (UMRA), Public Law 104–4, establishes requirements for Federal agencies to assess the effects of their regulatory actions on State, local, and Tribal governments and the private sector. Under section 202 of the UMRA, EPA generally must prepare a written statement, including a cost-benefit analysis, for proposed and final rules with "Federal mandates" that may result in expenditures to State, local, and Tribal governments, in the aggregate, or to the private sector, of $100 million or more in any one year. Before promulgating an EPA rule for which a written statement is needed, section 205 of the UMRA generally requires EPA to identify and consider a reasonable number of regulatory alternatives and adopt the least costly, most cost-effective or least burdensome alternative that achieves the objectives of the rule. The provisions of section 205 do not apply when they are inconsistent with applicable law. Moreover, section 205 allows EPA to adopt an alternative other than the least costly, most cost-effective or least burdensome alternative if the Administrator publishes with the final rule an explanation why that alternative was not adopted. Before EPA establishes any regulatory requirements that may significantly or uniquely affect small governments, including Tribal governments, it must have developed under section 203 of the UMRA a small government agency plan. The plan must provide for notifying potentially affected small governments, enabling officials of affected small governments to have meaningful and timely input in the development of EPA regulatory proposals with significant Federal intergovernmental mandates, and informing, educating, and advising small governments on compliance with the regulatory requirements.

Today's rule contains no Federal mandates under the regulatory provisions of Title II of the UMRA for State, local, or Tribal governments or the private sector for the following reasons: (1) The UMRA excludes from the definitions of "Federal intergovernmental mandate" and "Federal private sector mandate" duties that arise from conditions of Federal assistance; (2) The UMRA generally excludes from the definition of "Federal intergovernmental mandate" duties that arise from participation in a voluntary Federal program; (3) The UMRA excludes from the definition of "Federal private sector mandate" duties that arise from participation in a voluntary Federal program; and (4) The UMRA does not apply to rules that establish or enforce statutory rights that prohibit discrimination on the basis of race, color, religion, sex, national origin, age, handicap, or disability. These regulations were mandated by Congress in the Act. These regulations only establish and enforce statutory rights that prohibit discrimination on the basis of age. These regulations do not apply to any program or activity unless that program or activity applies for and receives Federal assistance from the Agency. Application for, and receipt of, Federal assistance from the Agency is entirely voluntary. No program or activity is required to apply for, or accept, Federal assistance from the Agency. Thus, today's rule is not subject to the requirements of sections 202 and 205 of the UMRA.

EPA has determined that this rule contains no regulatory requirements that might significantly or uniquely affect small governments. These regulations apply uniformly to all recipients of Federal assistance from the Agency, regardless of whether the recipient is a small government. Moreover, the application for, and acceptance of, Federal assistance from the Agency that triggers the applicability of these regulations is entirely voluntary. Furthermore, it has already been determined that these regulations will not have a significant economic impact on small entities.

E. Executive Order 13132: Federalism

Executive Order 13132 (64 FR 43255), entitled "Federalism," requires EPA to develop an accountable process to ensure "meaningful and timely input by State and local officials in the development of regulatory policies that have federalism implications." "Policies that have federalism implications" is defined in the Executive Order to

include regulations that have "substantial direct effects on the States, on the relationship between the national government and the States, or on the distribution of power and responsibilities among the various levels of government."

This direct final rule does not have federalism implications. It will not have substantial direct effects on the States, on the relationship between the national government and the States, or on the distribution of power and responsibilities among the various levels of government, as specified in Executive Order 13132. This rule does not directly impose any obligations on the States and there are no significant compliance costs associated with it. This rule only applies to State and non-State entities that apply for and receive assistance from EPA. When the recipient receives the EPA assistance, they accept the obligation to comply with EPA's Age Discrimination Act implementing regulations. Compliance obligations are, therefore, voluntary and contractual. No entity is required to apply for or accept EPA assistance. Thus, Executive Order 13132 does not apply to this rule.

In the spirit of Executive Order 13132, and consistent with EPA policy to promote communications between EPA and State and local governments, EPA specifically solicits comment on this direct final rule from State and local officials.

F. Executive Order 13175: Consultation and Coordination With Indian Tribal Governments

Executive Order 13175 (65 FR 67249), entitled "Consultation and Coordination with Indian Tribal Governments," requires EPA to develop an accountable process to ensure "meaningful and timely input by Tribal officials in the development of regulatory policies that have Tribal implications." This direct final rule does not have Tribal implications, as specified in Executive Order 13175. This rule does not directly impose any obligations on the Tribes and there are no significant compliance costs associated with it. This rule only applies to Tribal and non-Tribal entities that apply for and receive assistance from EPA. When the recipient receives the EPA assistance, it accepts the obligation to comply with EPA's Age Discrimination Act implementing regulations. Compliance obligations are, therefore, voluntary and contractual. No entity is required to apply for or accept EPA assistance. Thus, Executive Order 13175 does not apply to this rule. EPA specifically solicits additional comment on this direct final rule from Tribal officials.

G. Executive Order 13045: Protection of Children From Environmental Health & Safety Risks

Executive Order 13045 (62 FR 19885), "Protection of Children from Environmental Health Risks and Safety Risks," applies to any rule that: (1) Is determined to be "economically significant" as defined under Executive Order 12866, and (2) concerns an environmental health or safety risk that EPA has reason to believe may have a disproportionate effect on children. If the regulatory action meets both criteria, the Agency must evaluate the environmental health or safety effects of the planned rule on children, and explain why the planned regulation is preferable to other potentially effective and reasonably feasible alternatives considered by the Agency.

EPA interprets Executive Order 13045 as applying only to those regulatory actions that are based on health or safety risks, such that the analysis required under section 5–501 of the Order has the potential to influence the regulation. This direct final rule is not subject to Executive Order 13045 because it does not establish an environmental standard intended to mitigate health or safety risks.

H. Executive Order 13211: Actions That Significantly Affect Energy Supply, Distribution, or Use

This rule is not a "significant energy action" as defined in Executive Order 13211, "Actions Concerning Regulations That Significantly Affect Energy Supply, Distribution, or Use" (66 FR 28355 (May 22, 2001)) because it is not likely to have a significant adverse effect on the supply, distribution, or use of energy. EPA is taking action to approve rules for implementing the Age Discrimination Act of 1975, as amended. The Act prohibits discrimination on the basis of age in programs or activities receiving Federal assistance. Accordingly, we have concluded that this rule is not likely to have any adverse energy effects.

I. National Technology Transfer and Advancement Act

Section 12(d) of the National Technology Transfer and Advancement Act of 1995 ("NTTAA"), Public Law 104–113, 12(d) (15 U.S.C. 272n) directs EPA to use voluntary consensus standards in its regulatory activities unless to do so would be inconsistent with applicable law or otherwise impractical. Voluntary consensus standards are technical standards (*e.g.,* materials specifications, test methods, sampling procedures, and business practices) that are developed or adopted by voluntary consensus standards bodies. The NTTAA directs EPA to provide Congress, through OMB, explanations when the Agency decides not to use available and applicable voluntary consensus standards. This direct final rulemaking does not involve technical standards. Therefore, EPA is not considering the use of any voluntary consensus standards. EPA welcomes comments on this aspect of the direct final rulemaking and, specifically, invites the public to identify potentially-applicable voluntary consensus standards and to explain why such standards should be used in this regulation.

J. Executive Order 12898: Federal Actions To Address Environmental Justice in Minority Populations and Low-Income Populations

Executive Order 12898 (59 FR 7629 (Feb. 16, 1994)) establishes Federal executive policy on environmental justice. Its main provision directs Federal agencies, to the greatest extent practicable and permitted by law, to make environmental justice part of their mission by identifying and addressing, as appropriate, disproportionately high and adverse human health or environmental effects of their programs, policies, and activities on minority populations and low-income populations in the United States.

EPA has determined that this final rule will not have disproportionately high and adverse human health or environmental effects on minority or low-income populations because it does not affect the level of protection provided to human health or the environment. EPA is taking action to approve rules for implementing the Age Discrimination Act of 1975, as amended. The Act prohibits discrimination on the basis of age in programs or activities receiving Federal assistance. This rule does not adversely affect minority or low-income populations therefore, we have concluded that this rule will not have disproportionately high and adverse human health or environmental effects on minority or low-income populations.

K. Congressional Review Act

The Congressional Review Act, 5 U.S.C. 801 *et seq.,* as added by the Small Business Regulatory Enforcement Fairness Act of 1996, generally provides that before a rule may take effect, the agency promulgating the rule must submit a rule report, which includes a copy of the rule, to each House of the

Congress and to the Comptroller General of the United States. EPA will submit a report containing this rule and other required information to the U.S. Senate, the U.S. House of Representatives, and the Comptroller General of the United States prior to publication of the rule in the **Federal Register**. A Major rule cannot take effect until 60 days after it is published in the **Federal Register**. This action is not a "major rule" as defined by 5 U.S.C. 804(2). This rule will be effective October 4, 2010.

List of Subjects in 40 CFR Part 7

Environmental protection, Administrative practice and procedure, Age discrimination, Civil rights, Equal employment opportunity, Individuals with disabilities, Reporting and recordkeeping requirements, Sex discrimination.

Dated: May 27, 2010.

Lisa P. Jackson,

Administrator.

■ For the reasons stated in the preamble, 40 CFR part 7 is amended as follows:

PART 7—NONDISCRIMINATION IN PROGRAMS OR ACTIVITIES RECEIVING FEDERAL ASSISTANCE FROM THE ENVIRONMENTAL PROTECTION AGENCY

■ 1. The authority citation for part 7 is revised to read as follows:

Authority: 42 U.S.C. 2000d to 2000d–7 and 6101 *et seq.;* 29 U.S.C. 794; 33 U.S.C. 1251nt.

■ 2. Section 7.10 is revised to read as follows:

§ 7.10 Purpose of this part.

This part implements: Title VI of the Civil Rights Act of 1964, as amended; section 504 of the Rehabilitation Act of 1973, as amended; the Age Discrimination Act of 1975, as amended; and section 13 of the Federal Water Pollution Control Act Amendments of 1972, Public Law 92–500, (collectively, the Acts).

■ 3. Section 7.25 is amended by adding the definitions for "Action," "Age," "Age distinction," "Age-related term," "Normal operation," and "Statutory objective" in alphabetical order to read as follows:

§ 7.25 Definitions.

* * * * *

Action, for purposes of subpart F of this part, means any act, activity, policy, rule, standard, or method of administration; or the use of any policy, rule, standard, or method of administration.

* * * * *

Age, for purposes of subpart F of this part, means how old a person is, or the number of elapsed years from the date of a person's birth.

Age distinction, for purposes of subpart F of this part, means any action using age or an age-related term.

Age-related term, for purposes of subpart F of this part, means a word or words which necessarily imply a particular age or range of ages (for example; "children," "adult," "older persons," but not "student" or "grade").

* * * * *

Normal operation, for purposes of subpart F of this part, means the operation of a program or activity without significant changes that would impair its ability to meet its objectives.

* * * * *

Statutory objective, for purposes of subpart F of this part, means any purpose of a program or activity expressly stated in any Federal statute, State statute, or local statute or ordinance adopted by an elected, general purpose legislative body.

* * * * *

■ 4. Section 7.80(c)(1) is revised to read as follows:

§ 7.80 Applicants.

* * * * *

(c) * * *

(1) Notice of any lawsuit pending against the applicant alleging discrimination on the basis of race, color, sex, age, handicap, or national origin;

* * * * *

■ 5. Section 7.85 is amended by revising paragraph (a)(2), by redesignating the introductory text of paragraph (c) after the heading as paragraph (c)(1), and adding paragraph (c)(2) to read as follows:

§ 7.85 Recipients.

(a) * * *

(2) Racial/ethnic, national origin, age, sex and handicap data, or EPA Form 4700–4 information submitted with its application;

* * * * *

(c) *Self-evaluation.* (1) * * *

(2) Each recipient employing the equivalent of 15 or more full time employees may be required to complete a written self-evaluation of its compliance under the Age Discrimination Act as part of a compliance review or complaint investigation. This self-evaluation will pertain to any age distinction imposed in its program or activity receiving Federal assistance from EPA. If required, each recipient's self-evaluation shall identify and justify each age distinction imposed by the recipient and each recipient shall take corrective and remedial action whenever a self-evaluation indicates a violation of the Age Discrimination Act.

* * * * *

■ 6. The first sentence in § 7.95(a) is revised to read as follows:

§ 7.95 Notice of nondiscrimination.

* * * * *

(a) *Requirements.* A recipient shall provide initial and continuing notice that it does not discriminate on the basis of race, color, national origin, age, or handicap in a program or activity receiving EPA assistance or, in programs or activities covered by section 13, on the basis of sex. * * *

* * * * *

■ 7. The third sentence in § 7.110(a) is revised to read as follows:

§ 7.110 Preaward compliance.

* * * * *

(a) * * * When the OCR cannot make a determination on the basis of this information, additional information will be requested from the applicant, local government officials, or interested persons or organizations, including aged and handicapped persons or organizations representing such persons. * * *

* * * * *

■ 8. Section 7.120 is amended by adding a new fifth sentence to paragraph (a) and adding paragraph (d)(1)(iv) to read as follows:

§ 7.120 Complaint investigations.

* * * * *

(a) *Who may file a complaint.* * * * Complaints of employment discrimination based on age against an individual by recipients of Federal financial assistance are subject to the Age Discrimination in Employment Act of 1967 and should be filed administratively with the Equal Employment Opportunity Commission (*see* 29 CFR part 1626). * * *

* * * * *

(d) * * *

(1) * * *

(iv) Complaints alleging age discrimination under the Age Discrimination Act of 1975 will be referred to a mediation agency in accordance with § 7.180.

* * * * *

■ 9. A new subpart F, consisting of §§ 7.140 through 7.180, is added to read as follows:

Subpart F—Discrimination Prohibited on the Basis of Age

Sec.

7.140 General prohibition.
7.145 Specific prohibitions.
7.150 Exceptions to the rules against age discrimination—normal operation or statutory objective of any program or activity.
7.155 Exceptions to the rules against age discrimination—reasonable factors other than age.
7.160 Burden of proof.
7.165 Special benefits for children and the elderly.
7.170 Alternative funds disbursal procedures.
7.175 Exhaustion of administrative remedy.
7.180 Mediation of age discrimination complaints.

Subpart F—Discrimination Prohibited on the Basis of Age

§ 7.140 General prohibition.

No person in the United States may, on the basis of age, be excluded from participation in, be denied the benefits of, or be subjected to discrimination under any program or activity receiving EPA assistance.

§ 7.145 Specific prohibitions.

(a) As to any program or activity receiving EPA assistance, a recipient shall not directly or through contractual, licensing, or other arrangements on the basis of age:

(1) Exclude any individuals from, deny them the service, aid or benefits of, or subject them to discrimination under, a program or activity;

(2) Provide a person any service, aid or other benefit that is different, or is provided differently from that provided to others under the program or activity;

(3) Restrict a person in any way in the enjoyment of any advantage or privilege enjoyed by others receiving any service, aid, or benefit provided by the program or activity;

(4) Subject a person to segregation in any manner or separate treatment in any way related to receiving services or benefits under the program or activity;

(5) Deny a person or any group of persons the opportunity to participate as members of any planning or advisory body which is an integral part of the program or activity, such as a local sanitation board or sewer authority;

(6) In administering a program or activity receiving Federal financial assistance in which the recipient has previously discriminated on the basis of age, the recipient shall take affirmative action to provide remedies to those who have been injured by the discrimination.

(b) A recipient shall not use criteria or methods of administering its program or activity which have the effect of subjecting individuals to discrimination because of their age, or have the effect of defeating or substantially impairing accomplishment of the objectives of the program or activity with respect to individuals of a particular age.

(c) A recipient shall not choose a site or location of a facility that has the purpose or effect of excluding individuals from, denying them the benefits of, or subjecting them to discrimination under any program or activity to which this part applies on the ground of age; or with the purpose or effect of defeating or substantially impairing the accomplishment of the objectives of this subpart.

(d) The specific prohibitions of discrimination enumerated above do not limit the general prohibition of § 7.140.

§ 7.150 Exceptions to the rules against age discrimination—normal operation or statutory objective of any program or activity.

A recipient is permitted to take an action, otherwise prohibited by §§ 7.140 and 7.145, if the action reasonably takes into account age as a factor necessary to the normal operation or achievement of any statutory objective of a program or activity. An action reasonably takes into account age as a factor necessary to the normal operation or the achievement of any statutory objective of a program or activity if:

(a) Age is used as a measure or approximation of one or more other characteristics;

(b) The other characteristic(s) must be measured or approximated in order for the normal operation of the program or activity to continue, or to achieve any statutory objective of the program or activity;

(c) The other characteristic(s) can be reasonably measured or approximated by the use of age; and

(d) The other characteristic(s) are impractical to measure directly on an individual basis.

§ 7.155 Exceptions to the rules against age discrimination—reasonable factors other than age.

A recipient is permitted to take an action otherwise prohibited by §§ 7.140 and 7.145 which is based on a factor other than age, even though that action may have a disproportionate effect on persons of different ages. An action may be based on a factor other than age only if the factor bears a direct and substantial relationship to the normal operation of the program or activity or to the achievement of a statutory objective.

§ 7.160 Burden of proof.

The burden of proving that an age distinction or other action falls within the exceptions outlined in §§ 7.150 and 7.155 is on the recipient of EPA financial assistance.

§ 7.165 Special benefits for children and the elderly.

If a recipient operating a program which serves the elderly or children in addition to persons of other ages, provides special benefits to the elderly or to children the provision of those benefits shall be presumed to be voluntary affirmative action provided that it does not have the effect of excluding otherwise eligible persons from participation in the program.

§ 7.170 Alternative funds disbursal procedures.

(a) When EPA withholds funds from a recipient under Subpart F of these regulations, the Administrator may disburse the withheld funds directly to an alternate recipient: Any public or non-profit private organization or agency, or State or political subdivision of the State.

(b) The Administrator will require any alternate recipient to demonstrate the ability to achieve the goals of the Federal statute authorizing the funds and these regulations (40 CFR Part 7).

§ 7.175 Exhaustion of administrative remedy.

(a) A complainant may file a civil action following the exhaustion of administrative remedies under the Age Discrimination Act. Administrative remedies are exhausted if:

(1) 180 days have elapsed since the complainant filed the complaint and EPA has made no finding with regard to the complaint; or

(2) EPA issues any finding in favor of the recipient.

(b) If EPA fails to make a finding within 180 days or issues a finding in favor of the recipient, EPA shall:

(1) Promptly advise the complainant of this fact; and

(2) Advise the complainant of his or her right to bring a civil action for injunctive relief; and

(3) Inform the complainant that:

(i) The complainant may bring a civil action only in a United States district court for the district in which the recipient is found or transacts business;

(ii) A complainant prevailing in a civil action has the right to be awarded the costs of the action, including reasonable attorney's fees, but that the complainant must demand these costs in the complaint;

(iii) Before commencing the action, the complainant shall give 30 days notice by registered mail to the Secretary of the Department of Health and Human Services, the Administrator,

the Attorney General of the United States, and the recipient;

(iv) The notice must state: The alleged violation of the Age Discrimination Act; the relief requested; the court in which the complainant is bringing the action; and, whether or not attorney's fees are demanded in the event the complainant prevails; and

(v) The complainant may not bring an action if the same alleged violation of the Age Discrimination Act by the same recipient is the subject of a pending action in any court of the United States.

§ 7.180 Mediation of age discrimination complaints.

(a) The OCR will refer all accepted complaints alleging age discrimination to the Mediation Agency designated by the Secretary of the Department of Health and Human Services.

(b) Both the complainant and the recipient must participate in the mediation process to the extent necessary to reach an agreement or make an informed judgment that an agreement is not possible. The recipient and the complainant must meet with the mediator at least once before the OCR will accept a judgment that an agreement is not possible. The recipient and the complainant, however, need not meet with the mediator at the same time.

(c) If the complainant and the recipient reach an agreement, the mediator must prepare a written statement of the agreement and have the complainant and recipient sign it. The mediator will send a copy of the agreement to the OCR, which will take no further action on the complaint unless the complainant or the recipient fails to comply with the agreement.

(d) The mediator must protect the confidentiality of all information obtained in the course of the mediation process. No mediator may testify in any adjudicative proceeding, produce any document, or otherwise disclose any information obtained in the course of the mediation process without prior approval of the head of the agency appointing the mediator.

(e) Mediation ends after sixty (60) days from the time EPA received the complaint or if:

(1) An agreement is reached; or

(2) The Mediator determines that an agreement cannot be reached.

(f) The mediator must return unresolved complaints to OCR to be processed in accordance with the procedure in § 7.120.

[FR Doc. 2010–13470 Filed 6–3–10; 8:45 am]

BILLING CODE 6650–50–P

ENVIRONMENTAL PROTECTION AGENCY

40 CFR Part 52

[EPA–R03–OAR–2009–0957; FRL–9158–4]

Approval and Promulgation of Air Quality Implementation Plans; Maryland; Reasonable Further Progress Plan, 2002 Base Year Emission Inventory, Contingency Measures, Reasonably Available Control Measures, and Transportation Conformity Budgets for the Baltimore 1997 8-Hour Moderate Ozone Nonattainment Area

AGENCY: Environmental Protection Agency (EPA).

ACTION: Final rule.

SUMMARY: EPA is approving a revision to the Maryland State Implementation Plan (SIP) to meet the 2002 base year emissions inventory, the reasonable further progress (RFP) plan, RFP contingency measure, and reasonably available control measure (RACM) requirements of the Clean Air Act (CAA) for the Baltimore moderate 1997 8-hour ozone nonattainment area. EPA is also approving the transportation conformity motor vehicle emissions budgets (MVEBs) associated with this revision. EPA is approving the SIP revision because it satisfies the emission inventory, RFP, RACM, RFP contingency measures, and transportation conformity requirements for areas classified as moderate nonattainment for the 1997 8-hour ozone national ambient air quality standard (NAAQS) and demonstrates further progress in reducing ozone precursors. EPA is approving the SIP revision pursuant to the CAA and EPA's regulations.

DATES: *Effective Date:* This final rule is effective on July 6, 2010.

ADDRESSES: EPA has established a docket for this action under Docket ID Number EPA–R03–OAR–2009–0957. All documents in the docket are listed in the *www.regulations.gov* Web site. Although listed in the electronic docket, some information is not publicly available, i.e., confidential business information (CBI) or other information whose disclosure is restricted by statute. Certain other material, such as copyrighted material, is not placed on the Internet and will be publicly available only in hard copy form. Publicly available docket materials are available either electronically through *www.regulations.gov* or in hard copy for public inspection during normal business hours at the Air Protection Division, U.S. Environmental Protection Agency, Region III, 1650 Arch Street, Philadelphia, Pennsylvania 19103. Copies of the State submittal are available at the Maryland Department of the Environment, 1800 Washington Boulevard, Suite 705, Baltimore, Maryland, 21230.

FOR FURTHER INFORMATION CONTACT: Maria A. Pino, (215) 814–2181, or by e-mail at *pino.maria@epa.gov.*

SUPPLEMENTARY INFORMATION:

I. Background

On January 7, 2010 (75 FR 958), EPA published a notice of proposed rulemaking (NPR) for the State of Maryland. The NPR proposed approval of Maryland's 2002 base year emissions inventory, RFP plan, RFP contingency measures, RACM, and MVEBs for the Baltimore moderate 1997 8-hour ozone nonattainment area. EPA is approving the SIP revision because it satisfies the emission inventory, RFP, RACM, RFP contingency measure, and transportation conformity requirements of the section 110 and part D of the CAA and EPA's regulations. The formal SIP revision was submitted by the State of Maryland on June 4, 2007.

II. Summary of SIP Revision

The SIP revision addresses emissions inventory, RACM, RFP and contingency measures requirements for the 1997 8-hour ozone NAAQS for the Baltimore 8-hour ozone moderate nonattainment area. The SIP revision also establishes MVEBs for 2008. Other specific requirements of Maryland's June 4, 2007 SIP revision for the Baltimore 8-hour ozone nonattainment area and the rationale for EPA's proposed action are explained in the NPR and will not be restated here. No public comments were received on the NPR.

III. Final Action

EPA is approving the 2002 base year emissions inventory; the 2008 ozone projected emission inventory; the 2008 RFP plan; RFP contingency measures; RACM analysis; and 2008 transportation conformity budgets for the Baltimore 8-hour ozone nonattainment area, contained in Maryland's June 4, 2007 SIP revision submittal for the Baltimore 8-hour ozone nonattainment area. The SIP revision satisfies the requirements for 1997 8-hour ozone NAAQS nonattainment areas classified as moderate and demonstrates further progress in reducing ozone precursors.

IV. Statutory and Executive Order Reviews

A. General Requirements

Under the Clean Air Act, the Administrator is required to approve a SIP submission that complies with the provisions of the Act and applicable Federal regulations. 42 U.S.C. 7410(k); 40 CFR 52.02(a). Thus, in reviewing SIP submissions, EPA's role is to approve state choices, provided that they meet the criteria of the Clean Air Act. Accordingly, this action merely approves state law as meeting Federal requirements and does not impose additional requirements beyond those imposed by state law. For that reason, this action:

- Is not a "significant regulatory action" subject to review by the Office of Management and Budget under Executive Order 12866 (58 FR 51735, October 4, 1993);
- Does not impose an information collection burden under the provisions of the Paperwork Reduction Act (44 U.S.C. 3501 *et seq.*);
- Is certified as not having a significant economic impact on a substantial number of small entities under the Regulatory Flexibility Act (5 U.S.C. 601 *et seq.*);
- Does not contain any unfunded mandate or significantly or uniquely affect small governments, as described in the Unfunded Mandates Reform Act of 1995 (Pub. L. 104–4);
- Does not have Federalism implications as specified in Executive Order 13132 (64 FR 43255, August 10, 1999);
- Is not an economically significant regulatory action based on health or safety risks subject to Executive Order 13045 (62 FR 19885, April 23, 1997);
- Is not a significant regulatory action subject to Executive Order 13211 (66 FR 28355, May 22, 2001);
- Is not subject to requirements of Section 12(d) of the National Technology Transfer and Advancement Act of 1995 (15 U.S.C. 272 note) because application of those requirements would be inconsistent with the Clean Air Act; and
- Does not provide EPA with the discretionary authority to address, as appropriate, disproportionate human health or environmental effects, using practicable and legally permissible methods, under Executive Order 12898 (59 FR 7629, February 16, 1994).

In addition, this rule does not have tribal implications as specified by Executive Order 13175 (65 FR 67249, November 9, 2000), because the SIP is not approved to apply in Indian country located in the state, and EPA notes that it will not impose substantial direct costs on tribal governments or preempt tribal law.

B. Submission to Congress and the Comptroller General

The Congressional Review Act, 5 U.S.C. 801 *et seq.,* as added by the Small Business Regulatory Enforcement Fairness Act of 1996, generally provides that before a rule may take effect, the agency promulgating the rule must submit a rule report, which includes a copy of the rule, to each House of the Congress and to the Comptroller General of the United States. EPA will submit a report containing this action and other required information to the U.S. Senate, the U.S. House of Representatives, and the Comptroller General of the United States prior to publication of the rule in the **Federal Register.** A major rule cannot take effect until 60 days after it is published in the **Federal Register.** This action is not a "major rule" as defined by 5 U.S.C. 804(2).

C. Petitions for Judicial Review

Under section 307(b)(1) of the Clean Air Act, petitions for judicial review of this action must be filed in the United States Court of Appeals for the appropriate circuit by August 3, 2010. Filing a petition for reconsideration by the Administrator of this final rule does not affect the finality of this action for the purposes of judicial review nor does it extend the time within which a petition for judicial review may be filed, and shall not postpone the effectiveness of such rule or action. This action pertaining to the Baltimore moderate 1997 8-hour ozone nonattainment area's 2002 base year emissions inventory; 2008 ozone projected emission inventory; 2008 RFP plan; RFP contingency measures; RACM analysis; and 2008 transportation conformity budgets may not be challenged later in proceedings to enforce its requirements. (*See* section 307(b)(2).)

List of Subjects in 40 CFR Part 52

Environmental protection, Air pollution control, Incorporation by reference, Intergovernmental relations, Nitrogen dioxide, Ozone, Reporting and recordkeeping requirements, Volatile organic compounds.

Dated: May 21, 2010.

William C. Early,

Acting Regional Administrator, EPA Region III.

■ 40 CFR part 52 is amended as follows:

PART 52—[AMENDED]

■ 1. The authority citation for part 52 continues to read as follows:

Authority: 42 U.S.C. 7401 *et seq.*

Subpart V—Maryland

■ 2. In § 52.1070, the table in paragraph (e) is amended by adding at the end of the table, the entries for Reasonable Further Progress Plan (RFP), Reasonably Available Control Measures and Contingency Measures; 2002 Base Year Inventory for VOC, NO_X and CO; and 2008 RFP Transportation Conformity Budgets. The amendments read as follows:

§ 52.1070 Identification of plan.

* * * * *

(e) * * *

Name of non-regulatory SIP revision	Applicable geographic area	State submittal date	EPA approval date	Additional explanation
*	*	*	*	*
Reasonable Further Progress Plan (RFP), Reasonably Available Control Measures, and Contingency Measures.	Baltimore 1997 8-hour ozone moderate nonattainment area.	6/4/07	6/4/10 [Insert page number where the document begins]	
2002 Base Year Inventory for VOC, NO_X, and CO.	Baltimore 1997 8-hour ozone moderate nonattainment area.	6/4/07	6/4/10 [Insert page number where the document begins]	
2008 RFP Transportation Conformity Budgets.	Baltimore 1997 8-hour ozone moderate nonattainment area.	6/4/07	6/4/10 [Insert page number where the document begins]	

■ 3. Section 52.1075 is amended by revising the section heading and by adding paragraph (i) to read as follows:

§ 52.1075 Base year emissions inventory.

* * * * *

(i) EPA approves as a revision to the Maryland State Implementation Plan the 2002 base year emissions inventories for the Baltimore 1997 8-hour ozone moderate nonattainment area submitted by the Secretary of the Maryland Department of the Environment on June 4, 2007. This submittal consists of the 2002 base year point, area, non-road mobile, and on-road mobile source inventories in area for the following pollutants: Volatile organic compounds (VOC), carbon monoxide (CO) and nitrogen oxides (NO_X).

■ 4. Section 52.1076 is amended by adding paragraphs (q) and (r) to read as follow:

§ 52.1076 Control strategy plans for attainment and rate-of-progress: Ozone.

* * * * *

(q) EPA approves revisions to the Maryland State Implementation Plan consisting of the 2008 reasonable further progress (RFP) plan, reasonably available control measures, and contingency measures for the Baltimore 1997 8-hour ozone moderate nonattainment area submitted by the Secretary of the Maryland Department of the Environment on June 4, 2007.

(r) EPA approves the following 2008 RFP motor vehicle emissions budgets (MVEBs) for the Baltimore 1997 8-hour ozone moderate nonattainment area submitted by the Secretary of the Maryland Department of the Environment on June 4, 2007:

TRANSPORTATION CONFORMITY EMISSIONS BUDGETS FOR THE BALTIMORE AREA

Type of control strategy SIP	Year	VOC (TPD)	NO_X (TPD)	Effective date of adequacy determination or SIP approval
Rate of Progress Plan	2008	41.2	106.8	April 13, 2009, (74 FR 13433), published March 27, 2009.

[FR Doc. 2010–13381 Filed 6–3–10; 8:45 am]

BILLING CODE 6560–50–P

ENVIRONMENTAL PROTECTION AGENCY

40 CFR Part 52

[EPA–R03–OAR–2010–0039; FRL–9158–3]

Approval and Promulgation of Air Quality Implementation Plans; Delaware; Control of Nitrogen Oxide Emissions From Industrial Boilers and Process Heaters at Petroleum Refineries

AGENCY: Environmental Protection Agency (EPA).

ACTION: Final rule.

SUMMARY: EPA is approving a State Implementation Plan (SIP) revision submitted by the State of Delaware. This SIP revision consists of adding specific emission control requirements for controlling nitrogen oxide (NOx) emissions from industrial boilers. This action is being taken under the Clean Air Act (CAA).

DATES: *Effective Date:* This final rule is effective on July 6, 2010.

ADDRESSES: EPA has established a docket for this action under Docket ID Number EPA–R03–OAR–2010–0039. All documents in the docket are listed in the *www.regulations.gov* Web site. Although listed in the electronic docket, some information is not publicly available, i.e., confidential business information (CBI) or other information whose disclosure is restricted by statute. Certain other material, such as copyrighted material, is not placed on the Internet and will be publicly available only in hard copy form. Publicly available docket materials are available either electronically through *www.regulations.gov* or in hard copy for public inspection during normal business hours at the Air Protection Division, U.S. Environmental Protection Agency, Region III, 1650 Arch Street, Philadelphia, Pennsylvania 19103. Copies of the State submittal are available at the Delaware Department of Natural Resources & Environmental Control, 89 Kings Highway, P.O. Box 1401, Dover, Delaware 19901.

FOR FURTHER INFORMATION CONTACT: Gregory Becoat, (215) 814–2036, or by e-mail at *becoat.gregory@epa.gov.*

SUPPLEMENTARY INFORMATION:

I. Background

On March 15, 2010 (75 FR 12168), EPA published a notice of proposed rulemaking (NPR) for the State of Delaware. The NPR proposed approval of the Delaware SIP revision that adds a new section (Section 2.0) to Regulation 1142—Control of Nitrogen Oxide Emissions from Industrial Boilers and Process Heaters at Petroleum Refineries in order to require new and/or additional controls on industrial boilers and process heaters with heat input capacities of equal to or greater than 200 million British thermal units per hour (mmBTU/hr). EPA received no comments on the NPR to approve Delaware's SIP revision. The formal SIP revision was submitted by the State of Delaware on November 17, 2009.

II. Summary of SIP Revision

Regulation 1142 (formerly SIP Regulation No. 42) establishes applicability and compliance dates to any industrial boiler or process heater with a maximum heat input capacity of equal to or greater than 200 mmBTU/hr, which is operated or permitted to operate within a petroleum refinery facility (except for any Fluid Catalytic Cracking Unit carbon monoxide (CO) boiler). Regulation 1142 establishes NOx emission limitations for any industrial boiler or process heater with a maximum heat input capacity of equal to or greater than 200 mmBTU/hr, which is operated or permitted to operate within a petroleum refinery facility. The regulation also requires compliance with monitoring, recordkeeping, and reporting requirements.

III. Final Action

EPA is approving the Delaware SIP revision that adds a new section, Section 2—Control of Nitrogen Oxide Emissions from Industrial Boilers and Process Heaters at Petroleum Refineries to Delaware's Regulation 1142—Specific Emission Control Requirements for controlling NOx emissions from industrial boilers.

IV. Statutory and Executive Order Reviews

A. General Requirements

Under the CAA, the Administrator is required to approve a SIP submission that complies with the provisions of the CAA and applicable Federal regulations. 42 U.S.C. 7410(k); 40 CFR 52.02(a). Thus, in reviewing SIP submissions, EPA's role is to approve state choices, provided that they meet the criteria of the CAA. Accordingly, this action merely approves state law as meeting Federal requirements and does not

impose additional requirements beyond those imposed by state law. For that reason, this action:

- Is not a "significant regulatory action" subject to review by the Office of Management and Budget under Executive Order 12866 (58 FR 51735, October 4, 1993);
- Does not impose an information collection burden under the provisions of the Paperwork Reduction Act (44 U.S.C. 3501 *et seq.*);
- Is certified as not having a significant economic impact on a substantial number of small entities under the Regulatory Flexibility Act (5 U.S.C. 601 *et seq.*);
- Does not contain any unfunded mandate or significantly or uniquely affect small governments, as described in the Unfunded Mandates Reform Act of 1995 (Public Law 104–4);
- Does not have federalism implications as specified in Executive Order 13132 (64 FR 43255, August 10, 1999);
- Is not an economically significant regulatory action based on health or safety risks subject to Executive Order 13045 (62 FR 19885, April 23, 1997);
- Is not a significant regulatory action subject to Executive Order 13211 (66 FR 28355, May 22, 2001);
- Is not subject to requirements of Section 12(d) of the National Technology Transfer and Advancement Act of 1995 (15 U.S.C. 272 note) because application of those requirements would be inconsistent with the CAA; and
- Does not provide EPA with the discretionary authority to address, as appropriate, disproportionate human health or environmental effects, using practicable and legally permissible methods, under Executive Order 12898 (59 FR 7629, February 16, 1994).

In addition, this rule does not have tribal implications as specified by Executive Order 13175 (65 FR 67249, November 9, 2000), because the SIP is not approved to apply in Indian country located in the state, and EPA notes that it will not impose substantial direct costs on tribal governments or preempt tribal law.

B. Submission to Congress and the Comptroller General

The Congressional Review Act, 5 U.S.C. 801 *et seq.,* as added by the Small Business Regulatory Enforcement Fairness Act of 1996, generally provides that before a rule may take effect, the agency promulgating the rule must submit a rule report, which includes a copy of the rule, to each House of the Congress and to the Comptroller General of the United States. EPA will submit a report containing this action and other required information to the U.S. Senate, the U.S. House of Representatives, and the Comptroller General of the United States prior to publication of the rule in the **Federal Register.** A major rule cannot take effect until 60 days after it is published in the **Federal Register.** This action is not a "major rule" as defined by 5 U.S.C. 804(2).

C. Petitions for Judicial Review

Under section 307(b)(1) of the CAA, petitions for judicial review of this action must be filed in the United States Court of Appeals for the appropriate circuit by August 3, 2010. Filing a petition for reconsideration by the Administrator of this final rule does not affect the finality of this action for the purposes of judicial review nor does it extend the time within which a petition for judicial review may be filed, and shall not postpone the effectiveness of such rule or action.

This action, pertaining to the State of Delaware's Regulation 1142—Specific Emission Control Requirements for controlling NOx emissions from industrial boilers, may not be challenged later in proceedings to enforce its requirements. (*See* section 307(b)(2).)

List of Subjects in 40 CFR Part 52

Environmental protection, Air pollution control, Incorporation by reference, Nitrogen dioxide, Ozone, Particulate matter, Reporting and recordkeeping requirements.

Dated: May 21, 2010.

William C. Early,

Acting Regional Administrator, Region III.

■ 40 CFR part 52 is amended as follows:

PART 52—[AMENDED]

■ 1. The authority citation for part 52 continues to read as follows:

Authority: 42 U.S.C. 7401 *et seq.*

Subpart I—Delaware

■ 2. In § 52.420, the table in paragraph (c) is amended by:

■ A. Removing the title entry for Regulation No. 42—Specific Emission Control Requirements and adding in its place a title entry for Regulation 1142; and

■ B. Adding an entry for Section 2.0.

The amendments read as follows:

§ 52.420 Identification of plan.

* * * * *

(c) * * *

EPA-APPROVED REGULATIONS IN THE DELAWARE SIP

State citation	Title/subject	State effective date	EPA approval date	Additional explanation
*	*	*	*	*
Regulation 1142—Specific Emission Control Requirements (Formerly Regulation No. 42)				
Section 2.0	Specific Emission Control Requirements.	11/11/09	6/4/10 ..... [Insert page number where the document begins].	Emission limitations for any industrial boiler or process heater with a maximum heat input capacity of equal to or greater than 200 mmBTU/hr.
*	*	*	*	*

[FR Doc. 2010–13377 Filed 6–3–10; 8:45 am]
BILLING CODE 6560–50–P

ENVIRONMENTAL PROTECTION AGENCY

40 CFR Part 180

[EPA–HQ–OPP–2010–0033; FRL–8827–4]

2-Propenoic acid polymer, with 1,3-butadiene and ethenylbenzene; Tolerance Exemption

AGENCY: Environmental Protection Agency (EPA).

ACTION: Final rule.

SUMMARY: This regulation establishes an exemption from the requirement of a tolerance for residues of 2-propenoic acid polymer, with 1,3-butadiene and ethenylbenzene, minimum number average molecular weight (in AMU) 9400 (CAS Reg. No. 25085–39–6); when used as an inert ingredient in a pesticide chemical formulation under 40 CFR 180.960. BASF Corporation submitted a petition to EPA under the Federal Food, Drug, and Cosmetic Act (FFDCA), requesting an exemption from the requirement of a tolerance. This regulation eliminates the need to establish a maximum permissible level for residues of 2-propenoic acid polymer, with 1,3-butadiene and ethenylbenzene on food or feed commodities.

DATES: This regulation is effective June 4, 2010. Objections and requests for hearings must be received on or before August 3, 2010, and must be filed in accordance with the instructions provided in 40 CFR part 178 (see also Unit I.C. of the **SUPPLEMENTARY INFORMATION**).

ADDRESSES: EPA has established a docket for this action under docket identification (ID) number EPA–HQ–OPP–2010–0033. All documents in the docket are listed in the docket index available at *http://www.regulations.gov*. Although listed in the index, some information is not publicly available, e.g., Confidential Business Information (CBI) or other information whose disclosure is restricted by statute. Certain other material, such as copyrighted material, is not placed on the Internet and will be publicly available only in hard copy form. Publicly available docket materials are available in the electronic docket at *http://www.regulations.gov*, or, if only available in hard copy, at the OPP Regulatory Public Docket in Rm. S–4400, One Potomac Yard (South Bldg.), 2777 S. Crystal Dr., Arlington, VA. The Docket Facility is open from 8:30 a.m. to 4 p.m., Monday through Friday, excluding legal holidays. The Docket Facility telephone number is (703) 305–5805.

FOR FURTHER INFORMATION CONTACT: Elizabeth Fertich, Registration Division (7505P), Office of Pesticide Programs, Environmental Protection Agency, 1200 Pennsylvania Ave., NW., Washington, DC 20460–0001; telephone number: (703) 347–8560; e-mail address: *fertich.elizabeth@epa.gov*.

SUPPLEMENTARY INFORMATION:

I. General Information

A. Does this Action Apply to Me?

You may be potentially affected by this action if you are an agricultural producer, food manufacturer, or pesticide manufacturer. Potentially affected entities may include, but are not limited to:

- Crop production (NAICS code 111).
- Animal production (NAICS code 112).
- Food manufacturing (NAICS code 311).
- Pesticide manufacturing (NAICS code 32532).

This listing is not intended to be exhaustive, but rather provides a guide for readers regarding entities likely to be affected by this action. Other types of entities not listed in this unit could also be affected. The North American Industrial Classification System (NAICS) codes have been provided to assist you and others in determining whether this action might apply to certain entities. If you have any questions regarding the applicability of this action to a particular entity, consult the person listed under **FOR FURTHER INFORMATION CONTACT**.

B. How Can I Get Electronic Access to Other Related Information?

You may access a frequently updated electronic version of 40 CFR part 180 through the Government Printing Office's e-CFR site at *http://www.gpoaccess.gov/ecfr*.

C. Can I File an Objection or Hearing Request?

Under FFDCA section 408(g), 21 U.S.C. 346a, any person may file an objection to any aspect of this regulation and may also request a hearing on those objections. You must file your objection or request a hearing on this regulation in accordance with the instructions provided in 40 CFR part 178. To ensure proper receipt by EPA, you must identify docket ID number EPA–HQ–OPP–2010–0033 in the subject line on the first page of your submission. All objections and requests for a hearing must be in writing, and must be received by the Hearing Clerk on or before August 3, 2010. Addresses for mail and hand delivery of objections and hearing requests are provided in 40 CFR 178.25(b).

In addition to filing an objection or hearing request with the Hearing Clerk as described in 40 CFR part 178, please submit a copy of the filing that does not contain any CBI for inclusion in the public docket. Information not marked confidential pursuant to 40 CFR part 2 may be disclosed publicly by EPA without prior notice. Submit a copy of your non-CBI objection or hearing request, identified by docket ID number EPA–HQ–OPP–2010–0033, by one of the following methods.

- *Federal eRulemaking Portal*: *http://www.regulations.gov*. Follow the on-line instructions for submitting comments.
- *Mail*: Office of Pesticide Programs (OPP) Regulatory Public Docket (7502P), Environmental Protection Agency, 1200 Pennsylvania Ave., NW., Washington, DC 20460–0001.
- *Delivery*: OPP Regulatory Public Docket (7502P), Environmental Protection Agency, Rm. S–4400, One Potomac Yard (South Bldg.), 2777 S. Crystal Dr., Arlington, VA. Deliveries are only accepted during the Docket Facility's normal hours of operation (8:30 a.m. to 4 p.m., Monday through Friday, excluding legal holidays). Special arrangements should be made for deliveries of boxed information. The Docket Facility telephone number is (703) 305–5805.

II. Background and Statutory Findings

In the **Federal Register** of March 19, 2010 (75 FR 13277) (FRL–8813–2), EPA issued a notice pursuant to section 408 of FFDCA, 21 U.S.C. 346a, announcing the receipt of a pesticide petition (PP 9E7649) filed by BASF Corporation, 100 Campus Drive, Florham Park, NJ 07932. The petition requested that 40 CFR 180.960 be amended by establishing an exemption from the requirement of a tolerance for residues of 2-propenoic acid polymer, with 1,3-butadiene and ethenylbenzene, minimum number average molecular weight (in AMU) 9400; CAS Reg. No. 25085-39-6. That notice included a summary of the petition prepared by the petitioner and solicited comments on the petitioner's request. The Agency did not receive any comments in the docket. However, the Agency did receive one comment by e-mail. The comment was received from a private citizen who opposed the authorization to sell any pesticide that leaves a residue on food. The Agency understands the commenter's concerns

and recognizes that some individuals believe that no residue of pesticides should be allowed. However, under the existing legal framework provided by section 408 of the Federal Food, Drug and Cosmetic Act (FFDCA) EPA is authorized to establish pesticide tolerances or exemptions where persons seeking such tolerances or exemptions have demonstrated that the pesticide meets the safety standard imposed by the statute.

Section 408(c)(2)(A)(i) of FFDCA allows EPA to establish an exemption from the requirement for a tolerance (the legal limit for a pesticide chemical residue in or on a food) only if EPA determines that the exemption is "safe." Section 408(c)(2)(A)(ii) of FFDCA defines "safe" to mean that "there is a reasonable certainty that no harm will result from aggregate exposure to the pesticide chemical residue, including all anticipated dietary exposures and all other exposures for which there is reliable information." This includes exposure through drinking water and use in residential settings, but does not include occupational exposure. Section 408(b)(2)(C) of FFDCA requires EPA to give special consideration to exposure of infants and children to the pesticide chemical residue in establishing an exemption from the requirement of a tolerance and to "ensure that there is a reasonable certainty that no harm will result to infants and children from aggregate exposure to the pesticide chemical residue..." and specifies factors EPA is to consider in establishing an exemption.

III. Risk Assessment and Statutory Findings

EPA establishes exemptions from the requirement of a tolerance only in those cases where it can be shown that the risks from aggregate exposure to pesticide chemical residues under reasonably foreseeable circumstances will pose no appreciable risks to human health. In order to determine the risks from aggregate exposure to pesticide inert ingredients, the Agency considers the toxicity of the inert in conjunction with possible exposure to residues of the inert ingredient through food, drinking water, and through other exposures that occur as a result of pesticide use in residential settings. If EPA is able to determine that a finite tolerance is not necessary to ensure that there is a reasonable certainty that no harm will result from aggregate exposure to the inert ingredient, an exemption from the requirement of a tolerance may be established.

Consistent with FFDCA section 408(b)(2)(D), EPA has reviewed the available scientific data and other relevant information in support of this action and considered its validity, completeness and reliability and the relationship of this information to human risk. EPA has also considered available information concerning the variability of the sensitivities of major identifiable subgroups of consumers, including infants and children. In the case of certain chemical substances that are defined as polymers, the Agency has established a set of criteria to identify categories of polymers expected to present minimal or no risk. The definition of a polymer is given in 40 CFR 723.250(b) and the exclusion criteria for identifying these low-risk polymers are described in 40 CFR 723.250(d). 2-propenoic acid polymer, with 1,3-butadiene and ethenylbenzene conforms to the definition of a polymer given in 40 CFR 723.250(b) and meets the following criteria that are used to identify low-risk polymers.

1. The polymer is not a cationic polymer nor is it reasonably anticipated to become a cationic polymer in a natural aquatic environment.
2. The polymer does contain as an integral part of its composition the atomic elements carbon, hydrogen, and oxygen.
3. The polymer does not contain as an integral part of its composition, except as impurities, any element other than those listed in 40 CFR 723.250(d)(2)(ii).
4. The polymer is neither designed nor can it be reasonably anticipated to substantially degrade, decompose, or depolymerize.
5. The polymer is manufactured or imported from monomers and/or reactants that are already included on the TSCA Chemical Substance Inventory or manufactured under an applicable TSCA section 5 exemption.
6. The polymer is not a water absorbing polymer with a number average molecular weight (MW) greater than or equal to 10,000 daltons.

Additionally, the polymer also meets as required the following exemption criteria specified in 40 CFR 723.250(e).

7. The polymer's number average MW of 9400 is greater than 1,000 and less than 10,000 daltons. The polymer contains less than 10% oligomeric material below MW 500 and less than 25% oligomeric material below MW 1,000, and the polymer does not contain any reactive functional groups.

Thus, 2-propenoic acid polymer, with 1,3-butadiene and ethenylbenzene meets the criteria for a polymer to be considered low risk under 40 CFR 723.250. Based on its conformance to the criteria in this unit, no mammalian toxicity is anticipated from dietary, inhalation, or dermal exposure to 2-propenoic acid polymer, with 1,3-butadiene and ethenylbenzene.

IV. Aggregate Exposures

For the purposes of assessing potential exposure under this exemption, EPA considered that 2-propenoic acid polymer, with 1,3-butadiene and ethenylbenzene could be present in all raw and processed agricultural commodities and drinking water, and that non-occupational non-dietary exposure was possible. The number average MW of 2-propenoic acid polymer, with 1,3-butadiene and ethenylbenzene is 9400 daltons. Generally, a polymer of this size would be poorly absorbed through the intact gastrointestinal tract or through intact human skin. Since 2-propenoic acid polymer, with 1,3-butadiene and ethenylbenzene conform to the criteria that identify a low-risk polymer, there are no concerns for risks associated with any potential exposure scenarios that are reasonably foreseeable. The Agency has determined that a tolerance is not necessary to protect the public health.

V. Cumulative Effects From Substances With a Common Mechanism of Toxicity

Section 408(b)(2)(D)(v) of FFDCA requires that, when considering whether to establish, modify, or revoke a tolerance, the Agency consider "available information" concerning the cumulative effects of a particular pesticide's residues and "other substances that have a common mechanism of toxicity."

EPA has not found 2-propenoic acid polymer, with 1,3-butadiene and ethenylbenzene to share a common mechanism of toxicity with any other substances, and 2-propenoic acid polymer, with 1,3-butadiene and ethenylbenzene does not appear to produce a toxic metabolite produced by other substances. For the purposes of this tolerance action, therefore, EPA has assumed that 2-propenoic acid polymer, with 1,3-butadiene and ethenylbenzene does not have a common mechanism of toxicity with other substances. For information regarding EPA's efforts to determine which chemicals have a common mechanism of toxicity and to evaluate the cumulative effects of such chemicals, see EPA's website at *http://www.epa.gov/pesticides/cumulative*.

VI. Additional Safety Factor for the Protection of Infants and Children

Section 408(b)(2)(C) of FFDCA provides that EPA shall apply an additional tenfold margin of safety for infants and children in the case of threshold effects to account for prenatal

and postnatal toxicity and the completeness of the data base unless EPA concludes that a different margin of safety will be safe for infants and children. Due to the expected low toxicity of 2-propenoic acid polymer, with 1,3-butadiene and ethenylbenzene, EPA has not used a safety factor analysis to assess the risk. For the same reasons the additional tenfold safety factor is unnecessary.

VII. Determination of Safety

Based on the conformance to the criteria used to identify a low-risk polymer, EPA concludes that there is a reasonable certainty of no harm to the U.S. population, including infants and children, from aggregate exposure to residues of 2-propenoic acid polymer, with 1,3-butadiene and ethenylbenzene.

VIII. Other Considerations

A. Analytical Enforcement Methodology

An analytical method is not required for enforcement purposes since the Agency is establishing an exemption from the requirement of a tolerance without any numerical limitation.

B. International Residue Limits

In making its tolerance decisions, EPA seeks to harmonize U.S. tolerances with international standards whenever possible, consistent with U.S. food safety standards and agricultural practices. EPA considers the international maximum residue limits (MRLs) established by the Codex Alimentarius Commission (Codex), as required by FFDCA section 408(b)(4). The Codex Alimentarius is a joint U.N. Food and Agriculture Organization/World Health Organization food standards program, and it is recognized as an international food safety standards-setting organization in trade agreements to which the United States is a party. EPA may establish a tolerance that is different from a Codex MRL; however, FFDCA section 408(b)(4) requires that EPA explain the reasons for departing from the Codex level.

The Codex has not established a MRL for 2-propenoic acid polymer, with 1,3-butadiene and ethenylbenzene.

IX. Conclusion

Accordingly, EPA finds that exempting residues of 2-propenoic acid polymer, with 1,3-butadiene and ethenylbenzene from the requirement of a tolerance will be safe.

X. Statutory and Executive Order Reviews

This final rule establishes a tolerance under section 408(d) of FFDCA in response to a petition submitted to the Agency. The Office of Management and Budget (OMB) has exempted these rules from review under Executive Order 12866, entitled *Regulatory Planning and Review* (58 FR 51735, October 4, 1993). Because this final rule has been exempted from review under Executive Order 12866, this final rule is not subject to Executive Order 13211, entitled *Actions Concerning Regulations That Significantly Affect Energy Supply, Distribution, or Use* (66 FR 28355, May 22, 2001) or Executive Order 13045, entitled *Protection of Children from Environmental Health Risks and Safety Risks* (62 FR 19885, April 23, 1997). This final rule does not contain any information collections subject to OMB approval under the Paperwork Reduction Act (PRA), 44 U.S.C. 3501 *et seq.*, nor does it involve any technical standards that would require Agency consideration of voluntary consensus standards pursuant to section 12(d) of the National Technology Transfer and Advancement Act of 1995 (NTTAA), Public Law 104–113, section 12(d) (15 U.S.C. 272 note).

Since tolerances and exemptions that are established on the basis of a petition under section 408(d) of FFDCA, such as the tolerance in this final rule, do not require the issuance of a proposed rule, the requirements of the Regulatory Flexibility Act (RFA) (5 U.S.C. 601 *et seq.*) do not apply.

This final rule directly regulates growers, food processors, food handlers, and food retailers, not States or tribes, nor does this action alter the relationships or distribution of power and responsibilities established by Congress in the preemption provisions of section 408(n)(4) of FFDCA. As such, the Agency has determined that this action will not have a substantial direct effect on States or tribal governments, on the relationship between the national government and the States or tribal governments, or on the distribution of power and responsibilities among the various levels of government or between the Federal Government and Indian tribes, or otherwise have any unique impacts on local governments. Thus, the Agency has determined that Executive Order 13132, entitled *Federalism* (64 FR 43255, August 10, 1999) and Executive Order 13175, entitled *Consultation and Coordination with Indian Tribal Governments* (65 FR 67249, November 9, 2000) do not apply to this final rule. In addition, this final rule does not impose any enforceable duty or contain any unfunded mandate as described under Title II of the Unfunded Mandates Reform Act of 1995 (UMRA) (Public Law 104–4).

Although this action does not require any special considerations under Executive Order 12898, entitled *Federal Actions to Address Environmental Justice in Minority Populations and Low-Income Populations* (59 FR 7629, February 16, 1994), EPA seeks to achieve environmental justice, the fair treatment and meaningful involvement of any group, including minority and/or low-income populations, in the development, implementation, and enforcement of environmental laws, regulations, and policies. As such, to the extent that information is publicly available or was submitted in comments to EPA, the Agency considered whether groups or segments of the population, as a result of their location, cultural practices, or other factors, may have atypical or disproportionately high and adverse human health impacts or environmental effects from exposure to the pesticide discussed in this document, compared to the general population.

XI. Congressional Review Act

The Congressional Review Act, 5 U.S.C. 801 *et seq.*, generally provides that before a rule may take effect, the agency promulgating the rule must submit a rule report to each House of the Congress and to the Comptroller General of the United States. EPA will submit a report containing this rule and other required information to the U.S. Senate, the U.S. House of Representatives, and the Comptroller General of the United States prior to publication of this rule in the **Federal Register**. This rule is not a "major rule" as defined by 5 U.S.C. 804(2).

List of Subjects in 40 CFR Part 180

Environmental protection, Administrative practice and procedure, Agricultural commodities, Pesticides and pests, Reporting and recordkeeping requirements.

Dated: May 24, 2010.

Daniel Rosenblatt,

Director, Registration Division, Office of Pesticide Programs.

■ Therefore, 40 CFR chapter I is amended as follows:

PART 180—[AMENDED]

■ 1. The authority citation for part 180 continues to read as follows:

Authority: 21 U.S.C. 321(q), 346a and 371.

■ 2. In §180.960, the table is amended by adding alphabetically the following polymer to read as follows:

§ 180.960 Polymers; exemptions from the requirement of a tolerance.

* * * * *

Polymer	CAS No.
2-propenoic acid polymer, with 1,3-butadiene and ethenylbenzene, minimum number average molecular weight (in amu), 9400	25085-39-6

* * * * *

[FR Doc. 2010–13320 Filed 6–3–10; 8:45 am]

BILLING CODE 6560–50–S

ENVIRONMENTAL PROTECTION AGENCY

40 CFR Parts 260, 261, 262, 263, 264, 265, 266, 268, and 270

[EPA–RCRA–2008–0678; FRL–9158–5]

RIN 2050–AG52

Hazardous Waste Technical Corrections and Clarifications Rule

AGENCY: Environmental Protection Agency (EPA).

ACTION: Partial withdrawal of direct final rule.

SUMMARY: On March 18, 2010, EPA published in the **Federal Register** a Direct Final rule entitled, *Hazardous Waste Technical Corrections and Clarifications Rule* (75 FR 12989). This Direct Final rule included a number of specific technical changes to correct or clarify several parts of the Resource Conservation and Recovery Act (RCRA) hazardous waste regulations. At the same time, EPA also published a parallel Proposed Rule (75 FR 13006) for the same changes. EPA received adverse comment on four of the specific amendments and thus is withdrawing them. The four amendments being withdrawn are: 40 CFR 262.34(a); 40 CFR 262.34(a)(2); 40 CFR 262.34(a)(5), and 40 CFR 266.20(b). As a result of withdrawing the amendment at 40 CFR 262.34(a)(5), we also are withdrawing the related amendment at 40 CFR 262.34(a)(1)(iv)(B). Finally, because of a typographical error, we also are withdrawing the amendment to the entry "K107" in the table at 40 CFR 261.32(a).

DATES: On June 16, 2010, all amendments go into effect that were published in the **Federal Register** at 75 FR 12989 on March 18, 2010, except the following: The amendment to the entry "K107" in the table at 40 CFR 261.32(a); the amendment to 40 CFR 262.34(a); the amendment to 40 CFR 262.34(a)(1)(iv)(B); the amendment to 40 CFR 262.34(a)(2); the amendment to 40 CFR 262.34(a)(5), and the amendment at 40 CFR 266.20(b) which are withdrawn effective June 4, 2010.

FOR FURTHER INFORMATION CONTACT: Jim O'Leary, U.S. Environmental Protection Agency, Office of Resource Conservation and Recovery (MC:5304P), 1200 Pennsylvania Avenue, NW., Washington, DC 20460, *Phone:* (703) 308–8827; or *e-mail: oleary.jim@epa.gov.*

SUPPLEMENTARY INFORMATION: On March 18, 2010, EPA published in the **Federal Register** a Direct Final rule entitled, *Hazardous Waste Technical Corrections and Clarifications Rule* (75 FR 12989). This Direct Final rule included a number of specific technical changes to correct or clarify several parts of the Resource Conservation and Recovery Act (RCRA) hazardous waste regulations. At the same time, EPA also published a parallel Proposed Rule (75 FR 13006) for the same changes.

We stated in that Direct Final rule that if we received adverse comment on any amendments by May 3, 2010, the affected amendments in the Direct Final rule would not take effect and we would publish a timely withdrawal in the **Federal Register** of those specific amendments. We subsequently received adverse comment on four specific amendments:

- 40 CFR 262.34(a) related to the hazardous waste accumulation time for large quantity generators;
- 40 CFR 262.34(a)(2) related to the date upon which each period of accumulation begins must be clearly marked and visible for inspection on each container and tank;
- 40 CFR 262.34(a)(5) related to the closure requirements for tanks, containers, drip pads and containment buildings
- 40 CFR 266.20(b) related to recyclable materials used in a manner constituting disposal.

Because EPA received adverse comment on these four amendments, we are withdrawing them.

As a result of withdrawing 40 CFR 262.34(a)(5), the related amendment at 40 CFR 262.34(a)(1)(iv)(B) must also be withdrawn because the Agency had deleted the latter part of this particular regulatory citation in the Direct Final rule in an effort to clarify the closure requirements for tanks, containers, drip pads and containment buildings. Also, there was a typographical error related to the entry for EPA hazardous waste No. K107 in the table at 40 CFR 261.32(a). We therefore are withdrawing this amendment as well. Thus, we are withdrawing six of the original amendments from the March 18, 2010 Direct Final rule.

EPA published a parallel Proposed Rule on the same day as the Direct Final rule (75 FR 13006). The Proposed Rule invited comment on the substance of the Direct Final rule. We intend to review the adverse comments we received with respect to the amendments at 40 CFR 262.34(a), 40 CFR 262.34(a)(1)(iv)(B), 40 CFR 262.34(a)(2), 40 CFR 262.34(a)(5), and 40 CFR 266.20(b) to determine the appropriate course of action for each amendment. With respect to the typographical error in the amendment to the entry for EPA hazardous waste No. K107 in the table at 40 CFR 261.32(a), we intend to publish a final rulemaking that will correct this mistake. As stated in the parallel proposal, we will not institute a second comment period on these proposed actions.

The amendments for which we did not receive adverse comment will become effective on June 16, 2010, as provided in the March 18, 2010, Direct Final rule.

Effective Dates

Because there may be some confusion about the effective dates for the amendments in the Final *Hazardous Waste Technical Corrections and Clarifications Rule* (75 FR 12989) which are not being withdrawn and which go into effect on June 16, 2010, EPA is here providing further explanation for the three types of amendments in the Final Rule. The three types of amendments result from the fact that the amendments are promulgated in part under the authority of the Hazardous and Solid Waste Amendments of 1984 (HSWA), and in part under non-HSWA RCRA authority. In addition, some amendments are jointly promulgated under the authority of the Hazardous Materials Transportation Act (HMTA).

First, the following amendments to the manifest regulations are promulgated under non-HSWA RCRA authority and the authority of the Hazardous Materials Transportation Act:

- 40 CFR 262.23,
- 40 CFR 262.41, and
- 40 CFR 262.42, and
- 40 CFR 262.60(b).

These non-HSWA manifest amendments will be implemented under RCRA authority on the effective date only in those states that do not have final authorization of their base RCRA programs. These changes will not therefore be implemented and enforced *under RCRA authority* in authorized states until the authorized states have revised their programs and received authorization for these program revisions. However, because these hazardous waste manifest requirements

are jointly promulgated by EPA under RCRA authority and the Department of Transportation (DOT) under the federal hazardous materials transportation laws, the manifest changes will be applicable federally in all states *under the authority of the Hazardous Materials Transportation Act (HMTA)* on the effective date. All states will be required to adopt these amendments in accordance with the consistency requirements in 40 CFR 271.4(c). (*See* 70 FR 10810–10811, March 4, 2005 for a further discussion of the effects of DOT hazardous materials law, RCRA consistency requirements, and state authorization on the implementation of the manifest.)

Second, the following amendments are promulgated under the authority of HSWA and, because they are not more stringent, they will be effective on June 16, 2010, in states that are not currently authorized for the section being amended:

- All amendments to regulations in 40 CFR Part 268,
- 40 CFR 264.552, and
- 40 CFR 266.101.

Third, all other amendments in the *Hazardous Waste Technical Corrections and Clarifications Rule* which are not withdrawn and go into effect on June 16, 2010, are promulgated under non-HSWA RCRA authority. These non-HSWA amendments will be applicable on the effective date only in those states that do not have final authorization of their base RCRA programs.

Authorized states are required to modify their programs only when EPA promulgates federal regulations that are more stringent or broader in scope than the authorized state regulations. For those changes that are less stringent or reduce the scope of the federal program, states are not required to modify their program. This is a result of section 3009 of RCRA, which allows states to impose more stringent regulations than the federal program. The *Hazardous Waste Technical Corrections and Clarifications Rule* is considered to be neither more nor less stringent than the current standards. Therefore, authorized states, while not required to modify their programs to adopt the second and third types of technical corrections discussed above are strongly urged to adopt these technical corrections to avoid any confusion or misunderstanding by the regulated community and the public.

List of Subjects

40 CFR Part 260

Environmental protection, Administrative practice and procedure, Confidential business information, Hazardous waste, Reporting and recordkeeping requirements.

40 CFR Part 261

Environmental protection, Hazardous waste, Recycling, Reporting and recordkeeping requirements.

40 CFR Part 262

Environmental protection, Exports, Hazardous materials transportation, Hazardous waste, Imports, Labeling, Packaging and containers, Reporting and recordkeeping requirements.

40 CFR Part 263

Environmental protection, Hazardous materials transportation, Hazardous waste, Reporting and recordkeeping requirements.

40 CFR Part 264

Environmental protection, Air pollution control, Hazardous waste, Insurance, Packaging and containers, Reporting and recordkeeping requirements, Security measures, Surety bonds.

40 CFR Part 265

Environmental protection, Air pollution control, Hazardous waste, Insurance, Packaging and containers, Reporting and recordkeeping requirements, Security measures, Surety bonds, Water supply.

40 CFR Part 266

Environmental protection, Energy, Hazardous waste, Recycling, Reporting and recordkeeping requirements.

40 CFR Part 268

Environmental protection, Hazardous waste, Reporting and recordkeeping requirements.

40 CFR Part 270

Environmental protection, Administrative practice and procedure, Confidential business information, Hazardous materials transportation, Hazardous waste, Reporting and recordkeeping requirements, Water pollution control, Water supply.

Dated: May 27, 2010.

Mathy Stanislaus,

Assistant Administrator, Office of Solid Waste and Emergency Response.

Accordingly, EPA withdraws the amendment to the entry "K107" in the table 40 CFR 261.32(a), the amendment at 40 CFR 262.34(a), the amendment at 40 CFR 262.34(a)(1)(iv)(B), the amendment at 40 CFR 262.34(a)(2), the amendment at 40 CFR 262.34(a)(5), and the amendment at 40 CFR 266.20(b) published in the **Federal Register** on March 18, 2010 (75 FR 12989).

[FR Doc. 2010–13376 Filed 6–3–10; 8:45 am]

BILLING CODE 6560–50–P

DEPARTMENT OF COMMERCE

National Oceanic and Atmospheric Administration

50 CFR Part 679

[Docket No. 0910131363–0087–02]

RIN 0648–XW75

Fisheries of the Exclusive Economic Zone Off Alaska; Pacific Cod for American Fisheries Act Catcher Processors Using Trawl Gear in the Bering Sea and Aleutian Islands Management Area

AGENCY: National Marine Fisheries Service (NMFS), National Oceanic and Atmospheric Administration (NOAA), Commerce.

ACTION: Temporary rule; closure.

SUMMARY: NMFS is prohibiting directed fishing for Pacific cod by American Fisheries Act (AFA) trawl catcher processors in the Bering Sea and Aleutian Islands management area (BSAI). This action is necessary as the 2010 Pacific cod directed fishing allowance for AFA trawl catcher processors in the BSAI has been reached.

DATES: Effective 1200 hrs, Alaska local time (A.l.t.), June 10, 2010, through 2400 hrs, A.l.t., December 31, 2010.

FOR FURTHER INFORMATION CONTACT: Obren Davis, 907–586–7228.

SUPPLEMENTARY INFORMATION: NMFS manages the groundfish fishery in the BSAI exclusive economic zone according to the Fishery Management Plan for Groundfish of the Bering Sea and Aleutian Islands Management Area (FMP) prepared by the North Pacific Fishery Management Council under authority of the Magnuson-Stevens Fishery Conservation and Management Act. Regulations governing fishing by U.S. vessels in accordance with the FMP appear at subpart H of 50 CFR part 600 and 50 CFR part 679.

The 2010 Pacific cod total allowable catch (TAC) allocated to AFA trawl catcher processors in the BSAI is 3,467 metric tons (mt) as established by the final 2010 and 2011 harvest specifications for groundfish in the BSAI (75 FR 11778, March 12, 2010).

In accordance with § 679.20(d)(1)(i), the Administrator, Alaska Region, NMFS (Regional Administrator), has

determined that the 2010 Pacific cod TAC allocated to AFA trawl catcher processors in the BSAI will be taken as incidental catch by AFA trawl catcher processors in directed fisheries for other groundfish species. Therefore, the Regional Administrator is establishing a directed fishing allowance of 0 mt and in accordance with § 679.20(d)(1)(iii), finds that this directed fishing allowance has been reached. Consequently, NMFS is prohibiting directed fishing for Pacific cod by AFA trawl catcher processors in the BSAI.

After the effective date of this closure the maximum retainable amounts at § 679.20(e) and (f) apply at any time during a trip.

Classification

This action responds to the best available information recently obtained from the fishery. The Assistant Administrator for Fisheries, NOAA, (AA), finds good cause to waive the requirement to provide prior notice and opportunity for public comment pursuant to the authority set forth at 5 U.S.C. 553(b)(B) as such requirement is impracticable and contrary to the public interest. This requirement is impracticable and contrary to the public interest as it would prevent NMFS from responding to the most recent fisheries data in a timely fashion and would delay the closure of Pacific cod by AFA trawl catcher processors in the BSAI. NMFS was unable to publish a notice providing time for public comment because the most recent, relevant data only became available as of May 27, 2010.

The AA also finds good cause to waive the 30–day delay in the effective date of this action under 5 U.S.C. 553(d)(3). This finding is based upon the reasons provided above for waiver of prior notice and opportunity for public comment.

This action is required by § 679.20 and is exempt from review under Executive Order 12866.

Authority: 16 U.S.C. 1801 *et seq.*

Dated: May 28, 2010.

Carrie Selberg,

Acting Director, Office of Sustainable Fisheries, National Marine Fisheries Service.

[FR Doc. 2010–13493 Filed 6–3–10; 8:45 am]

BILLING CODE 3510–22–S

Proposed Rules

Federal Register
Vol. 75, No. 107
Friday, June 4, 2010

This section of the FEDERAL REGISTER contains notices to the public of the proposed issuance of rules and regulations. The purpose of these notices is to give interested persons an opportunity to participate in the rule making prior to the adoption of the final rules.

DEPARTMENT OF AGRICULTURE

Agricultural Marketing Service

7 CFR Part 930

[Docket No. AO–370–A8; AMS–FV–06–0213; FV07–930–2]

Tart Cherries Grown in the States of Michigan, New York, Pennsylvania, Oregon, Utah, Washington, and Wisconsin; Recommended Decision on Proposed Amendment of Marketing Agreement and Order No. 930

AGENCY: Agricultural Marketing Service, USDA.

ACTION: Proposed rule and opportunity to file exceptions.

SUMMARY: This recommended decision invites written exceptions to proposed amendments to Marketing Agreement and Order No. 930 (order), which regulates the handling of tart cherries grown in Michigan, New York, Pennsylvania, Oregon, Utah, Washington, and Wisconsin. Seven amendments were proposed by the Cherry Industry Administrative Board (Board), which is responsible for local administration of the order. These proposed amendments would: Authorize changing the primary reserve capacity associated with the volume control provisions of the order; authorize establishment of a minimum inventory level at which all remaining product held in reserves would be released to handlers for use as free tonnage; establish an age limitation on product placed into reserves; revise the nomination and election process for handler members on the Board; revise Board membership affiliation requirements; and update order language to more accurately reflect grower and handler participation in the nomination and election process in districts with only one Board representative. In addition, the Agricultural Marketing Service (AMS) proposed to make any such changes as may be necessary to the order to conform to any amendment that may result from the hearing.

This decision does not recommend the Board proposal to revise the voting requirements necessary to approve a Board action.

The proposals are designed to provide flexibility in administering the volume control provisions of the order and to update Board nomination, election, and membership requirements. The proposed amendments are intended to improve the operation and administration of the order.

DATES: Written exceptions must be filed by July 6, 2010.

ADDRESSES: Written exceptions should be filed with the Hearing Clerk, U.S. Department of Agriculture, room 1031–S, Washington, DC 20250–9200, Fax: (202) 720–9776 or via the internet at *http://www.regulations.gov,* or to Martin Engeler at the E-mail address provided in the **FOR FURTHER INFORMATION CONTACT** section. All comments should reference the docket number and the date and page number of this issue of the **Federal Register.** Comments will be made available for public inspection in the Office of the Hearing Clerk during regular business hours, or can be viewed at: *http://www.regulations.gov.*

All comments submitted in response to this rule will be included in the record and will be made available to the public. Please be advised that the identity of the individuals or entities submitting the comments will be made public on the Internet at the address provided above.

FOR FURTHER INFORMATION CONTACT: Martin Engeler, Marketing Order Administration Branch, Fruit and Vegetable Programs, AMS, USDA, 2202 Monterey Street, Suite 102–B, Fresno, California 93721; telephone: (559) 487–5110, Fax: (559) 487–5906; or Marc McFetridge, Marketing Order Administration Branch, Fruit and Vegetable Programs, AMS, USDA, 1400 Independence Avenue, SW., Stop 0237, Washington, DC 20250–0237; telephone: (202) 720–1509, Fax: (202) 720–8938, or E-mail: *Martin.Engeler@usda.gov* or *Marc.McFetridge@usda.gov.*

Small businesses may request information on this proceeding by contacting Jay Guerber, Marketing Order Administration Branch, Fruit and Vegetable Programs, AMS, USDA, 1400 Independence Avenue SW., Stop 0237, Washington, DC 20250–0237; Telephone: (202) 720–2491, Fax: (202) 720–8938, E-mail: *Jay.Guerber@usda.gov.*

SUPPLEMENTARY INFORMATION: Prior document in this proceeding: Notice of Hearing issued on February 5, 2007, and published in the February 7, 2007, issue of the **Federal Register** (72 FR 5646).

This action is governed by the provisions of sections 556 and 557 of title 5 of the United States Code and is therefore excluded from the requirements of Executive Order 12866.

Preliminary Statement

Notice is hereby given of the filing with the Hearing Clerk of this recommended decision with respect to the proposed amendments to Marketing Order 930 regulating the handling of tart cherries grown in Michigan, New York, Pennsylvania, Oregon, Utah, Washington, and Wisconsin, and the opportunity to file written exceptions thereto. Copies of this decision can be obtained from Martin Engeler whose address is listed above.

This recommended decision is issued pursuant to the provisions of the Agricultural Marketing Agreement Act of 1937, as amended (7 U.S.C. 601 *et seq.*), hereinafter referred to as the "Act", and the applicable rules of practice and procedure governing the formulation of marketing agreements and orders (7 CFR Part 900).

The proposed amendments are based on the record of public hearings held February 21 and 22, 2007, in Grand Rapids, Michigan and March 1 and 2, 2007, in Provo Utah. Notice of this hearing was published in the **Federal Register** on February 7, 2007 (72 FR 5646). The notice of hearing contained proposals submitted by the Board.

The proposed amendments were recommended by the Board and initially submitted to AMS on December 16, 2005. Additional information was submitted in June 2006 at the request of AMS and a determination was subsequently made to schedule this matter for hearing.

The proposed amendments to the order recommended by the Board are summarized below.

1. Amend § 930.50 of the order to authorize changing the primary reserve capacity associated with the volume control provisions of the order.

2. Amend § 930.54 of the order to authorize establishment of a minimum

inventory level at which all remaining product held in reserves would be released to handlers for use as free tonnage.

3. Amend § 930.55 to establish an age limitation on product placed into reserves.

4. Amend § 930.32 to revise the voting requirements necessary to approve a Board action.

5. Amend § 930.23 to revise the nomination and election process for handler members on the Board;

6. Amend § 930.20 to revise Board membership affiliation requirements.

7. Amend § 930.23 to update order language to more accurately reflect grower and handler participation in the nomination and election process in Districts with only one Board representative.

In addition to the proposed amendments to the order, AMS proposes the following:

8. To make any such changes as may be necessary to the order to conform to any amendments that may result from the hearing.

One amendment proposed by the Board is not being recommended for adoption and is discussed in this decision.

Twenty-one industry witnesses testified at the hearing. These witnesses consisted of tart cherry producers and handlers in the production area, and Board staff. The majority of the witnesses testified in favor of the proposed amendments, while some were opposed to various proposals.

At the conclusion of the hearing, the Administrative Law Judge established a deadline of May 30, 2007, for interested persons to file proposed findings and conclusions or written arguments and briefs based on the evidence received at the hearing. Two briefs were filed. One was in support of all the proposed amendments and one was opposed to most of the proposals.

Material Issues

The material issues presented on the record of hearing are as follows:

(1) Whether to amend the order to authorize changing the primary reserve capacity through informal rulemaking;

(2) Whether to amend the order to authorize establishment of a minimum inventory level at which all remaining product held in reserves would be released to handlers for use as free tonnage;

(3) Whether to amend the order to establish an age limitation on product placed into reserves;

(4) Whether to amend the order to revise the voting requirements necessary to approve a Board action;

(5) Whether to amend the order to revise the nomination and election process for handler members on the Board;

(6) Whether to amend the order to revise Board membership affiliation requirements; and

(7) Whether to amend order language regarding the nomination and election process in districts with only one Board representative.

Findings and Conclusions

The following findings and conclusions on the material issues are based on evidence presented at the hearing and the record thereof.

Material Issue Number 1—Authority To Change the Primary Reserve Capacity

The order should be amended to authorize changing the primary reserve capacity through the informal rulemaking process rather than the formal rulemaking process. Such a change could occur no more than once per crop year, and a recommendation from the Board to USDA to make such a change must be made by September 30 of the preceding crop year. Any change made to the reserve capacity would remain in effect until further modified. Prior to making a recommendation to change the reserve capacity, the Board should consider appropriate factors when making such a recommendation.

Section 930.50 of the order specifies procedures concerning establishment of volume control in the form of free and restricted percentages applied to the cherries handlers acquire from growers in a given crop year. Applying the free percentage to the cherries acquired by handlers results in a quantity of free tonnage cherries, and applying the restricted percentage results in a quantity of restricted cherries applicable to regulated handlers. Free tonnage cherries may be disposed of by handlers in any market outlet. Restricted cherries may be released to handlers for market expansion opportunities or to augment supplies in free market outlets. They may also be disposed of in certain outlets not competitive with normal market outlets, according to procedures specified in the order.

Section 930.50(i) provides for the establishment of a primary reserve and a secondary reserve. The first 50-million pounds of reserve established by applying the reserve percentages to the aggregate quantity of cherries acquired by handlers is placed in a primary reserve. Any reserve cherries in excess of the 50-million-pound limitation, or cap, are placed into a secondary reserve. Product from the secondary reserve cannot be released until all cherries in any primary reserve have been released. Currently, formal rulemaking is required to change the 50-million-pound cap on the primary reserve.

The Board proposed amending the order to authorize changing the 50-million-pound limitation on the primary reserve through the informal rulemaking process rather than through the formal rulemaking process, as is currently required. Under the proposal, a change to the reserve cap could not be made more than once per year, and a recommendation from the Board to make such a change must be made prior to September 30 of the preceding crop year.

Witnesses testified that the proposed amendment is primarily procedural in nature, and would add flexibility to the order. They testified that the current process needed to change the reserve limitation (formal rulemaking) is lengthier than the informal rulemaking process. Witnesses indicated that if this amendment is adopted it would provide a more efficient and timely process for changing the reserve capacity. Witnesses testified that the cap could be either increased or decreased through this process.

Witnesses testified that the topic of reserves is of great importance and interest to the industry, and it is desirable that a full discussion of the issues occur prior to changing the reserve limitation. They further indicated that the informal rulemaking process would provide ample opportunity for a thorough discussion and analysis of the pertinent issues prior to making a recommendation to the USDA for changing the reserve cap. Witnesses further stated that the order's voting requirements for a "super-majority" to approve a Board action would ensure that a high level of industry agreement is reached before any recommended change could be made. Witnesses also pointed out that the Board itself cannot implement an informal rulemaking change. Such changes are recommended to the USDA, and are only implemented after informal rulemaking by USDA. Witnesses testified that changes to the primary reserve capacity through informal rulemaking should be made no more than one time per year to prevent any market disruption that could occur by changing it more frequently. The proposed requirement that any change must be recommended no later than September 30 of the prior year would allow all industry participants to be fully aware of the regulation well in advance of its implementation.

Proponents of the proposal presented testimony indicating that changes in the

industry have occurred which may warrant a change in the primary reserve inventory cap in the future. Handlers are obligated to provide cherry products to meet their reserve obligation, and they currently produce a broader spectrum of products than when the order was formulated in 1996. In the past, the primary product produced and sold was frozen cherries; the product mix is now more diverse with increased amounts of products such as dried cherries, frozen concentrate, and single strength juice being marketed. Because there is now a wider variety of cherry products produced, held in inventory, and sold than in the past, it may be necessary at some point to increase the reserve capacity so the industry can adequately supply buyer's needs with reserve product if and when the reserve is released. Witnesses testified that industry production and sales information is more accurate and more readily available now than in the past, which contributes to the need for the marketing order and its rules and regulations to be responsive to changes in a more timely manner.

Additional testimony suggested that it may be desirable to increase the reserve cap in the future due to an anticipated increase in demand and sales. In 2002, the industry experienced an extremely short crop, and sales in subsequent years decreased as buyers sourced product from different suppliers or used substitute products. It is anticipated that the industry will ultimately regain lost sales and eventually increase demand, especially with the support of a new industry-wide promotion program recently implemented. An increase in demand and annual sales could warrant an increase in the reserve capacity at some point in the future. For example, if annual demand increases, and the industry has a short crop like in 2002, it would be in a better position to adequately supply markets if a larger reserve is in place.

Witnesses opposed to the proposal indicated that the current 50-million-pound cap has worked well for the industry. When the order was promulgated, a 50-million-pound reserve was considered to be an appropriate level, and would help prevent a large inventory buildup. A previous tart cherry marketing order in effect from 1971 to 1987 was not as effective as it could have been because there was no cap on the reserve, which led to the buildup of excessively large inventories. This situation ultimately contributed to the demise of that program, according to testimony.

One witness testified that it is good business practice to carry approximately 25 percent of annual sales in inventory. A 50-million-pound reserve is thus appropriate for the industry because annual industry sales have been in the range of 200 million pounds in recent years. If the industry carries too large a reserve, grower returns could be negatively affected because the demand for tart cherries is relatively inelastic, according to the witness.

Another witness testified that current features of the order allow adequate reserve product to be made available to augment market supplies. There is no need to increase the reserve cap for that purpose, according to the witness.

The witness further testified that the 50-million-pound reserve capacity was a core element of the order when it was promulgated, and its intended use was to manage supplies wisely. According to the witness, no evidence was presented at the hearing that warrants a specific change to the reserve capacity. However, the witness stated that if a change in the reserve capacity is appropriate in the future, any change should be subject to specific, measurable criteria for the Board to consider. As discussed below, such consideration should be part of the Board's analysis and recommendation to USDA.

This proposal would not increase the 50-million-pound primary reserve capacity. The amendment, if adopted, would only change the process by which a future revision in the reserve capacity could be effectuated if conditions warrant.

The record shows that industry and market conditions change over time, and there may be circumstances that would warrant a change in the reserve capacity. Allowing such a change to be made through informal rather than formal rulemaking would add flexibility to the order by providing the industry with an additional tool to respond to industry and market conditions in a more timely and efficient manner.

Hearing testimony indicated that it is desirable to for the Board to conduct a full and thorough analysis when recommending changes to key elements in marketing order programs, such as volume control provisions. This includes the impacts of any proposed change on producers and handlers. Witnesses testified that it is also desirable to attain a high level of agreement among industry members before regulatory changes are implemented.

There can be benefits in allowing changes to be made to program requirements through informal rulemaking rather than formal rulemaking. As with all recommendations for informal rulemaking, USDA expects the Board to fully consider and analyze pertinent factors when making recommendations to change the reserve capacity.

In consideration of the record, USDA recommends that Section 930.50(i) be revised to authorize changing the reserve capacity from its current 50-million-pound limit through informal rulemaking. Such a change should only occur once per year, and any recommendation for a change should be made by the Board to USDA no later than September 30 of the preceding year. Any change would remain in effect until subsequently modified through informal rulemaking. The requirement to make any such changes no more than one time per year would help to ensure that the industry has sufficient time to plan and respond to the change, and the requirement that any change must be recommended no later that September 30 of the prior year would allow sufficient time to implement the change. In addition, the super-majority voting requirement of the Board will help to ensure that any recommendation for a change to the reserve capacity has a high level of support.

For the above reasons, the proposed amendment to § 930.50(i) is recommended for adoption.

Material Issue Number 2—Authority to Establish a Minimum Inventory Level at Which Reserves Would Be Released

The order should be amended to add the authority for the Board to establish a minimum inventory level at which cherries held in the primary and secondary reserves would be released and made available to handlers as free tonnage. This change would allow the Board to clear out the primary reserve and subsequently the secondary reserve when a specified inventory level of tart cherries is reached. The specified inventory level would be established by the Secretary through informal rulemaking upon recommendation of the Board.

Section 930.54 of the order specifies different uses and conditions for release of cherries placed in inventory reserve. Reserve cherries may be released from the primary or secondary reserve if demand is greater than supply in commercial outlets, if the Board recommends a portion or the entire reserve inventory be released for sale in designated markets, or the cherries are to be used in certain exempt outlets.

Section 930.55 of the order provides authority and establishes parameters for a primary reserve, including a maximum quantity of product that can be held in primary reserve inventories.

Section 930.57 provides authority and parameters for a secondary reserve. Quantities of product in excess of the maximum amount established in the primary reserve may be placed in the secondary reserve.

Section 930.57(d) of the order states, in part, that "No cherries may be released from the secondary reserve until all cherries in any primary inventory reserve established under § 930.55 have been released." Based on the language in § 930.57(d) handlers cannot access the secondary reserve if any cherries remain in the primary reserve. In addition, the current provisions of the order do not allow the Board to require handlers to release all inventory held in their portion of the primary reserve. The proposed amendment would authorize the Secretary, upon recommendation of the Board to establish a minimum inventory level at which all remaining cherries held in the primary and secondary reserve would be released and made available to handlers as free tonnage.

Witnesses testified that because handlers cannot access the secondary reserve until the primary reserve is completely depleted, minimal amounts left in the primary reserve can create problems for the industry. According to testimony, this may occur when handlers do not take full advantage of opportunities to utilize their portion of the primary reserve and carry minimum inventories in the primary reserve. Therefore, a minimal amount of inventory remaining in the primary reserve of one or a few handlers can prevent the rest of the industry from accessing the secondary reserve. In effect, this can prevent the majority of the industry from clearing out excess reserve inventories.

The record indicates that there should be a way to access the secondary reserve when there is a minimal amount of product remaining in the primary reserve and handlers are not willing or are unable to completely deplete their reserve inventories. The proposed amendment would provide a way to clear out small amounts of primary reserve and provide access to secondary reserve inventories when necessary.

According to the record, implementation of this amendment could also reduce costs associated with administering the reserve program. A significant portion of the Board staff's time is directed at tracking reserve inventory by reviewing reports from handlers and also performing on-site reviews of records and verification of handler inventories. Once the reserve is released, it is no longer necessary for Board staff to track the reserve inventory.

Similar to the Board staff, handlers also incur costs in maintaining reserves. These costs include the cost of storage and the costs associated with tracking inventory levels. If the storage time is reduced, the cost to handlers will also be reduced.

Witnesses stated that when inventory levels reach a minimal amount, the costs of tracking inventory at the Board and handler level, plus storage costs, outweigh any potential benefit from carrying inventory in the primary reserve.

According to witnesses, the intent of this proposal would be to authorize the Board, through informal rulemaking, to establish the inventory level at which the Board could release reserves when levels are minimal.

The proposed amendment, if implemented, has the potential to positively impact the market by allowing for the sale of more tart cherries than the current order provides.

One witness testified against the proposal. The witness stated that no quantification of the potential cost savings was offered by the proponents. The witness suggested as an alternative that the Board propose or recommend a volume level at which the cost of regulation exceeds the benefit. However, no such proposal was offered at the hearing.

The proposed amendment would not establish a specific quantity at which primary reserves would be released. Witnesses testified that the intent of the proposed amendment is for the Secretary to establish the level through informal rulemaking after discussion and recommendation of the Board. Pertinent factors would be considered and analyzed during that process. No proposal to establish a specific level at which the reserve would be released was presented at the hearing. The Board is made up of a diverse industry group that ensures that all issues will be discussed, and with USDA oversight, the appropriate threshold would be established. Establishing the minimum inventory level through informal rulemaking would ensure broad support due to the two-thirds super majority vote needed for Board approval and recommendation to the Secretary. Once the minimum inventory level is established, the Board staff would administer the reserve release.

According to the record, providing authority to establish a minimum inventory level at which reserves would be released through the informal rulemaking process would provide additional flexibility in administering the reserve program. If the Board ultimately recommends a minimum level at which reserves would be released, it would help the industry to access secondary reserves in certain situations. It could also help reduce costs associated with the tracking and storing of minimal amounts of reserve product by handlers and Board staff.

Based on the record evidence, USDA recommends amending the order as proposed by the Board by adding § 930.54(d) to authorize the Secretary, upon recommendation of the Board, to establish a minimum inventory level at which all remaining product held in reserves would be released to handlers for use as free tonnage.

Material Issue Number 3—Establishment of a Minimum Age Limitation on Product Placed Into Reserves

The order should be amended to establish a minimum age limitation on products placed into reserves. Currently, there is no age limitation on products carried in the reserves. Product carried in storage can deteriorate over time and is more difficult to sell than product stored for a shorter period.

Section 930.55 of the order specifies parameters for cherries placed into reserves. Reserve cherries can be in the form of frozen, canned, dried, or concentrated juice.

According to witness testimony, the marketing order and its inventory reserve provisions were crafted with the idea that market forces would generally define the products carried in the reserve. Handlers are given the option of carrying whatever form and whatever type of product they choose in the reserve. There are no quality standards applied to products placed into reserves, nor is there a limitation regarding the age of products that can be carried in the reserve. This has created a situation where handlers can carry product that is several years old in the reserve inventories. Witnesses testified that because product quality deteriorates over time, poor quality product is often carried in reserve inventory.

According to the record, one of the main rationales for the establishment of the reserve program was the concept that the release of reserve inventories in low production years would support the long-term marketing efforts of the industry. This can only be achieved if the reserve products released are acceptable to the market. Establishing a minimum age limitation on reserve product would prevent product that has deteriorated over time from being held in reserve inventories. This would

ultimately aid the industry in its marketing efforts by having better quality products available when reserves are released to the market.

One witness testified that the marketing order currently has authority to regulate the quality of cherries held in reserves. If the Board wants to regulate the quality of reserve product, it should do so through that authority. The witness further testified that the Board's proposal to limit the age of cherries placed in reserve would not prevent handlers from placing low-grade cherries in reserve, and that such cherries can be challenging to sell.

Other witnesses acknowledged that the order contains authority to regulate the quality of cherries held in reserves, and this can be done through establishing minimum grade, quality, and condition requirements. However, witnesses also testified that the industry has chosen not to implement grade and quality standards with respect to products carried in the reserve. According to witness testimony, establishing and complying with minimum grade and quality standards would be expensive to the industry due to inspection costs, inventory management costs, and added costs associated with monitoring and tracking product grade. Witnesses testified that a more practical solution for the industry is to establish an age limitation on reserve products. Since tart cherry products deteriorate over time and generally have a shelf life of up to three years according to testimony, placing an age limitation of three years on reserve product should help to ensure reserve product is of marketable quality.

Based on the record evidence, USDA recommends amending § 930.55(b) as proposed by the Board to require that products placed into reserve inventory must have been produced in the current or preceding two crop years.

Material Issue Number 4—Revise Voting Requirements Necessary to Approve a Board Action

The order should not be amended to revise the number of votes necessary to approve a Board action.

Section 930.32 establishes the quorum requirements for Board meetings and the voting requirements necessary to approve Board actions. This section specifies that two-thirds of the members of the Board, including alternates acting for absent members, shall constitute a quorum. It further specifies that for any action of the Board to pass, two-thirds of the entire Board must vote in favor of such action.

The Board proposed amending the voting requirement in § 930.32 to specify that for any action of the Board to pass, at least two-thirds of those present at the meeting must vote in support of such action. The quorum requirement would not change under the proposal.

Witnesses in favor of this proposal believe the current voting requirement can give members who are not in attendance at meetings an undue influence on the outcome of votable issues. Witnesses believed that because the current requirement for passing a Board action is based on a favorable vote of at least two-thirds of the entire Board membership, any vacant Board position at a meeting results in the equivalent of a "no" vote on all votable issues. Witnesses further testified that the current requirement may encourage members to not attend a meeting if they do not want to discuss the merits of an issue, and that their non-attendance has an impact on the outcome of any vote taken at the meeting. The proposed amendment, according to proponents, would encourage members to attend meetings because they would no longer have an impact on the outcome of Board actions by virtue of their absence. If the proposal is implemented, members would have more incentive to attend meetings in order to discuss, vote, and have an impact on Board actions, according to witnesses. Witnesses also testified that improved meeting attendance would lead to increased interaction and discussion of industry issues among Board members.

Witnesses asserted that the current voting requirements are unnecessarily restrictive. The current requirements could allow a small minority of Board members to effectively block an action that may be favored by the majority of the Board. For example, with an 18 or 19-member Board, six members could block an action favored by 13 members. An example cited at the hearing referenced a specific Board meeting where 15 of 19 members were present. The required number of votes to pass a Board action was 13. It was testified that a small minority of three members were not supportive of an issue that the majority of Board members favored, which prevented the Board from taking an action it may have otherwise taken.

Witnesses opposed to this proposed change testified that the proposed change to the voting requirements could create a situation where a minority number of Board members could approve an action. For example, if the Board consisted of 19 members and there were 13 members present at a meeting, an action could be passed by an affirmative vote of nine members. Nine members would represent only 47 percent of the 19 Board members.

Witnesses opposed to the proposal also testified that the proposed change could increase the possibility that members affiliated with a common sales constituency or region could dominate the Board and Board actions. This effect could be amplified if the proposed amendment to § 930.20 (*see* material issue #6) is adopted. That particular proposal could result in an increase in the number of Board members affiliated with a common sales constituency under certain circumstances.

Witness testimony also contended that there is no evidence that the current voting requirements are ineffective. Lacking any evidence to the contrary, the arguments used in implementing the current voting requirements are as valid now as when they were originally implemented, according to one witness.

The contention that a vacant Board position at a meeting automatically results in a "no" vote on all votable issues is not correct. If a Board seat is vacant at a meeting, the vacant seat would not be recorded in vote counts. In contrast however, under the order, voting requirements do not change based on the number of members present at the meeting. It takes a fixed number of votes to pass a Board action, regardless of the number of members in attendance at a meeting. Thus, if a member was absent from a meeting, that member's absence would have the same impact on a vote as if the member was present and voted "no".

According to statistics presented at the hearing regarding attendance at past Board meetings, there was non-attendance of members in 20 of the past 40 Board meetings. Of the 20 meetings with members not in attendance, 17 of those meetings had one member absent, two meetings had two absent members, and one meeting had four absences. These statistics indicate that lack of attendance of Board members has not been an overriding problem at Board meetings. In fact, only 3.4% of the available Board seats have been unrepresented in the 40 meetings for which statistics were provided. Further, the statistics do not indicate there is an attendance problem from any particular region or district. Given the size of the Board (18 or 19 members, depending on production levels in the districts), and the geographic disbursement of members and travel involved to attend meetings, the meeting attendance record is very high. On a percentage basis, nearly 97 percent of available Board seats were filled in the 40 meetings for which statistics were provided.

Record testimony indicated that the Board tries to reach consensus on issues coming before it. Most actions taken by the Board are unanimous or very close to unanimous, indicating a high degree of support for Board actions.

The current super-majority voting requirements were intentionally incorporated into the order when it was promulgated and subsequently amended. The requirements were designed to help ensure a high degree of support for issues at the Board level. According to the order's promulgation record, the current voting requirements were incorporated into the order to ensure that the industry majority supports actions of the Board, and that minority interests are addressed. Further, the requirements were intended in part to ensure that a single sales constituency would not have a controlling interest on the Board. The record evidence does not refute that these same issues are valid today. Further, the evidence does not show that the current voting requirements are having an undue impact on Board actions or functions or that lack of attendance has caused an undue influence on the outcome of Board actions.

The record evidence does not support changing the voting requirements under the order. For the reasons discussed herein, USDA recommends that proposed amendment to § 930.32(a) not be adopted.

Material Issue Number 5—Revise Nomination and Election Process for Handler Members on the Board

The order should be amended to require a handler to receive support from handler(s) that handled at least five percent of the average production of tart cherries handled in the applicable district in order to be eligible to participate as a candidate in an election for Board membership. The order should also be amended to require a handler to receive support from handler(s) that handled at least five percent of the average production of tart cherries handled in the applicable district in order to be elected by the industry and recommended to the Secretary for Board membership.

Section 930.23 specifies procedures and criteria for growers and handlers to be nominated as candidates for Board membership. It also specifies procedures and criteria for candidates to be elected by the industry for recommendation to the Secretary for Board membership.

To be nominated as a Board candidate, a handler must be nominated by one or more handlers, other than the nominee, from the applicable district. If there are fewer than two handlers in the district, a handler can nominate him or herself. To be elected by the industry for recommendation to the Secretary, the successful handler candidate is the candidate receiving the most votes. Each eligible handler is entitled to one vote, and there is no weight given to the individual votes based on the volume of cherries handled.

The amendment proposed by the Board would provide additional criteria for being nominated as a handler candidate and being elected by the industry for recommendation for a handler position on the Board. The proposed additional criteria for a person to be nominated as a handler candidate would require the prospective candidate to attain support from another handler or handlers whose combined tonnage handled represents at least five percent of the average production handled in the applicable district. If a handler attained this five percent support, he or she could then be a candidate in the election. A successful candidate would then be required to similarly receive support (through the balloting process) from another handler or handlers whose combined tonnage represented no less than five percent of the average production handled in the applicable district. Of the candidates who received support from handlers representing at least five percent of the average production in the district, the candidate with the most votes would be recommended to the Secretary for Board membership.

Witnesses testified that handler members on the Board should at least have support of a minimum amount of tonnage handled in the applicable district to help ensure they represent the interests of handlers in the district. Obtaining support from handlers representing at least five percent of the volume in the district was considered to be reasonable, and would not be an overly burdensome amount of support to obtain. Witnesses also testified that under the order's current provisions, handlers representing a small amount of volume could attain and potentially control the handler seats on the Board. Witnesses indicated that it would not be equitable to the handlers representing the vast majority of production if this situation was to occur.

Testimony was also provided at the hearing regarding application of this proposed amendment in conjunction with the proposed amendment to § 930.20(g) addressed in material issue number six. It was discussed that if a potential handler candidate for Board membership could not achieve support from handlers handling five percent of the average production in a district, that should not prevent him or her from serving on the Board if it would prevent a sales constituency conflict from occurring as provided in § 930.20(g). (A sales constituency conflict is considered to exist if two persons from the same district are affiliated with the same sales constituency.)

Record testimony supports requiring a minimum level of support for a handler to be elected to the Board. A provision to require members to have support from their peers representing at least five percent of the volume in the district would help to ensure that commercial handler interests in the applicable district are being represented. Such a provision would not preclude a small handler from serving on the Board. It would only require a handler to garner a minimum level of support from industry peers in order to serve on the Board. The provision would establish a minimum threshold of support in terms of volume handled to represent the constituents in the district.

However, testimony also was provided at the hearing regarding application of the proposed amendment in conjunction with the proposed amendment to § 930.20(g) addressed in material issue number six. As discussed in material issue number six, USDA agrees with testimony indicating that if a potential handler candidate for Board membership could not achieve support from handlers handling five percent of the average production in a district, that should not prevent him or her from serving on the Board if it would prevent a sales constituency conflict from occurring as provided in § 930.20(g). (A sales constituency conflict is considered to exist if two persons from the same district are affiliated with the same sales constituency.)

Record evidence supports adopting the Board's proposal by amending § 930.23(b)(2) and § 930.23(c)(3)(ii) of the order to require handler candidates seeking nomination to the Board to receive support from handler(s) that handled at least five percent of the average production of tart cherries handled in the district in which he or she is seeking the position. Record evidence also supports adding provisions to § 930.23(b)(2) and § 930.23(c)(3)(ii) that would conform this section to the proposed amendments to § 930.20(g) regarding sales constituency affiliation. USDA recommends adoption of this amendment as proposed, with changes as noted.

Material Issue Number 6—Revise Board Membership Affiliation Requirements

The order should be amended to revise Board membership affiliation requirements to allow more than one Board member per district from being affiliated with the same sales constituency if it cannot be avoided.

Section 930.20(g) of the order currently provides that no more than one Board member may be from, or affiliated with, a single sales constituency in those districts with more than one seat on the Board. A sales constituency is defined in § 930.16 as "* * * a common marketing organization or brokerage firm or individual representing a group of handlers or growers * * *" The purpose of this provision is to achieve a fair and balanced representation on the Board and to prevent any one sales constituency from gaining control of the Board.

The proposed amendment would add a proviso to the prohibition limiting the number of Board members from a sales constituency in districts with more than one member. The proviso states that the sales constituency prohibition shall not apply in a district where such a conflict cannot be avoided.

Witnesses supporting this proposed amendment testified that the current order provisions recently prevented District 7, the State of Utah, from attaining its full complement of positions on the Board. Section 930.20(b) provides that districts with greater than 10 million pounds of production and less than 40 million pounds are entitled to two seats on the Board. Based on this provision, the State of Utah is entitled to two positions on the Board. However, a situation occurred in recent years where there were no eligible persons willing to serve on the Board from Utah who were affiliated with a different sales constituency than the existing Board member, as required by Section 930.30(g). Witnesses testified that despite extensive outreach efforts, they were only able to locate one eligible candidate from a different sales constituency, but that person had no interest in serving on the Board. Because of this situation, there was one vacant Utah seat on the Board. Utah was unable to achieve its full complement of positions on the Board pursuant to § 930.20(b) of the order. Witnesses believed that a fair and equitable process was not being well served in this situation, and that a conflict exists between sections 930.20(b), which allocates Utah two positions on the Board, and 930.20(g), which prevents two members from the same sales constituency in the same district from serving on the Board.

The proposed amendment is intended to prevent this type of situation from occurring. Witnesses testified that a district's right to representation on the Board is more important than the requirement that Board members from the same District not be affiliated with the same sales constituency.

One witness expressed reservations about the proposed amendment. He indicated that a potential increase in the number of Board members affiliated with the same sales constituency may not promote diversity of views on the Board. The witness also stated that this proposal would not be desirable if the proposed change to the voting requirements is adopted. The witness suggested an alternative idea would be to divide the State of Utah into two districts for Board representation purposes. However, the witness did not present a specific alternative proposal or any information or analysis demonstrating how this would address the problem.

The record indicates that the Board's proposal would address the issue of ensuring that the various districts under the order would be able to maintain their share of representation on the Board.

The provisions of the proposed amendment would allow two Board members from a district to be affiliated with the same sales constituency if it cannot be avoided. An example given at the hearing regarding when a sales constituency conflict could not be avoided was if there were no other persons willing and able to serve on the Board from a particular district from a different sales constituency. Witnesses were questioned about the possible implementation of this proposed amendment and the proposed amendment under material issue number five that would require a handler Board member candidate to achieve support from handlers representing at least five percent of the production in the District in order to run for a position and be elected to the Board. Some witnesses testified that if the only qualified candidate in a particular district that was not affiliated with the same sales constituency as the other Board member from that district could not achieve the five percent support, then that person should be able to serve on the Board to avoid having two members from the same district affiliated with the same sales constituency. Other witnesses testified that if such a situation occurred, the candidate should not be allowed to serve on the Board, and if another qualified candidate from the same sales constituency as the existing member was available and met the five percent criterion, that candidate should be able to serve.

The record is clear that if there are no willing and eligible candidates available to serve on the Board from a different sales constituency than the existing member(s), then it should be permissible to allow two members from the same sales constituency to serve so that each district achieves its share of representation. In order to appropriately address the issue that generated this proposal while avoiding two members on the Board from the same sales constituency, USDA concludes that it is reasonable to not apply the five percent requirements discussed in material issue number five in these circumstances. Accordingly, as provided in material issue number five, language is added to conform and clarify the two sections of the order.

Record evidence supports amending § 930.20(g) to revise Board membership affiliation requirements to allow more than one Board member per district from being affiliated with the same sales constituency if such a conflict cannot be avoided. USDA recommends adoption of this amendment as proposed.

Material Issue Number 7—Update Order Language

Section 930.23 of the order should be revised to update order language to more accurately reflect grower and handler participation in the nomination and election process in districts with only one Board representative. Section 930.20 establishes the calculations for the number of representatives on the Board to which each district is entitled. Based on the calculations established in § 930.20, the number of Board representatives can vary from year to year due to shifts in production levels in various districts.

Sections 930.23(b)(5) and (c)(4) specifically reference Districts 5, 6, 8 and 9 in regard to the nomination and election process. Those were the districts entitled to one Board seat when the order was initially promulgated. However, districts that are entitled to one Board seat have changed over time due to shifts in production. Amending § 930.23(b)(5) and (c)(4) by removing the specific references to Districts 5, 6, 8 and 9 and replacing it with generic language to cover any district that is entitled to only one Board representative based on the representation calculation established in § 930.20 would update order language to

accommodate changes in production patterns in the tart cherry industry. This amendment is intended to simply update language rather than alter the meaning of order provisions in any way. Witnesses supported this proposed amendment at the hearing and there was no opposition expressed.

The record evidence supports amending § 930.23(b)(5) and (c)(4) as proposed.

Conforming Changes

The Agricultural Marketing Service also proposed to make such changes as may be necessary to the order to conform to any amendment that may result from the hearing. Except as previously discussed, the Department has identified no additional conforming changes.

Small Business Considerations

Pursuant to the requirements set forth in the Regulatory Flexibility Act (RFA), AMS has considered the economic impact of this action on small entities. Accordingly, AMS has prepared this initial regulatory flexibility analysis.

The purpose of the RFA is to fit regulatory actions to the scale of business subject to such actions so that small businesses will not be unduly or disproportionately burdened. Marketing orders and amendments thereto are unique in that they are normally brought about through group action of essentially small entities for their own benefit.

Small agricultural producers have been defined by the Small Business Administration (SBA) (13 CFR 121.201) as those having annual receipts of less than $750,000. Small agricultural service firms, which include handlers regulated under the order, are defined as those with annual receipts of less than $6,500,000.

There are approximately 40 handlers of tart cherries subject to regulation under the order and approximately 900 producers of tart cherries in the regulated area. A majority of the producers and handlers are considered small entities according to the SBA's definition.

The geographic region regulated under the order covers the states of Michigan, New York, Oregon, Pennsylvania, Utah, Washington, and Wisconsin. Acreage devoted to tart cherry production in the regulated area has declined in recent years. According to data presented at the hearing, bearing acreage in 1987–88 totaled 50,050 acres; by 2006–2007 it had declined to 37,200 acres. Michigan accounts for 74 percent of total U.S. bearing acreage with 27,700 bearing acres. Utah is second, with a reported 2,800 acres, or approximately eight percent of the total. The remaining states' acreage ranges from 700 to 2,000 acres.

Production of tart cherries can fluctuate widely from year to year. The magnitude of these fluctuations is one of the most pronounced for any agricultural commodity in the United States, and is due in large part to weather related conditions during the bloom and growing seasons. This fluctuation in supplies presents a marketing challenge for the tart cherry industry because demand for the product is relatively static. In addition, the demand for tart cherries is inelastic, which means a change in the supply has a proportionately larger change in the price level.

Authorities under the order include volume regulation, promotion and research, and grade and quality standards. Volume regulation is used under the order to augment supplies during short supply years with product placed in reserves during large supply years. This practice is intended to reduce the annual fluctuations in supplies and corresponding fluctuations in prices.

The Board is comprised of representatives from all producing areas based on the volume of cherries produced in those areas. The Board consists of a mix of handler and grower members, and a member that represents the public. Board meetings where regulatory recommendations and other decisions are made are open to the public. All members are able to participate in Board deliberations, and each Board member has an equal vote. Others in attendance at meetings are also allowed to express their views.

The Board appointed a subcommittee to consider amendments to the marketing order. The subcommittee met several times for this purpose, and ultimately recommended several amendments to the order. The Board subsequently requested that USDA conduct a hearing to consider the proposed amendments. The views of all participants were considered throughout this process.

In addition, the hearing to receive evidence on the proposed amendments was open to the public and all interested parties were invited and encouraged to participate and express their views.

The proposed amendments are intended to provide additional flexibility in administering the volume control provisions of the order, and to update Board nomination, election, and membership requirements. The amendments are intended to improve the operation and administration of the order. Record evidence indicates the proposals are intended to benefit all producers and handlers under the order, regardless of size.

Proposal 1—Adding the Authority to Change the Primary Reserve Capacity

The proposal described in Material Issue No. 1 of this recommended decision would amend § 930.50 of the order to authorize changing the primary reserve capacity associated with the volume provisions of the order through informal rulemaking. Changing the reserve capacity currently requires amendment of the order through the formal rulemaking process.

The order establishes a fixed quantity of 50-million pounds of tart cherries and tart cherry products that can be held in the primary reserve. Any reserve product in excess of the 50-million-pound limitation must be placed in the secondary reserve.

Free tonnage product can be sold to any market outlet, but most shipments are sold domestically, which is considered the primary market. Reserve product can be used only in specific outlets which are considered secondary markets. These secondary markets include development of export markets, new product development, new markets, and government purchases.

When the order was promulgated, a 50-million-pound limitation was placed on the capacity of the primary reserve. Proponents of the current order proposed a limitation on the quantity of product that could be placed into the primary reserve. That limitation was incorporated into the order, and can only be changed through the formal rulemaking process.

Economic data presented when the order was promulgated indicated that a reserve program could benefit the industry by managing fluctuating supplies. Witnesses at the February and March 2007 hearing indicated the order has been successful in this regard. However, the record indicated that the order could be more flexible in allowing modifications to the 50-million-pound limitation should conditions warrant such a change in the future.

If the reserve capacity was changed, costs associated with storing product in reserves could also change. In addition, to the extent such a change could affect supplies in the marketplace; returns to both growers and handlers could also be affected.

Any Board recommendation to change the reserve capacity would be required to be implemented through the informal rulemaking process. As part of the informal rulemaking process, USDA

expects that any Board recommendation would include an analysis of the pertinent factors and issues, including the impact of a proposed regulation on producers and handlers. Any change to the reserve capacity would be implemented only with analysis of the expected economic impact on the affected entities.

Proposal 2—Adding the Authority To Establish a Minimum Inventory Level at Which Reserves Would Be Released

The proposal described in Material Issue No. 2 would amend § 930.54 of the order to provide the Board with the authority to establish a minimum inventory level at which reserves would be released and made available to handlers as free tonnage. If implemented, the proposed amendment would allow the Board to clear out the primary reserve and subsequently the secondary reserve when a specified minimum inventory level of tart cherries is reached. The specified minimum level would be established through the informal rulemaking process.

Under current order provisions, handlers cannot access the secondary reserve until the primary reserve is empty. Based on current language of the order, one handler who has not completely disposed of or otherwise fulfilled its reserve obligation can prevent access to the secondary reserve.

The proposed amendment would allow the Board to clear out the primary reserve when inventory levels are at a minimum level in order to provide the industry access to secondary reserve inventories.

If the amendment were implemented, costs to both handlers and the Board could be reduced. Handlers incur costs in maintaining reserves. According to the record, these costs include the cost of storage, which can be in the range of $.01 per pound per month. Handlers also incur costs associated with tracking their own inventory levels. Witnesses stated that when inventory levels reach a minimal amount the costs of tracking inventory outweighs the benefit from carrying inventory in the primary reserve.

A significant portion of the Board staff's time is directed at tracking reserve inventory maintained at handlers' facilities. Hearing witnesses testified that while it is difficult to quantify the exact value of the Board staff's time to conduct these activities, the time could be better spent on other industry issues, and it is unnecessary to track minimal levels of inventory.

The proposed amendment, if implemented, could have a positive impact on the market. As inventories are released from the reserves, products could be sold, generating revenue for the industry. This proposed amendment, if implemented, is expected to reduce costs to handlers and the Board, thus having a positive economic impact.

Proposal 3—Establishing an Age Limitation on Products Placed Into Reserves

The proposal described in Material Issue No. 3 would amend § 930.55 to require that products placed in reserves must have been produced in the current or immediately preceding two crop years. If implemented, this proposed amendment would allow the Board to place an age limit on products carried in the reserve. The purpose of the amendment would be to help ensure that products of saleable quality are maintained in reserve inventories.

Witness supported the proposed amendment by stating that it would add credibility to product quality for all products carried in the reserve. Currently, handlers can carry products they have no intention of selling just to meet their reserve obligation. This amendment would require handlers to rotate product in their reserve inventory, thus preventing them from maintaining the same product in the reserve year after year. Product held in inventory tends to deteriorate over time. When reserve product is ultimately released for sale to meet market demand, this proposed amendment would help ensure the reserve product available is in saleable condition and can satisfy the market's needs. Assuring product is available to satisfy the market helps to foster long term market stability.

In terms of costs, handlers may experience some minimal costs associated with periodically rotating product through their reserve inventory. It would be difficult to estimate such costs because they would vary depending upon each handler's operation. To the extent costs would be increased, they would be proportionate to each handler's share of the entire industry's reserve inventory. Each handler's reserve inventory obligation is based on the handler's share of the total crop handled. Thus, small handlers would not be disproportionately burdened.

It is anticipated that the benefits of providing a good quality product in reserves to ultimately supply markets when needed would outweigh any costs associated with implementation of this amendment.

Proposal 4—Revision of Voting Requirements To Approve Board Actions

The proposal submitted by the Board in Material Issue No. 4 would revise voting requirements under § 930.32 of the order. Current requirements provide that any action of the Board requires a two-thirds vote of the entire Board. The proposal would allow passage of a Board action with a two-thirds vote of those present at a meeting. USDA denied this proposal and will not change the voting requirements for reasons specified earlier in this recommended decision.

Proposal 5—Revision of Nomination and Election Process for Handler Members on the Board

The proposal submitted by the Board in Material Issue No. 5 relates to nomination and election of Board members under § 930.23 of the order. It would require a handler to receive support from handlers that handled at least five percent of the average production of tart cherries in the applicable district in order to be a candidate and to be elected by the industry and recommended to the Secretary for Board membership.

Under the current order, there is no accounting for handler volume in the nomination and balloting process. Each handler is entitled to one equal vote. This proposal would continue to allow each handler to have one vote, but would also require handler candidates to be supported by handlers representing at least five percent of the average production in the applicable district to be eligible to run for a Board position and to be elected by the industry for recommendation to the Secretary. This would help to ensure that handler members on the Board represent the interests of handlers in their district that account for at least a minimal percentage of the volume in the district.

This proposed amendment is not anticipated to have a significant economic impact on small businesses. It only affects the nomination and election criteria for membership on the Board by adding volume as an element of support to help ensure that Board membership reflects the interests of its constituency. All handlers, regardless of size, will continue to be able to participate in the nomination and election process. The process would continue to allow for both small and large handlers to be represented on the Board.

Proposal 6—Revision of Board Membership Affiliation Requirements

The Board's proposal discussed in Material Issue No. 6 would amend § 930.20 to allow more than one Board member to be affiliated with the same sales constituency from the same district, if such a conflict cannot be avoided.

Currently, § 930.20 does not allow more than one Board member to be affiliated with the same sales constituency from the same district under any circumstances. The purpose of this provision is to prevent any one sales constituency from having a controlling influence on Board issues and actions. However, a situation occurred in District 7, Utah, where this particular provision of the order did not allow the district from having two representatives on the Board, as it was entitled to under section 930.20 (b) of the order. In that situation, the only candidates willing to serve on the Board from Utah were affiliated with the same sales constituency. Thus Utah was only able, under the marketing order rules, to seat one of the two Board representatives it was entitled to.

The proposed amendment is designed to prevent this problem from occurring in the future by allowing more than one Board member affiliated with the same sales constituency to represent a district, if such a sales constituency conflict cannot be avoided. The hearing record is clear that the sales constituency provision should not prevent a district from having its allocated number of seats on the board if there are eligible candidates willing to serve on the Board.

This amendment is not expected to have an economic impact on growers or handlers. It relates to representation on the Board, and is intended to help ensure each area covered under the order has the opportunity to achieve its allocated representation on the Board.

Proposal 7—Update Order Language to Accurately Reflect Grower and Handler Participation in the Nomination and Election Process in Districts With Only One Board Representative

The proposal described in Material Issue No. 7 would amend § 930.23 to revise and update order language to more accurately reflect grower and handler participation in the nomination and election process in districts with only one Board representative.

Sections 930.23(b)(5) and (c)(4) specifically reference Districts 5, 6, 8 and 9 in regard to the nomination and election process. Those were the districts entitled to one Board seat when the order was initially promulgated. However, districts that are entitled to one Board seat have changed over time due to shifts in production. Amending § 930.23(b)(5) and (c)(4) by removing the specific references to Districts 5, 6, 8 and 9 and replacing it with generic language to cover any district that is entitled to only one Board representative based on the representative calculation established in § 930.20 would update order language to better reflect the constantly changing tart cherry industry.

This amendment updates order language to remove incorrect references to district representation in the event production shifts occur. It has no economic impact on handlers, growers, or any other entities.

Interested persons were invited to present evidence at the hearing on the probable regulatory and informational impacts of the proposed amendments to the order on small entities. The record evidence is that some of the proposed amendments may result in some minimal cost increases while others will result in cost decreases. To the extent there are any cost increases, the benefits of the proposed changes are expected to outweigh the costs. In addition, changes in costs as a result of these amendments would be proportional to the size of businesses involved and would not unduly or disproportionately impact small entities. The informational impact of proposed amendments is addressed in the Paperwork Reduction Act discussion that follows.

USDA has not identified any relevant Federal rules that duplicate, overlap or conflict with this proposed rule. These amendments are intended to improve the operation and administration of the order to the benefit of the industry.

Board meetings regarding these proposals as well as the hearing date and location were widely publicized throughout the tart cherry industry, and all interested persons were invited to attend the meetings and the hearing, and to participate in Board deliberations on all issues. All Board meetings and the hearing were public forums and all entities, both large and small, were able to express views on these issues. Finally, interested persons are invited to submit information on the regulatory and informational impacts of this action on small businesses.

A 30-day comment period is provided to allow interested persons to respond to this proposal. Thirty days is deemed appropriate because these proposed changes have been widely publicized and the Board and industry would like to avail themselves of the opportunity to implement the changes as soon as possible. All written exceptions timely received will be considered and a grower referendum will be conducted before any of these proposals are implemented.

AMS is committed to complying with the E–Government Act, to promote the use of the Internet and other information technologies to provide increased opportunities for citizen access to Government information and services, and for other purposes.

Paperwork Reduction Act

Information collection requirements for Part 930 are currently approved by the Office of Management and Budget (OMB), under OMB Number 0581–0177, Tart Cherries Grown in the States of Michigan, New York, Pennsylvania, Oregon, Utah, Washington, and Wisconsin. Implementation of these proposed amendments would not trigger any changes to those requirements. It is possible that a change to the reporting requirements may occur in the future if the Board believes it would be necessary to assist in program compliance efforts. Should any such changes become necessary in the future, they would be submitted to OMB for approval.

As with all Federal marketing order programs, reports and forms are periodically reviewed to reduce information requirements and duplication by industry and public sector agencies.

Civil Justice Reform

The amendments to Marketing Order 930 proposed herein have been reviewed under Executive Order 12988, Civil Justice Reform. They are not intended to have retroactive effect. If adopted, the proposed amendments would not preempt any State or local laws, regulations, or policies, unless they present an irreconcilable conflict with this proposal.

The Act provides that administrative proceedings must be exhausted before parties may file suit in court. Under section 608c(15)(A) of the Act, any handler subject to an order may file with USDA a petition stating that the order, any provision of the order, or any obligation imposed in connection with the order is not in accordance with law and request a modification of the order or to be exempted therefrom. A handler is afforded the opportunity for a hearing on the petition. After the hearing, USDA would rule on the petition. The Act provides that the district court of the United States in any district in which the handler is an inhabitant, or has his or her principal place of business, has jurisdiction to review USDA's ruling on the petition, provided an action is filed

no later than 20 days after the date of the entry of the ruling.

Rulings on Briefs of Interested Persons

Briefs, proposed findings and conclusions, and the evidence in the record were considered in making the findings and conclusions set forth in this recommended decision. To the extent that the suggested findings and conclusions filed by interested persons are inconsistent with the findings and conclusions of this recommended decision, the requests to make such findings or to reach such conclusions are denied.

General Findings

The findings hereinafter set forth are supplementary to the findings and determinations which were previously made in connection with the issuance of the marketing agreement and order; and all said previous findings and determinations are hereby ratified and affirmed, except insofar as such findings and determinations may be in conflict with the findings and determinations set forth herein.

(1) The marketing agreement and order, as amended, and as hereby proposed to be further amended, and all of the terms and conditions thereof, would tend to effectuate the declared policy of the Act;

(2) The marketing agreement and order, as amended, and as hereby proposed to be further amended, regulate the handling of tart cherries grown in the production area (the States of Michigan, New York, Oregon, Pennsylvania, Utah, Washington, and Wisconsin) in the same manner as, and are applicable only to, persons in the respective classes of commercial and industrial activity specified in the marketing agreement and order upon which a hearing has been held;

(3) The marketing agreement and order, as amended, and as hereby proposed to be further amended, are limited in their application to the smallest regional production area which is practicable, consistent with carrying out the declared policy of the Act, and the issuance of several orders applicable to subdivisions of the production area would not effectively carry out the declared policy of the Act;

(4) The marketing agreement and order, as amended, and as hereby proposed to be further amended, prescribe, insofar as practicable, such different terms applicable to different parts of the production area as are necessary to give due recognition to the differences in the production and marketing of tart cherries grown in the production area; and

(5) All handling of tart cherries grown in the production area as defined in the marketing agreement and order, is in the current of interstate or foreign commerce or directly burdens, obstructs, or affects such commerce.

A 30-day comment period is provided to allow interested persons to respond to this proposal. Thirty days is deemed appropriate because these proposed changes have been widely publicized and implementation of the changes, if adopted, would be desirable to benefit the industry as soon as possible. All written exceptions timely received will be considered and a grower referendum will be conducted before any of these proposals are implemented.

List of Subjects in 7 CFR Part 930

Marketing agreements, Reporting and recordkeeping requirements, Tart cherries.

For the reasons set forth in the preamble, 7 CFR Part 930 is proposed to be amended as follows:

PART 930—TART CHERRIES GROWN IN THE STATES OF MICHIGAN, NEW YORK, PENNSYLVANIA, OREGON, UTAH, WASHINGTON, AND WISCONSIN

1. The authority citation for 7 CFR part 930 continues to read as follows:

Authority: 7 U.S.C. 601–674.

2. Revise paragraph (g) of § 930.20 to read as follows:

§ 930.20 Establishment and membership.

* * * * *

(g) In order to achieve a fair and balanced representation on the Board, and to prevent any one sales constituency from gaining control of the Board, not more than one Board member may be from, or affiliated with, a single sales constituency in those districts having more than one seat on the Board; *Provided,* That this prohibition shall not apply in a district where such a conflict cannot be avoided. There is no prohibition on the number of Board members from differing districts that may be elected from a single sales constituency which may have operations in more than one district. However, as provided in § 930.23, a handler or grower may only nominate Board members and vote in one district.

* * * * *

3. Revise paragraphs (b)(2) and (b)(5), redesignate paragraph (c)(3) as paragraph (c)(3)(i), add a new paragraph (c)(3)(ii), and revise paragraph (c)(4) of § 930.23 to read as follows:

§ 930.23 Nomination and election.

* * * * *

(b) * * *

(2) In order for the name of a handler nominee to appear on an election ballot, the nominee's name must be submitted with a petition form, to be supplied by the Secretary or the Board, which contains the signature of one or more handler(s), other than the nominee, from the nominee's district who is or are eligible to vote in the election and that handle(s) a combined total of no less than five percent (5%) of the average production, as that term is used § 930.20, handled in the district. *Provided,* that this requirement shall not apply if its application would result in a sales constituency conflict as provided in § 930.20(g). The requirement that the petition form be signed by a handler other than the nominee shall not apply in any district where fewer than two handlers are eligible to vote.

* * * * *

(5) In districts entitled to only one Board member, both growers and handlers may be nominated for the district's Board seat. Grower and handler nominations must follow the petition procedures outlined in paragraphs (b)(1) and (b)(2) of this section.

* * * * *

(c) * * *

(3) * * *

(ii) To be seated as a handler representative in any district, the successful candidate must receive the support of handler(s) that handled a combined total of no less than five percent (5%), of the average production, as that term is used in § 930.20, handled in the district; *Provided,* that this paragraph shall not apply if its application would result in a sales constituency conflict as provided in § 930.20(g).

(4) In districts entitled to only one Board member, growers and handlers may vote for either the grower or handler nominee(s) for the single seat allocated to those districts.

* * * * *

4. Revise paragraph (i) of § 930.50 to read as follows:

§ 930.50 Marketing policy.

* * * * *

(i) *Restricted Percentages.* Restricted percentage requirements established under paragraphs (b), (c), or (d) of this section may be fulfilled by handlers by either establishing an inventory reserve in accordance with § 930.55 or § 930.57 or by diversion of product in accordance with § 930.59. In years where required, the Board shall establish a maximum percentage of the restricted quantity which may be established as a primary

inventory reserve such that the total primary inventory reserve does not exceed 50-million pounds; Provided, That such 50-million-pound quantity may be changed upon recommendation of the Board and approval of the Secretary. Any such change shall be recommended by the Board on or before September 30 of any crop year to become effective for the following crop year, and the quantity may be changed no more than one time per crop year. Handlers will be permitted to divert (at plant or with grower diversion certificates) as much of the restricted percentage requirement as they deem appropriate, but may not establish a primary inventory reserve in excess of the percentage established by the Board for restricted cherries. In the event handlers wish to establish inventory reserve in excess of this amount, they may do so, in which case it will be classified as a secondary inventory reserve and will be regulated accordingly.

* * * * *

5. Add a new paragraph (d) to § 930.54 to read as follows:

§ 930.54 Prohibition on the use or disposition of inventory reserve cherries.

* * * * *

(d) Should the volume of cherries held in the primary inventory reserves and, subsequently, the secondary inventory reserves reach a minimum amount, which level will be established by the Secretary upon recommendation from the Board, the products held in the respective reserves shall be released from the reserves and made available to the handlers as free tonnage.

6. Revise paragraph (b) of § 930.55 to read as follows:

§ 930.55 Primary inventory reserves.

* * * * *

(b) The form of the cherries, frozen, canned in any form, dried, or concentrated juice, placed in the primary inventory reserve is at the option of the handler. The product(s) placed by the handler in the primary inventory reserve must have been produced in either the current or the preceding two crop years. Except as may be limited by § 930.50(i) or as may be permitted pursuant to §§ 930.59 and 930.62, such inventory reserve portion shall be equal to the sum of the products obtained by multiplying the weight or volume of the cherries in each lot of cherries acquired during the fiscal period by the then effective restricted percentage fixed by the Secretary; Provided, That in converting cherries in each lot to the form chosen by the handler, the inventory reserve obligations shall be adjusted in accordance with uniform rules adopted by the Board in terms of raw fruit equivalent.

* * * * *

Dated: May 27, 2010.

Rayne Pegg

Administrator, Agriculture Marketing Service.

[FR Doc. 2010–13348 Filed 6–3–10; 8:45 am]

BILLING CODE 3410–02–P

DEPARTMENT OF AGRICULTURE

Agricultural Marketing Service

7 CFR Part 1215

[Document Number AMS–FV–10–0010]

Popcorn Promotion, Research, and Consumer Information Order; Reapportionment

AGENCY: Agricultural Marketing Service, USDA.

ACTION: Proposed rule.

SUMMARY: This rule proposes to reduce the Popcorn Board (Board) membership from nine to five members to reflect the consolidation of the popcorn industry and therefore, fewer popcorn processors in the industry. In accordance with the Popcorn Promotion, Research and Consumer Information Order (Order) which is authorized by the Popcorn Promotion, Research and Consumer Information Act (Act), the number of members on the Board may be changed by regulation; provided, that the Board consist of not fewer than four members and not more than nine members. In addition, the Order states that for purposes of nominating and appointing processors to the Board, the Secretary may take into account the geographical distribution of popcorn processors.

DATES: Comments must be received by July 6, 2010.

ADDRESSES: Interested persons are invited to submit written comments on the Internet at: *http://www.regulations.gov* or to the Research and Promotion Branch, Fruit and Vegetable Programs, Agricultural Marketing Service (AMS), U.S. Department of Agriculture, (Department) Room 0632–S, Stop 0244, 1400 Independence Avenue, SW., Washington, DC 20250–0244; *facsimile:* (202) 205–2800. All comments should reference the document number and the date and page number of this issue of the **Federal Register** and will be made available for public inspection in the above office during regular business hours or it can be viewed at *http://www.regulations.gov.* All comments received will be posted without change, including any personal information provided.

FOR FURTHER INFORMATION CONTACT: Deborah Simmons, Marketing Specialist, Research and Promotion Branch, Fruit and Vegetable Programs, AMS, U.S. Department of Agriculture, Stop 0244, 1400 Independence Avenue, SW., Room 0632–S, Washington, DC 20250–0244; *telephone:* (888) 720–9917; *facsimile:* (202) 205–2800; or electronic mail: *deborah.simmons@ams.usda.gov.*

SUPPLEMENTARY INFORMATION: This rule is issued under the Popcorn Promotion, Research, and Consumer Information Order [7 CFR part 1215]. The Order is authorized under the Popcorn Promotion, Research and Consumer Information Act [7 U.S.C. 7481–7491].

Executive Order 12866

The Office of Management and Budget (OMB) has waived the review process required by Executive Order 12866 for this action.

Executive Order 12988

This rule has been reviewed under Executive Order 12988, Civil Justice Reform. The rule is not intended to have retroactive effect and will not affect or preempt any other State or Federal law authorizing promotion or research relating to an agricultural commodity.

The Act provides that any person subject to an order may file a written petition with the Department if they believe that the order, any provision of the order, or any obligation imposed in connection with the order, is not established in accordance with law. In any petition, the person may request a modification of the order or an exemption from the order. The petitioner is afforded the opportunity for a hearing on the petition. After a hearing, the Department would rule on the petition. The Act provides that the district court of the United States in any district in which the petitioner resides or conducts business shall have the jurisdiction to review the Department's ruling on the petition, provided a complaint is filed not later than 20 days after the date of the entry of the ruling.

Initial Regulatory Flexibility Act and Paperwork Reduction Act

In accordance with the Regulatory Flexibility Act (RFA) [5 U.S.C. 601–612], AMS has considered the economic impact of this action on the processors that would be affected by this rule. The purpose of the RFA is to fit regulatory action to scale on businesses subject to such action so that small businesses will not be disproportionately burdened.

Small agricultural service firms which would include processors who are covered under the Order, have been defined by the Small Business Administration (13 CFR 121.607) as those having annual receipts of no more than $7 million. Almost 50 percent of the industry is exempt from paying assessments. Based on information from the Board there are currently a total of 40 processors in the industry. Of those, 21 processors pay mandatory assessments into the program. Of the 21 processors, 11 would be classified as small processors representing 7 percent of the popcorn assessed. The top five popcorn producing states are Nebraska, Indiana, Illinois, Ohio and Iowa. In 2009, Indiana, Kansas, Michigan and Ohio had decreases in acreage planted and harvested while Kentucky, Illinois, Iowa, Missouri and Nebraska had increases in acreage planted and harvested over the acreage planted and harvested in 2008. Overall 2009 acreage planted increased by 1 percent and acreage harvested increased by 4 percent over 2008 numbers.

Most of the processors would be classified as small businesses under the criteria established by the Small Business Administration. Processors who process and distribute 4 million pounds or less of popcorn annually are exempt from this program. Persons that operate under an approved National Organics program (NOP) (7 CFR part 206) system plan; process only products that are eligible to be labeled as 100 percent organic under the NOP and are not split operations shall be exempt from the payment of assessments.

The Board currently consists of 9 members which represent small, medium and large processors in the industry.

The Board voted during its October 5, 2009, conference call to request that the Secretary reduce the number of members from nine to five and to appoint persons to reflect the consolidation of the popcorn industry and therefore, fewer popcorn processors in the industry who will equitably make up the board between large, medium and small processors. The Board would continue to strive for diversity within the industry.

Nominations and appointments to the Board are conducted pursuant to sections 1215.22, 1215.23, and 1215.25 of the Order. Appointments to the Board are made by the Secretary from a slate of nominated candidates. Pursuant to section 1215.22(3)(i) of the Order, nominations for each position shall be made by processors, and be submitted to the Secretary for appointment to the Board. The Order requires that two nominees be submitted for each vacant position.

The Department has not identified any relevant Federal rules that duplicate, overlap, or conflict with this rule.

Background

The Order became effective on July 22, 1997, and it is authorized under the Act. The Board is composed of nine processors. Nominations take into consideration the geographical distribution of popcorn production. The States that currently have representation on the Board are Nebraska, Indiana, Iowa, Missouri and Colorado. Based on information from the Board, in 2008, the top five popcorn producing states were Nebraska, Indiana, Illinois, Ohio and Iowa.

Under the Order, the Board administers a nationally coordinated program of promotion, research, consumer information and industry information designed to strengthen the position of popcorn in the marketplace, and to maintain and expand domestic and foreign markets and uses for popcorn. This program is financed by assessments on processors who process and distribute 4 million pounds or more of popcorn annually. The current rate of assessment is 6 cents per hundredweight of popcorn. The Order specifies that processors are responsible for submitting the assessment to the Board and maintaining records necessary to verify their reporting(s). Processors who processes and distributes less than 4 million pounds of popcorn annually are exempt from this assessment.

On October 5, 2009, the Board voted to decrease its membership from nine to five.

A 30-day comment period is provided to allow interested persons to respond to this proposal. Thirty days is deemed appropriate so that the proposed amendments, if adopted, may be implemented before the 2010 term of office expires on December 31, 2010. All written comments received in response to this rule by the date specified would be considered prior to finalizing this action.

Pursuant to 5 U.S.C. 553, it is also found that good cause exists for not postponing the effective date of this action until thirty days after publication in the **Federal Register** because (1) a final rule needs to be in effect before the Board makes a call for nominations for the term of office beginning January 1, 2011.

List of Subjects in 7 CFR Part 1215

Administrative practice and procedure, Advertising, Consumer information, Marketing agreements, Popcorn Promotion, Reporting and recordkeeping requirements.

For the reasons set forth in the preamble, 7 CFR part 1215 is proposed to be amended as follows:

PART 1215—POPCORN PROMOTION, RESEARCH, AND CONSUMER INFORMATION ORDER

1. The authority citation for 7 CFR part 1215 continues to read as follows:

Authority: 7 U.S.C. 7481–7491; 7 U.S.C. 7401.

2. § 1215.21, paragraph (a) is revised to read as follows:

§ 1215.21 Establishment and membership.

(a) There is hereby established a Popcorn Board of five members. The number of members on the board may be changed by rulemaking: *Provided,* that the Board consist of not fewer than four members and not more than nine members. The Board shall be composed of popcorn processors appointed by the Secretary under section 1215.24.

* * * * *

Dated: May 28, 2010.

Rayne Pegg,

Administrator.

[FR Doc. 2010–13407 Filed 6–3–10; 8:45 am]

BILLING CODE: P

DEPARTMENT OF TRANSPORTATION

Federal Aviation Administration

14 CFR Part 39

[Docket No. FAA–2010–0548; Directorate Identifier 2010–NM–041–AD]

RIN 2120–AA64

Airworthiness Directives; Bombardier, Inc. Model BD–700–1A10 and BD–700–1A11 Airplanes

AGENCY: Federal Aviation Administration (FAA), DOT.

ACTION: Notice of proposed rulemaking (NPRM).

SUMMARY: We propose to adopt a new airworthiness directive (AD) for the products listed above. This proposed AD results from mandatory continuing airworthiness information (MCAI) originated by an aviation authority of another country to identify and correct an unsafe condition on an aviation product. The MCAI describes the unsafe condition as:

Following five reported cases of balance washer screw failure on similar RATs [ram air turbines]/air driven generators installed on other aircraft types, an investigation * * * determined that a specific batch of the screws had a metallographic non-conformity that increased their susceptibility to brittle fracture. * * *

Failure of a balance washer screw can result in loss of the related balance washer, with consequent turbine imbalance. Such imbalance could potentially result in RAT structural failure (including blade failure), loss of RAT electrical power and structural damage to the aircraft and, if deployment was activated by a dual engine shutdown, could also result in loss of hydraulic power for the flight controls [and consequent reduced ability of the flightcrew to maintain the safe flight and landing of the airplane].

* * * * *

The proposed AD would require actions that are intended to address the unsafe condition described in the MCAI.

DATES: We must receive comments on this proposed AD by July 19, 2010.

ADDRESSES: You may send comments by any of the following methods:

- *Federal eRulemaking Portal:* Go to *http://www.regulations.gov.* Follow the instructions for submitting comments.
- *Fax:* (202) 493–2251.
- *Mail:* U.S. Department of Transportation, Docket Operations, M–30, West Building Ground Floor, Room W12–140, 1200 New Jersey Avenue, SE., Washington, DC 20590.
- *Hand Delivery:* U.S. Department of Transportation, Docket Operations, M–30, West Building Ground Floor, Room W12–40, 1200 New Jersey Avenue, SE., Washington, DC, between 9 a.m. and 5 p.m., Monday through Friday, except Federal holidays.

For service information identified in this proposed AD, contact Bombardier, Inc., 400 Côte-Vertu Road West, Dorval, Québec H4S 1Y9, Canada; telephone 514–855–5000; fax 514–855–7401; e-mail *thd.crj@aero.bombardier.com;* Internet *http://www.bombardier.com.* You may review copies of the referenced service information at the FAA, Transport Airplane Directorate, 1601 Lind Avenue, SW., Renton, Washington. For information on the availability of this material at the FAA, call 425–227–1221.

Examining the AD Docket

You may examine the AD docket on the Internet at *http://www.regulations.gov;* or in person at the Docket Operations office between 9 a.m. and 5 p.m., Monday through Friday, except Federal holidays. The AD docket contains this proposed AD, the regulatory evaluation, any comments received, and other information. The street address for the Docket Operations office (telephone (800) 647–5527) is in the **ADDRESSES** section. Comments will be available in the AD docket shortly after receipt.

FOR FURTHER INFORMATION CONTACT: Christopher Alfano, Aerospace Engineer, Airframe and Mechanical Systems Branch, ANE–171, FAA, New York Aircraft Certification Office, 1600 Stewart Avenue, Suite 410, Westbury, New York 11590; telephone (516) 228–7340; fax (516) 794–5531.

SUPPLEMENTARY INFORMATION:

Comments Invited

We invite you to send any written relevant data, views, or arguments about this proposed AD. Send your comments to an address listed under the **ADDRESSES** section. Include "Docket No. FAA–2010–0548; Directorate Identifier 2010–NM–041–AD" at the beginning of your comments. We specifically invite comments on the overall regulatory, economic, environmental, and energy aspects of this proposed AD. We will consider all comments received by the closing date and may amend this proposed AD based on those comments.

We have lengthened the 30-day comment period for proposed ADs that address MCAI originated by aviation authorities of other countries to provide adequate time for interested parties to submit comments. The comment period for these proposed ADs is now typically 45 days, which is consistent with the comment period for domestic transport ADs.

We will post all comments we receive, without change, to *http://www.regulations.gov,* including any personal information you provide. We will also post a report summarizing each substantive verbal contact we receive about this proposed AD.

Discussion

Transport Canada Civil Aviation (TCCA), which is the aviation authority for Canada, has issued Canadian Airworthiness Directive CF–2010–01, dated January 18, 2010 (referred to after this as "the MCAI"), to correct an unsafe condition for the specified products. The MCAI states:

Following five reported cases of balance washer screw failure on similar RATs [ram air turbine]/air driven generators installed on other aircraft types, an investigation by Hamilton Sundstrand determined that a specific batch of the screws had a metallographic non-conformity that increased their susceptibility to brittle fracture. Subsequently, it was established that 187 RATs [Part Number (P/N) GL456–1101–7 and Hamilton Sundstrand P/Ns in the 762826 series] had non-conforming screws installed either during production or possibly during maintenance or repair at Hamilton Sundstrand repair stations.

Failure of a balance washer screw can result in loss of the related balance washer, with consequent turbine imbalance. Such imbalance could potentially result in RAT structural failure (including blade failure), loss of RAT electrical power and structural damage to the aircraft and, if deployment was activated by a dual engine shutdown, could also result in loss of hydraulic power for the flight controls [and consequent reduced ability of the flightcrew to maintain the safe flight and landing of the airplane].

This [Canadian] directive mandates checking of the RAT and replacing the balance washer screws, if required. It also prohibits future installation of unmodified RATs.

You may obtain further information by examining the MCAI in the AD docket.

Relevant Service Information

Bombardier has issued Service Bulletins 700–24–075 and 700–1A11–24–014, both Revision 01, both dated July 15, 2009. The actions described in this service information are intended to correct the unsafe condition identified in the MCAI.

FAA's Determination and Requirements of This Proposed AD

This product has been approved by the aviation authority of another country, and is approved for operation in the United States. Pursuant to our bilateral agreement with the State of Design Authority, we have been notified of the unsafe condition described in the MCAI and service information referenced above. We are proposing this AD because we evaluated all pertinent information and determined an unsafe condition exists and is likely to exist or develop on other products of the same type design.

Differences Between This AD and the MCAI or Service Information

We have reviewed the MCAI and related service information and, in general, agree with their substance. But we might have found it necessary to use different words from those in the MCAI to ensure the AD is clear for U.S. operators and is enforceable. In making these changes, we do not intend to differ substantively from the information provided in the MCAI and related service information.

We might also have proposed different actions in this AD from those in the MCAI in order to follow FAA policies. Any such differences are highlighted in a NOTE within the proposed AD.

Costs of Compliance

Based on the service information, we estimate that this proposed AD would

affect about 115 products of U.S. registry. We also estimate that it would take about 1 work-hour per product to comply with the basic requirements of this proposed AD. The average labor rate is $85 per work-hour. Based on these figures, we estimate the cost of the proposed AD on U.S. operators to be $9,775, or $85 per product.

Authority for This Rulemaking

Title 49 of the United States Code specifies the FAA's authority to issue rules on aviation safety. Subtitle I, section 106, describes the authority of the FAA Administrator. "Subtitle VII: Aviation Programs," describes in more detail the scope of the Agency's authority.

We are issuing this rulemaking under the authority described in "Subtitle VII, Part A, Subpart III, Section 44701: General requirements." Under that section, Congress charges the FAA with promoting safe flight of civil aircraft in air commerce by prescribing regulations for practices, methods, and procedures the Administrator finds necessary for safety in air commerce. This regulation is within the scope of that authority because it addresses an unsafe condition that is likely to exist or develop on products identified in this rulemaking action.

Regulatory Findings

We determined that this proposed AD would not have federalism implications under Executive Order 13132. This proposed AD would not have a substantial direct effect on the States, on the relationship between the national government and the States, or on the distribution of power and responsibilities among the various levels of government.

For the reasons discussed above, I certify this proposed regulation:

1. Is not a "significant regulatory action" under Executive Order 12866;
2. Is not a "significant rule" under the DOT Regulatory Policies and Procedures (44 FR 11034, February 26, 1979); and
3. Will not have a significant economic impact, positive or negative, on a substantial number of small entities under the criteria of the Regulatory Flexibility Act.

We prepared a regulatory evaluation of the estimated costs to comply with this proposed AD and placed it in the AD docket.

List of Subjects in 14 CFR Part 39

Air transportation, Aircraft, Aviation safety, Incorporation by reference, Safety.

The Proposed Amendment

Accordingly, under the authority delegated to me by the Administrator, the FAA proposes to amend 14 CFR part 39 as follows:

PART 39—AIRWORTHINESS DIRECTIVES

1. The authority citation for part 39 continues to read as follows:

Authority: 49 U.S.C. 106(g), 40113, 44701.

§ 39.13 [Amended]

2. The FAA amends § 39.13 by adding the following new AD:

Bombardier, Inc.: Docket No. FAA–2010–0548; Directorate Identifier 2010–NM–041–AD.

Comments Due Date

(a) We must receive comments by July 19, 2010.

Affected ADs

(b) None.

Applicability

(c) This AD applies to Bombardier, Inc. Model BD–700–1A10 and BD–700–1A11 airplanes, serial numbers 9002 and subsequent; certificated in any category.

Subject

(d) Air Transport Association (ATA) of America Code 24: Electrical power.

Reason

(e) The mandatory continuing airworthiness information (MCAI) states:

Following five reported cases of balance washer screw failure on similar RATs [ram air turbines]/air driven generators installed on other aircraft types, an investigation by Hamilton Sundstrand determined that a specific batch of the screws had a metallographic non-conformity that increased their susceptibility to brittle fracture. Subsequently, it was established that 187 RATs [Part Number (P/N) GL456–1101–7 and Hamilton Sundstrand P/Ns in the 762826 series] had non-conforming screws installed either during production or possibly during maintenance or repair at Hamilton Sundstrand repair stations.

Failure of a balance washer screw can result in loss of the related balance washer, with consequent turbine imbalance. Such imbalance could potentially result in RAT structural failure (including blade failure), loss of RAT electrical power and structural damage to the aircraft and, if deployment was activated by a dual engine shutdown, could also result in loss of hydraulic power for the flight controls [and consequent reduced ability of the flightcrew to maintain the safe flight and landing of the airplane].

This [Canadian] directive mandates checking of the RAT and replacing the balance washer screws, if required. It also prohibits future installation of unmodified RATs.

Compliance

(f) You are responsible for having the actions required by this AD performed within the compliance times specified, unless the actions have already been done.

Inspection

(g) For airplanes having serial numbers 9002 through 9380 inclusive: At the earliest of the times identified in paragraphs (g)(1), (g)(2), (g)(3) and (g)(4) of this AD, inspect to determine the serial number of the installed ram air turbine (RAT), in accordance with the Accomplishment Instructions of the applicable service bulletin listed in Table 1 of this AD. This inspection may be conducted visually, which requires lowering the RAT. A review of airplane maintenance records is acceptable in lieu of this inspection if the serial number of the RAT can be conclusively determined from that review.

(1) Within 500 flight hours or 24 months after the effective date of this AD, whichever occurs first; or

(2) Prior to the next in-flight or on-ground functional test of the RAT, whichever occurs first after the effective date of this AD; or

(3) Prior to the next in-flight or on-ground operational test of the RAT, whichever occurs first after the effective date of this AD; or

(4) Prior to the next scheduled RAT in-flight deployment.

(h) If the RAT serial number, as determined in paragraph (g) of this AD, is not listed in paragraph 1.A of the applicable service bulletin listed in Table 1 of this AD, no further action is required by this AD, except for paragraph (j) of this AD.

TABLE 1—SERVICE BULLETINS

Model—	Bombardier Service Bulletin—	Revision—	Dated—
BD–700–1A11	700–1A11–24–014	01	July 15, 2009.
BD–700–1A10	700–24–075	01	July 15, 2009.

(i) If the RAT serial number, determined in paragraph (g) of this AD, is listed in paragraph 1.A. of the applicable service bulletin listed in Table 1 of this AD, before further flight, inspect to determine if the symbol "24–7" is marked on the RAT identification plate, in accordance with the Accomplishment Instructions of the applicable service bulletin listed in Table 1

of this AD. A review of airplane maintenance records is acceptable in lieu of this inspection if the symbol "24–7" mark can be conclusively determined from that review.

(1) If the symbol "24–7" is marked on the RAT identification plate, the balance washer screws have already been replaced and no further action is required by this AD, except for paragraph (j) of this AD.

(2) If the symbol "24–7" is not marked on the RAT identification plate, before further flight, replace all balance washer screws with new balance washer screws, part number MS24667–14, and mark the RAT identification plate with the symbol "24–7," in accordance with the Accomplishment Instructions of the applicable service bulletin listed in Table 1 of this AD.

(j) For all airplanes: As of the effective date of this AD, no person may install on any airplane a replacement or spare RAT (P/N GL456–1101–7; Hamilton Sundstrand P/Ns in the 762826 series) having one of the S/Ns listed in paragraph 1.A. of the applicable service bulletin listed in Table 1 of this AD unless the balance washer screws have already been replaced and the symbol "24–7" is marked on the RAT identification plate.

FAA AD Differences

Note 1: This AD differs from the MCAI and/or service information as follows:

Although Canadian Airworthiness Directive CF–2010–01, dated January 18, 2010, recommends accomplishing the visual inspection prior to the next scheduled in-flight operational test of the RAT, we have determined that interval would not address the identified unsafe condition soon enough to ensure an adequate level of safety for the affected fleet in light of the degree of urgency associated with the subject unsafe condition. This difference has been coordinated with Transport Canada Civil Aviation (TCCA).

Other FAA AD Provisions

(k) The following provisions also apply to this AD:

(1) *Alternative Methods of Compliance (AMOCs):* The Manager, New York Aircraft Certification Office (ACO), ANE–170, FAA, has the authority to approve AMOCs for this AD, if requested using the procedures found in 14 CFR 39.19. Send information to ATTN: Program Manager, Continuing Operational Safety, FAA, New York ACO, 1600 Stewart Avenue, Suite 410, Westbury, New York 11590; telephone 516–228–7300; fax 516–794–5531. Before using any approved AMOC on any airplane to which the AMOC applies, notify your principal maintenance inspector (PMI) or principal avionics inspector (PAI), as appropriate, or lacking a principal inspector, your local Flight Standards District Office. The AMOC approval letter must specifically reference this AD.

(2) *Airworthy Product:* For any requirement in this AD to obtain corrective actions from a manufacturer or other source, use these actions if they are FAA-approved. Corrective actions are considered FAA-approved if they are approved by the State of Design Authority (or their delegated agent). You are required to assure the product is airworthy before it is returned to service.

(3) *Reporting Requirements:* For any reporting requirement in this AD, under the provisions of the Paperwork Reduction Act (44 U.S.C. 3501 *et seq.*), the Office of Management and Budget (OMB) has approved the information collection requirements and has assigned OMB Control Number 2120–0056.

Related Information

(l) Refer to MCAI Transport Canada Civil Aviation (TCCA) Airworthiness Directive CF–2010–01, dated January 18, 2010; and Bombardier Service Bulletins 700–24–075, Revision 01, dated July 15, 2009, and 700–1A11–24–014, Revision 01, dated July 15, 2009; for related information.

Issued in Renton, Washington, on May 28, 2010.

Ali Bahrami,

Manager, Transport Airplane Directorate, Aircraft Certification Service.

[FR Doc. 2010–13419 Filed 6–3–10; 8:45 am]

BILLING CODE 4910–13–P

DEPARTMENT OF TRANSPORTATION

Federal Aviation Administration

14 CFR Part 39

[Docket No. FAA–2010–0260; Directorate Identifier 2010–CE–015–AD]

RIN 2120–AA64

Airworthiness Directives; GROB–WERKE (Type Certificate Previously Held by BURKHART GROB Luft- und Raumfahrt) Models G115C, G115D and G115D2 Airplanes

AGENCY: Federal Aviation Administration (FAA), Department of Transportation (DOT).

ACTION: Supplemental notice of proposed rulemaking (NPRM); reopening of the comment period.

SUMMARY: We are revising an earlier NPRM for the products listed above. This proposed AD results from mandatory continuing airworthiness information (MCAI) originated by an aviation authority of another country to identify and correct an unsafe condition on an aviation product. The MCAI describes the unsafe condition as:

The manufacturer has received a report of a failed canopy jettison test, during a regular maintenance check. The investigation revealed that a cable shroud of the jettison system protruded the canopy structure, which probably caused the malfunction. Inability to jettison the canopy in flight would prevent evacuation of the aeroplane in case of need.

The proposed AD would require actions that are intended to address the unsafe condition described in the MCAI.

DATES: We must receive comments on this proposed AD by July 19, 2010.

ADDRESSES: You may send comments by any of the following methods:

- *Federal eRulemaking Portal:* Go to *http://www.regulations.gov.* Follow the instructions for submitting comments.
- *Fax:* (202) 493–2251.
- *Mail:* U.S. Department of Transportation, Docket Operations, M–30, West Building Ground Floor, Room W12–140, 1200 New Jersey Avenue, SE., Washington, DC 20590.
- *Hand Delivery:* U.S. Department of Transportation, Docket Operations, M–30, West Building Ground Floor, Room W12–140, 1200 New Jersey Avenue, SE., Washington, DC 20590, between 9 a.m. and 5 p.m., Monday through Friday, except Federal holidays.

Examining the AD Docket

You may examine the AD docket on the Internet at *http://www.regulations.gov;* or in person at the Docket Management Facility between 9 a.m. and 5 p.m., Monday through Friday, except Federal holidays. The AD docket contains this proposed AD, the regulatory evaluation, any comments received, and other information. The street address for the Docket Office (telephone (800) 647–5527) is in the **ADDRESSES** section. Comments will be available in the AD docket shortly after receipt.

FOR FURTHER INFORMATION CONTACT: Gregory Davison, Aerospace Engineer, FAA, Small Airplane Directorate, 901 Locust, Room 301, Kansas City, Missouri 64106; telephone: (816) 329–4130; fax: (816) 329–4090.

SUPPLEMENTARY INFORMATION:

Comments Invited

We invite you to send any written relevant data, views, or arguments about this proposed AD. Send your comments to an address listed under the **ADDRESSES** section. Include "Docket No. FAA–2010–0260; Directorate Identifier 2010–CE–015–AD" at the beginning of your comments. We specifically invite comments on the overall regulatory, economic, environmental, and energy aspects of this proposed AD. We will consider all comments received by the closing date and may amend this proposed AD because of those comments.

We will post all comments we receive, without change, to *http://www.regulations.gov,* including any personal information you provide. We will also post a report summarizing each substantive verbal contact we receive about this proposed AD.

Discussion

We proposed to amend 14 CFR part 39 with an earlier NPRM for the

specified products, which was published in the **Federal Register** on March 16, 2010 (75 FR 12466). That earlier NPRM proposed to require actions intended to address the unsafe condition for the products listed above.

Since that NPRM was issued, we have determined that additional actions are necessary in order to eliminate any confusion and to ensure pilot awareness of the unsafe condition. Specifically, we are adding a placard requirement prohibiting aerobatic flight before accomplishing the actions of the proposed AD. Since these actions impose an additional burden over that proposed in the NPRM, we are reopening the comment period to allow the public the chance to comment on these additional actions.

Relevant Service Information

Grob Aircraft AG has issued Service Bulletin No. MSB1078–164, dated July 21, 2009. The actions described in this service information are intended to correct the unsafe condition identified in the MCAI.

FAA's Determination and Requirements of the Proposed AD

This product has been approved by the aviation authority of another country, and is approved for operation in the United States. Pursuant to our bilateral agreement with this State of Design Authority, they have notified us of the unsafe condition described in the MCAI and service information referenced above. We are proposing this AD because we evaluated all information and determined the unsafe condition exists and is likely to exist or develop on other products of the same type design.

Certain changes described above expand the scope of the earlier NPRM. As a result, we have determined that it is necessary to reopen the comment period to provide additional opportunity for the public to comment on the proposed AD.

Differences Between This Proposed AD and the MCAI or Service Information

We have reviewed the MCAI and related service information and, in general, agree with their substance. But we might have found it necessary to use different words from those in the MCAI to ensure the AD is clear for U.S. operators and is enforceable. In making these changes, we do not intend to differ substantively from the information provided in the MCAI and related service information.

We might also have proposed different actions in this AD from those in the MCAI in order to follow FAA policies. Any such differences are highlighted in a NOTE within the proposed AD.

Costs of Compliance

We estimate that this AD will affect 3 products of U.S. registry. We also estimate that it would take about 3 work-hours per product to comply with the basic requirements of this proposed AD. The average labor rate is $85 per work-hour.

Based on these figures, we estimate the cost of the proposed AD on U.S. operators to be $765 or $255 per product.

In addition, we estimate that any necessary follow-on actions would take about 3 work-hours and require parts costing $68, for a cost of $323 per product. We have no way of determining the number of products that may need these actions.

Authority for This Rulemaking

Title 49 of the United States Code specifies the FAA's authority to issue rules on aviation safety. Subtitle I, section 106, describes the authority of the FAA Administrator. "Subtitle VII: Aviation Programs," describes in more detail the scope of the Agency's authority.

We are issuing this rulemaking under the authority described in "Subtitle VII, Part A, Subpart III, Section 44701: General requirements." Under that section, Congress charges the FAA with promoting safe flight of civil aircraft in air commerce by prescribing regulations for practices, methods, and procedures the Administrator finds necessary for safety in air commerce. This regulation is within the scope of that authority because it addresses an unsafe condition that is likely to exist or develop on products identified in this rulemaking action.

Regulatory Findings

We determined that this proposed AD would not have federalism implications under Executive Order 13132. This proposed AD would not have a substantial direct effect on the States, on the relationship between the national Government and the States, or on the distribution of power and responsibilities among the various levels of government.

For the reasons discussed above, I certify this proposed regulation:

1. Is not a "significant regulatory action" under Executive Order 12866;

2. Is not a "significant rule" under the DOT Regulatory Policies and Procedures (44 FR 11034, February 26, 1979); and

3. Will not have a significant economic impact, positive or negative, on a substantial number of small entities under the criteria of the Regulatory Flexibility Act.

We prepared a regulatory evaluation of the estimated costs to comply with this proposed AD and placed it in the AD docket.

List of Subjects in 14 CFR Part 39

Air transportation, Aircraft, Aviation safety, Safety.

The Proposed Amendment

Accordingly, under the authority delegated to me by the Administrator, the FAA proposes to amend 14 CFR part 39 as follows:

PART 39—AIRWORTHINESS DIRECTIVES

1. The authority citation for part 39 continues to read as follows:

Authority: 49 U.S.C. 106(g), 40113, 44701.

§ 39.13 [Amended]

2. The FAA amends § 39.13 by adding the following new AD:

GROB–WERKE (Type Certificate Previously Held by BURKHART GROB Luft- und Raumfahrt): Docket No. FAA–2010–0260; Directorate Identifier 2010–CE–015–AD.

Comments Due Date

(a) We must receive comments by July 19, 2010.

Affected ADs

(b) None.

Applicability

(c) This AD applies to Models G115C, G115D, and G115D2 airplanes, all serial numbers, certificated in any category.

Subject

(d) Air Transport Association of America (ATA) Code 52: Doors.

Reason

(e) The mandatory continuing airworthiness information (MCAI) states:

The manufacturer has received a report of a failed canopy jettison test, during a regular maintenance check. The investigation revealed that a cable shroud of the jettison system protruded the canopy structure, which probably caused the malfunction. Inability to jettison the canopy in flight would prevent evacuation of the aeroplane in case of need.

For the reason stated above, this AD mandates an additional one time canopy jettison test and repair if necessary.

Actions and Compliance

(f) Unless already done, do the following actions:

(1) Before further flight after the effective date of this AD, fabricate a placard (using at least ⅛-inch letters) with the following words and install the placard on the

instrument panel within the pilot's clear view: "AEROBATIC FLIGHT PROHIBITED."

(2) Before the next aerobatic flight after the effective date of this AD, do a canopy jettison test following Grob Aircraft AG Service Bulletin No. MSB1078–164, dated July 21, 2009.

(3) If the canopy jettison fails the test required in paragraph (f)(2) of this AD, before further aerobatic flight:

(i) Contact Grob Aircraft AG, Customer Service, 86874 Tussenhausen-Mattsies, Germany, telephone: + 49 (0) 8268–998–105; fax; + 49 (0) 8268–998–200; email: *productsupport@grob-aircraft.com,* for an FAA-approved repair scheme and incorporate the repair scheme; or

(ii) Replace the canopy handle following Grob Aircraft AG Service Bulletin No. MSB1078–164, dated July 21, 2009.

(4) Within 7 days after doing the canopy jettison test required in paragraph (f)(2) of this AD or within 7 days after the effective date of this AD, whichever occurs later, submit a report of the test results using Appendix 1 of Grob Aircraft AG Service Bulletin No. MSB1078–164, dated July 21, 2009, to Grob Aircraft AG at the address specified in paragraph (f)(3)(i) of this AD.

(5) After the corrective actions specified in paragraphs (f)(3)(i) or (f)(3)(ii) are done or if the canopy jettison passed the test required in paragraph (f)(2) of this AD, before further flight, remove the placard that was installed in accordance with paragraph (f)(1) of this AD.

FAA AD Differences

Note: This AD differs from the MCAI and/or service information as follows: The MCAI does not have a placard requirement. To eliminate any confusion and to ensure pilot awareness of the unsafe condition, we added a temporary placard requirement to this AD.

Other FAA AD Provisions

(g) The following provisions also apply to this AD:

(1) Alternative Methods of Compliance (AMOCs): The Manager, Standards Office, FAA, has the authority to approve AMOCs for this AD, if requested using the procedures found in 14 CFR 39.19. Send information to ATTN: Greg Davison, Aerospace Engineer, FAA, Small Airplane Directorate, 901 Locust, Room 301, Kansas City, Missouri 64106; telephone: (816) 329–4130; fax: (816) 329–4090. Before using any approved AMOC on any airplane to which the AMOC applies, notify your appropriate principal inspector (PI) in the FAA Flight Standards District Office (FSDO), or lacking a PI, your local FSDO.

(2) Airworthy Product: For any requirement in this AD to obtain corrective actions from a manufacturer or other source, use these actions if they are FAA-approved. Corrective actions are considered FAA-approved if they are approved by the State of Design Authority (or their delegated agent). You are required to assure the product is airworthy before it is returned to service.

(3) Reporting Requirements: For any reporting requirement in this AD, under the provisions of the Paperwork Reduction Act (44 U.S.C. 3501 *et.seq.*), the Office of Management and Budget (OMB) has approved the information collection requirements and has assigned OMB Control Number 2120–0056.

Related Information

(h) Refer to MCAI European Aviation Safety Agency (EASA) AD No. 2009–0279, dated December 23, 2009; and Grob Aircraft AG Service Bulletin No. MSB1078–164, dated July 21, 2009, for related information.

Issued in Kansas City, Missouri, on May 27, 2010.

Steven W. Thompson,

Acting Manager, Small Airplane Directorate, Aircraft Certification Service.

[FR Doc. 2010–13422 Filed 6–3–10; 8:45 am]

BILLING CODE 4910–13–P

DEPARTMENT OF THE TREASURY

Internal Revenue Service

26 CFR Part 1

[REG–106750–10]

RIN 1545–BJ30

Modifications of Debt Instruments

AGENCY: Internal Revenue Service (IRS), Treasury.

ACTION: Notice of proposed rulemaking and notice of public hearing.

SUMMARY: This document contains proposed regulations relating to the modification of debt instruments. The regulations clarify the extent to which the deterioration in the financial condition of the issuer is taken into account to determine whether a modified debt instrument will be recharacterized as an instrument or property right that is not debt. The regulations provide needed guidance to issuers and holders of debt instruments. This document also provides notice of a public hearing on these proposed regulations.

DATES: Written or electronic comments must be received by August 3, 2010. Outlines of topics to be discussed at the public hearing scheduled for Wednesday, September 8, 2010, at 10 a.m. must be received by Wednesday, August 11, 2010.

ADDRESSES: Send submissions to: CC:PA:LPD:PR (REG–106750–10), room 5205, Internal Revenue Service, P.O. Box 7604, Ben Franklin Station, Washington, DC 20044. Submissions may be hand-delivered Monday through Friday between the hours of 8 a.m. and 4 p.m. to CC:PA:LPD:PR (REG–106750–10), Courier's Desk, Internal Revenue Service, 1111 Constitution Avenue, NW., Washington, DC, or sent electronically, via the Federal eRulemaking Portal at *http://www.regulations.gov* (IRS and REG–106750–10).

FOR FURTHER INFORMATION CONTACT: Concerning the proposed regulations, Diana Imholtz, at (202) 622–3930; concerning submission of comments, the hearing, and/or to be placed on the building access list to attend the hearing, *Richard.A.Hurst@irscounsel.treas.gov*, at (202) 622–7180 (not toll-free numbers).

SUPPLEMENTARY INFORMATION:

Background

Section 1.1001–3 provides rules for determining when a modification of a debt instrument results in an exchange for purposes of § 1.1001–1(a). In general, § 1.1001–3 defines a modification and provides that a modification that is significant results in a deemed exchange of the original debt instrument for a modified debt instrument. Section 1.1001–3 also addresses alterations to the terms of a debt instrument that result in a modified instrument that is not debt. Section 1.1001–3(c)(2)(ii) generally provides that a modification to a debt instrument occurs if an alteration changes the instrument to an instrument or property right that is not debt for Federal income tax purposes, even if the alteration occurs by operation of the original terms of the debt instrument. Section 1.1001–3(e)(5)(i) generally provides that a modification of a debt instrument that results in an instrument or property right that is not debt for Federal income tax purposes is a significant modification. For purposes of making the determination prescribed by § 1.1001–3(e)(5)(i), the regulations state that any deterioration in the financial condition of the issuer between the issue date of the unmodified debt instrument and the date of modification (as it relates to the issuer's obligation to repay the debt instrument) is not taken into account, unless there is a substitution of a new obligor or the addition or deletion of a co-obligor.

In response to the proposed regulations published on December 2, 1992 (57 FR 57034), taxpayers were concerned that taking into account the creditworthiness of a financially troubled issuer when a debt instrument is modified would impose a significant barrier to restructuring distressed debt instruments. The rule in § 1.1001–3(e)(5)(i) to disregard the financial condition of the issuer was intended to address this concern. The preamble to the existing regulations published on

September 24, 1996 (TD 8675; 61 FR 32926) explains that "for purposes of this regulation, unless there is a substitution of a new obligor, any deterioration in the financial condition of the issuer is not considered in determining whether the modified instrument is properly characterized as debt."

The language in the preamble to the existing regulations suggests that for all purposes of § 1.1001–3 the financial deterioration of the issuer is generally not taken into account. Issuers and holders, however, are concerned that, as the existing regulations are currently drafted, a decline in the creditworthiness of the issuer, under certain circumstances, may be taken into account under § 1.1001–3. The uncertainty about the proper interpretation of the existing regulations has led taxpayers to request clarification on the circumstances in which the credit quality of the issuer should be considered in determining the nature of the instrument resulting from an alteration or modification of a debt instrument. Accordingly, the IRS and the Treasury Department believe it is appropriate to propose amendments to § 1.1001–3 to clarify this issue.

Explanation of Provisions

In general, the proposed regulations require an analysis of all of the factors relevant to a debt determination of the modified instrument at the time of an alteration or modification. However, in making this determination for purposes of the regulation, any deterioration in the financial condition of the issuer between the issue date of the debt instrument and the date of the alteration or modification (as it relates to the issuer's ability to repay the debt instrument) is not taken into account, unless there is a substitution of a new obligor or the addition or deletion of a co-obligor.

As noted in this preamble, the proposed regulations clarify that any deterioration in the financial condition of the issuer is generally not taken into account to determine if the modified instrument is debt. For example, under the proposed regulations, any decrease in the fair market value of a debt instrument (whether or not publicly traded) between the issue date of the debt instrument and the date of the alteration or modification is not taken into account to the extent that the decrease in fair market value is attributable to the deterioration in the financial condition of the issuer and not to a modification of the terms of the instrument. Consistent with this rule in the proposed regulations, if a debt instrument is significantly modified and the issue price of the modified debt instrument is determined under § 1.1273–2(b) or (c) (relating to a fair market value issue price for publicly traded debt), then any increased yield on the modified debt instrument attributable to this issue price generally is not taken into account to determine whether the modified debt instrument is debt or some other property right for Federal income tax purposes. However, any portion of the increased yield that is not attributable to a deterioration in the financial condition of the issuer, such as a change in market interest rates, is taken into account.

Proposed Effective Date

The regulations, as proposed, apply to alterations of the terms of a debt instrument on or after the date of publication of the Treasury decision adopting these rules as final regulation in the **Federal Register**. A taxpayer, however, may rely on these amendments for alterations of the terms of a debt instrument occurring before that date.

Special Analyses

It has been determined that this notice of proposed rulemaking is not a significant regulatory action as defined in Executive Order 12866. Therefore, a regulatory assessment is not required. It also has been determined that section 553(b) of the Administrative Procedure Act (5 U.S.C. chapter 5) does not apply to these regulations, and because the regulation does not impose a collection of information on small entities, the Regulatory Flexibility Act (5 U.S.C. chapter 6) does not apply. Pursuant to section 7805(f) of the Internal Revenue Code, this notice of proposed rulemaking has been submitted to the Chief Counsel for Advocacy of the Small Business Administration for comment on its impact on small business.

Comments and Public Hearing

Before these proposed regulations are adopted as final regulations, consideration will be given to any written comments (a signed original and eight (8) copies) or electronic comments that are submitted timely to the IRS. The IRS and the Treasury Department request comments on the clarity of the proposed rules and how they can be made easier to understand. All comments will be available for public inspection and copying.

A public hearing has been scheduled for Wednesday, September 8, 2010, beginning at 10 a.m. in Auditorium, Internal Revenue Building, 1111 Constitution Avenue, NW., Washington, DC. Due to building security procedures, visitors must enter at the Constitution Avenue entrance. In addition, all visitors must present photo identification to enter the building. Because of access restrictions, visitors will not be admitted beyond the immediate entrance area more than 30 minutes before the hearing starts. For information about having your name placed on the building access list to attend the hearing, see the **FOR FURTHER INFORMATION CONTACT** section of this preamble.

The rules of 26 CFR 601.601(a)(3) apply to the hearing. Persons who wish to present oral comments at the hearing must submit electronic or written comments and an outline of the topics to be discussed and the time to be devoted to each topic (signed original and eight (8) copies) by Wednesday, August 11, 2010. A period of 10 minutes will be allotted to each person for making comments. An agenda showing the scheduling of the speakers will be prepared after the deadline for receiving outlines has passed. Copies of the agenda will be available free of charge at the hearing.

Drafting Information

The principal author of these regulations is Diana Imholtz, Office of Associate Chief Counsel (Financial Institutions & Products). However, other personnel from the IRS and the Treasury Department participated in their development.

List of Subjects in 26 CFR Part 1

Income taxes, Reporting and recordkeeping requirements.

Proposed Amendments to the Regulations

Accordingly, 26 CFR part 1 is proposed to be amended as follows:

PART 1—INCOME TAXES

Paragraph 1. The authority citation for part 1 continues to read in part as follows:

Authority: 26 U.S.C. 7805 * * *

Par. 2. Section 1.1001–3 is amended by revising paragraphs (c)(2)(ii), (e)(5)(i) and (h) and adding paragraph (f)(7) to read as follows:

§ 1.1001–3 Modifications of debt instruments.

* * * * *

(c) * * *

(2) * * *

(ii) *Property that is not debt.* An alteration that results in an instrument or property right that is not debt for Federal income tax purposes is a

modification unless the alteration occurs pursuant to a holder's option under the terms of the instrument to convert the instrument into equity of the issuer (notwithstanding paragraph (c)(2)(iii) of this section). The rules of paragraph (f)(7) of this section apply to determine whether an alteration or modification results in an instrument or property right that is not debt.

* * * * *

(e) * * *

(5) *Changes in the nature of a debt instrument*—(i) *Property that is not debt.* A modification of a debt instrument that results in an instrument or property right that is not debt for Federal income tax purposes is a significant modification. The rules of paragraph (f)(7) of this section apply to determine whether a modification results in an instrument or property right that is not debt.

* * * * *

(f) * * *

(7) *Rules for determining whether an alteration or modification results in an instrument or property right that is not debt*—(i) *In general.* Except as provided in paragraph (f)(7)(ii) of this section, the determination of whether an instrument resulting from an alteration or modification of a debt instrument will be recharacterized as an instrument or property right that is not debt for Federal income tax purposes shall take into account all of the factors relevant to such a determination.

(ii) *Financial condition of the obligor*—(A) *Deterioration in financial condition of the obligor generally disregarded.* Except as provided in paragraph (f)(7)(ii)(B) of this section, in making a determination as to whether an instrument resulting from an alteration or modification of a debt instrument will be recharacterized as an instrument or property right that is not debt under this section, any deterioration in the financial condition of the obligor between the issue date of the debt instrument and the date of the alteration or modification (as it relates to the obligor's ability to repay the debt instrument) is not taken into account. For example, any decrease in the fair market value of a debt instrument (whether or not the debt instrument is publicly traded) between the issue date of the debt instrument and the date of the alteration or modification is not taken into account to the extent that the decrease in fair market value is attributable to the deterioration in the financial condition of the obligor and not to a modification of the terms of the instrument.

(B) *Substitution of a new obligor; addition or deletion of co-obligor.* If there is a substitution of a new obligor or the addition or deletion of a co-obligor, the rules in paragraph (f)(7)(ii)(A) of this section do not apply.

* * * * *

(h) *Effective/applicability date*—(1) *In general.* Except as otherwise provided in paragraph (h)(2) of this section, this section applies to alterations of the terms of a debt instrument on or after September 24, 1996. Taxpayers, however, may rely on this section for alterations of the terms of a debt instrument after December 2, 1992, and before September 24, 1996.

(2) *Exception.* Paragraph (f)(7) of this section applies to an alteration of the terms of a debt instrument on or after the date of publication of the Treasury decision adopting these rules as final regulation in the **Federal Register**. A taxpayer, however, may rely on paragraph (f)(7) of this section for alterations of the terms of a debt instrument occurring before that date.

Steven T. Miller,

Deputy Commissioner for Services and Enforcement.

[FR Doc. 2010–13492 Filed 6–3–10; 8:45 am]

BILLING CODE 4830–01–P

ENVIRONMENTAL PROTECTION AGENCY

40 CFR Part 7

[EPA–HQ–OA–2004–0002; FRL–9159–1]

RIN 2090–AA37

Nondiscrimination on the Basis of Age in Programs or Activities Receiving Federal Assistance From the Environmental Protection Agency

AGENCY: Environmental Protection Agency (EPA).

ACTION: Proposed rule.

SUMMARY: EPA is proposing to take action on Nondiscrimination on the Basis of Age in Programs or Activities Receiving Federal Assistance from the Environmental Protection Agency. This document sets out EPA rules for implementing the Age Discrimination Act of 1975, as amended. The Act prohibits discrimination on the basis of age in programs or activities receiving Federal assistance.

DATES: Comments must be received on or before August 3, 2010.

ADDRESSES: Submit your comments, identified by Docket ID No. EPA–HQ–OA–2004–0002, by mail to OEI Docket, U.S. EPA, Mail Code: 28221T, 1200 Pennsylvania Ave., NW, Washington, DC 20460. Comments can also be submitted electronically or through hand delivery/courier by following the detailed instructions in the **ADDRESSES** section of the direct final rule located in the "Rules and Regulations" section of this **Federal Register**.

FOR FURTHER INFORMATION CONTACT: Tom Walker, U.S. Environmental Protection Agency, Office of Civil Rights, (Mail Code 1201A), 1200 Pennsylvania Ave., NW., Washington, DC 20460, telephone (202) 343–9894.

SUPPLEMENTARY INFORMATION:

Why is EPA Issuing This Proposed Rule?

This document proposes to take action on Nondiscrimination on the Basis of Age in Programs or Activities Receiving Federal Assistance from the Environmental Protection Agency. We have published a direct final rule approving regulations for implementing the Age Discrimination Act of 1975, as amended, which prohibits discrimination on the basis of age in programs or activities receiving Federal assistance in the "Rules and Regulations" section of this **Federal Register** because we view this as a noncontroversial action and anticipate no adverse comment. We have explained our reasons for this action in the preamble to the direct final rule.

If we receive no adverse comment, we will not take further action on this proposed rule. If we receive adverse comment, we will withdraw the direct final rule and it will not take effect. We would address all public comments in any subsequent final rule based on this proposed rule.

We do not intend to institute a second comment period on this action. Any parties interested in commenting must do so at this time. For further information, please see the information provided in the **ADDRESSES** section of this document.

I. General Information

These regulations implement provisions of the Age Discrimination Act of 1975, as amended. The Age Discrimination Act of 1975, 42 U.S.C. 6101 *et seq.,* (The Act) prohibits discrimination on the basis of age in programs or activities receiving Federal assistance. The Act applies to persons of all ages. The Act also contains specific exceptions that permit the use of certain age distinctions and factors other than age that meet the Act's requirements. The Act however, does not cover employment discrimination on the basis of age. The Age Discrimination in

Employment Act of 1967, 29 U.S.C. 621 *et. seq.,* (ADEA) applies specifically to employment practices and programs, both in the public and private sectors, and applies only to persons 40 and over. Complaints of employment discrimination based on age against an individual by recipients of federal financial assistance are subject to the ADEA and should be filed administratively with the Equal Employment Opportunity Commission (EEOC) (see 29 CFR part 1626). The EEOC has recently published in the **Federal Register** a Notice of Proposed Rulemaking (NPRM) under the authority of the ADEA (*see* 75 FR 7212 (Feb. 18, 2010)). EEOC's NPRM defines the term "reasonable factors other than age" (RFOA) under the ADEA, a term that is also used in the Age Discrimination Act and in the subject regulation. Because of the different statutory bases for the two regulations, the use of the term RFOA in EPA's regulation implementing the Age Discrimination Act has no effect on EEOC's regulation under the ADEA and the use of the term RFOA in EEOC's regulation has no effect on EPA's regulation. Nonetheless, EPA would accept comments about any potential impact of EEOC's definition on EPA's regulation. Parties interested in the ADEA action should refer to the **Federal Register;** 75 FR 7212 (Feb. 18, 2010).

The Act required the former Department of Health, Education, and Welfare (HEW) to issue general, government-wide regulations setting standards to be followed by all Federal agencies implementing the Act. These government-wide regulations, which were issued on June 12, 1979, (45 CFR part 90; 44 FR 33768) and became effective on July 1, 1979, required each Federal agency providing assistance to any program or activity to publish final regulations implementing the Act, and to submit final agency regulations to HEW (now the Department of Health and Human Services (HHS)), before publication in the **Federal Register.** (*See* 45 CFR 90.31.) The Act became effective on the effective date of HEW's final government-wide regulations (*i.e.,* July 1, 1979). The Act was amended by the Civil Rights Restoration Act of 1987, Public Law 100–259, 102 Stat. 28, to add a definition for the term "program or activity."

The Age discrimination regulations apply to all applicants for, and recipients of, EPA assistance in the operation of their programs or activities, and only establish and enforce statutory rights that prohibit discrimination on the basis of age. These regulations do not apply to any program or activity unless that program or activity applies for and/or receives Federal assistance from the Agency.

EPA's Age discrimination regulations which implement the Age Discrimination Act of 1975, will amend the U.S. Code of Federal Regulations (40 CFR Part 7) by adding Age as a protected classification to the Agency's nondiscrimination regulations. Currently, the Agency's nondiscrimination regulations prohibit discrimination on the basis of race, color, national origin, sex (gender), or disability in any program or activity receiving EPA assistance. The Age Discrimination regulations will become the new Part 7 Subpart F—Discrimination Prohibited on the Basis of Age.

The regulation states, "No person in the United States may, on the basis of age, be excluded from participation in, be denied the benefits of, or be subjected to discrimination under any program or activity receiving EPA assistance." (40 CFR 7.140) The specific prohibited actions are patterned after the regulations issued under Title VI of the Civil Rights Act of 1964 (40 CFR 7.30). As a general rule, separate or different treatment which denies or limits services from, or participation in, a program receiving Federal funds will be prohibited by these regulations.

The Act does include some exceptions to the general rule against age discrimination. The regulations provide definitions for two terms "normal operations" and "statutory objective" (40 CFR 7.25) that provide the framework for which the exceptions can apply. (40 CFR 7.150) For example, the normal operations and objectives of our public schools are to educate our nation's children. Public schools, for instance, have received federal environmental grants, to establish ecology clubs or educate students on water restoration and beach ecology. These school programs are just a few examples of recipients operating under normal conditions and meeting their objectives while receiving federal assistance targeted at a specific age group, and are therefore, permissible under the Act.

Recipients of EPA funds are also permitted to take an action otherwise prohibited by the Act, if the action is based on "reasonable factors other than age." (40 CFR 7.155) For example, children may be more vulnerable to environmental exposures (*i.e.* lead poisoning) than adults because their bodily systems are still developing. Providing grants to recipients to research these specific exposure risks in children play an important role in protecting children's health. Even though environmental toxins may also affect adults, it is thought that children are generally more vulnerable to such environmental exposures. Thus, recipients that are solely studying the unique environmental exposure risks to children (targeting a specific age group) are taking actions based on "reasonable factors other than age", and, such studies are therefore permissible under the Act. As noted above, the use of the term "reasonable factors other than age" in EPA's regulation has no effect on EEOC's RFOA definition under the ADEA and, conversely, the use of the term RFOA by the EEOC has no effect on EPA's regulation.

In addition, these regulations incorporate the provisions of the general regulations (45 CFR part 90; 44 FR 33768) permitting a recipient of a program to provide special benefits for children and the elderly. (40 CFR 7.165) These special benefits often take the form of special discounts or reduced fees for the elderly or children in a federally funded program.

II. Rulemaking History

EPA first proposed regulations implementing the Age Discrimination Act as part of its proposed consolidated nondiscrimination regulations on January 8, 1981 (46 FR 2306–2312). The Age Discrimination Act provisions were not included in the final rule published on January 12, 1984 (49 FR 1656–66), because they had not been approved by HHS as required by the Act. During 1993 through 1998, the regulations were submitted to HHS and went through different revisions in an on-going effort between EPA and HHS. Because of the time lapse since the regulations were initially drafted, in 2002 EPA had conducted an internal re-review of the draft regulations. The draft Age Discrimination Act regulations were then resubmitted to HHS in 2002, which granted its approval later that year. In January 2003, new regulatory development guidelines were issued, which spurred another delay in the publication of EPA's draft Age regulations. Between 2003 and 2004, EPA's internal re-review resulted in various revisions to the draft regulations based on the new regulatory development guidelines. In 2005, EPA resubmitted its final draft Age discrimination regulations to HHS. The revised regulations were subsequently approved by HHS in 2006. EPA is now publishing these regulations as a direct final rule along, with a parallel proposed rule. Any comments submitted during the 1981, public comment period pertaining to the Age provisions of the consolidated

nondiscrimination regulations are no longer available for viewing. Comments on the current rule are welcome. If we receive comment on the current rule, we will withdraw the direct final rule and it will not take effect. We would address all public comments in any subsequent final rule based on this proposed rule as mentioned above.

III. Statutory and Executive Orders Reviews

A. Executive Order 12866: Regulatory Planning and Review

Under Executive Order (EO) 12866 (58 FR 51735, October 4, 1993), this action is a "significant regulatory action." Accordingly, EPA submitted this action to the Office of Management and Budget (OMB) for review under EO 12866 and any changes made in response to OMB recommendations have been documented in the docket for this action.

B. Paperwork Reduction Act of 1995

This action does not impose any new information collection burden. EPA Form 4700–4 (Preaward Compliance Review Report for All Applicants Requesting Federal Financial Assistance), which is used to collect compliance information under EPA's nondiscrimination regulations, already requests civil rights compliance information based on age under the Age Discrimination Act of 1975. The current version, which also requests civil rights compliance information based on race, color, national origin, sex, or handicap as well as age, has been in use since January 1990. The Office of Management and Budget (OMB) has previously approved the information collection requirements contained in the existing regulations at 40 CFR part 7 under the provisions of the *Paperwork Reduction Act,* 44 U.S.C. 3501 *et seq.* and has assigned OMB control number 2030–0020. The OMB control numbers for EPA's regulations in 40 CFR are listed in 40 CFR part 9.

C. Regulatory Flexibility Act (RFA)

The RFA generally requires an agency to prepare a regulatory flexibility analysis of any rule subject to notice and comment rulemaking requirements under the Administrative Procedure Act or any other statute unless the agency certifies that the rule will not have a significant economic impact on a substantial number of small entities. Small entities include small businesses, small organizations, and small governmental jurisdictions.

For purposes of assessing the impacts of today's rule on small entities, small entity is defined as: (1) A small business as defined by the U.S. Small Business Administration in 13 CFR 121.201; (2) a small governmental jurisdiction that is a government of a city, county, town, school district or special district with a population of less than 50,000; and (3) a small organization that is any not-for-profit enterprise which is independently owned and operated and is not dominant in its field.

After considering the economic impacts of today's proposed rule on small entities, I certify that this action will not have a significant economic impact on a substantial number of small entities.

This proposed rule will not impose any requirements on small entities because it only formalizes existing requirements for entities receiving assistance from EPA and would not substantively change existing obligations on recipients. The requirements prohibiting age discrimination by recipients of Federal assistance that are in the Age Discrimination Act and the government-wide regulations have been in effect since 1979. We continue to be interested in the potential impacts of the proposed rule on small entities and welcome comments on issues related to such impacts.

D. Unfunded Mandates Reform Act of 1995

Title II of the Unfunded Mandates Reform Act of 1995 (UMRA), Public Law 104–4, establishes requirements for Federal agencies to assess the effects of their regulatory actions on State, local, and tribal governments and the private sector. Under section 202 of the UMRA, EPA generally must prepare a written statement, including a cost-benefit analysis, for proposed and final rules with "Federal mandates" that may result in expenditures to State, local, and tribal governments, in the aggregate, or to the private sector, of $100 million or more in any one year. Before promulgating an EPA rule for which a written statement is needed, section 205 of the UMRA generally requires EPA to identify and consider a reasonable number of regulatory alternatives and adopt the least costly, most cost-effective or least burdensome alternative that achieves the objectives of the rule. The provisions of section 205 do not apply when they are inconsistent with applicable law. Moreover, section 205 allows EPA to adopt an alternative other than the least costly, most cost-effective or least burdensome alternative if the Administrator publishes with the final rule an explanation why that alternative was not adopted. Before EPA establishes any regulatory requirements that may significantly or uniquely affect small governments, including tribal governments, it must have developed under section 203 of the UMRA a small government agency plan. The plan must provide for notifying potentially affected small governments, enabling officials of affected small governments to have meaningful and timely input in the development of EPA regulatory proposals with significant Federal intergovernmental mandates, and informing, educating, and advising small governments on compliance with the regulatory requirements.

Today's rule contains no Federal mandates under the regulatory provisions of Title II of the UMRA for State, local, or tribal governments or the private sector for the following reasons: (1) The UMRA excludes from the definitions of "Federal intergovernmental mandate" and "Federal private sector mandate" duties that arise from conditions of Federal assistance; (2) The UMRA generally excludes from the definition of "Federal intergovernmental mandate" duties that arise from participation in a voluntary Federal program; (3) The UMRA excludes from the definition of "Federal private sector mandate" duties that arise from participation in a voluntary Federal program; and (4) The UMRA does not apply to rules that establish or enforce statutory rights that prohibit discrimination on the basis of race, color, religion, sex, national origin, age, handicap, or disability. These regulations were mandated by Congress in the Act. These regulations only establish and enforce statutory rights that prohibit discrimination on the basis of age. These regulations do not apply to any program or activity unless that program or activity applies for and receives Federal assistance from the Agency. Application for, and receipt of, Federal assistance from the Agency is entirely voluntary. No program or activity is required to apply for, or accept, Federal assistance from the Agency. Thus, today's rule is not subject to the requirements of sections 202 and 205 of the UMRA.

EPA has determined that this rule contains no regulatory requirements that might significantly or uniquely affect small governments. These regulations apply uniformly to all recipients of Federal assistance from the Agency, regardless of whether the recipient is a small government. Moreover, the application for, and acceptance of, Federal assistance from the Agency that triggers the applicability of these regulations is entirely voluntary. Furthermore, it has already been

determined that these regulations will not have a significant economic impact on small entities.

E. Executive Order 13132: Federalism

Executive Order 13132 (64 FR 43255), entitled "Federalism," requires EPA to develop an accountable process to ensure "meaningful and timely input by State and local officials in the development of regulatory policies that have federalism implications." "Policies that have federalism implications" is defined in the Executive Order to include regulations that have "substantial direct effects on the States, on the relationship between the national government and the States, or on the distribution of power and responsibilities among the various levels of government."

This proposed rule does not have federalism implications. It will not have substantial direct effects on the States, on the relationship between the national government and the States, or on the distribution of power and responsibilities among the various levels of government, as specified in Executive Order 13132. This rule does not directly impose any obligations on the States and there are no significant compliance costs associated with it. This rule only applies to State and non-State entities that apply for and receive assistance from EPA. When the recipient receives the EPA assistance, they accept the obligation to comply with EPA's Age Discrimination Act implementing regulations. Compliance obligations are, therefore, voluntary and contractual. No entity is required to apply for or accept EPA assistance. Thus, Executive Order 13132 does not apply to this rule.

In the spirit of Executive Order 13132, and consistent with EPA policy to promote communications between EPA and State and local governments, EPA specifically solicits comment on this proposed rule from State and local officials.

F. Executive Order 13175: Consultation and Coordination With Indian Tribal Governments

Executive Order 13175 (65 FR 67249), entitled "Consultation and Coordination with Indian Tribal Governments," requires EPA to develop an accountable process to ensure "meaningful and timely input by tribal officials in the development of regulatory policies that have tribal implications." This proposed rule does not have tribal implications, as specified in Executive Order 13175. This rule does not directly impose any obligations on the Tribes and there are no significant compliance costs associated with it. This rule only applies to Tribal and non-Tribal entities that apply for and receive assistance from EPA. When the recipient receives the EPA assistance, it accepts the obligation to comply with EPA's Age Discrimination Act implementing regulations. Compliance obligations are, therefore, voluntary and contractual. No entity is required to apply for or accept EPA assistance. Thus, Executive Order 13175 does not apply to this rule. EPA specifically solicits additional comment on this proposed rule from tribal officials.

G. Executive Order 13045: Protection of Children From Environmental Health & Safety Risks

Executive Order 13045 (62 FR 19885), "Protection of Children from Environmental Health Risks and Safety Risks," applies to any rule that: (1) Is determined to be "economically significant" as defined under Executive Order 12866, and (2) concerns an environmental health or safety risk that EPA has reason to believe may have a disproportionate effect on children. If the regulatory action meets both criteria, the Agency must evaluate the environmental health or safety effects of the planned rule on children, and explain why the planned regulation is preferable to other potentially effective and reasonably feasible alternatives considered by the Agency.

EPA interprets Executive Order 13045 as applying only to those regulatory actions that are based on health or safety risks, such that the analysis required under section 5–501 of the Order has the potential to influence the regulation. This proposed rule is not subject to Executive Order 13045 because it does not establish an environmental standard intended to mitigate health or safety risks.

H. Executive Order 13211: Actions that Significantly Affect Energy Supply, Distribution, or Use

This rule is not a "significant energy action" as defined in Executive Order 13211, "Actions Concerning Regulations That Significantly Affect Energy Supply, Distribution, or Use" (66 FR 28355 (May 22, 2001)) because it is not likely to have a significant adverse effect on the supply, distribution, or use of energy. EPA is proposing to approve rules for implementing the Age Discrimination Act of 1975, as amended. The Act prohibits discrimination on the basis of age in programs or activities receiving Federal assistance. Accordingly, we have concluded that this rule is not likely to have any adverse energy effects.

I. National Technology Transfer and Advancement Act

Section 12(d) of the National Technology Transfer and Advancement Act of 1995 ("NTTAA"), Public Law 104–113, 12(d) (15 U.S.C. 272 n) directs EPA to use voluntary consensus standards in its regulatory activities unless to do so would be inconsistent with applicable law or otherwise impractical. Voluntary consensus standards are technical standards (*e.g.,* materials specifications, test methods, sampling procedures, and business practices) that are developed or adopted by voluntary consensus standards bodies. The NTTAA directs EPA to provide Congress, through OMB, explanations when the Agency decides not to use available and applicable voluntary consensus standards. This proposed rulemaking does not involve technical standards. Therefore, EPA is not considering the use of any voluntary consensus standards.

J. Executive Order 12898: Federal Actions To Address Environmental Justice in Minority Populations and Low-Income Populations

Executive Order 12898 (59 FR 7629 (Feb. 16, 1994)) establishes federal executive policy on environmental justice. Its main provision directs federal agencies, to the greatest extent practicable and permitted by law, to make environmental justice part of their mission by identifying and addressing, as appropriate, disproportionately high and adverse human health or environmental effects of their programs, policies, and activities on minority populations and low-income populations in the United States.

EPA has determined that this proposed rule will not have disproportionately high and adverse human health or environmental effects on minority or low-income populations because it does not affect the level of protection provided to human health or the environment. EPA is proposing to approve rules for implementing the Age Discrimination Act of 1975, as amended. The Act prohibits discrimination on the basis of age in programs or activities receiving Federal assistance. This rule does not adversely affect minority or low-income populations therefore, we have concluded that this rule will not have disproportionately high and adverse human health or environmental effects on minority or low-income populations.

List of Subjects in 40 CFR Part 7

Environmental protection, Administrative practice and procedure,

Age discrimination, Civil rights, Equal employment opportunity, Individuals with disabilities, Reporting and recordkeeping requirements, Sex discrimination.

Dated: May 27, 2010.

Lisa P. Jackson,

Administrator.

[FR Doc. 2010–13469 Filed 6–3–10; 8:45 am]

BILLING CODE 6560–50–P

Notices

Federal Register
Vol. 75, No. 107
Friday, June 4, 2010

This section of the FEDERAL REGISTER contains documents other than rules or proposed rules that are applicable to the public. Notices of hearings and investigations, committee meetings, agency decisions and rulings, delegations of authority, filing of petitions and applications and agency statements of organization and functions are examples of documents appearing in this section.

DEPARTMENT OF AGRICULTURE

Animal and Plant Health Inspection Service

[Docket No. APHIS-2010-0016]

Notice of Request for Extension of Approval of an Information Collection; Brucellosis in Sheep, Goats, and Horses; Payment of Indemnity

AGENCY: Animal and Plant Health Inspection Service, USDA.

ACTION: Extension of approval of an information collection; comment request.

SUMMARY: In accordance with the Paperwork Reduction Act of 1995, this notice announces the Animal and Plant Health Inspection Service's intention to request an extension of approval of an information collection associated with regulations for the payment of indemnity for sheep, goats, and horses destroyed because of brucellosis.

DATES: We will consider all comments that we receive on or before **August 3, 2010**.

ADDRESSES: You may submit comments by either of the following methods:

- Federal eRulemaking Portal: Go to (*http://www.regulations.gov/fdmspublic/component/main?main=DocketDetail&d=APHIS-2010-0016*) to submit or view comments and to view supporting and related materials available electronically.
- Postal Mail/Commercial Delivery: Please send one copy of your comment to Docket No. APHIS-2010-0016, Regulatory Analysis and Development, PPD, APHIS, Station 3A-03.8, 4700, River Road Unit 118, Riverdale, MD 20737-1238. Please state that your comment refers to Docket No. APHIS-2010-0016.

Reading Room: You may read any comments that we receive on this docket in our reading room. The reading room is located in room 1141 of the USDA South Building, 14th Street and Independence Avenue SW., Washington, DC. Normal reading room hours are 8 a.m. to 4:30 p.m., Monday through Friday, except holidays. To be sure someone is there to help you, please call (202) 690-2817 before coming.

Other Information: Additional information about APHIS and its programs is available on the Internet at (*http://www.aphis.usda.gov*).

FOR FURTHER INFORMATION CONTACT: For information on regulations for the payment of indemnity for sheep, goats, and horses destroyed because of brucellosis, contact Dr. Debra Donch, Brucellosis Program Manager, Ruminant Health Programs, VS, APHIS, 4700 River Road Unit 43, Riverdale, MD 20737; (301) 734-5952. For copies of more detailed information on the information collection, contact Mrs. Celeste Sickles, APHIS' Information Collection Coordinator, at (301) 851-2908.

SUPPLEMENTARY INFORMATION:

Title: Brucellosis in Sheep, Goats, and Horses; Payment of Indemnity.

OMB Number: 0579-0185.

Type of Request: Extension of approval of an information collection.

Abstract: Under the Animal Health Protection Act (7 U.S.C. 8301 *et seq.*), the Animal and Plant Health Inspection Service of the United States Department of Agriculture is authorized, among other things, to prohibit or restrict the importation and interstate movement of animals and animal products to prevent the introduction into and dissemination within the United States of animal diseases and pests and for eradicating such diseases when feasible.

Brucellosis is a contagious disease caused by bacteria of the genus *Brucella* that primarily affects cattle, bison, and swine. It causes the loss of young through spontaneous abortion or birth of weak offspring, reduced milk production, and infertility. The continued presence of brucellosis seriously threatens the health of other animals. Goats, sheep, and horses are also susceptible to *B. abortus*. In horses, the disease is known as fistulous withers. A third strain of *Brucella*, *B. melitensis*, affects mainly goats and sheep.

The regulations in 9 CFR part 51 include an indemnity program for sheep, goats, and horses that must be destroyed because of brucellosis. This indemnity program, which is similar to our indemnity program for cattle and bison, is voluntary and was designed to give producers an incentive to cooperate and assist our ongoing program to eradicate brucellosis in the United States.

The indemnity program for the voluntary depopulation of herds of goats, flocks of sheep, and mixed herds of goats and sheep affected with brucellosis, and individual horses infected with brucellosis involves the use of a number of information collection activities, including the completion of indemnity claims (Veterinary Services (VS) Form 1-23), test records (VS Form 4-33), and permits (VS Form 1-27); the use of official seals and animal identification; the submission of proof of destruction and requests for extension of certain program-related deadlines.

We are asking the Office of Management and Budget (OMB) to approve our use of these information collection activities for an additional 3 years.

The purpose of this notice is to solicit comments from the public (as well as affected agencies) concerning our information collection. These comments will help us:

(1) Evaluate whether the collection of information is necessary for the proper performance of the functions of the Agency, including whether the information will have practical utility;

(2) Evaluate the accuracy of our estimate of the burden of the collection of information, including the validity of the methodology and assumptions used;

(3) Enhance the quality, utility, and clarity of the information to be collected; and

(4) Minimize the burden of the collection of information on those who are to respond, through use, as appropriate, of automated, electronic, mechanical, and other collection technologies; e.g., permitting electronic submission of responses.

Estimate of burden: The public reporting burden for this collection of information is estimated to average 0.6666 hours per response.

Respondents: Eligible owners of sheep, goats, and horses and materials destroyed and claimants for which compensation is sought under the brucellosis indemnity program; and State and accredited veterinarians.

Estimated annual number of respondents: 3.

Estimated annual number of responses per respondent: 4.

Estimated annual number of responses: 12.

Estimated total annual burden on respondents: 8 hours. (Due to averaging, the total annual burden hours may not equal the product of the annual number of responses multiplied by the reporting burden per response.)

All responses to this notice will be summarized and included in the request for OMB approval. All comments will also become a matter of public record.

Done in Washington, DC, this 28th day of May 2010.

Kevin Shea

Acting Administrator, Animal and Plant Health Inspection Service.

[FR Doc. 2010–13450 Filed 6–3–10: 8:45 am]

BILLING CODE: 3410–34–S

DEPARTMENT OF AGRICULTURE

Forest Service

Information Collection; Contract Operations and Administration

AGENCY: Forest Service, USDA.

ACTION: Notice; request for comment.

SUMMARY: In accordance with the Paperwork Reduction Act of 1995, the Forest Service is seeking comments from all interested individuals and organizations on a new information collection, Contract Operations and Administration.

DATES: Comments must be received in writing on or before August 3, 2010 to be assured of consideration. Comments received after that date will be considered to the extent practicable.

ADDRESSES: Comments concerning this notice should be addressed to Lathrop Smith, Natural Resources Research Center, 2150 Centre Avenue, Building A, Suite 341, Fort Collins, CO 80526–8121. Comments also may be submitted via e-mail to: *contractplans@fs.fed.us.*

The public may inspect comments received at the Office of the Director, Forest Management Staff, Forest Service, USDA, Room 3 NW., Yates Building, 1400 Independence Ave., SW., Washington, DC, during normal business hours. Visitors are encouraged to call ahead to 202–205–1496 to facilitate entry to the building.

FOR FURTHER INFORMATION CONTACT: Lathrop Smith, Forest Management, 970–295–5961. Individuals who use telecommunication devices for the deaf (TDD) may call the Federal Relay Service (FRS) at 1–800–877–8339, between 8 a.m. and 8 p.m., Eastern Standard time, Monday through Friday.

SUPPLEMENTARY INFORMATION: *Title:* Contract Operations and Administration.

OMB Number: 0596–NEW.

Expiration Date of Approval: 3 years from OMB approval date.

Type of Request: New.

Abstract: Forest Service contracts for the sale of timber and other forest products are bilateral contracts in which both contracting parties are bound to fulfill obligations reciprocally. By their nature bilateral contracts require both parties to routinely share information and enter into agreements pertaining to operations and performance. Some information collected under Forest Service contracts is required by laws, regulations, and/or timber sale policies. Each contract specifies the information the contractor will be required to provide, including the timing and frequency of the information collection. The inability to collect information required under the terms of a contract could result in delays, disputes, claims, litigation, and/or defaults.

The type and amount of information collected varies depending on the size, complexity, and length of each contract, and external factors such as weather and market conditions. The information collected includes plans, requests, agreements and notices necessary for operations under the terms of the contracts. Forest Service officers collect the information from contractors who may be individuals, private sector businesses, or other government entities. The information is submitted in a variety of formats including Forest Service forms; Government Standard Forms; forms developed by individual contractors, charts, maps, e-mail messages; and letters. Also, to assist small contractors and lessen their burden, individual contracting officers may provide optional forms for some of the information collected. Depending on the purpose of the specific information collection, the information may be submitted by electronic mail, facsimile, conventional mail, or hand delivery.

The information is needed by the Agency for a variety of uses associated with operations and administration of contracts for the sale of timber and other forest products including: (1) Planning and scheduling contract administration workloads, (2) planning and scheduling the delivery of government furnished materials needed by contractors, (3) assuring safety of public in vicinity of contract work, (4) identifying contractor resources that may be used in emergency fire fighting situations, (5) determining contractor eligibility for additional contract time, (6) determining contractor eligibility for redetermining contract rates, (7) monitoring compliance with domestic processing requirements, (8) monitoring compliance with Small Business Administration requirements, (9) processing agreements and modifications, and (10) inspecting and accepting work.

Without accurate information showing when and how a contractor intends to operate, the Forest Service would be hindered in fulfilling its contractual obligations to cooperate with and not hinder performance of the contractors. The inability to obtain accurate and timely information from contractors could lead to serious problems including disruption of operations, disputes, claims, and possible default. In some cases, the Forest Service may be unable to determine if a contractor is eligible for additional contract time or other relief measures authorized under the contract.

The Forest Service desires to combine all information collections associated with operations and administration of contracts for the sale of timber and other forest products into one OMB approval. This new collection includes and combines four related collections currently approved by OMB as follows: 0596–0017 Timber Purchaser's Costs and Sales Data; 0596–0086 Operation Plans; 0596–0167 Urgent Removal of Timber; and 0596–0212 Extension of Timber Sales.

Type of Respondents: Timber sale and forest products contractors.

Estimated Annual Number of Contracts: 3,400.

Estimated Annual Number of Respondents: 1,370.

Estimated Annual Responses: 128,100.

Estimated Annual Number of Responses per Respondent: 93.5.

Estimated Total Annual Burden on Respondents: 40,700 hours.

Estimate of Average Burden per Response: 0.32 hours.

Comment is invited on: (1) Whether this collection of information is necessary for the stated purposes and the proper performance of the functions of the Agency, including whether the information will have practical or scientific utility; (2) the accuracy of the Agency's estimate of the burden of the collection of information, including the validity of the methodology and assumptions used; (3) ways to enhance the quality, utility, and clarity of the information to be collected; and (4) ways to minimize the burden of the

collection of information on respondents, including the use of automated, electronic, mechanical, or other technological collection techniques or other forms of information technology.

All comments received in response to this notice, including names and addresses when provided, will be a matter of public record. Comments will be summarized and included in the request for Office of Management and Budget approval.

Dated: May 27, 2010.

Gloria Manning,

Associate Deputy Chief, National Forest System.

[FR Doc. 2010–13452 Filed 6–3–10; 8:45 am]

BILLING CODE 3410–11–P

DEPARTMENT OF AGRICULTURE

Animal and Plant Health Inspection Service

[Docket No. APHIS-2010-0034]

Notice of Request for Approval of an Information Collection; National Veterinary Services Laboratories Request Forms

AGENCY: Animal and Plant Health Inspection Service, USDA.

ACTION: Approval of an information collection; comment request.

SUMMARY: In accordance with the Paperwork Reduction Act of 1995, this notice announces the Animal and Plant Health Inspection Service's intention to request approval of an information collection associated with the National Veterinary Services Laboratories animal health diagnostic system.

DATES: We will consider all comments that we receive on or before August 3, 2010.

ADDRESSES: You may submit comments by either of the following methods:

- Federal eRulemaking Portal: Go to (*http://www.regulations.gov/fdmspublic/component/main?main=DocketDetail&d=APHIS-2010-0034*) to submit or view comments and to view supporting and related materials available electronically.
- Postal Mail/Commercial Delivery: Please send one copy of your comment to Docket No. APHIS-2010-0034, Regulatory Analysis and Development, PPD, APHIS, Station 3A-03.8, 4700 River Road Unit 118, Riverdale, MD 20737-1238. Please state that your comment refers to Docket No. APHIS-2010-0034.

Reading Room: You may read any comments that we receive on this docket in our reading room. The reading room is located in room 1141 of the USDA South Building, 14th Street and Independence Avenue SW., Washington, DC. Normal reading room hours are 8 a.m. to 4:30 p.m., Monday through Friday, except holidays. To be sure someone is there to help you, please call (202) 690-2817 before coming.

Other Information: Additional information about APHIS and its programs is available on the Internet at (*http://www.aphis.usda.gov*).

FOR FURTHER INFORMATION CONTACT: For information on request forms associated with the National Veterinary Services Laboratories animal health diagnostic system, contact Dr. Nancy Clough, VS, APHIS, 1920 Dayton Avenue, Ames, IA 50010; (515) 337-7989. For copies of more detailed information on the information collection, contact Mrs. Celeste Sickles, APHIS' Information Collection Coordinator, at (301) 851-2908.

SUPPLEMENTARY INFORMATION:

Title: National Veterinary Services Laboratories Request Forms.

OMB Number: 0579-XXXX.

Type of Request: Approval of an information collection.

Abstract: Under the Animal Health Protection Act (7 U.S.C. 8301 *et seq.*), the Animal and Plant Health Inspection Service (APHIS) of the U.S. Department of Agriculture is authorized, among other things, to carry out activities to detect, control, and eradicate pests and diseases of livestock within the United States. To carry out this mission, APHIS' National Veterinary Services Laboratories (NVSL) safeguard U.S animal health and contribute to public health by ensuring that timely and accurate laboratory support is provided by their nationwide animal health diagnostic system.

NVSL support activities provide upon request reagents or supplies and training to domestic and foreign diagnostic laboratories, governments, researchers, and private veterinary practitioners. These activities involve information collection activities, including the VS Form 4-9, Request for Reagents or Supplies; VS Form 4-10, NVSL Customer Contact Update; and VS Form 4-11, Request for NVSL Laboratory Training.

We are asking the Office of Management and Budget (OMB) to approve our use of these information collection activities for 3 years.

The purpose of this notice is to solicit comments from the public (as well as affected agencies) concerning our information collection. These comments will help us:

(1) Evaluate whether the collection of information is necessary for the proper performance of the functions of the Agency, including whether the information will have practical utility;

(2) Evaluate the accuracy of our estimate of the burden of the collection of information, including the validity of the methodology and assumptions used;

(3) Enhance the quality, utility, and clarity of the information to be collected; and

(4) Minimize the burden of the collection of information on those who are to respond, through use, as appropriate, of automated, electronic, mechanical, and other collection technologies; e.g., permitting electronic submission of responses.

Estimate of burden: The public reporting burden for this collection of information is estimated to average 0.2488771 hours per response.

Respondents: Domestic and foreign diagnostic laboratories, governments, researchers, and private veterinary practitioners.

Estimated annual number of respondents: 1,085.

Estimated annual number of responses per respondent: 3.4884792.

Estimated annual number of responses: 3,785.

Estimated total annual burden on respondents: 942 hours. (Due to averaging, the total annual burden hours may not equal the product of the annual number of responses multiplied by the reporting burden per response.)

All responses to this notice will be summarized and included in the request for OMB approval. All comments will also become a matter of public record.

Done in Washington, DC, this 28th day of May 2010.

Kevin Shea

Acting Administrator, Animal and Plant Health Inspection Service.

[FR Doc. 2010–13442 Filed 6–3–10: 8:45 am]

BILLING CODE: 3410–34–S

DEPARTMENT OF AGRICULTURE

Animal and Plant Health Inspection Service

[Docket No. APHIS-2010-0033]

Notice of Request for Extension of Approval of an Information Collection; Importation of Horses, Ruminants, Swine, and Dogs; Inspection and Treatment for Screwworm

AGENCY: Animal and Plant Health Inspection Service, USDA.

ACTION: Extension of approval of an information collection; comment request.

SUMMARY: In accordance with the Paperwork Reduction Act of 1995, this notice announces the Animal and Plant Health Inspection Service's intention to request an extension of approval of an information collection associated with regulations for the importation of horses, ruminants, swine, and dogs from regions of the world where screwworm is considered to exist.

DATES: We will consider all comments that we receive on or before **August 3, 2010**.

ADDRESSES: You may submit comments by either of the following methods:

- Federal eRulemaking Portal: Go to (*http://www.regulations.gov/fdmspublic/component/main?main=DocketDetail&d=APHIS-2010-0033*) to submit or view comments and to view supporting and related materials available electronically.
- Postal Mail/Commercial Delivery: Please send one copy of your comment to Docket No. APHIS-2010-0033, Regulatory Analysis and Development, PPD, APHIS, Station 3A-03.8, 4700 River Road Unit 118, Riverdale, MD 20737-1238. Please state that your comment refers to Docket No. APHIS-2010-0033.

Reading Room: You may read any comments that we receive on this docket in our reading room. The reading room is located in room 1141 of the USDA South Building, 14th Street and Independence Avenue SW., Washington, DC. Normal reading room hours are 8 a.m. to 4:30 p.m., Monday through Friday, except holidays. To be sure someone is there to help you, please call (202) 690-2817 before coming.

Other Information: Additional information about APHIS and its programs is available on the Internet at (*http://www.aphis.usda.gov*).

FOR FURTHER INFORMATION CONTACT: For information on regulations for the importation of horses, ruminants, swine, and dogs from regions of the world where screwworm is considered to exist, contact Dr. Bettina Cooper, Staff Veterinarian, Technical Trade Services Team—Animals, AOVSA, NCIE, VS, APHIS, 4700 River Road Unit 39, Riverdale MD 20737; (301) 734-3400. For copies of more detailed information on the information collection, contact Mrs. Celeste Sickles, APHIS' Information Collection Coordinator, at (301) 851-2908.

SUPPLEMENTARY INFORMATION:

Title: Importation of Horses, Ruminants, Swine, and Dogs; Inspection and Treatment for Screwworm.

OMB Number: 0579-0165.

Type of Request: Extension of approval of an information collection.

Abstract: Under the Animal Health Protection Act (7 U.S.C. 8301 *et seq.*), the Animal and Plant Health Inspection Service (APHIS) regulates the importation and interstate movement of certain animals and animal products to prevent the introduction into or dissemination within the United States of pests and diseases of livestock.

The regulations in 9 CFR part 93 prohibit or restrict the importation of certain animals into the United States to prevent the introduction of communicable diseases of livestock and poultry. Subparts C, D, E, and F of the regulations govern the importation of horses, ruminants, swine, and dogs, respectively, and include provisions for the inspection and treatment of these animals if imported from any region of the world where screwworm is considered to exist. Screwworm is a pest native to tropical areas of South America, the Indian subcontinent, Southeast Asia, tropical and sub-Saharan Africa, and the Arabian peninsula. Screwworm causes extensive damage to livestock and other warmblooded animals.

These regulations involve the use of information collection activities, including an Application for Import or In Transit Permit for horses, ruminants, and swine and a certificate for horses, ruminants, swine, and dogs signed by a full-time salaried veterinary official of the exporting region stating that the animal has been inspected, under certain conditions, and found free of screwworm and, as appropriate, that the animal was treated for screwworm.

We are asking the Office of Management (OMB) to approve our use of these information collection activities for an additional 3 years.

The purpose of this notice is to solicit comments from the public (as well as affected agencies) concerning our information collection. These comments will help us:

(1) Evaluate whether the collection of information is necessary for the proper performance of the functions of the Agency, including whether the information will have practical utility;

(2) Evaluate the accuracy of our estimate of the burden of the collection of information, including the validity of the methodology and assumptions used;

(3) Enhance the quality, utility, and clarity of the information to be collected; and

(4) Minimize the burden of the collection of information on those who are to respond, through use, as appropriate, of automated, electronic, mechanical, and other collection technologies; e.g., permitting electronic submission of responses.

Estimate of burden: The public reporting burden for this collection of information is estimated to average 0.2543103 hours per response.

Respondents: Full-time salaried veterinary officials of exporting regions; importers of horses, ruminants, swine, and dogs.

Estimated annual number of respondents: 83.

Estimated annual number of responses per respondent: 2.7951807.

Estimated annual number of responses: 232.

Estimated total annual burden on respondents: 59 hours. (Due to averaging, the total annual burden hours may not equal the product of the annual number of responses multiplied by the reporting burden per response.)

All responses to this notice will be summarized and included in the request for OMB approval. All comments will also become a matter of public record.

Done in Washington, DC, this 28th day of May 2010.

Kevin Shea

Acting Administrator, Animal and Plant Health Inspection Service.

[FR Doc. 2010–13444 Filed 6–3–10: 8:45 am]

BILLING CODE: 3410–34–S

DEPARTMENT OF AGRICULTURE

Animal and Plant Health Inspection Service

[Docket No. APHIS-2010-0052]

Notice of Request for Extension of Approval of an Information Collection; Importation of Mangoes from the Philippines

AGENCY: Animal and Plant Health Inspection Service, USDA.

ACTION: Extension of approval of an information collection; comment request.

SUMMARY: In accordance with the Paperwork Reduction Act of 1995, this notice announces the Animal and Plant Health Inspection Service's intention to request an extension of approval of an information collection associated with regulations for the importation of mangoes from the Philippines.

DATES: We will consider all comments that we receive on or before **August 3, 2010**.

ADDRESSES: You may submit comments by either of the following methods:

- Federal eRulemaking Portal: Go to (*http://www.regulations.gov/fdmspublic/component/main?main=DocketDetail&d=APHIS-2010-0052*) to submit or view comments and to view supporting and related materials available electronically.
- Postal Mail/Commercial Delivery: Please send one copy of your comment to Docket No. APHIS-2010-0052, Regulatory Analysis and Development, PPD, APHIS, Station 3A-03.8, 4700 River Road Unit 118, Riverdale, MD 20737-1238. Please state that your comment refers to Docket No. APHIS-2010-0052.

Reading Room: You may read any comments that we receive on this docket in our reading room. The reading room is located in room 1141 of the USDA South Building, 14th Street and Independence Avenue SW., Washington, DC. Normal reading room hours are 8 a.m. to 4:30 p.m., Monday through Friday, except holidays. To be sure someone is there to help you, please call (202) 690-2817 before coming.

Other Information: Additional information about APHIS and its programs is available on the Internet at (*http://www.aphis.usda.gov*).

FOR FURTHER INFORMATION CONTACT: For information on regulations for the importation of mangoes from the Philippines, contact Mr. Alex Belano, Branch Chief, Regulations, Permits, and Manuals, PPQ, APHIS, 4700 River Road Unit 133 Riverdale, MD 20737; (301) 734-5333. For copies of more detailed information on the information collection, contact Mrs. Celeste Sickles, APHIS' Information Collection Coordinator, at (301) 851-2908.

SUPPLEMENTARY INFORMATION:

Title: Importation of Mangoes from the Philippines.

OMB Number: 0579-0172.

Type of Request: Extension of approval of an information collection.

Abstract: The Plant Protection Act (PPA, 7 U.S.C. 7701 *et seq.*) authorizes the Secretary of Agriculture to restrict the importation, entry, or interstate movement of plants, plant products, and other articles to prevent the introduction of plant pests into the United States or their dissemination within the United States. Regulations authorized by the PPA concerning the importation of fruits and vegetables into the United States from certain parts of the world are contained in "Subpart—Fruits and Vegetables" (7 CFR 319.56-1 through 319.56-50).

Under these regulations, mangoes from Guimaras Island in the Republic of the Philippines may be imported into the United States only under certain conditions to prevent the introduction of plant pests into the United States. The regulations require information collection activities, including box labeling, phytosanitary certificates with an additional declaration, trust fund agreements, and import permits.

We are asking the Office of Management and Budget (OMB) to approve our use of these information collection activities for an additional 3 years.

The purpose of this notice is to solicit comments from the public (as well as affected agencies) concerning our information collection. These comments will help us:

(1) Evaluate whether the collection of information is necessary for the proper performance of the functions of the Agency, including whether the information will have practical utility;

(2) Evaluate the accuracy of our estimate of the burden of the collection of information, including the validity of the methodology and assumptions used;

(3) Enhance the quality, utility, and clarity of the information to be collected; and

(4) Minimize the burden of the collection of information on those who are to respond, through use, as appropriate, of automated, electronic, mechanical, and other collection technologies; e.g., permitting electronic submission of responses.

Estimate of burden: The public reporting burden for this collection of information is estimated to average 0.662287 hours per response.

Respondents: Philippine plant protection officials; mango producers and packinghouses on Guimaras Island, Philippines.

Estimated annual number of respondents: 1,827.

Estimated annual number of responses per respondent: 1.

Estimated annual number of responses: 1,827.

Estimated total annual burden on respondents: 121 hours. (Due to averaging, the total annual burden hours may not equal the product of the annual number of responses multiplied by the reporting burden per response.)

All responses to this notice will be summarized and included in the request for OMB approval. All comments will also become a matter of public record.

Done in Washington, DC, this 28th day of May 2010.

Kevin Shea

Acting Administrator, Animal and Plant Health Inspection Service.

[FR Doc. 2010–13447 Filed 6–3–10: 8:45 am]

BILLING CODE: 3410–34–S

DEPARTMENT OF AGRICULTURE

Animal and Plant Health Inspection Service

[Docket No. APHIS-2010-0043]

Notice of Request for Extension of Approval of an Information Collection; Interstate Movement of Certain Land Tortoises

AGENCY: Animal and Plant Health Inspection Service, USDA.

ACTION: Extension of approval of an information collection; comment request.

SUMMARY: In accordance with the Paperwork Reduction Act of 1995, this notice announces the Animal and Plant Health Inspection Service's intention to request an extension of approval of an information collection associated with regulations for the interstate movement of certain land tortoises.

DATES: We will consider all comments that we receive on or before **August 3, 2010**.

ADDRESSES: You may submit comments by either of the following methods:

- Federal eRulemaking Portal: Go to (*http://www.regulations.gov/fdmspublic/component/main?main=DocketDetail&d=APHIS-2010-0043*) to submit or view comments and to view supporting and related materials available electronically.
- Postal Mail/Commercial Delivery: Please send one copy of your comment to Docket No. APHIS-2010-0043, Regulatory Analysis and Development, PPD, APHIS, Station 3A-03.8, 4700 River Road Unit 118, Riverdale, MD 20737-1238. Please state that your comment refers to Docket No. APHIS-2010-0043.

Reading Room: You may read any comments that we receive on this docket in our reading room. The reading room is located in room 1141 of the USDA South Building, 14th Street and Independence Avenue SW., Washington, DC. Normal reading room hours are 8 a.m. to 4:30 p.m., Monday through Friday, except holidays. To be sure someone is there to help you, please call (202) 690-2817 before coming.

Other Information: Additional information about APHIS and its programs is available on the Internet at (*http://www.aphis.usda.gov*).

FOR FURTHER INFORMATION CONTACT: For information on regulations for the interstate movement of certain land tortoises, contact Dr. Christa Speekmann, Import-Export Specialist, Technical Trade Services Team—

Animals, AOVSA, NCIE, VS, APHIS, 4700 River Road Unit 39, Riverdale MD 20737; (301) 734-8695. For copies of more detailed information on the information collection, contact Mrs. Celeste Sickles, APHIS' Information Collection Coordinator, at (301) 851-2908.

SUPPLEMENTARY INFORMATION:

Title: Interstate Movement of Certain Land Tortoises.

OMB Number: 0579-0156.

Type of Request: Extension of approval of an information collection.

Abstract: Under the Animal Health Protection Act (7 U.S.C. 8301 *et seq.*), the Animal and Plant Health Inspection Service (APHIS) regulates the importation and interstate movement of certain animals and animal products to prevent the introduction into or dissemination within the United States of pests and diseases of livestock.

The regulations in 9 CFR part 93 prohibit the importation of the leopard tortoise, the African spurred tortoise, and the Bell's hingeback tortoise to prevent the introduction and spread of exotic ticks known to be vectors of heartwater disease, an acute, infectious disease of cattle and other ruminants. The regulations in 9 CFR part 74 prohibit the interstate movement of those tortoises that are already in the United States unless the tortoises are accompanied by a health certificate or certificate of veterinary inspection. The certificate must be signed by an APHIS accredited veterinarian and must state that the tortoises have been examined by that veterinarian and found free of ticks.

We are asking the Office of Management and Budget (OMB) to approve our use of this information collection activity for an additional 3 years.

The purpose of this notice is to solicit comments from the public (as well as affected agencies) concerning our information collection. These comments will help us:

(1) Evaluate whether the collection of information is necessary for the proper performance of the functions of the Agency, including whether the information will have practical utility;

(2) Evaluate the accuracy of our estimate of the burden of the collection of information, including the validity of the methodology and assumptions used;

(3) Enhance the quality, utility, and clarity of the information to be collected; and

(4) Minimize the burden of the collection of information on those who are to respond, through use, as appropriate, of automated, electronic, mechanical, and other collection technologies; e.g., permitting electronic submission of responses.

Estimate of burden: The public reporting burden for this collection of information is estimated to average 2.0 hours per response.

Respondents: APHIS accredited veterinarians, U.S. tortoise breeders, members of tortoise adoption organizations.

Estimated annual number of respondents: 50.

Estimated annual number of responses per respondent: 10.

Estimated annual number of responses: 500.

Estimated total annual burden on respondents: 1,000 hours. (Due to averaging, the total annual burden hours may not equal the product of the annual number of responses multiplied by the reporting burden per response.)

All responses to this notice will be summarized and included in the request for OMB approval. All comments will also become a matter of public record.

Done in Washington, DC, this 28th day of May 2010.

Kevin Shea

Acting Administrator, Animal and Plant Health Inspection Service.

[FR Doc. 2010–13448 Filed 6–3–10: 8:45 am]

BILLING CODE: 3410–34–S

DEPARTMENT OF AGRICULTURE

Animal and Plant Health Inspection Service

[Docket No. APHIS-2010-0053]

Notice of Request for Extension of Approval of an Information Collection; Importation of Artificially Dwarfed Plants

AGENCY: Animal and Plant Health Inspection Service, USDA.

ACTION: Extension of approval of an information collection; comment request.

SUMMARY: In accordance with the Paperwork Reduction Act of 1995, this notice announces the Animal and Plant Health Inspection Service's intention to request an extension of approval of an information collection associated with regulations for the importation of artificially dwarfed plants.

DATES: We will consider all comments that we receive on or before **August 3, 2010**.

ADDRESSES: You may submit comments by either of the following methods:

- Federal eRulemaking Portal: Go to (*http://www.regulations.gov/fdmspublic/component/main?main=DocketDetail&d=APHIS-2010-0053*) to submit or view comments and to view supporting and related materials available electronically.
- Postal Mail/Commercial Delivery: Please send one copy of your comment to Docket No. APHIS-2010-0053, Regulatory Analysis and Development, PPD, APHIS, Station 3A-03.8, 4700 River Road Unit 118, Riverdale, MD 20737-1238. Please state that your comment refers to Docket No. APHIS-2010-0053.

Reading Room: You may read any comments that we receive on this docket in our reading room. The reading room is located in room 1141 of the USDA South Building, 14th Street and Independence Avenue SW., Washington, DC. Normal reading room hours are 8 a.m. to 4:30 p.m., Monday through Friday, except holidays. To be sure someone is there to help you, please call (202) 690-2817 before coming.

Other Information: Additional information about APHIS and its programs is available on the Internet at (*http://www.aphis.usda.gov*).

FOR FURTHER INFORMATION CONTACT: For information on regulations for the importation of artificially dwarfed plants, contact Mr. Gregg B. Goodman, National Postentry Quarantine Coordinator, Quarantine Policy, Analysis, and Support, PHP, PPQ, APHIS, 4700 River Road Unit 60, Riverdale MD 20737; (301) 734-0948. For copies of more detailed information on the information collection, contact Mrs. Celeste Sickles, APHIS' Information Collection Coordinator, at (301) 851-2908.

SUPPLEMENTARY INFORMATION:

Title: Importation of Artificially Dwarfed Plants.

OMB Number: 0579-0176.

Type of Request: Extension of approval of an information collection.

Abstract: Under the Plant Protection Act (7 U.S.C. 7701 *et seq.*), the Secretary of Agriculture is authorized to prohibit or restrict the importation, entry, or interstate movement of plants, plant products, and other articles to prevent the introduction of plant pests into the United States or their dissemination within the United States. This authority has been delegated to the Animal and Plant Health Inspection Service.

The regulations contained in "Subpart–Nursery Stock, Plants, Roots, Bulbs, Seeds, and Other Plant Products" (7 CFR 319.37 through 319.37-14) prohibit or restrict the importation of living plants, plant parts, and seeds for propagation.

Among other things, the regulations require artificially dwarfed plants imported into the United States to be accompanied by a phytosanitary certificate issued by the government of the country of origin. This certificate must contain declarations that certain conditions were met in the country of origin to protect against the infestation of the plants by longhorned beetles and other plant pests.

We are asking the Office of Management and Budget (OMB) to approve our use of these information collection activities for an additional 3 years.

The purpose of this notice is to solicit comments from the public (as well as affected agencies) concerning our information collection. These comments will help us:

(1) Evaluate whether the collection of information is necessary for the proper performance of the functions of the Agency, including whether the information will have practical utility;

(2) Evaluate the accuracy of our estimate of the burden of the collection of information, including the validity of the methodology and assumptions used;

(3) Enhance the quality, utility, and clarity of the information to be collected; and

(4) Minimize the burden of the collection of information on those who are to respond, through use, as appropriate, of automated, electronic, mechanical, and other collection technologies; e.g., permitting electronic submission of responses.

Estimate of burden: The public reporting burden for this collection of information is estimated to average 0.2533333 hours per response.

Respondents: Plant health officials of exporting countries, importers.

Estimated annual number of respondents: 30.

Estimated annual number of responses per respondent: 5.

Estimated annual number of responses: 150.

Estimated total annual burden on respondents: 38 hours. (Due to averaging, the total annual burden hours may not equal the product of the annual number of responses multiplied by the reporting burden per response.)

All responses to this notice will be summarized and included in the request for OMB approval. All comments will also become a matter of public record.

Done in Washington, DC, this 28th day of May 2010.

Kevin Shea

Acting Administrator, Animal and Plant Health Inspection Service.

[FR Doc. 2010–13445 Filed 6–3–10: 8:45 am]

BILLING CODE: 3410–34–S

DEPARTMENT OF AGRICULTURE

Food Safety and Inspection Service

[Docket No. FSIS–2009–0033]

International Standard-Setting Activities

AGENCY: Office of Food Safety, USDA.

ACTION: Notice.

SUMMARY: This notice informs the public of the sanitary and phytosanitary standard-setting activities of the Codex Alimentarius Commission (Codex), in accordance with section 491 of the Trade Agreements Act of 1979, as amended, and the Uruguay Round Agreements Act, Public Law 103–465, 108 Stat. 4809. This notice also provides a list of other standard-setting activities of Codex, including commodity standards, guidelines, codes of practice, and revised texts. This notice, which covers the time periods from June 1, 2009, to May 31, 2010, and June 1, 2010, to May 31, 2011, seeks comments on standards under consideration and recommendations for new standards.

ADDRESSES: Comments may be submitted by either of the following methods:

- *Federal eRulemaking Portal:* This Web site provides the ability to type short comments directly into the comment field on this Web page or attach a file for lengthier comments. Go to *http://www.regulations.gov.* Follow the online instructions at that site for submitting comments.
- *Mail, including diskettes or CD–ROMs, and hand- or courier-delivered items:* Send to Docket Clerk, U.S. Department of Agriculture, Food Safety and Inspection Service, Room 2–2127, George Washington Carver Center, 5601 Sunnyside Avenue, Beltsville, MD 20705.

Instructions: All items submitted by mail or electronic mail must include the Agency name and docket number FSIS–2009–0033. Comments received in response to this docket will be made available for public inspection and posted without change, including any personal information, to *http://www.regulations.gov.*

Docket: For access to comments received, go to the FSIS Docket Room at the address listed above between 8:30 a.m. and 4:30 p.m., Monday through Friday.

Please state that your comments refer to Codex and, if your comments relate to specific Codex committees, please identify those committees in your comments and submit a copy of your comments to the delegate from that particular committee.

FOR FURTHER INFORMATION CONTACT: Karen Stuck, United States Manager for Codex, U.S. Department of Agriculture, Office of Food Safety, Room 4861, South Agriculture Building, 1400 Independence Avenue, SW., Washington, DC 20250–3700; *Phone:* (202) 205–7760; *Fax:* (202) 720–3157; *E-mail: USCodex@fsis.usda.gov.*

For information pertaining to particular committees, the delegate of that committee may be contacted. (A complete list of U.S. delegates and alternate delegates can be found in Attachment 2 to this notice.) Documents pertaining to Codex are accessible via the World Wide Web at the following address: *http://www.codexalimentarius.net/current.asp.* The U.S. Codex Office also maintains a Web site at *http://www.fsis.usda.gov/Regulations_&_Policies/Codex_Alimentarius/index.asp.*

SUPPLEMENTARY INFORMATION:

Background

The World Trade Organization (WTO) was established on January 1, 1995, as the common international institutional framework for the conduct of trade relations among its members in matters related to the Uruguay Round Trade Agreements. The WTO is the successor organization to the General Agreement on Tariffs and Trade (GATT). U.S. membership in the WTO was approved and the Uruguay Round Agreements Act was signed into law by the President on December 8, 1994. The Uruguay Round Agreements became effective, with respect to the United States, on January 1, 1995. Pursuant to section 491 of the Trade Agreements Act of 1979, as amended, the President is required to designate an agency to be "responsible for informing the public of the sanitary and phytosanitary (SPS) standard-setting activities of each international standard-setting organization." The main organizations are Codex, the World Organisation for Animal Health, and the International Plant Protection Convention. The President, pursuant to Proclamation No. 6780 of March 23, 1995 (60 FR 15845), designated the U.S. Department of Agriculture as the agency responsible for informing the public of SPS standard-setting activities of each international standard-setting organization. The Secretary of Agriculture has delegated to the Office of Food Safety the responsibility to inform the public of the SPS standard-setting activities of Codex. The Office of Food Safety has, in turn, assigned the responsibility for informing the public

of the SPS standard-setting activities of Codex to the U.S. Codex Office.

Codex was created in 1963 by two U.N. organizations, the Food and Agriculture Organization (FAO) and the World Health Organization (WHO). Codex is the principal international organization for establishing standards for food. Through adoption of food standards, codes of practice, and other guidelines developed by its committees and by promoting their adoption and implementation by governments, Codex seeks to protect the health of consumers, ensure fair trade practices in the food trade, and promote coordination of food standards work undertaken by international governmental and non-governmental organizations. In the United States, the United States Department of Agriculture (USDA); the Food and Drug Administration (FDA), Department of Health and Human Services (HHS); the National Oceanic and Atmospheric Association (NOAA), Department of Commerce (DOC); and the Environmental Protection Agency (EPA) manage and carry out U.S. Codex activities.

As the agency responsible for informing the public of the SPS standard-setting activities of Codex, the Office of Food Safety publishes this notice in the **Federal Register** annually. Attachment 1 (Sanitary and Phytosanitary Activities of Codex) sets forth the following information:

1. The SPS standards under consideration or planned for consideration; and

2. *For each SPS standard specified:*

a. A description of the consideration or planned consideration of the standard;

b. Whether the United States is participating or plans to participate in the consideration of the standard;

c. The agenda for United States participation, if any; and

d. The agency responsible for representing the United States with respect to the standard.

To obtain copies of those standards listed in attachment 1, please contact the Codex delegate or the U.S. Codex office:

This notice also solicits public comment on those standards that are currently under consideration or planned for consideration and recommendations for new standards. The delegate, in conjunction with the responsible agency, will take the comments received into account in participating in the consideration of the standards and in proposing matters to be considered by Codex.

The United States delegate will facilitate public participation in the United States Government's activities relating to Codex Alimentarius. The United States delegate will maintain a list of individuals, groups, and organizations that have expressed an interest in the activities of the Codex committees and will disseminate information regarding United States delegation activities to interested parties. This information will include the status of each agenda item; the United States Government's position or preliminary position on the agenda items; and the time and place of planning meetings and debriefing meetings following Codex committee sessions. In addition, the U.S. Codex Office makes much of the same information available through its Web page, *http://www.fsis.usda.gov/Regulations_&_Policies/Codex_Alimentarius/index.asp.* Please visit the Web page or notify the appropriate U.S. delegate or the U.S. Codex Office, Room 4861, South Agriculture Building, 1400 Independence Avenue, SW., Washington, DC 20250–3700 (*uscodex@fsis.usda.gov*), if you would like to access or receive information about specific committees.

The information provided in Attachment 1 describes the status of Codex standard-setting activities by the Codex Committees for the time periods from June 1, 2009, to May 31, 2010, and June 1, 2010, to May 31, 2011. Attachment 2 provides the list of U.S. Codex Officials (including U.S. delegates and alternate delegates). A list of forthcoming Codex sessions may be found at: *http://www.codexalimentarius.net/web/current.jsp?lang=en.*

Additional Public Notification

Public awareness of all segments of rulemaking and policy development is important. Consequently, in an effort to ensure that minorities, women, and persons with disabilities are aware of this notice, FSIS will announce it online through the FSIS Web page located at *http://www.fsis.usda.gov/regulations/2010_Notices_Index/.* FSIS will also make copies of this **Federal Register** publication available through the FSIS Constituent Update, which is used to provide information regarding FSIS policies, procedures, regulations, **Federal Register** notices, FSIS public meetings, and other types of information that could affect or would be of interest to constituents and stakeholders. The Update is communicated via Listserv, a free electronic mail subscription service for industry, trade groups, consumer interest groups, health professionals, and other individuals who have asked to be included.

The Update is also available on the FSIS Web page. Through the Listserv and Web page, FSIS is able to provide information to a much broader and more diverse audience.

Dated: Done at Washington, DC on May 28, 2010.

Karen Stuck,

United States Manager for Codex.

Sanitary and Phytosanitary Activities of Codex Codex Alimentarius Commission and Executive Committee

The Codex Alimentarius Commission will hold its Thirty Third Session July 5–9, 2010, in Geneva, Switzerland. At that time, it will consider standards, codes of practice, and related matters forwarded to the Commission by the general subject committees, commodity committees, and *ad hoc* Task Forces for adoption as Codex standards and guidance. The Commission will also consider the implementation status of the Codex Strategic Plan, the evaluation of the capacity of the Secretariat, the impact of private standards, the management of the Trust Fund for the Participation of Developing Countries and Countries in Transition in the Work of the Codex Alimentarius, as well as financial and budgetary issues. At this Session, the Commission will elect a chairperson and three vice chairpersons.

Prior to the Commission meeting, the Executive Committee will meet at its Sixty-fourth Session on June 29–July 2, 2010. It is composed of the chairperson; vice-chairpersons; seven members elected from the Commission from each of the following geographic regions: Africa, Asia, Europe, Latin America and the Caribbean, Near East, North America, and South-West Pacific; and regional coordinators from the six regional committees. The United States is the elected representative from North America. The Executive Committee will conduct a critical review of the elaboration of Codex standards; review a study on the speed of the Codex standard-setting process, consider the Codex Strategic Plan and the capacity of the Secretariat; consider a business plan for Codex; review matters arising from reports of Codex Committees and proposals for new work, and review the FAO/WHO Trust Fund for Enhanced Participation in Codex.

Responsible Agency: USDA/FSIS.

U.S. Participation: Yes.

Codex Committee on Residues of Veterinary Drugs in Foods

The Codex Committee on Residues of Veterinary Drugs in Foods (CCRVDF)

determines priorities for the consideration of residues of veterinary drugs in foods and recommends Maximum Residue Limits (MRLs) for veterinary drugs. The Committee also develops codes of practice, as may be required, and considers methods of sampling and analysis for the determination of veterinary drug residues in food. A veterinary drug is defined as any substance applied or administered to a food producing animal, such as meat or milk producing animals, poultry, fish or bees, whether used for therapeutic, prophylactic or diagnostic purposes, or for modification of physiological functions or behavior.

A Codex Maximum Limit for Residues of Veterinary Drugs is the maximum concentration of residue resulting from the use of a veterinary drug (expressed in mg/kg or ug/kg on a fresh weight basis) that is recommended by the Codex Alimentarius Commission to be permitted or recognized as acceptable in or on a food. An MRL is based on the type and amount of residue considered to be without any toxicological hazard for human health as expressed by the Acceptable Daily Intake (ADI) or on the basis of a temporary ADI that utilizes an additional safety factor. The MRL also takes into account other relative public health risks as well as food technological aspects.

When establishing an MRL, consideration is also given to residues that occur in food of plant origin or the environment. Furthermore, the MRL may be reduced to be consistent with good practices in the use of veterinary drugs and to the extent that practical analytical methods are available.

An Acceptable Daily Intake (ADI) is an estimate by the Joint FAO/WHO Expert Committee on Food Additives (JECFA) of the amount of a veterinary drug, expressed on a body weight basis, which can be ingested daily over a lifetime without appreciable health risk.

The 18th Session of the Committee met in Natal, Brazil, on May 11–15, 2009. The reference document is ALINORM 9/32/31. The results of the 18th session of the CCRVDF were considered by the Commission at its 32nd Session in July 2009. The reference document is ALINORM 09–32–REP. A meeting of the CCRVDF has not occurred since the last session of the Commission. The following items will be considered at the 33rd session of the Commission in July 2010.

To be considered for final adoption at Step 8:

- Draft MRL for Bovine Somatotropin in cattle.
- Draft MRLs for Ractopamine in pigs and cattle.

At the 18th session of the CCRVDF, the Committee completed a Priority List of Veterinary Drugs Requiring Evaluation or Re-evaluation by JECFA. These drugs are Monepantel (establishment of ADI and recommended MRLs in sheep), Monensin (re-evaluation of MRL in cattle), Derquantel (establishment of ADI and recommended MRLs in sheep), and Ractopamine (review of depletion data in pig tissues). The JECFA is currently evaluating the data for Ractopamine and will report the results of its evaluation to the 33rd session of the Commission.

The Committee will continue work on the following:

- Draft MRLs for Narasin in cattle and pigs.
- Draft MRLs for Tilmicosin in chicken and turkeys.
- A project document on risk management recommendations for veterinary drugs for which no ADI or MRL has been recommended by JECFA. The United States leads an electronic Working Group to define the scope for the work.

Responsible Agencies: HHS/FDA/CVM; USDA/FSIS.

U.S. Participation: Yes.

Codex Committee on Contaminants in Foods

The Codex Committee on Contaminants in Foods (CCCF) establishes or endorses permitted maximum levels, and, where necessary, revises existing guidelines levels for contaminants and naturally occurring toxicants in food and feed; prepares priority lists of contaminants and naturally occurring toxicants for risk assessment by the Joint FAO/WHO Expert Committee on Food Additives; considers and elaborates methods of analysis and sampling for the determination of contaminants and naturally occurring toxicants in food and feed; considers and elaborates standards or codes of practice for related subjects; and considers other matters assigned to it by the Commission in relation to contaminants and naturally occurring toxicants in food and feed.

The Committee held its Fourth Session in Izmir, Turkey, from April 26–30, 2010. The relevant document is ALINORM 10/34/31. The following items are to be considered for adoption at Step 5/8 by the 33rd Session of the Commission in July 2010:

- Proposed draft maximum levels for Melamine in powdered infant formula and in food (other than infant formula) and feed
- Proposed draft maximum levels for total Aflatoxins in shelled, ready-to-eat Brazil nuts and shelled, destined for further processing Brazil nuts (including sampling plan)
- Proposed draft revision of the *Code of Practice for the Prevention and Reduction of Aflatoxin Contamination (Tree Nuts) (appendix on Additional Measures for Brazil Nuts)*

The Committee is continuing to work on:

- Proposed draft *Code of Practice for the Reduction of Ethyl Carbamate in Stone Fruit Distillates,* which was returned to Step 3 for further comments.
- Proposed draft maximum level for Melamine in liquid infant formula at Step 3.
- Discussion paper on *Types of Mycotoxins and Mycotoxin-Producing Fungi found in Sorghum and the Levels of Mycotoxins in Sorghum.*

The Committee agreed to the following new work, pending approval by the Executive Committee:

- Draft maximum levels for Deoxynivalenol (DON) and its acetylated derivatives in cereals and cereal-based products (Canada).
- Draft maximum levels for total Aflatoxins in dried figs (Turkey).

The Committee agreed to establish the following electronic working groups to:

- Develop recommended MLs for substances in natural mineral waters and determine whether safety parameters should be integrated into the General Standard for Contaminants and Toxins in Food and Feed (GSCTFF) or retained in the standard for Natural Mineral Waters (United States and The Netherlands).
- Prepare a discussion paper that would review the current state of knowledge regarding Arsenic and provide a summary of possible risk management options including the feasibility of setting MLs in rice for consideration at the next session (China).
- Prepare a discussion paper concerning risk management options in relation to new risk assessment outcomes (United States).
- Prepare a discussion paper on the occurrence of ochratoxigenic fungi and Ochratoxin A (OTA) in cocoa to assess whether a code of practice should be developed (Ghana and Brazil).
- Prepare a discussion paper to conduct a review of furan exposure, its toxicities, and available technologies to reduce Furan in foods with a view to exploring the possibility of developing a code of practice (United States).
- Prepare a discussion paper to examine the chemistry of pyrrolizidine alkaloids, their toxicity; available methods of analysis for detecting pyrrolizidine alkaloids; occurrence in

plants, food and feed; and the carry-over from feed to food (The Netherlands).

• Proposals on descriptions of the food/feed for which a maximum level applies and to screen the existing MS and provide, where necessary, a clearer description of the food/feed to which the ML applies (European Union).

The Committee decided to suspend work on the proposed draft ML and sampling plans for Fumonisins in Maize and Maize-products until further advice was provided by JECFA.

Responsible Agencies: HHS/FDA; USDA/FSIS.

U.S. Participation: Yes.

Codex Committee on Food Additives

The Codex Committee on Food Additives (CCFA) establishes or endorses acceptable maximum levels for individual food additives; prepares a priority list of food additives for risk assessment by the Joint FAO/WHO Expert Committee on Food Additives (JECFA); assigns functional classes to individual food additives; recommends specifications of identity and purity for food additives for adoption by the Commission; considers methods of analysis for the determination of additives in food; and considers and elaborates standards or codes for related subjects such as the labeling of food additives when sold as such. The 42nd Session of the Committee met in Beijing, China, March 15–19, 2010. The relevant document is ALINORM 10/33/12. Immediately prior to the Plenary session, there was a 1-day physical Working Group on the General Standard for Food Additives (GSFA) chaired by the United States. The following items will be considered by the 33rd Session of the Commission in July 2010.

To be considered for adoption at Steps 8 and 5/8:

• Draft and proposed draft food additive provisions and amendments to the GSFA.

• Proposed draft *Guidelines on Substances Used as Processing Aids (N14–2008).*

• Amendments to the International Numbering System (INS) for Food Additives.

• Specifications for the Identify and Purity of Food Additives arising from the 71st JECFA meeting.

Other matters to be considered for adoption:

• Amendments to revise the name and descriptors of food categories 06.0, 06.2, and 06.2.1 (concerning cereals and flours) of the GSFA.

• Deletion of Note 180 ("Expressed as beta-carotene.") in all adopted and proposed provisions for Carotenoids, and Carotene, beta- (vegetable), beta- (vegetable) of the GSFA.

• Amendment to the provision of Ascorbyl Esters in food category 13.2 (Complementary foods for infants and young children) of the GSFA.

• Amendments associated with Notes 130 and 133 to correct inconsistencies related to the provisions phenolic antioxidants (butylated hydroxyanisole, butylated hydroxytoluene, propyl gallate, and tertiary butylhydroquinone).

• Amendment to the text of Note 136 ("For use in white vegetables only.") associated with certain provisions for Sulfites.

• Amendment to Section 2 "Table of functional classes, definitions and technological purposes" of the INS (CAC/GL 36–1989).

To be considered for revocation:

• Food additive provisions of the GSFA.

• Inventory of Processing Aids (CAC/MISC 3).

To be considered for discontinuation:

• Several draft and proposed draft food additive provisions of the GSFA.

To be considered for approval:

• Project document proposing new work on the revision of the food category system of the GSFA.

• Project document proposing new work on the revision of Standard for Food Grade Salt (CODEX STAN 150–1985).

• Priority list of compounds proposed for evaluation by JECFA.

The Committee established electronic Working Groups (eWGs) to:

• Review Section 4 of the Preamble of the GSFA (Carry-over of Food Additives into Food) with the view to analyze inconsistencies between this Section and the "Carry-over Principle" in Volume 1 of the Codex Alimentarius and to consider the need to revise Section 4 of the Preamble to the GSFA (Brazil).

• Prepare proposed draft provisions for lauric arginate ethyl esters, steviol glycosides, and sulfites. This eWG would also prepare recommendations for all provisions of erythrosine (United States).

• Prepare a discussion paper containing proposals for criteria and conditions on the use of Note 161 ("Subject of national legislation of the importing country aimed, in particular, at consistency with Section 3.2 of the Preamble.") in the GSFA (Netherlands).

• Prepare a discussion paper on the structure and content of a database on information on processing aids and criteria for the data entry and update of the database (New Zealand).

• Consider proposals for changes and additions to the INS list, including the inconsistent use of brackets in the names of substances, whether the substances listed under INS 470(i) should include magnesium salts, whether technological purposes should be listed for so-called "parent food additives," and the use of the term "caustic" for INS 150a and 150b (Finland).

• Review all comments and information submitted and revise the maximum use levels for aluminum-containing food additives in the GSFA to ensure that the maximum use levels are numeric and expressed on an "as aluminum" basis (Brazil).

• Prepare a proposal for the revision of food categories 05.1 (Cocoa products and chocolate products including imitation and chocolate substitutes), 05.2 (Confectionery, including hard and soft candy, nougats, etc., other than food categories 05.1, 05.3, and 05.4), and 05.4 (Decorations (*e.g.,* for fine bakery wares), toppings (non-fruit), and sweet sauces) (United States).

• Prepare a discussion paper with a proposal for the alignment of the food additive provision in the five Codex standards for meat products with the provisions in the GSFA and an analysis of the problems and solutions identified in carrying out this work (Australia).

The Committee also agreed to prepare a discussion paper on the development of a proposal for a re-evaluation process of substances in light of new data and new scientific developments in risk assessment (JECFA Secretariat).

Responsible Agency: HHS/FDA.

U.S. Participation: Yes.

Codex Committee on Pesticide Residues

The Codex Committee on Pesticide Residues recommends to the Codex Alimentarius Commission establishment of maximum limits for pesticide residues for specific food items or in groups of food. A Codex Maximum Residue Limit for Pesticide (MRLP) is the maximum concentration of a pesticide residue (expressed as mg/kg) recommended by the Codex Alimentarius Commission to be legally permitted in or on food commodities and animal feeds. Foods derived from commodities that comply with the respective MRLPs are intended to be toxicologically acceptable. That is, consideration of the various dietary residue intake estimates and determinations, both at the national and international level, in comparison with the Acceptable Daily Intake (ADI), should indicate that foods complying with Codex MRLPs are safe for human consumption. Codex MRLPs are primarily intended to apply in international trade and are derived from

reviews conducted by the Joint Meeting on Pesticide Residues (JMPR).

The 41st Session of the Committee met in Beijing, China, on April 19–24, 2010. The relevant document is ALINORM 10/33/24. The following items will be considered by the Commission at its 33nd Session in July 2010.

To be considered for adoption at Step 8:

• Draft and revised draft Maximum Residue Limits for pesticide/commodity combinations: Boscalid (1 commodity), Carbofuran (4), Carbosulfan (4), and Methomyl (1)

To be considered at Step 5/8:

• Proposed draft and revised draft Maximum Residue Limits for pesticide/commodity combinations: Benalaxyl (7 commodities), Boscalid (35), Buprofezin (18), Chlorpyrifos-Methyl (10), Cypermethrin (including alpha- and zeta-cypermethrin) (8), Febuconazole (5), Fluopicolide (17), Haloxyfop (4), Hexythiazox (20), Indoxacarb (13), Metaflumizone (12), Methoxyfenozide (23), Paraquat (2), Prochloraz (1), Prothioconazole (10), Spirodiclofen (20), and zoxamide (14) (see ALINORM 10/33/24, appendices II & III for lists of the commodities).

Responsible Agencies: EPA; USDA/AMS.

U.S. Participation: Yes.

Codex Committee on Methods of Analysis and Sampling

The Codex Committee on Methods of Analysis and Sampling defines the criteria appropriate to Codex methods of analysis and sampling; serves as a coordinating body for Codex with other international groups working on methods of analysis and sampling and quality assurance systems for laboratories; specifies, on the basis of final recommendations submitted to it by the bodies referred to above, reference methods of analysis and sampling appropriate to Codex standards which are generally applicable to a number of foods; considers, amends if necessary, and endorses as appropriate methods of analysis and sampling proposed by Codex commodity committees, except for methods of analysis and sampling for residues of pesticides or veterinary drugs in food, the assessment of microbiological quality and safety in food, and the assessment of specifications for food additives; elaborates sampling plans and procedures, as may be required; considers specific sampling and analysis problems submitted to it by the Commission or any of its Committees; and defines procedures, protocols, guidelines or related texts for the assessment of food laboratory proficiency, as well as quality assurance systems for laboratories.

The 31st Session of the Committee met in Budapest, Hungary, March 8–12, 2010. The relevant document is ALINORM 10/33/23. The following items will be considered for adoption by the 32nd Session of the Commission in July 2010.

To be considered for final adoption at step 5/8:

• Proposed draft *Guidelines on Performance Criteria and Validation of Methods for Detection, Identification, and Quantification of Specific DNA Sequences and Specific Proteins in Foods.*

• Methods of Analysis in Codex Standards at Different Steps, including Methods of Analysis for Natural Mineral Waters.

To be considered for final adoption at step 5:

• Proposed draft *Revised Guidelines for Measurement Uncertainty.*

The Committee agreed to establish an electronic working group to develop a discussion paper on *Procedures for Conformity Assessment and Resolution of Disputes, Taking into Account Measurement Uncertainty, Sampling Uncertainty and Other Relevant Issues.*

Responsible Agencies: HHS/FDA; USDA/GIPSA.

U.S. Participation: Yes.

Codex Committee on Food Import and Export Inspection and Certification Systems

The Codex Committee on Food Import and Export Inspection and Certification Systems is charged with developing principles and guidelines for food import and export inspection and certification systems, with a view to harmonizing methods and procedures that protect the health of consumers, ensure fair trading practices, and facilitate international trade in foodstuffs. Additionally, the Committee develops principles and guidelines for the application of measures by the competent authorities of exporting and importing countries to provide assurances, where necessary, that foodstuffs comply with requirements, especially statutory health requirements; develops guidelines for the utilization, as and when appropriate, of quality assurance systems to ensure that foodstuffs conform with requirements and promotes the recognition of these systems in facilitating trade in food products under bilateral/multilateral arrangements by countries; develops guidelines and criteria with respect to format, declarations, and language of such official certificates as countries may require with a view towards international harmonization; makes recommendations for information exchange in relation to food import/export control; consults as necessary with other international groups working on matters related to food inspection and certification systems; and considers other matters assigned to it by the Commission in relation to food inspection and certification systems.

The 18th Session of the Committee met in Surfers Paradise, Australia, on March 1–5, 2010. The reference document is ALINORM 10/33/30. The following will be considered by the Commission at its 33rd Session in July 2010.

To be considered for final adoption at step 5/8:

• Proposed draft *Principles and Guidelines for the Conduct of Foreign On-site Audits and Inspections.*

The Committee will continue working on:

• Proposed draft *Principles and Guidelines for the Conduct of Assessments of Foreign Official Inspection and Certification Systems.*

Responsible Agencies: HHS/FDA; USDA/FSIS.

U.S. Participation: Yes.

Codex Committee on General Principles

The Codex Committee on General Principles deals with procedures and general matters as are referred to it by the Codex Alimentarius Commission. Such matters have included the review and endorsement of procedural revisions to the Codex Procedural Manual; the development of a mechanism for examining any economic impact statements submitted by governments concerning possible implications for their economies of some of the individual standards or some of the provisions thereof; and the establishment of a Code of Ethics for International Trade in Food.

The Committee held its 26th Session in Paris, France, on April 12–16, 2010. The reference document is ALINORM 10/33/33. The following will be considered by the Commission at its 33rd Session in July 2010:

To be considered for final adoption at Step 8:

• Draft revised *Code of Ethics for International Trade in Food including Concessional and Food Aid Transactions* Amendments to the Codex Procedural Manual.

• Proposed amendment to the *Guidelines to Chairpersons of Codex Committees and Ad Hoc Intergovernmental Task Forces.*

• Proposed amendment to the *Guidelines to Host Governments of Codex Committees and Ad Hoc Intergovernmental Task Forces.*

Responsible Agencies: USDA/FSIS; HHS/FDA.

U.S. Participation: Yes.

Codex Committee on Food Labeling

The Codex Committee on Food Labeling drafts provisions on labeling applicable to all foods; considers, amends, and endorses draft specific provisions on labeling prepared by the Codex Committees drafting standards, codes of practice, and guidelines; and studies specific labeling problems assigned by the Codex Alimentarius Commission. The Committee also studies problems associated with the advertisement of food with particular reference to claims and misleading descriptions.

The Committee held its 38th Session in Quebec City, Canada, on May 3–7, 2010. The reference document is ALINORM 10/33/22. The following items are to be considered by the 32nd Session of the Commission in July 2010.

To be considered at Step 5/8:

• Proposed draft Criteria/Principles for Legibility of Nutrition Labels.

• Editorial amendments to several standards, specifically:

• Section 4.2.3.3 of the General Standard for the Labeling of and Claims for Prepackaged Foods (Codex Standard 1–1985) with the Codex International Numbering System in CAC/GL 36–1989.

• Editorial amendments to the Guidelines on Nutrition and Health Claims (CAC/GL23–1997).

• Editorial amendments to guidelines for the production, processing, labeling and marketing of organically produced foods (CAC/GL 32–1999 (-(other uses of ethylene).

The Committee will continue to work on:

• Proposed draft revision of the *Guidelines on Nutrition Labeling (CAC/GL 2–1985)* concerning the list of nutrients that are Always Declared on a Voluntary or Mandatory Basis (at Step 5 of the procedure).

• Proposed draft recommendations for the labeling of foods obtained through certain techniques of genetic modification/genetic engineering (at Step 3 of the procedure).

• Draft amendment to the General Standard for the Labeling of Prepackaged Foods (at Step 6).

• Codex Standard (1–1985): Definitions for "food and food ingredients obtained through certain techniques of genetic modification/genetic engineering," "Organism," "Genetically modified/engineered organism," and "Modern biotechnology" (at Step 6).

• Draft amendment to the *Guidelines for the Production, Processing, Labeling and Marketing of Organically Produced Food (CAC/GL 32–1999),* Section 5.1 relating to other uses of ethylene (at Step 7).

Responsible Agencies: HHS/FDA; USDA/FSIS.

U.S. Participation: Yes.

Codex Committee on Food Hygiene

The Codex Committee on Food Hygiene (CCFH) develops basic provisions on food hygiene applicable to all food; considers, amends if necessary, and endorses provisions on food hygiene prepared by Codex commodity committees and contained in Codex commodity standards; considers, amends if necessary, and endorses (unless otherwise directed by the Codex Alimentarius Commission) provisions on food hygiene prepared by Codex commodity committees and contained in Codex codes of practice; develops provisions on food hygiene applicable to specific food items or food groups, whether coming within the terms of reference of a Codex commodity committee or not; considers specific food hygiene problems assigned to it by the Commission; suggests and prioritizes areas where there is a need for microbiological risk assessment at the international level and develops questions to be addressed by the risk assessors; and considers microbiological risk management matters in relation to food hygiene and in relation to FAO/WHO risk assessments.

The 41st Session of the CCFH met in San Diego, California, on November 16–20, 2009, and is summarized in the report number ALNORM 10/33/13. The following items related to the activities of the CCFH will be considered by the Commission at its 33rd Session in July 2010.

The following documents will be considered for final adoption at Step 5/8:

• Proposed draft *Annex on Leafy Green Vegetables Including Leafy Herbs to the Code of Hygienic Practice for Fresh Fruits and Vegetables.*

• Proposed draft *Code of Hygienic Practice for Pathogenic Vibrio spp. in Seafood.*

• Proposed draft *Annex on Control Measures for Vibrio parahaemolyticus and Vibrio vulnificus in Molluscan Shellfish.*

The following document will be considered for adoption and inclusion in the Codex Alimentarius Procedural Manual:

• Proposed draft *Risk Analysis Principles and Procedures Applied by the Codex Committee on Food Hygiene.*

CCFH continues to work on the following documents:

• Proposed draft *Guidelines for the Control of Campylobacter and Salmonella spp. in Chicken Meat.*

• Proposed draft *Code of Hygienic Practice for Control of Viruses in Food.*

New work agreed to at the 41st session of CCFH includes the following:

• Proposed revision of the *Recommended International Code of Hygienic Practice for Collecting, Processing and Marketing of Natural Mineral Waters.*

• Proposed revision of *Principles for the Establishment and Application of Microbiological Criteria for Foods.*

Responsible Agencies: HHS/FDA; USDA/FSIS.

U.S. Participation: Yes.

Codex Committee on Fresh Fruits and Vegetables

The Codex Committee on Fresh Fruits and Vegetables is responsible for elaborating worldwide standards and codes of practice for fresh fruits and vegetables; and for consulting with the UNECE Working Party on Agricultural Quality Standards to elaborate worldwide standards and codes of practice with particular regard to ensuring that there is no duplication of standards or codes of practice and that they follow the same broad format.

The Committee held its 15th Session in Mexico City, Mexico, on October 19–23, 2009. The reference document is ALINORM 10/33/35. The following will be considered by the Commission at its 33rd Session in July 2010.

To be considered at step 8:

• Draft Section 6 "*Marking or Labeling*" (Draft Standard for Bitter Cassava).

• Draft Standard for Apples.

To be considered at step 5:

• Proposed draft revision of the Standard for Avocados.

• Proposed draft Standard for Tree Tomatoes.

The Committee will continue working on:

• Proposed draft Standard for Chili Peppers.

• Proposed draft Standard for Pomegranate.

• Proposed *Layout for Codex Standards for Fresh Fruits and Vegetables.*

• Glossary of Terms used in the Proposed *Layout for Codex Standards for Fresh Fruits and Vegetables.*

• Proposals for new work on fresh fruits and vegetables.

Responsible Agencies: USDA/AMS; HHS/FDA.

U.S. Participation: Yes.

Codex Committee on Nutrition and Foods for Special Dietary Uses

The Codex Committee on Nutrition and Foods for Special Dietary Uses (CCNFSDU) is responsible for studying nutrition issues referred to it by the Codex Alimentarius Commission. The Committee also drafts general provisions, as appropriate, on nutritional aspects of all foods and develops standards, guidelines or related texts for foods for special dietary uses, in cooperation with other committees where necessary; considers, amends if necessary, and endorses provisions on nutritional aspects proposed for inclusion in Codex standards, guidelines and related texts.

The Committee held its 31st Session in Düsseldorf, Germany, on November 2–6, 2009. The reference document is ALINORM 10/33/26. An additional reference for dietary fibre methods of analysis is the report of the 31st Session of the Codex Committee on Methods of Analysis and Sampling (ALINORM 10/33/23). The following items will be considered by the Commission at its 33rd Session in July 2010.

To be considered for final adoption at Step 8:

- *List of Methods for Dietary Fibre.*

To be reviewed at Step 5:

- *The General Principles for Establishing Nutrient Reference Values of Vitamins and Minerals for the General Population.*

The Committee will continue work on:

- Proposed draft *Additional or Revised Nutrient Reference Values for Labeling Purposes in the Codex Guidelines on Nutrition Labeling.*
- A revised document on *General Principles and Criteria for the Development of Nutrient Reference Values for Nutrients Associated with Risk of Diet-Related Non-communicable Diseases.*
- A revised document to amend the *Codex General Principles for the Addition of Essential Nutrients to Foods.*
- A revised document to revise the *Codex Guidelines on Formulated Supplementary Foods for Older Infants and Young Children.*
- A revised discussion paper on the Proposal for New Work to Establish a Standard for Processed Cereal-Based Foods for Underweight Infant and Young Children.

Responsible Agencies: HHS/FDA; USDA/ARS.

U.S. Participation: Yes.

Codex Committee on Fish and Fishery Products

The Fish and Fishery Products Committee is responsible for elaborating standards for fresh, frozen and otherwise processed fish, crustaceans, and mollusks. The 33rd Session of the Committee met in Agadir, Morocco, September 28–October 2, 2009. The relevant document is ALINORM 10/33/18. The following items will be considered by the Commission at its 33rd Session in July 2010.

To be considered for final adoption at Step 8:

- Draft *Code of Practice for Fish and Fishery Products (Lobsters and Crabs and relevant Definitions).*
- Draft Standard Sturgeon Caviar.
- Amendment of *Section 2.1 General Definitions in the Code of Practice for Fish and Fishery Products.*

To be reviewed at Step 5:

- Proposed draft Standard for Smoked Fish, Smoke-Flavoured Fish and Smoke-Dried Fish.
- Proposed draft Standard for Fish Sauce.

The Committee will continue working on:

- Proposed draft *Code of Practice for the Processing of Scallop Meat.*
- Proposed draft amendment to Section 3.4.5.1 (Water) of the *Code of Practice for Fish and Fishery Products.*
- Proposed draft Standard for Quick Frozen Scallop Adductor Muscle Meat.
- Proposed draft revision of the *Procedure for the Inclusion of Additional Species in Standards for Fish and Fishery Products.*
- Draft *List of Methods for the Determination of Biotoxins in the Standard for Raw and Live Bivalve Molluscs.*
- Proposed draft *Code of Practice for Fish and Fishery Products (Other sections including smoked fish).*
- Proposed draft Standard for Fresh/Live and Frozen Abalone (*Haliotis* spp.)
- Amendment to the Standard for Quick Frozen Fish Sticks (Nitrogen Factors).
- Food Additive Provisions in Standards for Fish and Fishery Products.

Responsible Agencies: HHS/FDA; USDC/NOAA/NMFS.

U.S. Participation: Yes.

Codex Committee on Milk and Milk Products

The Codex Committee on Milk and Milk Products is responsible for establishing international codes and standards for milk and milk products.

The 9th Session of the CCMMP met in Auckland, New Zealand, on February 1–5, 2010. The reference document is ALINORM 10/33/11. The following items related to the activities of the CCMMP will be considered for adoption by the Commission at its 33rd Session in July 2010.

- Methods of Analysis and Sampling for Milk and Milk Products Standards, including AOAC standards.
- Revised Food Additive Listings of Standards for Milk and Milk Products.
- Revised Model Export Model Certificate for Milk and Milk Product.
- Proposed draft amendment to the Codex Standard for Fermented Milks pertaining to Drinks based on Fermented Milk (CODEX STAN 243–2003).

The Committee completed the work assigned to it by the Commission and is proposing to the Commission to adjourn *sine die* until such time as the Commission would require it to take new work.

Responsible Agencies: USDA/AMS; HHS/FDA.

U.S. Participation: Yes.

Codex Committee on Fats and Oils

The Codex Committee on Fats and Oils is responsible for elaborating standards for fats and oils of animal, vegetable, and marine origin. The Committee held its 21st Session in Kota Kinabalu, Malaysia, on February 16–20, 2009. The Committee has not met since the 2009 meeting of the Codex Commission. The Committee is working on:

- Proposed draft *List of Acceptable Previous Cargoes.*
- Proposed draft Criteria *(Code of Practice for the Storage and Transport of Fats and Oils in Bulk).*
- Proposed draft amendment to the Standard for Olive Oils and Olive Pomace Oils: Linolenic acid.
- Proposed draft amendments to the Standard for Named Vegetable Oils: Inclusion of palm kernel olein and palm kernel stearin.

Responsible Agencies: HHS/FDA; USDA/ARS.

U.S. Participation: Yes.

Codex Committee on Processed Fruits and Vegetables

The Codex Committee on Processed Fruits and Vegetables is responsible for elaborating worldwide standards for all types of processed fruits and vegetables including dried products, canned dried peas and beans, and jams and jellies (but not dried prunes or fruit and vegetable juices), as well as revision of standards for quick frozen fruits and vegetables.

The Committee held its 24th Session in Washington, DC, on September 15–

20, 2008. The reference document is ALINORM 09/32/27. The Committee has not met since the 32nd Session of the Commission in 2009. The Committee will next meet October 25–29, 2010, in Depasar, Indonesia.

The Committee is continuing work on:

• Proposed Draft Annexes specific to Certain Canned Vegetables (Draft Codex Standard for Certain Canned Vegetables).

• Proposed Draft Sampling Plans including *Metrological Provisions for Controlling Minimum Drained Weight of Canned Fruits and Vegetables in Packing Media.*

• Methods of Analysis for Processed Fruits and Vegetables—Aqueous Coconut Products: Coconut Cream and Coconut Milk.

• Food Additive Provisions for Processed Fruits and Vegetables.

• Proposals for Amendments to the Priority List for Standardization of Processed Fruits and Vegetables.

• Revision of the Standard for Table Olives.

• Revision of the Standard for Grated Desiccated Coconut.

• Revision of the Standards for Canned Bamboo Shoots and Canned Mushrooms for inclusion as annexes to the Draft Standard for Certain Canned Vegetables.

Responsible Agencies: USDA/AMS; HHS/FDA.

U.S. Participation: Yes.

Certain Codex Commodity Committees

Several Codex Alimentarius Commodity Committees have adjourned *sine die.* The following Committees fall into this category:

• Natural Mineral Waters.

Responsible Agency: HHS/FDA.

U.S. Participation: Yes.

• Milk and Milk Products.

Responsible Agencies: USDA/AMS; HHS/FDA.

U.S. Participation: Yes.

• Cocoa Products and Chocolate.

Responsible Agency: HHS/FDA.

U.S. Participation: Yes.

• Meat Hygiene.

Responsible Agency: USDA/FSIS.

U.S. Participation: Yes.

• Sugars.

Responsible Agencies: USDA/ARS; HHS/FDA.

U.S. Participation: Yes.

• Vegetable Proteins.

Responsible Agencies: USDA/ARS; HHS/FDA.

U.S. Participation: Yes.

• Cereals, Pulses and Legumes.

Responsible Agencies: HHS/FDA; USDA/GIPSA.

U.S. Participation: Yes.

Ad Hoc Intergovernmental Task Force on Antimicrobial Resistance

The ad hoc Intergovernmental Task Force on Antimicrobial Resistance was created by the 29th Session of the Commission.

The Task Force, hosted by the Republic of Korea, has a time frame of four sessions, which started with its first meeting in October 2007. Its objective is to develop science-based guidance to be used to assess the risks to human health associated with the presence in food and feed, including aquaculture, and the transmission through food and feed of antimicrobial resistant microorganisms and antimicrobial resistance genes and to develop appropriate risk management advice based on that assessment to reduce such risk. In this process, work undertaken in this field at national, regional, and international levels should be taken into account.

The 3rd Session of the Task Force met in Jeju, Republic of Korea, on October 12–16, 2009. The relevant document is Alinorm 10/33/42.

The Task Force is continuing work on:

• Proposed draft *Guidelines for Risk Analysis of Foodborne Antimicrobial Resistance*.

Responsible Agencies: HHS/FDA; USDA/FSIS.

U.S. Participation: Yes.

FAO/WHO Regional Coordinating Committees

The FAO/WHO Regional Coordinating Committees define the problems and needs of each of the regions concerning food standards and food control; promote exchange of information on proposed regulatory initiatives and problems arising from food control and stimulate the strengthening of food control infrastructures; recommend to the Commission the development of worldwide standards for products of interest to the region, including products considered by the Committees to have an international market potential in the future; develop regional standards for food products moving exclusively or almost exclusively in intra-regional trade; promote coordination of all regional food standards work undertaken by international governmental and non-governmental organizations within each region; exercise a general coordinating role for each of the regions; and promote the use of Codex standards and related texts by members.

Coordinating Committee for Africa

The Committee (CCAfrica) held its 18th session in Accra, Ghana, from February 24–27, 2009. The relevant document is ALINORM 09/32/18. The Committee has not met since the 32nd Session of the Codex Alimentarius Commission in 2009.

Responsible Agency: USDA/FSIS.

U.S. Participation: Yes (as observer).

Coordinating Committee for Asia

The Committee (CCAsia) held its 16th session in Denpasar, Indonesia, from November 17–21, 2008. The relevant document is ALINORM 09/32/15. The Committee has not met since the 32nd Session of the Codex Alimentarius Commission in 2009. The Committee is continuing to work on:

• Proposed Draft Standard for Non-fermented Soybean Products.

• Proposed Draft Regional Standard for Chili Sauce.

• Discussion Paper on tempe and tempe products.

Responsible Agency: USDA/FSIS.

U.S. Participation: Yes (as observer).

Coordinating Committee for Europe

The Committee (CCEurope) held its 26th session in Warsaw, Poland, from October 7–10, 2008. The relevant document is ALINORM 09/32/19. The Committee has not met since the 32nd Session of the Codex Alimentarius Commission in 2009.

Responsible Agency: USDA/FSIS.

U.S. Participation: No.

Coordinating Committee for Latin America and the Caribbean

The Committee (CCLAC) held its 16th session in Acapulco, Mexico, from November 10–14, 2008. The relevant document is ALINORM 09/32/36. The Committee has not met since the 32nd Session of the Codex Alimentarius Commission in 2009. The Committee is continuing to work on:

• Regional Standards for Culantro and Lucuma.

• Regional Standard for Culantro Coyote.

Responsible Agency: USDA/FSIS.

U.S. Participation: Yes (as observer).

Coordinating Committee for the Near East

The Committee (CCNEA) held its 5th session in Tunis, Tunisia, from January 26–29, 2009. The relevant document is ALINORM 09/32/40. The Committee has not met since the 32nd Session of the Codex Alimentarius Commission in 2009. The Committee is continuing to work on:

• Proposed Draft *Regional Code of Practice for Street-Vended Foods.*

• Proposed Regional Standard for Harissa (hot pepper paste).

• Proposed Regional Standard for Halwa Tehenia (halwa shamia).

• Project Document for a Regional Standard for Camel Milk.

• Project Documents for Regional Standards for Date Paste and Date Molasses.

Responsible Agency: USDA/FSIS.

U.S. Participation: Yes (as observer).

Coordinating Committee for North America and the Southwest Pacific

The Committee (CCNASWP) held its 10th session in Nuku'alofa, Tonga, from October 28–31, 2008. The relevant document is ALINORM 09/32/32. The Committee has not met since the 32nd Session of the Codex Alimentarius Commission in 2009. The Committee continues to work on:

• Implementation of the Codex Strategic Plan and Adoption of the Regional Strategic Plan.

• Discussion Paper on Kava.

Responsible Agencies: HHS/FDA; USDA/FSIS.

U.S. Participation: Yes.

U.S. Codex Alimentarius Officials Codex Chairpersons From the United States Codex Committee on Food Hygiene

Emilio Esteban, DVM, MBA, MPVM, Ph.D., Scientific Advisor for Laboratory Services and Research, Office of Public Health Science, Food Safety and Inspection Service, U.S. Department of Agriculture, 950 College Station Road, Athens, GA 30605, *Phone:* (706) 546–3429, *Fax:* (706) 546–3428, *E-mail: emilio.esteban@fsis.usda.gov.*

Codex Committee on Processed Fruits and Vegetables

Richard Boyd, Head, Defense Contract Inspection Section, Processed Products Branch, Fruit and Vegetable Programs, Agricultural Marketing Service, U.S. Department of Agriculture, 1400 Independence Avenue, SW., Mail Stop 0247, Room 0726-South Building, Washington, DC 20250, *Phone:* (202) 720–5021, *Fax:* (202) 690–1527, *E-mail: richard.boyd@usda.gov.*

Codex Committee on Residues of Veterinary Drugs in Foods

Dr. Steven D. Vaughn, Director, Office of New Animal Drug Evaluation, Center for Veterinary Medicine, FDA, 7520 Standish Place, Rockville, MD 20855, *Phone:* (240) 276–8300, *Fax:* (240) 276–9538, *E-mail: Steven.Vaughn@fda.hhs.gov.*

Codex Committee on Cereals, Pulses and Legumes (adjourned sine die)

VACANT.

Listing of U.S. Delegates and Alternates Worldwide General Subject Codex Committees Codex Committee on Residues of Veterinary Drugs in Foods

(Host Government—United States)

U.S. Delegate

Dr. Kevin Greenlees, Senior Advisor for Science & Policy, Office of New Animal Drug Evaluation, HFV–100, USFDA Center for Veterinary Medicine, 7520 Standish Place, Rockville, MD 20855, *Phone:* (240) 276–8214, *Fax:* (240) 276–9538, *E-mail: Kevin.Greenlees@fda.hhs.gov.*

Alternate Delegate

Dr. Charles Pixley, Director, Laboratory Quality Assurance Division, Office of Public Health Science, Food Safety and Inspection Service, 950 College Station Road, Athens, GA 30605, *Phone:* (706) 546–3559, *Fax:* (706) 546–3452, *E-mail: charles.pixley@fsis.usda.gov.*

Codex Committee on Food Additives

(Host Government—China)

U.S. Delegate

Dennis M. Keefe, Ph.D., Office of Premarket Approval, Center for Food Safety and Applied Nutrition, Food and Drug Administration (HFS–200), Harvey W. Wiley Federal Building, 5100 Paint Branch Parkway, College Park, MD 20740–3835, *Phone:* (202) 418–3113, *Fax:* (202) 418–3131, *E-mail: dennis.keefe@fda.hhs.gov.*

Alternate Delegate

Susan E. Carberry, Ph.D., Supervisory Chemist, Division of Petition Review, Office of Food Additive Safety (HFS–265), Center for Food Safety and Applied Nutrition, Food and Drug Administration, 5100 Paint Branch Parkway, College Park, MD 20740, *Phone:* (301) 436–1269, *Fax:* (301) 436–2972, *E-mail: Susan.Carberry@fda.hhs.gov.*

Codex Committee on Contaminants in Foods

(Host Government—the Netherlands).

U.S. Delegate

Nega Beru, Ph.D., Director, Office of Plant and Dairy Foods (HFS–300), Center for Food Safety and Applied Nutrition, Food and Drug Administration, 5100 Paint Branch Parkway, College Park, MD 20740, *Phone:* (301) 436–1700, *Fax:* (301) 436–2651, *E-mail: Nega.Beru@fda.hhs.gov.*

Alternate Delegate

Kerry Dearfield, Ph.D., Scientific Advisor for Risk Assessment, Office of Public Health Science, Food Safety and Inspection Service, U.S. Department of Agriculture, 1400 Independence Avenue, SW., Room 380, Aerospace Center, Washington, DC 20250, *Phone:* (202) 690–6451, *Fax:* (202) 690–6337, *E-mail: Kerry.Dearfield@fsis.usda.gov.*

Codex Committee on Pesticide Residues

(Host Government—China).

U.S. Delegate

Lois Rossi, Director of Registration Division, Office of Pesticide Programs, U.S. Environmental Protection Agency, Ariel Rios Building, 1200 Pennsylvania Avenue, NW., Washington, DC 20460, *Phone:* (703) 305–5447, *Fax:* (703) 305–6920, *E-mail: rossi.lois@epa.gov.*

Alternate Delegate

Robert Epstein, Ph.D., Associate Deputy Administrator, Science and Technology, Agricultural Marketing Service, U.S. Department of Agriculture, P.O. Box 96456, Room 3522S, Mail Stop 0222, 1400 Independence Avenue, SW., Washington, DC 20090, *Phone:* (202) 720–5231, *Fax:* (202) 720–6496, *E-mail: robert.epstein@usda.gov.*

Codex Committee on Methods of Analysis and Sampling

(Host Government—Hungary).

U.S. Delegate

Gregory Diachenko, Ph.D., Director, Division of Product Manufacture and Use, Office of Premarket Approval, Center for Food Safety and Applied Nutrition (CFSAN), Food and Drug Administration (HFS–300), Harvey W. Wiley Federal Building, 5100 Paint Branch Parkway, College Park, MD 20740–3835, *Phone:* (301) 436–2387, *Fax:* (301) 436–2364, *E-mail: gregory.diachenko@fda.hhs.gov.*

Alternate Delegate

David B. Funk, Associate Director for Methods Development, USDA–GIPSA–Technical Services Division, 10383 N. Ambassador Dr., Kansas City, MO 64153, *Phone:* (816) 891–0473, *Fax:* (816) 891–0478, *E-mail: David.b.funk@usda.gov.*

Codex Committee on Food Import and Export Inspection and Certification Systems

(Host Government—Australia).

U.S. Delegate

Mary Stanley, Director, International Policy Division, Office of Policy and Program Development, Food Safety and Inspection Service, U.S. Department of Agriculture, Room 2925, South Agriculture Building, 1400

Independence Avenue, SW., Washington, DC 20250, *Phone:* (202) 720–0287, *Fax:* (202) 720–4929, *E-mail: Mary.Stanley@fsis.usda.gov.*

Alternate Delegate

H. Michael Wehr, Senior Advisor and Codex Program Coordinator, International Affairs Staff, Center for Food Safety and Applied Nutrition, 5100 Paint Branch Parkway (HFF–550), College Park, MD 20740, *Phone:* (301) 436–1724, *Fax:* (301) 436–2618, *E-mail: Michael.wehr@fda.hhs.gov.*

Codex Committee on General Principles

(Host Government—France).

U.S. Delegate

Note: A member of the Steering Committee heads the delegation to meetings of the General Principles Committee.

Codex Committee on Food Labeling

(Host Government—Canada).

U.S. Delegate

Barbara O. Schneeman, Ph.D., Director, Office of Nutritional Products, Labeling and Dietary Supplements, Center for Food Safety and Applied Nutrition, Food and Drug Administration, 5100 Paint Branch Parkway (HFS–800), College Park, MD 20740, *Phone:* (301) 436–2373, *Fax:* (301) 436–2636, *E-mail: barbara.schneeman@fda.hhs.gov.*

Alternate Delegate

Jeffrey Canavan, Deputy Director, Labeling and Program Delivery Division, Food Safety and Inspection Service, USDA, 5601 Sunnyside Ave., Stop 5273, Beltsville, MD 20705–5273, *Phone:* (301) 504–0860, *Fax:* (301) 504–0872, *E-mail: Jeff.canavan@fsis.usda.gov.*

Codex Committee on Food Hygiene

(Host Government—United States).

U.S. Delegate

Jenny Scott, Senior Advisor, Office of Food Safety, Food and Drug Administration, Center for Food Safety and Applied Nutrition, 5100 Paint Branch Parkway, HFS–300, Room 3B–014, College Park, MD 20740–3835, *Phone:* (301) 436–2166, *Fax:* (202) 436–2632, *E-mail: Jenny.Scott@fda.hhs.gov.*

Alternate Delegates

Kerry Dearfield, Ph.D., Scientific Advisor for Risk Assessment, Office of Public Health Science, Food Safety and Inspection Service, U.S. Department of Agriculture, 1400 Independence Avenue, SW., Room 380, Aerospace Center, Washington, DC 20250, *Phone:* (202) 690–6451, *Fax:* (202) 690–6337, *E-mail: Kerry.Dearfield@fsis.usda.gov.*

Dr. Joyce Saltsman, Interdisciplinary Scientist, Office of Food Safety (HFS–317), Center for Food Safety and Applied Nutrition, Food and Drug Administration, 5100 Paint Branch Parkway, College Park, MD 20740, *Phone:* (301) 436–1641, *Fax:* (301) 436–2651, *E-mail: Joyce.Saltsman@fda.hhs.gov.*

Codex Committee on Nutrition and Food for Special Dietary Uses

(Host Government—Germany).

U.S. Delegate

Barbara O. Schneeman, Ph.D., Director, Office of Nutritional Products, Labeling and Dietary Supplements, Center for Food Safety and Applied Nutrition, Food and Drug Administration, 5100 Paint Branch Highway (HFS–800), College Park, MD 20740, *Phone:* (301) 436–2373, *Fax:* (301) 436–2636, *E-mail: barbara.schneeman@fda.hhs.gov.*

Alternate Delegate

Allison Yates, Ph.D., Director, Beltsville Human Nutrition Research Center, Agricultural Research Service, U.S. Department of Agriculture, 10300 Baltimore Avenue, Bldg 307C, Room 117, Beltsville, MD 20705, *Phone:* (301) 504–8157, *Fax:* (301) 504–9381, *E-mail: Allison.Yates@ars.usda.gov.*

Worldwide Commodity Codex Committees

Codex Committee on Fresh Fruits and Vegetables:

(Host Government—Mexico).

U.S. Delegate

Dorian LaFond, International Standards Coordinator, Fruit and Vegetables Program, Agricultural Marketing Service, USDA, Room 2086, South Building, 1400 Independence Avenue, SW., Washington, DC 20250, *Phone:* (202) 690–4944, *Fax:* (202) 720–4722, *E-mail: dorian.lafond@usda.gov.*

Alternate Delegate

Dongmin Mu, Product Evaluation and Labeling Team, Food Labeling and Standards Staff, Office of Nutrition, Labeling and Dietary Supplements, Food and Drug Administration, 5100 Paint Branch Parkway, College Park, MD 20740, *Tel:* 301–436–1775, *Fax:* 301–436–2636, *E-mail: dongmin.mu@fda.hhs.gov.*

Codex Committee on Fish and Fishery Products:

(Host Government—Norway).

U.S. Delegate

Donald Kraemer, Acting Director, Office of Seafood, Center for Food Safety and Applied Nutrition, Food and Drug Administration, Harvey W. Wiley Federal Building, 5100 Paint Branch Parkway, College Park, MD 20740–3835, *Phone:* (301) 436–2300, *Fax:* (301) 436–2599, *E-mail: donald.kraemer@fda.hhs.gov.*

Alternate Delegate

Timothy Hansen, Director, Seafood Inspection Program, National Oceanic and Atmospheric Administration, Department of Commerce, Room 10837, 1315 East West Highway, Silver Spring, MD 20910, *Phone:* (301) 713–2355, *Fax:* (301) 713–1081, *E-mail: Timothy.Hansen@noaa.gov.*

Codex Committee on Cereals, Pulses and Legumes (adjourned sine die):

(Host Government—United States).

U.S. Delegate

Henry Kim, Ph.D., Supervisory Chemist, Division of Plant Product Safety, Office of Plant and Dairy Foods, Center for Food Safety and Applied Nutrition, Food and Drug Administration, 5100 Paint Branch Parkway, College Park, MD 20740, *Phone:* (301) 436–2023, *Fax:* (301) 436–2651, *E-mail: henry.kim@ fda.hhs.gov.*

Codex Committee on Milk and Milk Products (adjourned sine die)

(Host Government—New Zealand).

U.S. Delegate

Duane Spomer, Food Defense Advisor, Agricultural Marketing Service, U.S. Department of Agriculture, Room 1114, South Agriculture Building, 1400 Independence Avenue, SW., Washington, DC 20250, *Phone:* (202) 720–1861, *Fax:* (202) 205–5772, *E-mail: duane.spomer@usda.gov.*

Alternate Delegate

John F. Sheehan, Director, Division of Dairy and Egg Safety, Office of Plant and Dairy Foods and Beverages, Center for Food Safety and Applied Nutrition, Food and Drug Administration (HFS–306), Harvey W. Wiley Federal Building, 5100 Paint Branch Parkway, College Park, MD 20740, *Phone:* (301) 436–1488, *Fax:* (301) 436–2632, *E-mail: john.sheehan@fda.hhs.gov.*

Codex Committee on Fats and Oils

(Host Government—United Kingdom).

U.S. Delegate

Dennis M. Keefe, Ph.D., Office of Food Additive Safety, Center for Food Safety and Applied Nutrition, Food and

Drug Administration (HFS–200), Harvey W. Wiley Federal Building, 5100 Paint Branch Parkway, College Park, MD 20740–3835, *Phone:* (301) 436–1284, *Fax:* (301) 436–2972, *E-mail: dennis.keefe@fda.hhs.gov.*

Alternate Delegate

Kathleen Warner, Agricultural Research Service, U.S. Department of Agriculture, 1815 N. University Street, Peoria, IL 61604, *Phone:* (309) 681–6584, *Fax:* (309) 681–6668, *E-mail: warnerk@ncaur.usda.gov.*

Codex Committee on Cocoa Products and Chocolate

(Host Government—Switzerland).

U.S. Delegate

Michelle Smith, Ph.D., Food Technologist, Office of Plant and Dairy Foods and Beverages, Center for Food Safety and Applied Nutrition, Food and Drug Administration (HFS–306), Harvey W. Wiley Federal Building, 5100 Paint Branch Parkway, College Park, MD 20740–3835, *Phone:* (301) 436–2024, *Fax:* (301) 436–2651, *E-mail: michelle.smith@fda.hhs.gov.*

Codex Committee on Sugars

(Host Government—United Kingdom).

U.S. Delegate

Martin Stutsman, J.D., Office of Plant and Dairy Foods and Beverages, Center for Food Safety and Applied Nutrition, Food and Drug Administration (HFS–306), Harvey W. Wiley Federal Building, 5100 Paint Branch Parkway, College Park, MD 20740–3835, *Phone:* (301) 436–1642, *Fax:* (301) 436–2651, *E-mail: martin.stutsman@fda.hhs.gov.*

Codex Committee on Processed Fruits and Vegetables

(Host Government—United States).

U.S. Delegate

Dorian LaFond, International Standards Coordinator, Fruit and Vegetable Division, Agricultural Marketing Service, USDA, Room 2086, South Agriculture Building, 1400 Independence Avenue, SW., Washington, DC 20250, *Phone:* (202) 690–4944, *Fax:* (202) 720–0016, *E-mail: dorian.lafond@usda.gov.*

Alternate Delegate

Paul South, Ph.D., Division of Plant Product Safety, Office of Plant and Dairy Foods, Center for Food Safety and Applied Nutrition, Food and Drug Administration, 5100 Paint Branch Parkway, College Park, MD 20740, *Phone:* (301) 436–1640, *Fax:* (301) 436–2561, *E-mail: paul.south@fda.hhs.gov.*

Codex Committee on Vegetable Proteins (adjourned sine die)

(Host Government—Canada).

U.S. Delegate

Dr. Wilda H. Martinez, Area Director, ARS North Atlantic Area, Agricultural Research Service, U.S. Department of Agriculture, 600 E. Mermaid Lane, Wyndmoor, PA 19038, *Phone:* (215) 233–6593, *Fax:* (215) 233–6719, *E-mail: wmartinez@ars.usda.gov.*

Codex Committee on Meat Hygiene (adjourned sine die)

(Host Government—New Zealand).

U.S. Delegate

Perfecto Santiago, D.V.M., Deputy Assistant Administrator, Office of Data Integration and Food Protection, Room 3130, South Agriculture Building, Food Safety and Inspection Service, U.S. Department of Agriculture, 1400 Independence Avenue, SW., Washington, DC 20250, *Phone:* (202) 205–0452, *Fax:* (202) 690–5634, *E-mail: perfecto.santiago@fsis.usda.gov.*

Codex Committee on Natural Mineral Waters:

(Host Government—Switzerland).

U.S. Delegate

Lauren Robin, Ph.D., Review Chemist, Office of Plant and Dairy Foods, Center for Food Safety and Applied Nutrition, Food and Drug Administration, Harvey W. Wiley Federal Building, 5100 Paint Branch Parkway, College Park, MD 20740–3835, *Phone:* (301) 436–1639, *Fax:* (301) 436–2651, *E-mail: Lauren.Robin@fda.hhs.gov.*

Ad Hoc Intergovernmental Task Forces

Ad Hoc Intergovernmental Task Force on Antimicrobial Resistance

(Host Government—Republic of Korea).

U.S. Delegate

David G. White, D.V.M., Director, National Antimicrobial Resistance, Monitoring System (NARMS), U.S. Food and Drug Administration, Center for Veterinary Medicine, Office of Research, 8401 Muirkirk Road, Laurel, MD 20708, *Phone:* (301) 210–4181, *Fax:* (301) 210–4685, *E-mail: David.White@fda.hhs.gov.*

Alternate Delegate

Neena Anandaraman, D.V.M., Veterinary Medical Officer, Zoonotic Diseases & Residue Surveillance Division, Office of Public Health Science, Food Safety and Inspection Service, U.S. Department of Agriculture, Room 343, Aerospace Center, Washington, DC 20250, *Phone:* (202) 690–6429, *Fax:* (202) 690–6565, *E-mail: neena.anandaraman@fsis.usda.gov.*

Ad Hoc Intergovernmental Task Force on Foods Derived From Modern Biotechnology

(Host Government—Japan) (Dissolved).

Ad Hoc Intergovernmental Task Force on Quick Frozen Foods

(Host Government—Thailand) (Dissolved).

Ad Hoc Intergovernmental Task Force on Animal Feeding

(Host Government—Denmark) (Dissolved).

Ad hoc Codex Intertovernmental Task Force on Fruit and Vegetable Juices

(Host Government—Brazil) (Dissolved).

There are six regional coordinating committees:

Coordinating Committee for Africa
Coordinating Committee for Asia
Coordinating Committee for Europe
Coordinating Committee for Latin America and the Caribbean
Coordinating Committee for the Near East
Coordinating Committee for North America and the Southwest Pacific

Contact

Karen Stuck, United States Manager for Codex, U.S. Department of Agriculture, Office of Food Safety, Room 4861, South Agriculture Building, 1400 Independence Avenue, SW., Washington, DC 20250–3700, *Phone:* (202) 205–7760, Fax: (202) 720–3157, *E-mail: karen.stuck@osec.usda.gov.*

[FR Doc. 2010–13403 Filed 6–3–10; 8:45 am]

BILLING CODE 3410–DM–P

DEPARTMENT OF AGRICULTURE

Forest Service

Madera County Resource Advisory Committee

AGENCY: Forest Service, USDA.

ACTION: Notice of meeting.

SUMMARY: The Madera County Resource Advisory Committee will be meeting in North Fork, California on June 16th and on July 21st. The purpose of these meetings will be to make decisions on how to accept and review project proposals for the next funding cycle as authorized under the Secure Rural Schools and Community Self-Determination Act of 2000 (Pub. L. 110–343) for expenditure of Payments to States Fresno County Title II funds.

DATES: The meetings will be held on January 13, 2010 from 6 p.m. to 8:30 p.m. in Prather, CA and January 27, 2010 from 6 p.m. to 8:30 p.m. in Clovis, CA.

ADDRESSES: The meetings will be held at the Bass Lake Ranger District, 57003 Road 225, North Fork, California 93643. Send written comments to Julie Roberts, Madera County Resource Advisory Committee Coordinator, c/o Sierra National Forest, Bass Lake Ranger District, at the above address, or electronically to *jarobertsfs.fed.us.*

FOR FURTHER INFORMATION CONTACT: Julie Roberts, Madera County Resource Advisory Committee Coordinator, (559) 877–2218 ext. 3159.

SUPPLEMENTARY INFORMATION: The meetings are open to the public. Committee discussion is limited to Forest Service staff and Committee members. However, persons who wish to bring Payments to States Madera County Title II project matters to the attention of the Committee may file written statements with the Committee staff before or after the meetings. Agenda items to be covered include: (1) Discuss and agree on general operating procedures (2) elect a RAC Chair, (3) review past proposals and (4) discuss conditions and parameters for accepting future proposals.

Dated: May 24, 2010.

Dave Martin,

District Ranger.

[FR Doc. 2010–13352 Filed 6–3–10; 8:45 am]

BILLING CODE 3410–11–M

DEPARTMENT OF AGRICULTURE

Grain Inspection, Packers and Stockyards Administration

Advisory Committee Meeting

AGENCY: Grain Inspection, Packers and Stockyards Administration, USDA.

ACTION: Notice of advisory committee meeting.

SUMMARY: Pursuant to the Federal Advisory Committee Act, this constitutes notice of the upcoming meeting of the Grain Inspection, Packers and Stockyards Administration (GIPSA) Grain Inspection Advisory Committee (Advisory Committee). The Advisory Committee meets twice annually to advise the GIPSA Administrator on the programs and services that GIPSA delivers under the U.S. Grain Standards Act. Recommendations by the Advisory Committee help GIPSA better meet the needs of its customers who operate in a dynamic and changing marketplace.

DATES: June 16, 2010, 8 a.m. to 4:30 p.m.; and June 17, 2010, 8 a.m. to Noon.

ADDRESSES: The Advisory Committee meeting will take place at the Embassy Suites Kansas City-Plaza, 220 West 43rd Street, Kansas City, Missouri 64111.

Requests to orally address the Advisory Committee during the meeting or written comments may be sent to: Administrator, GIPSA, U.S. Department of Agriculture, 1400 Independence Avenue, SW., STOP 3601, Washington, DC 20250–3601. Requests and comments may also be faxed to (202) 690–2173.

FOR FURTHER INFORMATION CONTACT: Terri L. Henry by phone at (202) 205–8281, by E-mail at *Terri.L.Henry@usda.gov,* or by regular mail at Terri Henry, GIPSA, USDA, 1400 Independence Ave., SW., Room 1633–S, Stop 3642, Washington, DC 20250–3642.

SUPPLEMENTARY INFORMATION: The purpose of the Advisory Committee is to provide advice to the GIPSA Administrator with respect to the implementation of the U.S. Grain Standards Act (7 U.S.C. 71–87k). Information about the Advisory Committee is available on the GIPSA Web site at *http://www.gipsa.usda.gov.* Under the section, "I Want To * * *," select "Learn about the Grain Inspection Advisory Committee."

This meeting's agenda will include updates on international affairs, wheat standards, the Yamamoto sheller study, wheat functionality, and an overview of Federal Grain Inspection Service 2010 operations.

For a copy of the agenda please contact Terri L. Henry by phone at (202) 205–8281 or by e-mail at *Terri.L.Henry@usda.gov.*

Public participation will be limited to written statements unless permission is received from the Advisory Committee Chairperson to orally address the Advisory Committee. Written comments may be sent to the contact person designated above. The meeting will be open to the public.

Persons with disabilities who require alternative means of communication of program information or related accommodations should contact Terri L. Henry at the telephone number listed above.

J. Dudley Butler,

Administrator, Grain Inspection, Packers and Stockyards Administration.

[FR Doc. 2010–13441 Filed 6–3–10; 8:45 am]

BILLING CODE 3410–KD–P

CHEMICAL SAFETY AND HAZARD INVESTIGATION BOARD

Sunshine Act Meeting

In connection with its investigation into the natural gas explosion that occurred at the Kleen Energy power plant in Middletown, Connecticut, the United States Chemical Safety and Hazard Investigation Board (CSB) announces that it will hold a public meeting on June 28, 2010, in Connecticut. The purpose of the meeting is to consider urgent safety recommendations to the U.S. Occupational Safety and Health Administration (OSHA); the National Fire Protection Association (NFPA), the American Gas Association (AGA); the International Code Council (ICC) and the Chair of the International Fuel Gas Code Committee; the American Society of Mechanical Engineers (ASME); and other parties that result from the CSB investigation of this accident.

The meeting will begin at 6:30 p.m. in the Prince Edward Ballroom, Saint Clements Castle, 1931 Portland-Cobalt Road, Portland, Connecticut 06480.

At the meeting the CSB investigative team will present its preliminary findings on the circumstances of the accident to the three CSB board members and the public. The Board will then receive testimony from a panel of outside experts and other witnesses, who will discuss the issues raised by the case. Following a public comment period, the Board is expected to consider and vote on the draft safety recommendations.

The meeting is free and open to the public. Pre-registration is not required, but to assure adequate seating, attendees are encouraged to pre-register by e-mailing their names and affiliations to *kleen@csb.gov* by Friday, June 25, 2010.

On Sunday, February 7, 2010, Kleen Energy, a combined-cycle natural gas fueled power plant under construction in Middletown, Connecticut, experienced a catastrophic natural gas explosion that caused six deaths and at least 50 injuries.

The accident occurred during the planned cleaning of fuel gas piping, part of the commissioning and startup phase of construction. At the time of the accident workers were conducting a "gas blow," whereby natural gas is forced through the piping at a high velocity and pressure in order to remove any debris within the piping. The gas and debris were subsequently released directly to atmosphere. At the Kleen Energy construction site, workers used natural gas at a pressure of approximately 650 pounds per square

inch gauge (psig) to clean gas pipes. A total of 15 natural gas blows were completed intermittently over approximately four hours through a number of open pipe ends which were located less than 20 feet off the ground.

Efforts were made to eliminate or control potential ignition sources outside the power generation building. However, many ignition sources existed inside the building: electrical power to the building was on, welders were actively working, and diesel-fueled heaters were running.

Initial calculations by CSB investigators reveal that approximately 400,000 standard cubic feet of natural gas were released to the atmosphere near the building in the final ten minutes before the blast. Just over 2 million standard cubic feet of gas were released in total over the course of the morning. At approximately 11:15 a.m., the released natural gas found an ignition source and exploded.

The meeting will be videotaped and an official transcript will be included in the investigative file. All staff presentations are preliminary and are intended solely to allow the Board to consider the issues and factors involved in this case in a public forum. No factual analyses, conclusions, findings or recommendations of the staff should be considered final. Only after the Board has considered and approved the urgent recommendations will there be an approved final record.

Christopher W. Warner,

General Counsel.

[FR Doc. 2010–13588 Filed 6–2–10; 4:15 pm]

BILLING CODE 6350–01–P

COMMISSION ON CIVIL RIGHTS

Agenda and Notice of Public Meeting of the Connecticut Advisory Committee

Notice is hereby given, pursuant to the provisions of the rules and regulations of the U.S. Commission on Civil Rights and the Federal Advisory Committee Act, that a planning meeting of the Connecticut State Advisory Committee will convene at 10:30 a.m. on Tuesday, June 22, 2010 at the University of Connecticut, School of Law, Faculty Lounge, 55 Elizabeth Street, Hartford, Connecticut 06105. The purpose of the meeting is to consider possible findings and recommendations on a draft report about school choice, high school attainment rates, and civil rights.

Members of the public are entitled to submit written comments; the comments must be received in the regional office by July 22, 2010. The address is Eastern Regional Office, 624 9th St., NW., Washington, DC 20425. Persons wishing to e-mail their comments, or who desire additional information should contact the Eastern Regional Office at 202–376–7533 or by e-mail to: *ero@usccr.gov.*

Hearing-impaired persons who will attend the meeting and require the services of a sign language interpreter should contact the Regional Office at least ten (10) working days before the scheduled date of the meeting.

Records generated from this meeting may be inspected and reproduced at the Eastern Regional Office, as they become available, both before and after the meeting. Persons interested in the work of this advisory committee are advised to go to the Commission's Web site, *http://www.usccr.gov,* or to contact the Eastern Regional Office at the above e-mail or street address.

The meeting will be conducted pursuant to the rules and regulations of the Commission and FACA.

Dated in Washington, DC, May 28, 2010.

Peter Minarik,

Acting Chief, Regional Programs Coordination Unit.

[FR Doc. 2010–13397 Filed 6–3–10; 8:45 am]

BILLING CODE 6335–01–P

DEPARTMENT OF COMMERCE

Submission for OMB Review; Comment Request

The Department of Commerce will submit to the Office of Management and Budget (OMB) for clearance the following proposal for collection of information under the provisions of the Paperwork Reduction Act (44 U.S.C. Chapter 35).

Agency: Bureau of Industry and Security (BIS).

Title: Defense Priorities and Allocations System.

OMB Control Number: 0694–0053.

Form Number(s): None.

Type of Request: Regular submission.

Burden Hours: 14,477.

Number of Respondents: 18,000.

Average Hours Per Response: 5 seconds to 15 minutes.

Needs and Uses: This record keeping requirement is necessary for administration and enforcement of delegated authority under the Defense Production Act of 1950, as amended (50 U.S.C. App. 2061, *et seq.*) and the Selective Service Act of 1948 (50 U.S.C. App. 468). Any person who receives a priority rated order under the implementing DPAS regulation (15 CFR 700) must retain records for at least 3 years.

Affected Public: Business or other for-profit organizations.

Frequency: On occasion.

Respondent's Obligation: Required to obtain or retain benefits.

OMB Desk Officer: Jasmeet Seehra, (202) 395–3123.

Copies of the above information collection proposal can be obtained by calling or writing Diana Hynek, Departmental Paperwork Clearance Officer, (202) 482–0266, Department of Commerce, Room 6625, 14th and Constitution Avenue, NW., Washington, DC 20230 (or via the Internet at *dHynek@doc.gov).*

Written comments and recommendations for the proposed information collection should be sent within 30 days of publication of this notice to Jasmeet Seehra, OMB Desk Officer, by e-mail to *Jasmeet_K._Seehra@omb.eop.gov,* or by fax to (202) 395–5167.

Dated: June 1, 2010.

Gwellnar Banks,

Management Analyst, Office of the Chief Information Officer.

[FR Doc. 2010–13430 Filed 6–3–10; 8:45 am]

BILLING CODE 3510–33–P

DEPARTMENT OF COMMERCE

National Oceanic and Atmospheric Administration

Proposed Information Collection; Comment Request; Alaska Region Gear Identification Requirements

AGENCY: National Oceanic and Atmospheric Administration (NOAA).

ACTION: Notice.

SUMMARY: The Department of Commerce, as part of its continuing effort to reduce paperwork and respondent burden, invites the general public and other Federal agencies to take this opportunity to comment on proposed and/or continuing information collections, as required by the Paperwork Reduction Act of 1995.

DATES: Written comments must be submitted on or before August 3, 2010.

ADDRESSES: Direct all written comments to Diana Hynek, Departmental Paperwork Clearance Officer, Department of Commerce, Room 6625, 14th and Constitution Avenue, NW., Washington, DC 20230 (or via the Internet at *dHynek@doc.gov*).

FOR FURTHER INFORMATION CONTACT: Requests for additional information or copies of the information collection

instrument and instructions should be directed to Patsy A. Bearden, (907) 586–7008 or *patsy.bearden@noaa.gov.*

SUPPLEMENTARY INFORMATION:

I. Abstract

Regulations at 50 CFR part 679.24(a) require that all hook-and-line, longline pot, and pot-and-line marker buoys carried onboard or used by any vessel regulated under 50 CFR part 679 shall be marked with the vessel name and Federal fisheries permit number or Alaska Department of Fish and Game (ADF&G) vessel registration number. The regulations also specify the size and color of markings. The marking of gear aids law enforcement and enables other fishermen to report on misplaced gear.

II. Method of Collection

No information is submitted; this is a gear-marking requirement.

III. Data

OMB Control Number: 0648–0353.

Form Number: None.

Type of Review: Regular submission.

Affected Public: Business or other for-profit organizations; individuals or households.

Estimated Number of Respondents: 1,692.

Estimated Time per Response: 15 minutes per buoy.

Estimated Total Annual Burden Hours: 3,138.

Estimated Total Annual Cost to Public: $16,920.

IV. Request for Comments

Comments are invited on: (a) Whether the proposed collection of information is necessary for the proper performance of the functions of the agency, including whether the information shall have practical utility; (b) the accuracy of the agency's estimate of the burden (including hours and cost) of the proposed collection of information; (c) ways to enhance the quality, utility, and clarity of the information to be collected; and (d) ways to minimize the burden of the collection of information on respondents, including through the use of automated collection techniques or other forms of information technology.

Comments submitted in response to this notice will be summarized and/or included in the request for OMB approval of this information collection; they also will become a matter of public record.

Dated: June 1, 2010.

Gwellnar Banks,

Management Analyst, Office of the Chief Information Officer.

[FR Doc. 2010–13431 Filed 6–3–10; 8:45 am]

BILLING CODE 3510–22–P

DEPARTMENT OF COMMERCE

Foreign-Trade Zones Board

[Docket 22–2009]

Foreign-Trade Zone 203; Application for Subzone Authority; REC Silicon; Invitation for Public Comment on Preliminary Recommendation

The FTZ Board is inviting public comment on its staff's preliminary recommendation pertaining to the application by the Port of Moses Lake Public Corporation to establish a subzone at the REC Silicon facility in Moses Lake, Washington (Docket 22–2009). The staff's preliminary recommendation is for approval of the application with a restriction prohibiting admission of foreign status silicon metal subject to an anti-dumping duty (AD) or countervailing duty (CVD) order. The bases for this finding are as follows:

Analysis of the application record indicates that full approval of the request could negatively impact domestic silicon metal production. This finding is based primarily on the potential impact to domestic silicon metal prices compounded by multiple applications potentially involving avoidance of AD/CVD duties on silicon metal used in export production.

Although REC Silicon's current domestic purchases account for only a small portion of domestic silicon metal production, the company has been expanding its capacity and will need increased amounts of silicon metal as that production comes online. Thus, access to silicon metal subject to AD/CVD duties for its export production (currently over 95% of production) could encourage the company to source silicon metal subject to AD/CVD orders for its expanded production, instead of increasing domestic sourcing or sourcing imported silicon metal that is not subject to AD/CVD orders.

A key consideration in this request is the cumulative effect on domestic silicon metal prices and on the integrity of the domestic silicon metal industry's AD/CVD relief should there be multiple applications to avoid AD/CVD duties on silicon metal for export production. In addition to the REC Silicon application, a similar application is pending for Dow Corning Corporation in Kentucky and we have received indication that further requests are being prepared for additional facilities. In its application, REC Silicon indicates that if it is granted full approval, other U.S. polysilison producers will likely apply for similar benefits. Given the production capacity of REC Silicon's domestic facilities, as well as those of the other U.S. producers, the ripple effect on silicon metal suppliers would be significant and the resulting impact would likely be a decline in the U.S. price of silicon metal.

Currently, very little silicon metal subject to AD/CVD orders is imported into the United States. However, the potential increase in supply to the U.S. market from the use of silicon metal subject to AD/CVD orders at this plant and others in the industry, and the resulting price effect, would likely be significant.

In part due to the AD/CVD duties in place, U.S. silicon metal prices have increased. This has led to the recent restarting of a shuttered silicon metal production facility in New York. A weakening of the U.S. price of silicon metal could threaten the viability of this facility as well as the continuation of production at other domestic facilities.

Given the volume of silicon metal involved in the current and anticipated applications, even a limit on the amount of silicon metal subject to AD/CVD orders that could be used in the facility for export production could have a significant impact on the U.S. price of silicon metal. The timing of that impact would also be occurring as domestic silicon metal production facilities are recovering and restarting, likely due (at least in part) to the relief provided through the AD/CVD orders that are in place. The FTZ regulations require that evaluations of manufacturing authority consider, "whether the approval is consistent with trade policy and programs, and whether its net economic effect is positive" (15 CFR 400.31(a)). In this case, given the potential impact on the silicon metal industry and based on the evidence currently on the record, the staff is unable to find that the net (national) economic effect of approving the use of silicon metal subject to AD/CVD orders for export production would be positive.

While unrestricted approval could have a negative impact, the issues raised do not extend to silicon metal not subject to AD/CVD orders. No arguments or evidence have been presented to the FTZ Board in opposition to FTZ savings on silicon metal not subject to AD/CVD orders. Since REC Silicon indicated that they do not currently anticipate using silicon

metal subject to AD/CVD orders, activity under the proposed restricted approval would provide REC Silicon with the full savings estimated in the application. The company has indicated that those savings would enhance the cost competitiveness of its Washington facility, which would help to encourage continued production and employment at the facility.

Public comment on the preliminary recommendation and the bases for the finding is invited through July 12, 2010. Rebuttal comments may be submitted during the subsequent 15-day period, until July 27, 2010. Submissions (original and one electronic copy) shall be addressed to the Board's Executive Secretary at: Foreign-Trade Zones Board, U.S. Department of Commerce, Room 2111, 1401 Constitution Ave., NW., Washington, DC 20230.

For further information, contact Elizabeth Whiteman at *Elizabeth.Whiteman@trade.gov* or (202) 482–0473.

Dated: May 28, 2010.

Andrew McGilvray,

Executive Secretary.

[FR Doc. 2010–13455 Filed 6–3–10; 8:45 am]

BILLING CODE 3510–DS–P

DEPARTMENT OF COMMERCE

Foreign-Trade Zones Board

[Docket 20–2009]

Foreign-Trade Zone 29; Application for Subzone Authority; Dow Corning Corporation; Invitation for Public Comment on Preliminary Recommendation

The FTZ Board is inviting public comment on its staff's preliminary recommendation pertaining to the application by the Louisville and Jefferson County Riverport Authority to establish a subzone at the Dow Corning Corporation (Dow Corning) facilities in Carrollton, Elizabethtown and Shepherdsville, Kentucky (Docket 20–2009). The staff's preliminary recommendation is for approval of the application with a restriction prohibiting admission of foreign status silicon metal subject to an anti-dumping duty (AD) or countervailing duty (CVD) order. The bases for this finding are as follows:

Analysis of the application record indicates that full approval of the request could negatively impact domestic silicon metal production. This finding is based primarily on the potential impact to domestic silicon metal prices from the volume of production involved and the cumulative impact of multiple applications potentially involving avoidance of AD/CVD duties on silicon metal used in export production.

Dow Corning is a major U.S. consumer of silicon metal, and access to the material for its export production without the payment of AD/CVD duties would decrease the average price of silicon metal paid by the company, providing a new, lower benchmark to be used in supply negotiations. Given the volume of silicon metal consumed by the company in the U.S., the ripple effect on silicon metal suppliers could be significant and the likely resulting impact would be a decline in the U.S. price of silicon metal.

Currently, very little silicon metal subject to AD/CVD orders is imported into the United States. However, due to the size of Dow Corning's production in the U.S., and the amount of silicon metal consumed by the company's operations, the potential increase in supply to the U.S. market and resulting price effect would likely be significant.

In part due to the AD/CVD duties in place, U.S. silicon metal prices have increased. This has led to the recent restarting of a shuttered silicon metal production facility in New York. A weakening of the U.S. price of silicon metal could threaten the viability of this facility as well as the continuation of production at other domestic facilities.

The preliminary recommendation also reflects the cumulative effect on domestic silicon metal prices and on the integrity of the domestic silicon metal industry's AD/CVD relief should there be multiple applications to avoid AD/CVD duties on silicon metal for export production. In addition to the Dow Corning application, a similar application is pending for REC Silicon in Moses Lake, Washington and we have received indication that further requests are being prepared for additional facilities.

Given the volume of silicon metal involved in the current and anticipated applications, even a limit on the amount of silicon metal subject to AD/CVD orders that could be used in the facilities for export production could have a significant impact on the U.S. price of silicon metal. The timing of that impact would also be occurring as domestic silicon metal production facilities are recovering and restarting, likely due (at least in part) to the relief provided through the AD/CVD orders that are in place. The FTZ regulations require that evaluations of manufacturing authority consider, "whether the approval is consistent with trade policy and programs, and whether its net economic effect is positive" (15 CFR 400.31(a)). In this case, given the potential impact on the silicon metal industry and based on the evidence currently on the record, the staff is unable to find that the net (national) economic effect of approving the use of silicon metal subject to AD/CVD orders for export production would be positive.

While unrestricted approval could have a negative impact, the issues raised do not extend to silicon metal not subject to AD/CVD orders. No arguments or evidence have been presented to the FTZ Board in opposition to FTZ savings on silicon metal not subject to AD/CVD orders and on other imported components. Such savings would allow for duty deferral, inverted tariff, scrap and export savings on imported silicon metal and other components not subject to AD/CVD orders. In addition, the facilities could benefit from logistical savings involved in FTZ operations. The savings from restricted approval would constitute a significant portion of those projected in the application and could help encourage continued production and employment at Dow Corning's Kentucky facilities.

Public comment on the preliminary recommendation and the bases for the finding is invited through July 12, 2010. Rebuttal comments may be submitted during the subsequent 15-day period, until July 27, 2010. Submissions (original and one electronic copy) shall be addressed to the Board's Executive Secretary at: Foreign-Trade Zones Board, U.S. Department of Commerce, Room 2111, 1401 Constitution Ave., NW., Washington, DC 20230.

For further information, contact Elizabeth Whiteman at *Elizabeth.Whiteman@trade.gov* or (202) 482–0473.

Dated: May 28, 2010.

Andrew McGilvray,

Executive Secretary.

[FR Doc. 2010–13454 Filed 6–3–10; 8:45 am]

BILLING CODE 3510–DS–P

DEPARTMENT OF COMMERCE

United States Patent and Trademark Office

[Docket No.: PTO–P–2010–0035]

Enhanced Examination Timing Control Initiative; Notice of Public Meeting

AGENCY: United States Patent and Trademark Office, Commerce.

ACTION: Notice of public meeting; request for comments.

SUMMARY: This notice announces a public meeting to solicit public opinions on an initiative being considered by the United States Patent and Trademark Office (USPTO) to provide applicants with greater control over when their applications are examined and to enhance work sharing between intellectual property offices. Under the initiative, for applications filed in the USPTO that are not based on a prior foreign-filed application (*e.g.,* that do not claim foreign priority benefit), applicant would be able to: (1) Request prioritized examination (Track I); (2) for non-continuing applications, request a delay lasting up to 30 months in docketing for examination (Track III); or (3) obtain processing under the current procedure (Track II) by not requesting either (1) or (2). For applications filed in the USPTO that are based on a prior foreign-filed application, no action would be taken by the USPTO until the USPTO receives a copy of the search report, if any, and first office action from the foreign office and an appropriate reply to the foreign office action as if the foreign office action was made in the application filed in the USPTO. Following or concurrent with the submission of the foreign office action and reply, applicant may request prioritized examination or obtain processing under the current procedure.

This initiative aims both to provide applicants with the type of examination they need and to reduce the overall pendency of patent applications (which currently stands at almost three years). Overall pendency would be decreased in three ways: (1) Increased resources in Track 1 would result in increased output; (2) reuse of search and examination work done by other offices would result in greater efficiency; and (3) applicants who chose Track III because their applications were of lower value might ultimately decide not to pursue their application examination efforts that had been expended on the applications. As a part of the three-tracks, an applicant may request and pay for a supplemental search from a participating intellectual property granting office. Any member of the public may submit written comments on this initiative being considered by the USPTO.

DATES AND TIMES: The public meeting will be held on July 20, 2010, beginning at 1:30 p.m.

Persons interested in attending the meeting must register by 5 p.m. Eastern Standard Time (EST) on July 16, 2010.

Written comments must be submitted by August 20, 2010.

ADDRESSES: The public meeting will be held at the USPTO, in the South Auditorium of Madison West, 600 Dulany Street, Alexandria, VA 22314.

Written comments should be sent by electronic mail message over the Internet addressed to *3trackscomments@uspto.gov.* Comments may also be submitted by mail addressed to: Mail Stop Comments-Patents, Commissioner for Patents, P.O. Box 1450, Alexandria, VA 22313–1450, marked to the attention of Robert A. Clarke. Although comments may be submitted by mail, submission via e-mail to the above address is preferable.

The written comments will be available for public inspection at the Office of the Commissioner for Patents, located in Madison East, Tenth Floor, 600 Dulany Street, Alexandria, Virginia, and will be available via the USPTO Internet Web site (address: *http://www.uspto.gov).* Because comments will be made available for public inspection, information that is not desired to be made public, such as an address or phone number, should not be included.

FOR REGISTRATION TO GIVE A PRESENTATION IN THE MEETING: If you wish to make an oral presentation at the meeting, you must register by sending an e-mail to the e-mail address, *3trackscomments@uspto.gov,* by 5 p.m. EST on July 13, 2010. See the registration information provided below.

FOR FURTHER INFORMATION CONTACT: Robert A. Clarke ((571) 272–7735), Deputy Director, Office of Patent Legal Administration, directly by phone, by e-mail to *Robert.Clarke@uspto.gov,* or by mail addressed to: Mail Stop Comments-Patents, Commissioner for Patents, P.O. Box 1450, Alexandria, VA 22313–1450. For further information on supplemental searches, contact Mary Critharis, 571–272–8468, Senior Patent Counsel, External Affairs, directly by phone, or by e-mail to *Mary.Critharis@uspto.gov.*

SUPPLEMENTARY INFORMATION: This notice announces a public meeting to solicit public opinions on an initiative being considered by the USPTO to provide applicants with greater control over when their applications are examined and to promote greater efficiency in the patent examination process. For applications filed in the USPTO which are not based on a prior foreign-filed application (*e.g.,* that do not claim foreign priority benefit under 35 U.S.C. 119(a)–(d)), an applicant could: (1) Request prioritized examination; (2) for non-continuing applications, request an applicant-controlled delay lasting up to 30 months prior to docketing for examination; or (3) obtain processing under the current procedure by not requesting either (1) or (2). For applications filed in the USPTO that are based on a prior foreign-filed application, no action would be taken by the USPTO until the USPTO received, in the U.S. application: (1) A copy of the search report, if any; (2) a copy of the first office action from the foreign office where the application was originally filed; and (3) an appropriate reply to the foreign office action. Where the foreign office action indicated that the foreign-filed application was allowable, all that would be required for the appropriate reply would be notice to the USPTO. Where one or more rejections were made in the foreign office action, applicant's reply could include an amendment but would have to include arguments regarding why the claims in the USPTO-filed application were allowable over the evidence relied upon in the foreign office action. Following or concurrent with the submission of the foreign office action and reply, applicant could request prioritized examination or obtain processing under the current procedure. This proposal would increase the efficiency of the examination of these applications by avoiding or reducing duplication of efforts by the office of first filing and the USPTO. Because efficiency gains are anticipated in the roughly one half of all applications that are filed first abroad, the result should be substantial improvement in the USPTO's performance. By contrast, under the PTO's primary current mechanism for worksharing, the patent prosecution highway program, scaling up has been limited by the fact that it remains voluntary and can only be utilized in situations where the USPTO has not already begun its examination work. Perhaps for this reason, major patent filing jurisdictions like the Japanese and European patent office have already adopted office-driven systems in which they address first the applications for which they are the office of first filing.

Since the requirement to provide a copy of the search report, first action and an appropriate reply is being considered to avoid or reduce duplication of effort, the USPTO seeks comment on whether this requirement should be limited to first filings at offices that have qualified as international searching authorities under PCT Article 16. In addition, in order to avoid delays in disclosure, the USPTO seeks comment on whether the requirement to provide a copy of the search report, first action, and an

appropriate reply (which would result in examination delay at the office of second filing) should be limited to applications that are published.

While it is believed that most applicants will continue to file applications first in their national or regional office based on business needs or costs of translation, comment is also requested on whether the USPTO should anticipate a larger number of applications being filed at the USPTO first rather than an applicant's national office. Additionally, would this filing pattern change if (as proposed in various patent law reform bills) a foreign filing date could be used as a prior art date under US law?

The idea of office-driven worksharing, or SHARE ("Strategic Handling of Applications for Rapid Examination") has already been the subject of some public commentary.

On October 21, 2009, the USPTO published a Notice in the **Federal Register** inviting the public to submit written comments and participate in a roundtable discussion on work sharing. *See Request for Comments and Notice of Roundtable on Work Sharing for Patent Applications,* 74 FR 54028 (October 21, 2009). Many of the comments regarding SHARE raised the concern that delayed examination of the foreign origin applications may work a disadvantage to USPTO first filers with respect to the patent term adjustment (PTA) that may accrue. This concern could be addressed by giving all applicants some control on when their application is examined so that the applicant can best benefit from the patenting process. Specifically, under the current proposal, those who file first in a foreign office can choose subsequently to accelerate in the USPTO. Some were also concerned that SHARE would only work well if coordinated with other offices. The coordination has already started with some offices. For example, the USPTO and the Korean Intellectual Property Office (KIPO) are conducting a small-scale pilot to gather empirical data and test the feasibility of the SHARE concept. More recently, the USPTO and the United Kingdom Intellectual Property Office (UKIPO) committed to develop a plan to optimize reuse of work on patent applications that are jointly filed with the USPTO and UKIPO.

Others suggested that the search or examination fees be reduced or delayed. The instant proposal permits deferral of certain fees if Track III examination is requested. Because many comments focused on examination delays in the office of first filing, comments to this notice are requested on whether PTA should be limited by a request by applicant for deferred examination in the office of first filing. Similarly, comments are also requested on whether PTA should be limited if the applicant does not request accelerated examination in the office of first filing.

The USPTO also intends to harmonize the existing examination procedures for applications having been granted accelerated or "special" status including: (1) Applications under the accelerated examination program; (2) applications under the various patent prosecution highway programs; (3) applications advanced under other programs under 37 CFR 1.102 (*e.g.,* applicant's age or health); or (4) national stage applications advanced out of turn because an international preliminary examination report (IPER) prepared by the United States International Preliminary Examining Authority or a written opinion on the international application prepared by the United States International Searching Authority states that the criteria of novelty, inventive step (non-obviousness), and industrial applicability, as defined in PCT Article 33(1)–(4), have been satisfied for all of the claims presented in the application entering the national stage. The USPTO is holding a public meeting and inviting public comments to seek views on whether this initiative should go forward and what changes should be considered. Further meetings may be announced by the USPTO, as appropriate.

The USPTO recognizes that the traditional "one-size fits all" examination timing may not provide applicants much opportunity to choose the examination timing they need. Therefore, in addition to the current standard procedure (Track II), the USPTO is considering providing applicants with greater ability to seek prioritized examination (Track I) or, for non-continuing applications that do not claim the benefit of a prior foreign-filed application, the ability to seek an applicant controlled up to 30-month queue prior to docketing for examination (Track III). By allowing applicants some control over the timing of examination, it is anticipated that examination resources would be better aligned with the needs of innovators.

Prioritized Examination (Track I): For some applicants with a currently financed plan to commercialize or exploit their innovation or a need to have more timely examination results to seek additional funding, more rapid examination is necessary. While some programs are currently available to prioritize applications (*e.g.,* the accelerated examination program and the petition to make special program), some applicants neither want to perform the search and analysis required by the accelerated examination program nor can they seek special status based on the conditions set forth in 37 CFR 1.102. For such applicants, the USPTO is proposing optional prioritized examination upon applicant's request and payment of a cost recovery fee. A request for prioritized examination may be made in a USPTO first-filed application at any time and may be made in any other application only after receipt of a copy of the search report, if any, and first action on the merits from the intellectual property office in which the relied-upon application was filed and an appropriate reply to that action in the application filed in the USPTO. On granting of prioritized status, the application would be placed in the queue for prioritized examination.

The fee would be set at a level to provide the resources necessary to increase the work output of the USPTO so that the aggregate pendency of non-prioritized applications would not increase due to work being done on the prioritized application. The fee would also be set to recover any other additional costs associated with processing the prioritized application. For example, if work output is to be increased by hiring new examiners, then the fee for prioritized examination would include the cost of hiring and training a sufficient number of new employees to offset the production work used to examine prioritized applications. Under the USPTO's current statutory authority, the USPTO is not permitted to discount the fee for small entity applicants. Should the USPTO's authority to set fees be enhanced, it is anticipated that the USPTO would discount this fee for small and micro entity applicants, given the substantial fee that would need to be charged to recover all of the costs associated with the contemplated service.

The USPTO is also considering limiting the number of claims in a prioritized application to four independent and thirty total claims. In addition, the USPTO is considering requiring early publication of prioritized applications so that applications would be published shortly after a request for prioritization is granted, or eighteen months from the earliest filing date claimed, whichever is earlier.

All applications prioritized on payment of a fee, or accelerated or advanced out-of-turn under existing programs, would be placed in a single queue for examination on the merits and

would be taken up out-of-turn relative to other new or amended applications. The goals for handling applications in this queue would be to provide a first Office action on the merits within four months and a final disposition within twelve months of prioritized status being granted. If this process is implemented, the USPTO anticipates that it would provide statistics on its progress in meeting these goals on its Internet Web site.

To maximize the benefit of this track, applicant should consider one or more of the following: (1) Acquiring a good knowledge of the state of the prior art to be able to file the application with a clear specification having a complete schedule of claims from the broadest that the applicant believes he is entitled in view of the state of the prior art to the narrowest that the applicant is willing to accept; (2) filing replies that are completely responsive to the prior Office action and within the reply period (shortened) set in the Office action; and (3) being prepared to conduct interviews with the examiner.

Traditional Timing (Track II): Applications for which neither prioritization nor an applicant-controlled up to 30-month queue prior to docketing for examination is requested will be processed traditionally, except that applicants may request prioritized examination at any time (*e.g.,* on filing of a notice of appeal) and, for any non-continuing application, applicants may request an applicant-controlled up to 30-month queue prior to being placed on the docket for examination on the merits. An application that claims the benefit of a prior-filed foreign application will not be docketed for examination in Track II until: (1) A copy of the search report, if any, (2) a copy of the first action on the merits by the intellectual property office in which the priority application was filed, and (3) a reply to that action in the application filed at the USPTO has been received.

An applicant-controlled up to 30-month queue prior to docketing (Track III): Some applicants file an application just prior to the statutory bar date but before a commercially viable plan for exploitation of the innovation has been developed or financed. To better provide for the timing of examination that such applicants desire and to provide a similar time period to that provided internationally, the USPTO is considering permitting any applicant in an application that does not claim benefit of a prior-filed foreign application or prior non-provisional application to select, on filing or in reply to a notice to file missing parts, an applicant-controlled up to 30-month queue prior to docketing for examination. In order to avoid delays in notice to the public, any application requesting Track III must also be published as an 18-month patent application publication. An application granted this status would be placed in a queue for applicant to request examination and pay the examination fee with the surcharge (if not already paid) within thirty months of the actual filing date of the application or any relied-upon provisional application (*i.e.,* to which benefit is claimed under 35 U.S.C. 119(e)). Failure to request examination within the 30-month period would result in abandonment of the application. The request for examination and examination fee (and surcharge) would be due on the 30-month date but could be submitted early (*e.g.,* on filing of the application) with a request that the application remain in the pre-examination queue for a period of time (*e.g.,* up to 30 months from filing). On expiration of the time period, the application would be placed in the queue for examination.

On receipt of the request for this queue, the USPTO would determine if the application was ready for publication as a patent application publication (except for the receipt of the examination fee) and determine if any request for nonpublication made on filing had been rescinded. If both conditions were met, the application would be placed in a queue to await a request for examination and payment of the examination fee. If the application was not ready for publication, a requirement to place the application in condition for publication would be made and, once satisfied, the application would be placed in the 30-month queue. The request for examination and payment may be made at any time during the 30-month period. If no request is made within the 30-month period, the application would be held abandoned. The examination fee and the surcharge may be paid within the 30-month period or may be submitted after a timely request for examination is filed on notice of non-payment by the USPTO, along with any required extension of time fees.

Upon receipt of the examination request and fee, the application would be placed in the queue for examination, but the receipt date of the examination request would be used as the "date in queue." Thus, the application will be taken up for examination as if the request date was the application's actual filing date. If applicants determine that more rapid examination is desirable, then they may request (and pay the required fee) for prioritized examination while the application is in the queue for examination.

Currently, the USPTO is considering a rule to offset any positive PTA accrued in a Track III application when applicant requests that the application be examined after the aggregate average period to issue a first Office action on the merits. For example, if the aggregate average time to issue a first Office action is 20 months and applicant requests that the application be examined at month 30, the proposed PTA reduction would be 10 months beginning on the expiration of the 20-month period and ending on the date on which applicant requested examination to begin. The overlap with the aggregate average period when the USPTO would not be able to have issued a first Office action on the merits would not be treated as an offsetting reduction.

Similarly, for an application in any of the three tracks that claims foreign priority, the USPTO is considering a rule to offset positive PTA accrued in the application when applicant files the required documents (that include a copy of the search report, if any, and first office action from the foreign office and an appropriate reply to the foreign office action as if the foreign office action was made in the application filed at the USPTO) after the aggregate average period to issue a first Office action on the merits. For example, if the aggregate average time to issue a first Office action is 20 months and applicant submits the required documents 30 months after the filing of the application, then the proposed PTA reduction would be 10 months beginning on the expiration of the 20-month period and ending on the date of the filing of the required documents. Thus, delays by foreign offices beyond the aggregate average time for the USPTO to issue a first Office action on the merits would be an offsetting reduction against any positive PTA accrued by the delay in issuing a first Office action while the USPTO awaits the preparation of a search report and first action by the office of first filing.

In Tracks I and II, if the U.S. application claims the benefit of a prior-filed foreign application, and the relied-upon foreign application is abandoned prior to an action on the merits being made available, applicant must notify the USPTO and request that the application be treated for examination queuing purposes as if the foreign priority claim had not been made. The USPTO is considering making the failure to notify the USPTO within three months of the abandonment in the foreign office trigger a PTA offset as the

USPTO would not appreciate the need to treat the application as if first-filed in the USPTO until such notice is given. Similarly, if the office of first filing has a practice of not producing actions on the merits, applicant would need to notify the USPTO that the application should be treated for examination queuing purposes as if the foreign priority claim had not been made.

The USPTO is also considering negotiating with one or more intellectual property granting offices (IPGOs) to provide an optional service for applicants at the USPTO to request that the USPTO obtain from one or more IPGOs a supplemental search report. This supplemental search report will be considered in preparation of the first Office action on the merits by the examiner. An additional search will be conducted by the examiner at the USPTO. This option would be subject to the USPTO negotiating appropriate agreements with one or more IPGOs. The USPTO is also considering providing a short period for applicant to review and make any appropriate amendments or remarks after the supplemental search is transmitted prior to preparing the first action.

Comments on one or more of the following questions would be helpful:

1. Should the USPTO proceed with any efforts to enhance applicant control of the timing of examination?

2. Are the three tracks above the most important tracks for innovators?

3. Taking into account possible efficiency concerns associated with providing too many examination tracks, should more than three tracks be provided?

4. Do you support the USPTO creating a single queue for examination of all applications accelerated or prioritized (*e.g.,* any application granted special status or any prioritized application under this proposal)? This would place applications made special under the "green" technology initiative, the accelerated examination procedure and this proposal in a single queue. For this question assume that a harmonized track would permit the USPTO to provide more refined and up-to-date statistics on performance within this track. This would allow users to have a good estimate on when an application would be examined if the applicant requested prioritized examination.

5. Should an applicant who requested prioritized examination of an application prior to filing of a request for continued examination (RCE) be required to request prioritized examination and pay the required fee again on filing of an RCE? For this question assume that the fee for prioritized examination would need to be increased above the current RCE fee to make sure that sufficient resources are available to avoid pendency increases of the non-prioritized applications.

6. Should prioritized examination be available at any time during examination or appeal to the Board of Patent Appeals and Interferences (BPAI)?

7. Should the number of claims permitted in a prioritized application be limited? What should the limit be?

8. Should other requirements for use of the prioritized track be considered, such as limiting the use of extensions of time?

9. Should prioritized applications be published as patent application publications shortly after the request for prioritization is granted? How often would this option be chosen?

10. Should the USPTO provide an applicant-controlled up to 30-month queue prior to docketing for examination as an option for non-continuing applications? How often would this option be chosen?

11. Should eighteen-month patent application publication be required for any application in which the 30-month queue is requested?

12. Should the patent term adjustment (PTA) offset applied to applicant-requested delay be limited to the delay beyond the aggregate USPTO pendency to a first Office action on the merits?

13. Should the USPTO suspend prosecution of non-continuing, non-USPTO first-filed applications to await submission of the search report and first action on the merits by the foreign office and reply in USPTO format?

14. Should the PTA accrued during a suspension of prosecution to await the foreign action and reply be offset? If so, should that offset be linked to the period beyond average current backlogs to first Office action on the merits in the traditional queue?

15. Should a reply to the office of first filing office action, filed in the counterpart application filed at the USPTO as if it were a reply to a USPTO Office action, be required prior to USPTO examination of the counterpart application?

16. Should the requirement to delay USPTO examination pending the provision of a copy of the search report, first action from the office of first filing and an appropriate reply to the office of first filing office action be limited to where the office of first filing has qualified as an International Searching Authority?

17. Should the requirement to provide a copy of the search report, first action from the office of first filing and an appropriate reply to the office of first filing office action in the USPTO application be limited to where the USPTO application will be published as a patent application publication?

18. Should there be a concern that many applicants that currently file first in another office would file first at the USPTO to avoid the delay and requirements proposed by this notice? How often would this occur?

19. How often do applicants abandon foreign filed applications prior to an action on the merits in the foreign filed application when the foreign filed application is relied upon for foreign priority in a U.S. application? Would applicants expect to increase that number, if the three track proposal is adopted?

20. Should the national stage of an international application that designated more than the United States be treated as a USPTO first-filed application or a non-USPTO first-filed application, or should it be treated as a continuing application?

21. Should the USPTO offer supplemental searches by IPGOs as an optional service?

22. Should the USPTO facilitate the supplemental search system by receiving the request for supplemental search and fee and transmitting the application and fee to the IPGO? Should the USPTO merely provide criteria for the applicant to seek supplemental searches directly from the IPGO?

23. Would supplemental searches be more likely to be requested in certain technologies? If so, which ones and how often?

24. Which IPGO should be expected to be in high demand for providing the service, and by how much? Does this depend on technology?

25. Is there a range of fees that would be appropriate to charge for supplemental searches?

26. What level of quality should be expected? Should the USPTO enter into agreements that would require quality assurances of the work performed by the other IPGO?

27. Should the search be required to be conducted based on the U.S. prior art standards?

28. Should the scope of the search be recorded and transmitted?

29. What language should the search report be transmitted in?

30. Should the search report be required in a short period after filing, e.g., within six months of filing?

31. How best should access to the application be provided to the IPGO?

32. How should any inequitable conduct issues be minimized in providing this service?

33. Should the USPTO provide a time period for applicants to review and make any appropriate comments or amendments to their application after the supplemental search has been transmitted before preparing the first Office action on the merits?

Registration Information: The USPTO plans to make the meeting available via Web cast. Web cast information will be available on the USPTO's Internet Web site before the meeting. The written comments and list of the meeting participants and their associations will be posted on the USPTO's Internet Web site (*http://www.uspto.gov*).

When registering, please provide the following information: (1) Your name, title, and, if applicable, company or organization, address, phone number, and e-mail address; and (2) if you wish to make a presentation, the specific topic or issue to be addressed and the approximate desired length of your presentation.

There is no fee to register for the public meeting and registration will be on a first-come, first-serve basis. Early registration is recommended because seating is limited. Registration on the day of the public meeting will be permitted on a space-available basis beginning at 1:30 p.m. Eastern Standard Time, on July 20, 2010.

The USPTO will attempt to accommodate all persons who wish to make a presentation at the meeting. After reviewing the list of speakers, the USPTO will contact each speaker prior to the meeting with the amount of time available and the approximate time that the speaker's presentation is scheduled to begin. Speakers must then send the final electronic copies of their presentations in Microsoft PowerPoint or Microsoft Word to *3trackscomments@uspto.gov* by July 16, 2010, so that the presentation can be displayed in the Auditorium.

If you need special accommodations due to a disability, please inform the contact person (*see* **FOR FURTHER INFORMATION CONTACT**) by July 16, 2010.

Dated: May 25, 2010.

David J. Kappos,

Under Secretary of Commerce for Intellectual Property and Director of the United States Patent and Trademark Office.

[FR Doc. 2010–13244 Filed 6–1–10; 8:45 am]

BILLING CODE 3510–16–P

COMMITTEE FOR PURCHASE FROM PEOPLE WHO ARE BLIND OR SEVERELY DISABLED

Procurement List Proposed Additions and Deletions

AGENCY: Committee for Purchase From People Who Are Blind or Severely Disabled.

ACTION: Proposed Additions to and Deletions From Procurement List.

SUMMARY: The Committee is proposing to add to the Procurement List products and services to be furnished by nonprofit agencies employing persons who are blind or have other severe disabilities, and to delete services previously furnished by such agencies.

DATES: *Comments Must Be Received on or Before:* July 5, 2010.

ADDRESSES: Committee for Purchase From People Who Are Blind or Severely Disabled, Jefferson Plaza 2, Suite 10800, 1421 Jefferson Davis Highway, Arlington, Virginia, 22202–3259.

FOR FURTHER INFORMATION OR TO SUBMIT COMMENTS CONTACT: Barry S. Lineback, Telephone: (703) 603–7740, Fax: (703) 603–0655, or e-mail *CMTEFedReg@AbilityOne.gov.*

SUPPLEMENTARY INFORMATION: This notice is published pursuant to 41 U.S.C. 47(a)(2) and 41 CFR 51–2.3. Its purpose is to provide interested persons an opportunity to submit comments on the proposed actions.

Additions

If the Committee approves the proposed additions, the entities of the Federal Government identified in this notice will be required to furnish the products and services listed below from nonprofit agencies employing persons who are blind or have other severe disabilities.

Regulatory Flexibility Act Certification

I certify that the following action will not have a significant impact on a substantial number of small entities. The major factors considered for this certification were:

1. If approved, the action will not result in any additional reporting, recordkeeping or other compliance requirements for small entities other than the small organizations that will furnish the products and services to the Government.

2. If approved, the action will result in authorizing small entities to furnish the products and services to the Government.

3. There are no known regulatory alternatives which would accomplish the objectives of the Javits-Wagner-O'Day Act (41 U.S.C. 46–48c) in connection with the products and services proposed for addition to the Procurement List.

Comments on this certification are invited. Commenters should identify the statement(s) underlying the certification on which they are providing additional information.

End of Certification

The following products and services are proposed for addition to Procurement List to be furnished by the nonprofit agencies listed:

Products

Cold Weather, Polypropylene Undershirts

NSN: 8415–01–546–0124—Undershirt Size X Small Short
NSN: 8415–01–546–0128—Undershirt Size X Small Regular
NSN: 8415–01–546–0160—Undershirt Size Small Short
NSN: 8415–01–538–8598—Undershirt Size Small Regular
NSN: 8415–01–546–0166—Undershirt Size Small Long
NSN: 8415–01–538–8614—Undershirt Size Medium Regular
NSN: 8415–01–546–0305—Undershirt Size Medium Long
NSN: 8415–01–538–8621—Undershirt Size Large Regular
NSN: 8415–01–538–8701—Undershirt Size Large Long
NSN: 8415–01–538–8705—Undershirt Size X Large Regular
NSN: 8415–01–538–8711—Undershirt Size X Large Long
NSN: 8415–01–546–0362—Undershirt Size X Large X Long
NSN: 8415–01–546–0369—Undershirt Size XX Large Regular
NSN: 8415–01–546–0370—Undershirt Size XX Large Long
NSN: 8415–01–546–0374—Undershirt Size XX Large X Long
NPAs: Knox County Association for Retarded Citizens, Inc., Vincennes, IN.
Peckham Vocational Industries, Inc., Lansing, MI.
Contracting Activity: Defense Logistics Agency, Defense Supply Center Philadelphia, Philadelphia, PA.
Coverage: C-list for an additional 25% of the requirements of the Department of Defense as aggregated by the Defense Supply Center Philadelphia.

Services

Service Type/Location: Custodial/Grounds Services, Donna Border Station, U.S. Highway 281 and FM 493, Donna, TX.
NPA: Mavagi Enterprises, Inc., San Antonio, TX.
Contracting Activity: Public Buildings Service, Building Services Team, Fort Worth, TX.

Service Type/Location: Custodial Services, FAA ARTCC Complex, 37075 Aviation Lane, Hilliard, FL.
NPA: The Right 2 Work Corporation,

Jacksonville, FL.
Contracting Activity: Dept of Trans, Federal Aviation Administration, College Park, GA.
Service Type/Location: Document Assembly, Northern Research Station, 1992 Folwell Avenue, St. Paul, MN.
NPA: Opportunity Partners Inc., Minnetonka, MN.
Contracting Activity: Department of Agriculture, St. Paul, MN.
Service Type/Locations: Janitorial Services, Mt. Shasta Ranger Station, 204 W. Alma St., Mt. Shasta, CA.
McCloud Ranger Station, 2019 Forest Road, McCloud, CA.
NPA: Siskiyou Opportunity Center, Inc., Mt. Shasta, CA.
Contracting Activity: Department of Agriculture, Forest Service, Shasta-Trinity National Forest, Redding, CA.
Service Type/Location: Grounds Maintenance, National Weather Service Forecast Office, 400 Parkway Road, Charleston, WV.
NPA: Goodwill Industries of Kanawha Valley, Inc., Charleston, WV.
Contracting Activity: DEPT OF COMMERCE, National Oceanic and Atmospheric Administration, Norfolk, VA.
Service Type/Location: Custodial and Grounds Maintenance, U.S. Courthouse, 327 Church Street, Rockford, IL.
NPA: Goodwill Industries of Southeastern Wisconsin, Inc., Milwaukee, WI.
Contracting Activity: General Services Administration, Public Buildings Service, Property Management Division, Springfield, IL.
Service Type/Location: Mailroom/Courier Services, San Juan Customhouse Building, 1 La Puntilla Street, San Juan, PR.
NPA: The Corporate Source, Inc., New York, NY.
Contracting Activity: Department of Homeland Security, Bureau of Customs and Border Protection, Office of Procurement, Washington, DC.
Service Type/Location: Recycling Services, Kennedy Space Center, NASA Mail Code: OP–ES, Kennedy Space Center, FL.
NPA: Bridges BTC, Inc., Rockledge, FL.
Contracting Activity: National Aeronautics and Space Administration, Kennedy Space Center, Kennedy Space Center, FL.
Service Type/Location: Custodial Services, Child Development Center, U.S. Military Academy, West Point, NY.
NPA: New Dynamics, Inc., Middletown, NY.
Contracting Activity: U.S. Army Mission and Installation Contracting Command, Directorate of Contracting—West Point, NY.
Service Type/Location: Custodial Services, C4ISR Campus, Aberdeen Proving Ground, MD.
NPAs: The Chimes, Inc., Baltimore, MD, Alliance, Inc., Baltimore, MD.
Contracting Activity: U.S. Army Mission and Installation Contracting Command, APG, Directorate of Contracting, Aberdeen Proving Ground, MD.
Service Type/Location: Custodial Services, Woodlawn Child Care Center, Social Security Administration, Baltimore, MD.
NPA: Goodwill Industries of the Chesapeake, Inc., Baltimore, MD.
Contracting Activity: Social Security Administration, Office of Acquisitions and Grants, Baltimore, MD.
Service Type/Location: Custodial Services, Headquarters Complex, Centers for Medicaid and Medicare Services, Woodlawn, MD.
NPA: Didlake, Inc., Manassas, VA.
Contracting Activity: General Services Administration, Public Building Service, Programs, Policy and Compliance Branch, Philadelphia, PA.
Service Type/Location: Custodial Services, U.S. Department of Energy, Forrestal Building, 1000 Independence Avenue, SW., Washington, DC.
NPA: Didlake, Inc., Manassas, VA.
Contracting Activity: U.S. Department of Energy, Office of Procurement Services, Washington, DC.
Service Type/Location: Custodial Services (Basewide), Joint Base Lewis-MChord, WA.
NPA: Skookum Education Programs, Bremerton, WA.
Contracting Activity: U.S. Army Mission and Installation Contracting Command, CCMI–RCK, Fort Knox, KY.
Service Type/Location: Custodial Services (Depot-wide), Tobyhanna Army Depot, Tobyhanna, PA.
NPA: Allied Health Care Services, Scranton, PA.
Contracting Activity: Tobyhanna Army Depot, Contract Operations Division, Tobyhanna, PA.

Deletions

Regulatory Flexibility Act Certification

I certify that the following action will not have a significant impact on a substantial number of small entities. The major factors considered for this certification were:

1. If approved, the action will not result in additional reporting, recordkeeping or other compliance requirements for small entities.
2. If approved, the action may result in authorizing small entities to provide services to the Government.
3. There are no known regulatory alternatives which would accomplish the objectives of the Javits-Wagner-O'Day Act (41 U.S.C. 46–48c) in connection with the services proposed for deletion from the Procurement List.

End of Certification

The following services are proposed for deletion from the Procurement List:

Services

Service Type/Location: Administrative Services, U.S. Department of Commerce: National Weather Service NOAA, National Reconditioning Center, Kansas City, MO.
NPA: Alphapointe Association for the Blind, Kansas City, MO.
Contracting Activity: Dept of Commerce, National Oceanic and Atmospheric Administration, Norfolk, VA.
Service Type/Location: Janitorial/Custodial Services, Caribou-Targhee Forest Supervisor Office, U.S. Forest Service, St. Anthony, ID.
NPA: Development Workshop, Inc., Idaho Falls, ID.
Contracting Activity: Department of Agriculture, Procurement Operations Division, Washington, DC.

Barry S. Lineback,

Director, Business Operations.

[FR Doc. 2010–13472 Filed 6–3–10; 8:45 am]

BILLING CODE 6353–01–P

COMMITTEE FOR PURCHASE FROM PEOPLE WHO ARE BLIND OR SEVERELY DISABLED

Procurement List Additions

AGENCY: Committee for Purchase From People Who Are Blind or Severely Disabled.

ACTION: Additions to the Procurement List.

SUMMARY: This action adds to the Procurement List products and a service to be furnished by nonprofit agencies employing persons who are blind or have other severe disabilities.

DATES: *Effective Date:* 7/5/2010.

ADDRESSES: Committee for Purchase From People Who Are Blind or Severely Disabled, Jefferson Plaza 2, Suite 10800, 1421 Jefferson Davis Highway, Arlington, Virginia, 22202–3259.

FOR FURTHER INFORMATION CONTACT: Barry S. Lineback, Telephone: (703) 603–7740, Fax: (703) 603–0655, or e-mail *CMTEFedReg@AbilityOne.gov.*

SUPPLEMENTARY INFORMATION:

Additions

On 4/9/2010 (75 FR 18164–18165), the Committee for Purchase From People Who Are Blind or Severely Disabled published notice of proposed additions to the Procurement List.

After consideration of the material presented to it concerning capability of qualified nonprofit agencies to provide the products and a service and impact of the additions on the current or most recent contractors, the Committee has determined that the products and a service listed below are suitable for procurement by the Federal Government under 41 U.S.C. 46–48c and 41 CFR 51–2.4.

Regulatory Flexibility Act Certification

I certify that the following action will not have a significant impact on a substantial number of small entities. The major factors considered for this certification were:

1. The action will not result in any additional reporting, recordkeeping or other compliance requirements for small entities other than the small organizations that will furnish the products and a service to the Government.

2. The action will result in authorizing small entities to furnish the products and a service to the Government.

3. There are no known regulatory alternatives which would accomplish the objectives of the Javits-Wagner-O'Day Act (41 U.S.C. 46–48c) in connection with the products and a service proposed for addition to the Procurement List.

End of Certification

Accordingly, the following products and service are added to the Procurement List:

Products

Label, Pressure Sensitive Recycled Copier

NSN: 7530–01–207–4363.
NSN: 7530–00–NIB–0902.
NSN: 7530–01–086–4518.
NPA: North Central Sight Services, Inc., Williamsport, PA.
Contracting Activity: Federal Acquisition Service, GSA/FSS OFC SUP CTR—Paper Products.
Coverage: A-List for the total government requirement as aggregated by the General Services Administration.
NSN: 7520–00–NIB–2101—Pen Set, Rosewood (Army Strong).
NSN: 7520–00–NIB–2102—Pen Set, Rosewood (Reserve).
NPA: Industries for the Blind, Inc., West Allis, WI.
Contracting Activity: DEPT OF THE ARMY, XR W6BB ACA KNOX.
Coverage: C-List for 100% of the requirements for the U.S. Army Recruiting Command as aggregated by the Mission and Installation Contracting Command, Fort Knox, KY.

Service

Service Type/Location: Administrative Services, 426 5th Avenue, Sheppard AFB, TX.
NPA: Work Services Corporation, Wichita Falls, TX.
Contracting Activity: Dept of the Air Force, FA3020 82 CONS LGC, Sheppard AFB, TX.

Barry S. Lineback,

Director, Business Operations.

[FR Doc. 2010–13473 Filed 6–3–10; 8:45 am]

BILLING CODE 6353–01–P

CONSUMER PRODUCT SAFETY COMMISSION

Sunshine Act Meetings

TIME AND DATE: Wednesday, June 9, 2010; 10 a.m.–12 Noon.

PLACE: Hearing Room 420, Bethesda Towers, 4330 East West Highway, Bethesda, Maryland.

STATUS: Closed to the Public.

MATTERS TO BE CONSIDERED:

Compliance Status Report

The Commission staff will brief the Commission on the status of compliance matters.

For a recorded message containing the latest agenda information, call (301) 504–7948.

CONTACT PERSON FOR MORE INFORMATION: Todd A. Stevenson, Office of the Secretary, U.S. Consumer Product Safety Commission, 4330 East West Highway, Bethesda, MD 20814 (301) 504–7923.

Dated: June 2, 2010.

Todd A. Stevenson,

Secretary.

[FR Doc. 2010–13515 Filed 6–2–10; 11:15 am]

BILLING CODE 6355–01–P

DEPARTMENT OF DEFENSE

Department of the Army

Notice of Intent To Prepare an Environmental Impact Statement (EIS) for Training Land Expansion for Fort Benning, GA

AGENCY: Department of the Army, DoD.

ACTION: Notice of Intent (NOI).

SUMMARY: The Department of the Army intends to prepare an EIS to analyze environmental and socioeconomic impacts connected with the proposed acquisition of up to 82,800 additional acres of land for training in the vicinity of Fort Benning, Georgia. The land is needed to provide Fort Benning's Soldiers and units with the capability to conduct realistic maneuver training exercises through the battalion level as they train at home station to deploy to support operations abroad. This action will also support the training requirements of the Maneuver Center of Excellence (MCoE). The EIS will analyze four alternatives that are deemed feasible and meet the purpose and need for this Proposed Action, as well as the no action alternative of not acquiring more training land.

ADDRESSES: Written comments may be mailed to Fort Benning Public Affairs, Attention: Mr. Bob Purtiman, Building 35, Room 375, Fort Benning, GA 31905, or e-mailed to *land.benning@us.army.mil*.

FOR FURTHER INFORMATION CONTACT: Mr. Robert Purtiman, Fort Benning Public Affairs Office, at (706) 545–8830 from 9 a.m. to 4 p.m. *e.d.s.t.*

SUPPLEMENTARY INFORMATION: Fort Benning, located in west-central Georgia and east-central Alabama, is home to the: MCoE, including the Infantry and Armor Schools; 3d Brigade Combat Team, 3d Infantry Division; 75th Ranger Regiment; 11th Engineer Battalion; 13th Combat Support Service Battalion; and other organizations. Fort Benning's primary missions include supporting the training of these units in order to provide Soldiers with the most challenging and realistic training possible.

Fort Benning is currently comprised of approximately 182,000 contiguous acres of federally-owned land. The recently published Army Training Strategy has placed a focus on the conduct of battalion level maneuver training at home station for units subordinate to the Brigade Combat Teams. To meet this training requirement at Fort Benning, the Army has identified a need to acquire up to 82,800 acres of additional land to enhance realistic training conditions to better meet the training needs of the MCoE and deployable units stationed at Fort Benning. This additional land will enhance training of the units at Fort Benning and will allow Soldiers to train to more realistic standards in preparation for deployment. This action will also enable the Army to move certain Scout Leaders Course training off the current Installation to newly acquired property to comply with the U.S. Fish and Wildlife Service biological opinion for the MCoE.

The alternatives being studied include lands in several distinct study areas southeast and south of Fort Benning in Chattahoochee, Marion, Webster, and Stewart counties in Georgia and southwest of Fort Benning in Russell County, Alabama. The Army will also analyze the No Action Alternative, which will evaluate the impacts of not acquiring additional training land around Fort Benning. Resource areas which may be impacted as a result of converting current land use to support of military training, include air quality, traffic, noise, water resources, biological resources, cultural resources, socioeconomics, utilities, land use, and solid and hazardous materials/waste, as well as cumulative environmental

effects. Significant impacts could occur to socio-economics and land use.

The public is invited to participate in the scoping process, which begins with the publication of this Notice of Intent in the **Federal Register** and will last for 30 days. The scoping process will include at least three public scoping meetings, which are opportunities for the public to receive information about the proposed action and alternatives, and to assist the Army in determining issues related to the proposed acquisition to be addressed in the EIS. These meetings will be held in communities surrounding Fort Benning and the specific details of the meetings will be announced in local media sources. The public will also be invited to review and comment on the Draft EIS when it is available for review. Comments from the public will be considered before any decision is made regarding implementing the proposed action at Fort Benning.

Dated: May 24, 2010.

Addison D. Davis, IV,

Deputy Assistant Secretary of the Army (Environment, Safety and Occupational Health).

[FR Doc. 2010–13443 Filed 6–3–10; 8:45 am]

BILLING CODE 3710–08–P

DEPARTMENT OF EDUCATION

Office of Elementary and Secondary Education

Overview Information; Impact Aid Discretionary Construction Grant Program; Notice inviting applications for New Awards Using Fiscal Year 2009 Funds.

Catalog of Federal Domestic Assistance (CFDA) Number: 84.041C.

DATES:

Applications Available: June 4, 2010.

Deadline for Transmittal of Applications: July 6, 2010.

Deadline for Intergovernmental Review: August 3, 2010.

Full Text of Announcement

I. Funding Opportunity Description

Purpose of Program: The Impact Aid Discretionary Construction Grant program provides grants for emergency repairs and modernization of school facilities to certain eligible local educational agencies (LEAs) that receive formula Impact Aid funds.

Priority: In this notice, the Secretary is soliciting applications only for Priority 1 emergency repair grants. We will not accept applications for Priority 2 emergency repair or modernization grants at this time. In accordance with 34 CFR 75.105(b)(2)(ii) and (iv), this priority is from section 8007(b)(2)(A) of the Elementary and Secondary Education Act of 1965, as amended (Act) (20 U.S.C. 7707(b)), and the regulations for this program in 34 CFR 222.177.

Absolute Priority: For this competition using FY 2009 funds, this is an absolute priority. Under 34 CFR 75.105(c)(3) we consider only applications that meet this priority.

This priority is: Priority 1 emergency repair grants. An LEA is eligible to apply for an emergency grant under the first priority of section 8007(b) of the Act if it—

(a) Is eligible to receive formula construction funds for fiscal year 2009 under section 8007(a) of the Act (20 U.S.C. 7707(a));

(b)(1) Has no practical capacity to issue bonds;

(2) Has minimal capacity to issue bonds and has used at least 75 percent of its bond limit; or

(3) Is eligible to receive funds for fiscal year 2009 for heavily impacted districts under section 8003(b)(2) of the Act (20 U.S.C. 7707(b)(2)); and

(c) Has a school facility emergency that the Secretary has determined poses a health or safety hazard to students and school personnel.

Note: For each of the competitions held under this program with FYs 2002, 2003, 2004, 2005, and 2008 funds, the amounts requested by applicants for Priority 1 grants exceeded the funds available. (The Impact Aid Discretionary grant program was not funded in FYs 2006 and 2007.)

Program Authority: 20 U.S.C. 7707(b).

Applicable Regulations: (a) The Education Department General Administrative Regulations (EDGAR) in 34 CFR parts 75 (except for 34 CFR 75.600 through 75.617), 77, 79, 80, 82, 84, 85, 97, 98, and 99. (b) The regulations for this program in 34 CFR part 222.

Note: The regulations in 34 CFR part 79 apply to all applicants except federally recognized Indian tribes.

II. Award Information

Type of Award: Discretionary grant.

Estimated Available Funds: $17,509,000.

Estimated Range of Awards: $50,000–$5,000,000.

Estimated Average Size of Awards: $1,600,000.

Estimated Number of Awards: 11.

Note: The Department is not bound by any estimates in this notice.

Project Period: Up to 60 months. We will determine each project period based on the nature of the project proposed and the time needed to complete the project. We will specify this period in the grant award document.

III. Eligibility Information

1. *Eligible Applicants:* To be eligible for an emergency repair grant, an LEA must enroll a high percentage (at least 40 percent) of federally connected children in average daily attendance (ADA) who reside on Indian lands or who have a parent on active duty in the U.S. uniformed services, have a school that enrolls a high percentage of one of these types of students, be eligible for funding for heavily impacted LEAs under section 8003(b)(2) of the Act, or meet the specific numeric requirements regarding bonding capacity. In making emergency grant awards, the Secretary must also consider the LEA's total assessed value of real property that may be taxed for school purposes, its use of available bonding capacity, and the nature and severity of the school facility emergency.

2.a. *Cost Sharing or Matching:* See 20 U.S.C. 7707(b)(5) and 34 CFR 222.174 and 222.191 through 222.193. In reviewing proposed awards, the Secretary considers the funds available to the grantee from other sources, including local, State, and other Federal funds. Consistent with 34 CFR 222.192, applicants will be required to submit financial reports for FYs 2007, 2008, and 2009, or the most recently available financial reports showing closing balances for all school funds. If significant amounts were available at the close of FY 2009 that are not obligated for other purposes, those funds will be considered as available for the proposed emergency repair project, which may reduce or eliminate the award for an emergency grant.

b. *Supplement-Not-Supplant:* As outlined in 34 CFR 222.174, grants made under this program are subject to supplement, not supplant funding provisions. Grant funds under this program may not be used to supplant or replace other available non-Federal construction money.

IV. Application and Submission Information

1. *Address to Request Application Package:* An electronic application is available at: *http://e-grants.ed.gov.* For assistance, please contact Kristen Walls-Rivas, Impact Aid Program, U.S. Department of Education, 400 Maryland Avenue, SW., room 3C155, Washington, DC 20202–6244. Phone: 1–202–260–1357. Fax: 1–866–799–1272. E-mail: *Kristen.Walls-Rivas@ed.gov.*

If you use a telecommunications device for the deaf (TDD), call the Federal Relay Service (FRS), toll free, at 1–800–877–8339.

Individuals with disabilities can obtain a copy of the application package in an accessible format (*e.g.,* braille, large print, audiotape, or computer diskette) by contacting the person or team listed under *Accessible Format* in section VIII of this notice.

2. *Content and Form of Application Submission:* Requirements concerning the content of an application, together with the forms you must submit, are in the application package for this program.

Page Limit: We strongly recommend that applicants limit their responses in each applicable narrative section to two pages. The narrative should be double spaced using a 12-point font or greater. The page should have a margin that is one inch or greater.

3. *Submission Dates and Times:*

Applications Available: June 4, 2010.

Deadline for Transmittal of Applications: July 6, 2010.

Applications for grants under this competition must be submitted electronically using the Electronic Grant Application System (e-Application) available through the Department's e-Grants system. For information (including dates and times) about how to submit your application electronically or by mail or hand delivery if you qualify for an exception to the electronic submission requirement, please refer to section IV.7. *Other Submission Requirements* of this notice.

Individuals with disabilities who need an accommodation or auxiliary aid in connection with the application process should contact the person listed under *For Further Information Contact* in section VII of this notice.

Deadline for Intergovernmental Review: August 3, 2010.

4. *Intergovernmental Review:* This program is subject to Executive Order 12372 and the regulations in 34 CFR part 79. Information about Intergovernmental Review of Federal Programs under Executive Order 12372 is in the application package for this program.

5. *Funding Restrictions:* Except for applicants with no practical capacity to issue bonds, as defined in 34 CFR 222.176, an eligible applicant's award amount(s) may not be more than 50 percent of the total cost of an approved project(s) and may not exceed four million dollars during any four-year period. See 34 CFR 222.193. While applicants may submit multiple applications, the Department may limit awards for a single applicant based on factors specified in 34 CFR 75.217, including the applicant's performance and use of funds under a prior award. Unallowable costs are specified in 34 CFR 222.173. Grant recipients must, in accordance with Federal, State, and local laws, use emergency grants for permissible construction activities at public elementary and secondary school facilities. The scope of a selected facilities project will be identified as part of the final grant award conditions. A grantee must also ensure that its construction expenditures under this program meet the requirements of 34 CFR 222.172 (allowable program activities) and 34 CFR 222.173 (prohibited activities).

We reference additional regulations outlining funding restrictions in the *Applicable Regulations* section of this notice.

6. *Data Universal Numbering System Number, Taxpayer Identification Number, and Central Contractor Registry:* To do business with the Department of Education, (1) you must have a Data Universal Numbering System (DUNS) number and a Taxpayer Identification Number (TIN); (2) you must register both of those numbers with the Central Contractor Registry (CCR), the Government's primary registrant database; and (3) you must provide those same numbers on your application.

You can obtain a DUNS number from Dun and Bradstreet. A DUNS number can be created within one business day.

If you are a corporate entity, agency, institution, or organization, you can obtain a TIN from the Internal Revenue Service. If you are an individual, you can obtain a TIN from the Internal Revenue Service or the Social Security Administration. If you need a new TIN, please allow 2–5 weeks for your TIN to become active.

The CCR registration process may take five or more business days to complete. If you are currently registered with the CCR, you may not need to make any changes. However, please make certain that the TIN associated with your DUNS number is correct. Also note that you will need to update your CCR registration on an annual basis. This may take three or more business days to complete.

7. *Other Submission Requirements:* Applications for grants under this competition must be submitted electronically unless you qualify for an exception to this requirement in accordance with the instructions in this section.

a. *Electronic Submission of Applications.*

Applications for grants under the Impact Aid Discretionary Construction Grant Program, CFDA number 84.041C, must be submitted electronically using the e-Application system available through the Department's e-Grants system, accessible through the e-Grants portal page at: *http://e-grants.ed.gov.*

We will reject your application if you submit it in paper format unless, as described elsewhere in this section, you qualify for one of the exceptions to the electronic submission requirement *and* submit, no later than two weeks before the application deadline date, a written statement to the Department that you qualify for one of these exceptions. Further information regarding calculation of the date that is two weeks before the application deadline date is provided later in this section under *Exception to Electronic Submission Requirement.*

While completing your electronic application, you will be entering data online that will be saved into a database. You may not e-mail an electronic copy of a grant application to us.

Please note the following:

- You must complete the electronic submission of your grant application by 4:30:00 p.m., Washington, DC time, on the application deadline date. The e-Application system will not accept an application for this competition after 4:30:00 p.m., Washington, DC time, on the application deadline date. Therefore, we strongly recommend that you do not wait until the application deadline date to begin the application process.
- The regular hours of operation of the e-Grants Web site are 6:00 a.m. Monday until 7:00 p.m. Wednesday; and 6:00 a.m. Thursday until 8:00 p.m. Sunday, Washington, DC time. Please note that the system is unavailable between 8:00 p.m. on Sundays and 6:00 a.m. on Mondays, and between 7:00 p.m. on Wednesdays and 6:00 a.m. on Thursdays, Washington, DC time, for maintenance. Any modifications to these hours are posted on the e-Grants Web site.
- You will not receive additional point value because you submit your application in electronic format, nor will we penalize you if you qualify for an exception to the electronic submission requirement, as described elsewhere in this section, and submit your application in paper format.
- You must submit all documents electronically, including all information you typically provide on the following forms: The Application for Discretionary Construction Program under Section 8007(b) and all necessary

signature pages. The cover page and the independent certification may be sent either by facsimile or by e-mail. All additional narrative documents must be attached to the application as files in a .DOC (document), .RTF (rich text), or .PDF (Portable Document) format. If you upload a file type other than the three file types specified in this paragraph or submit a password protected file, we will not review that material.

• Prior to submitting your electronic application, you may wish to print a copy of it for your records.

• After you electronically submit your application, you will receive an automatic acknowledgment that will include a PR/Award number (an identifying number unique to your application).

• By 4:30:00 p.m., Washington, DC time, on the application deadline date, you must fax or e-mail a signed copy of the cover page and the emergency certification form for the Application for Discretionary Construction Program under Section 8007(b) to the Impact Aid Program after following these steps:

(1) Print a copy of the application from e-Application for your records. You should print these forms in landscape page orientation to ensure the entire application is printed correctly. To print using the landscape orientation: (1) Open the application in e-Application, (2) Go to the forms page, (3) Click the printer icon next to the form link in e-Application, (4) Go to File on your Internet browser menu, (5) Select page set up, (6) Select the Landscape under page orientation, (7) Click "OK," and (8) Print page.

(2) Have the applicant's Authorized Representative date and sign the cover page. The local certifying official must sign the certification for an emergency application. These forms must be submitted by 4:30:00 p.m., Washington, DC time, on the application deadline date in order to be considered for funding under this program.

(3) Place the PR/Award number in the upper right hand corner of the hard-copy signature page of the Application for Discretionary Construction Program under Section 8007(b).

(4) Fax or e-mail the signed cover page and independent certification for the Discretionary Construction Program under Section 8007(b) to the Impact Aid Program to 1–866–799–1272 or by e-mail to *Impact.Aid@ed.gov.* These forms must be submitted by 4:30:00 p.m., Washington, DC time, on the application deadline date in order to be considered for funding under this program.

• We may request that you provide us additional signed forms at a later date.

Application Deadline Date Extension in Case of e-Application System Unavailability: If you are prevented from electronically submitting your application on the application deadline date because the e-Application system is unavailable, we will grant you an extension of one business day to enable you to transmit your application electronically, by mail, or by hand delivery. We will grant this extension if—

(1) You are a registered user of e-Application and you have initiated an electronic application for this competition; and

(2) (a) The e-Application system is unavailable for 60 minutes or more between the hours of 8:30 a.m. and 3:30 p.m., Washington, DC time, on the application deadline date; or

(b) The e-Application system is unavailable for any period of time between 3:30 p.m. and 4:30:00 p.m., Washington, DC time, on the application deadline date.

We must acknowledge and confirm these periods of unavailability before granting you an extension. To request this extension or to confirm our acknowledgment of any system unavailability, you may contact either (1) the person listed elsewhere in this notice under **FOR FURTHER INFORMATION CONTACT** (*see* VII. Agency Contact) or (2) the e-Grants help desk at 1–888–336–8930. If the e-Application system is unavailable due to technical problems with the system and therefore the application deadline is extended, an e-mail will be sent to all registered users who have initiated an e-Application. Extensions referred to in this section apply only to the unavailability of the Department's e-Application system.

Exception to Electronic Submission Requirement: You qualify for an exception to the electronic submission requirement, and may submit your application in paper format, if you are unable to submit an application through the e-Application system because—

• You do not have access to the Internet; or

• You do not have the capacity to upload large documents to the Department's e-Application system; *and*

• No later than two weeks before the application deadline date (14 calendar days or, if the fourteenth calendar day before the application deadline date falls on a Federal holiday, the next business day following the Federal holiday), you mail or fax a written statement to the Department, explaining which of the two grounds for an exception prevents you from using the Internet to submit your application. If you mail your written statement to the Department, it must be postmarked no later than two weeks before the application deadline date. If you fax your written statement to the Department, we must receive the faxed statement no later than two weeks before the application deadline date.

Address and mail or fax your statement to: Kristen Walls-Rivas, Impact Aid Program, U.S. Department of Education, 400 Maryland Avenue, SW., room 3C155, Washington, DC 20202–6244. FAX: 1–866–799–1272.

Your paper application must be submitted in accordance with the mail or hand delivery instructions described in this notice.

b. *Submission of Paper Applications by Mail.*

If you qualify for an exception to the electronic submission requirement, you may mail (through the U.S. Postal Service or a commercial carrier) your application to the Department. You must mail the original and two copies of your application, on or before the application deadline date, to the Department at the following address: U.S. Department of Education, Impact Aid Program, Attention: (CFDA Number 84.041C), Room 3C155, 400 Maryland Avenue, SW., Washington, DC 20202–6244.

You must show proof of mailing consisting of one of the following:

(1) A legibly dated U.S. Postal Service postmark,

(2) A legible mail receipt with the date of mailing stamped by the U.S. Postal Service,

(3) A dated shipping label, invoice, or receipt from a commercial carrier, or

(4) Any other proof of mailing acceptable to the Secretary of the U.S. Department of Education.

If you mail your application through the U.S. Postal Service, we do not accept either of the following as proof of mailing:

(1) A private metered postmark, or

(2) A mail receipt that is not dated by the U.S. Postal Service.

If your application is postmarked after the application deadline date, we will not consider your application.

Note: The U.S. Postal Service does not uniformly provide a dated postmark. Before relying on this method, you should check with your local post office.

c. *Submission of Paper Applications by Hand Delivery.*

If you qualify for an exception to the electronic submission requirement, you (or a courier service) may deliver your paper application to the Department by hand. You must deliver the original and two copies of your application, by hand,

on or before the application deadline date, to the Department at the following address:

U.S. Department of Education, Impact Aid Program, Attention: (CFDA Number 84.041C), Room 3C155, 400 Maryland Avenue, SW., Washington, DC 20202–6244.

The Impact Aid Program accepts hand deliveries daily between 8:00 a.m. and 4:30:00 p.m., Washington, DC time, except Saturdays, Sundays, and Federal holidays. **Note for Mail or Hand Delivery of Paper Applications:** If you mail or hand deliver your application to the Department—

(1) You must indicate on the envelope—if not provided by the Department—the CFDA number, including suffix letter, if any, of the competition under which you are submitting your application; and

(2) The Impact Aid Program will mail to you a notification of receipt of your grant application. If you do not receive this grant notification within 15 business days from the application deadline date, you should call the U.S. Department of Education Impact Aid Program at (202) 260–3858.

V. Application Review Information

1. *Selection Criteria:* The selection criteria for this program are from 20 U.S.C. 7707(b)(4) and (b)(6), and are further clarified in 34 CFR 222.183 and 222.187 and described in the following paragraphs. The Secretary gives distinct weight to the listed selection criteria. The maximum score for each criterion is indicated in parentheses. Within each criterion, the Secretary evaluates each factor equally, unless otherwise specified. The maximum score that an application may receive is 100 points.

(1) Need for project/severity of the school facility problem to be addressed by the proposed project. (up to 30 points)

(a) Justification that the proposed project will address a valid emergency, and consistency of the emergency description and the proposed project with the certifying local official's statement.

(b) Impact of the emergency condition on the health and safety of the building occupants or on program delivery. Applicants should describe the systems or areas of the facility involved, *e.g.,* HVAC, roof, floor, windows; the type of space affected, such as instructional, resource, food service, recreational, general support, or other areas; the percentage of building occupants affected by the emergency; and the importance of the facility or affected area to the instructional program.

(2) Project urgency. (up to 28 points)

(a) Risk to occupants if the facility condition is not addressed. Applicants should describe projected increased future costs; the anticipated effect of the proposed project on the useful life of the facility or the need for major construction; and the age and condition of the facility and date of last renovation of affected areas.

(b) The justification for rebuilding, if proposed.

(3) Effects of Federal presence. (up to 30 points total)

(a) Amount of non-taxable Federal property in the applicant LEA (percentage of Federal property divided by 10); (up to 10 points)

(b) The number of federally connected children identified in section 8003(a)(1)(A), (B), (C), and (D) of the Act in the LEA (percentage of identified children in LEA divided by 10); (up to 10 points)

(c) The number of federally connected children identified in section 8003(a)(1)(A), (B), (C), and (D) of the Act in the school facility (percentage of identified children in school facility divided by 10); (up to 10 points)

(4) Ability to respond or pay. (up to 12 points total)

(a) The percentage an LEA has used of its bonding capacity. Four points will be distributed based on this percentage so that an LEA that has used 100 percent of its bonding capacity receives all four points and an LEA that has used less than 25 percent of its bond limit receives only one point. LEAs that do not have limits on bonded indebtedness established by their States will be evaluated by assuming that their bond limit is 10 percent of the assessed value of real property in the LEA. LEAs deemed to have no practical capacity to issue bonds will receive all four points. (up to four points)

(b) Assessed value of real property per student (Applicant LEA's total assessed valuation of real property per pupil as a percentile ranking of all LEAs in the State). Points will be distributed by providing all four points to LEAs in the State's poorest quartile and only one point to LEAs in the State's wealthiest quartile. (up to four points)

(c) Total tax rate for capital or school purposes (applicant LEA's tax rate for capital or school purposes as a percentile ranking of all LEAs in the State). If the State authorizes a tax rate for capital expenditures, then these data must be used; otherwise, data on the total tax rate for school purposes are used. Points will be distributed by providing all four points to LEAs in the State's highest-taxing quartile and only one point to LEAs in the State's lowest-taxing quartile. (up to four points)

2. *Review and Selection Process:* Upon receipt, Impact Aid program staff will screen all applications to eliminate any applications that do not meet the eligibility standards, are incomplete, or are late. Applications that do not contain a signed cover page and a signed independent certification received by the Impact Aid Program by 4:30:00 p.m., Washington, DC time, on the application deadline date are considered incomplete and will not be considered for funding. Program staff will also calculate the scores for each application under criteria (3) and (4). Panel reviewers will assess the applications under criteria (1) and (2).

(a) Applications are ranked based on the total number of points received during the review process. Those with the highest scores will be at the top of the funding slate.

(b) While applicants may submit multiple applications, the Department may limit awards for a single applicant based on factors specified in 34 CFR 75.217, including the applicant's performance and use of funds under a prior award.

(c) For applicants that request funding for new construction and that are selected for funding, the Impact Aid Program will request a feasibility of construction study prior to making an award determination. The independent third party study should demonstrate that the area upon which the construction will occur is suitable for construction and will be able to sustain the new facility or addition. This study should include information to show that the soil is stable, the site is suitable for construction and the existing infrastructure can serve and sustain the new facility.

VI. Award Administration Information

1. *Award Notices:* If your application is successful, we notify your U.S. Representative and U.S. Senators and send you a Grant Award Notification (GAN). We may notify you informally, also.

If your application is not evaluated or not selected for funding, we notify you.

2. *Administrative and National Policy Requirements:* We identify administrative and national policy requirements in the application package and reference these and other requirements in the *Applicable Regulations* section of this notice.

We reference the regulations outlining the terms and conditions of an award in the *Applicable Regulations* section of this notice and include these and other specific conditions in the GAN. The GAN also incorporates your approved

application as part of your binding commitments under the grant.

3. *Reporting:* At the end of your project period, you must submit a final performance report, including financial information, as directed by the Secretary. If you receive a multi-year award, you must submit an annual performance report that provides the most current performance and financial expenditure information as directed by the Secretary under 34 CFR 75.118. In general, grantees must comply with applicable reporting requirements in 34 CFR parts 75 and 80. In addition, grantees will be required to provide periodic performance and financial reports, as specified in individual grant award conditions and 34 CFR 222.195. The Secretary may also require more frequent performance reports under 34 CFR 75.720(c). For specific requirements on reporting, please go to *http://www.ed.gov/fund/grant/apply/appforms/appforms.html.*

4. *Performance Measures:* The Department has established the following performance measure for this program: an increasing percentage of LEAs receiving Impact Aid Construction funds will report that the overall condition of their school buildings is adequate. Data for this measure will be reported to the Department on Table 10 of the application for Impact Aid Section 8003 Basic Support Payments.

VII. Agency Contact

For Further Information Contact: Kristen Walls-Rivas, Impact Aid Program, U.S. Department of Education, 400 Maryland Avenue, SW., room 3C155, Washington, DC 20202–6244. Telephone: (202) 260–3858 or by e-mail: *Impact.Aid@ed.gov.*

If you use a TDD, call the FRS, toll free, at 1–800–877–8339.

VIII. Other Information

Accessible Format: Individuals with disabilities can obtain this document and a copy of the application package in an accessible format (*e.g.,* braille, large print, audiotape, or computer diskette) on request to the program contact person listed under **FOR FURTHER INFORMATION CONTACT** in section VII of this notice.

Electronic Access to This Document: You can view this document, as well as all other documents of this Department published in the **Federal Register,** in text or Adobe Portable Document Format (PDF) on the Internet at the following site: *http://www.ed.gov/news/fedregister.*

To use PDF you must have Adobe Acrobat Reader, which is available free at this site. If you have questions about using PDF, call the U.S. Government Printing Office (GPO), toll free, at 1–888–293–6498; or in the Washington, DC, area at (202) 512–1530.

Note: The official version of this document is the document published in the **Federal Register.** Free Internet access to the official edition of the **Federal Register** and the Code of Federal Regulations is available on GPO Access at: *http://www.gpoaccess.gov/nara/index.html.*

Dated: June 1, 2010.

Thelma Meléndez de Santa Ana,

Assistant Secretary for Elementary and Secondary Education.

[FR Doc. 2010–13491 Filed 6–3–10; 8:45 am]

BILLING CODE 4000–01–P

ENVIRONMENTAL PROTECTION AGENCY

[FRL–9159–2]

Draft National Pollutant Discharge Elimination System (NPDES) Pesticide General Permit for Point Source Discharges From the Application of Pesticides

AGENCY: Environmental Protection Agency (EPA).

ACTION: Notice of draft permit and notice of public meetings.

SUMMARY: All ten EPA Regions today are proposing a draft NPDES general permit for point source discharges from the application of certain pesticides to waters of the United States. Once finalized, this permit will be available to operators in those areas where EPA is the NPDES permitting authority. This action is in response to the Sixth Circuit Court's ruling that vacated an EPA regulation that excluded discharges from the application of pesticides to or over, including near waters of the United States from the need to obtain an NPDES permit if the application was done in accordance with other laws. EPA requested and was granted a two-year stay of the Court's mandate to provide time to draft and implement the permit noticed today. The stay of the mandate expires on April 9, 2011; where after, NPDES permits will be required for all point source discharges to waters of the United States of biological pesticides, and chemical pesticides that leave a residue.

This **Federal Register** notice briefly summarizes the requirements in this draft general permit for pesticides applications to waters of the U.S. EPA is soliciting public comment on all aspects of the draft NPDES permit. This **Federal Register** notices also includes a list of specific issues about which the Agency is particularly asking for comment. Supporting documentation to the permit is contained in an accompanying fact sheet. The public is encouraged to read this fact sheet to better understand the permit requirements. The fact sheet and permit can be found at *http://www.epa.gov/npdes/pesticides.*

DATES: Comments on the draft general permit must be received on or before July 19, 2010.

ADDRESSES: Submit your comments, identified by Docket ID No. EPA–HQ–OW–2010–0257, by one of the following methods:

1. *http://www.regulations.gov:* Follow the online instructions for submitting comments.

2. *E-mail: ow-docket@epa.gov.*

3. *Mail to:* Water Docket, U.S. Environmental Protection Agency, Mail Code: 2822T, 1200 Pennsylvania Avenue, NW., Washington, DC 20460, Attention: Docket ID No. EPA–HQ–OW–2010–0257.

4. *Hand Delivery:* EPA Docket Center, EPA West Room 3334, 1301 Constitution Avenue, NW., Washington, DC 20004, Attention: Docket ID No. EPA–HQ–OW–2010–0257. Such deliveries are only accepted during the Docket's normal hours of operation, and special arrangements should be made for deliveries of boxed information.

Instructions: Direct your comments to Docket ID No. EPA–HQ–OW–2010–0257. EPA's policy is that all comments received will be included in the public docket without change and may be made available online at *http://www.regulations.gov*, including any personal information provided, unless the comment includes information claimed to be Confidential Business Information (CBI) or other information whose disclosure is restricted by statute. Do not submit information that you consider to be CBI or otherwise protected through *http://www.regulations.gov* or e-mail. The *http://www.regulations.gov* Web site is an "anonymous access" system, which means EPA will not know your identity or contact information unless you provide it in the body of your comment. If you send an e-mail comment directly to EPA without going through www.regulations.gov your e-mail address will be automatically captured and included as part of the comment that is placed in the public docket and made available on the Internet. If you submit an electronic comment, EPA recommends that you include your name and other contact information in the body of your comment and with any disk or CD–ROM you submit. If EPA

cannot read your comment due to technical difficulties and cannot contact you for clarification, EPA may not be able to consider your comment. Electronic files should avoid the use of special characters, any form of encryption, and be free of any defects or viruses. For additional information about EPA's public docket visit the EPA Docket Center homepage at *http://www.epa.gov/epahome/dockets.htm*.

Docket: All documents in the docket are listed in the *http://www.regulations.gov* index. Although listed in the index, some information is not publicly available, *e.g.*, CBI or other information whose disclosure is restricted by statute. Certain other material, such as copyrighted material, will be publicly available only in hard copy. Publicly available docket materials are available either electronically in www.regulations.gov or in hard copy at a docket facility. The Office of Water (OW) Docket Center is open from 8:30 until 4:30 p.m., Monday through Friday, excluding legal holidays. The OW Docket Center telephone number is (202) 566–2426, and the Docket address is OW Docket, EPA West, Room 3334, 1301 Constitution Avenue, NW., Washington, DC 20004. The Public Reading Room is open from 8:30 a.m. to 4:30 p.m., Monday through Friday, excluding legal holidays. The telephone number for the Public Reading Room is (202) 566–1744.

Public meetings and public hearing: EPA will hold three (3) public meetings in: Albuquerque, New Mexico on June 14, 2010; Boise, Idaho on June 16, 2010; Boston, Massachusetts on June 21, 2010; and a public hearing in Washington, DC on June 23, 2010. The focus of each meeting/hearing is to present the draft general permit and the basis for the draft permit requirements, and to answer questions concerning the draft permit. At these meetings, any person may provide written or oral statements and data pertaining to the draft permit. The date, time and location of the public meetings and public hearing are as follows:

- *Albuquerque, New Mexico:* Monday, June 14, 2010, at the CNM Workforce Training Center, Room 101, 5600 Eagle Rock Avenue, NE, Albuquerque, New Mexico, from 12 p.m.–3 p.m.
- *Boise, Idaho:* Wednesday, June 16, 2010, at the Bureau of Reclamation, Rooms 206 & 219, 1150 North Curtis Road, Boise, Idaho from 9 a.m. to 12 p.m.
- *Boston, Massachusetts:* Monday, June 21, 2010, at EPA Region 1, 5 Post Office Square—Suite 100, Conference Room 1529, Boston, MA 02109–3912, from 1 p.m. to 4 p.m.
- *Washington, DC:* Wednesday, June 23, 2010, at the EPA East Building, Room 1153, 1301 Constitution Avenue, NW., Washington, DC 20004, from 10 a.m. to 1 p.m.

If you would like to present a statement at the public hearing in Washington, DC, please contact Virginia Garelick at 202–564–2316 to register your intent to provide a public statement. Speakers will be given up to three minutes (or as time allows) to provide their comments on a first come first served basis. Any additional comments will need to be provided in writing. EPA will consider all comments received and will include copies of such in the Administrative Record.

EPA encourages interested and potentially affected stakeholders to attend one of the scheduled public meetings and provide oral or written comments. Please note that the public meetings may close early if all business is finished. Oral or written comments received at the public meetings will be entered into the Docket for this permit. If you are unable to attend, you may submit comments to the EPA Water Docket at the address identified in the **ADDRESSES** section listed above.

More information on these meetings will be available on the Internet at *http://www.epa.gov/npdes/pesticides*, including any additional dates and locations if scheduled. Due to limited seating, those wishing to attend EPA's public meetings are asked to please send an e-mail message containing their name, telephone number and organization to Virginia Garelick at *garelick.virginia@epa.gov*. An e-mail message is not required, however. Anyone wishing to may attend provided space is available. If you need a sign language interpreter at any of these meetings, you should notify Ms. Garelick of such at least ten business days prior to the meetings so that appropriate arrangements can be made. For further information, including registration information, please refer to the following Web site: *http://www.epa.gov/npdes/pesticides*.

Webcast: EPA has scheduled a Webcast to provide information on this draft permit and to answer questions for interested parties that are unable to attend the public meetings or hearing. The webcast will be broadcast on June 17, 2010, from 1 p.m. to 3 p.m. Eastern Standard Time (EST). For information on how to register and attend the webcast, see EPA's Web site at *http://www.epa.gov/npdes/training*.

FOR FURTHER INFORMATION CONTACT: For further information on this draft NPDES general permit, contact the appropriate EPA Regional Office listed in Section I.F, or contact Jack Faulk, EPA Headquarters, Office of Water, Office of Wastewater Management at tel.: 202–564–0768 or e-mail: *faulk.jack@epa.gov*.

SUPPLEMENTARY INFORMATION: This supplementary information section is organized as follows:

Table of Contents

I. General Information
A. Does this action apply to me?
B. How can I get copies of this document and other related information?
C. What should I consider as I prepare my comments for EPA?
D. Finalizing This Permit
E. Who are the EPA regional contacts for this draft permit?
II. Statutory and Regulatory History
A. Clean Water Act
B. NPDES Permits
C. History of Pesticide Application Regulations
D. Court Decisions Leading to the CWA Regulation Concerning Pesticide Applications
E. 2006 Agency Rulemaking Excluding Discharges From Pesticide Applications From NPDES Permitting
F. Legal Challenges to the 2006 NPDES Pesticides Rule and Resulting Court Decision
III. Scope and Applicability of This NPDES Pesticides General Permit
A. Geographic Coverage
B. Categories of Facilities Covered
C. Summary of Permit Terms and Requirements
D. Key Permit Provisions for Which EPA is Soliciting Comment
E. Permit Appeal Procedures
IV. Economic Impacts of the Pesticides General Permit
V. Executive Order 12866

I. General Information

A. Does this action apply to me?

You may be affected by this action if your application of pesticides, under the use patterns in Section III.B., results in a discharge to waters of the United States in one of the geographic areas identified in Section III.A. Potentially affected entities, as categorized in the North American Industry Classification System (NAICS), may include, but are not limited to:

TABLE 1—ENTITIES POTENTIALLY REGULATED BY THIS PERMIT

Category	NAICS	Examples of potentially affected entities
Agriculture parties—General agricultural interests, farmers/producers, forestry, and irrigation.	111 Crop Production	Producers of crops mainly for food and fiber including farms, orchards, groves, greenhouses, and nurseries that have irrigation ditches requiring pest control.
	113110 Timber Tract Operations	The operation of timber tracts for the purpose of selling standing timber.
	113210 Forest Nurseries Gathering of Forest Products.	Growing trees for reforestation and/or gathering forest products, such as gums, barks, balsam needles, rhizomes, fibers, Spanish moss, ginseng, and truffles.
	221310 Water Supply for Irrigation	Operating irrigation systems.
Public health parties (includes mosquito or other vector control districts and commercial applicators that service these).	923120 Administration of Public Health Programs.	Government establishments primarily engaged in the planning, administration, and coordination of public health programs and services, including environmental health activities.
Resource management parties (includes State departments of fish and wildlife, State departments of pesticide regulation, State environmental agencies, and universities).	924110 Administration of Air and Water Resource and Solid Waste Management Programs.	Government establishments primarily engaged in the administration, regulation, and enforcement of air and water resource programs; the administration and regulation of water and air pollution control and prevention programs; the administration and regulation of flood control programs; the administration and regulation of drainage development and water resource consumption programs; and coordination of these activities at intergovernmental levels.
Public health parties (includes mosquito or other vector control districts and commercial applicators that service these).	923120 Administration of Public Health Programs.	Government establishments primarily engaged in the planning, administration, and coordination of public health programs and services, including environmental health activities.
	924120 Administration of Conservation Programs.	Government establishments primarily engaged in the administration, regulation, supervision and control of land use, including recreational areas; conservation and preservation of natural resources; erosion control; geological survey program administration; weather forecasting program administration; and the administration and protection of publicly and privately owned forest lands. Government establishments responsible for planning, management, regulation and conservation of game, fish, and wildlife populations, including wildlife management areas and field stations; and other administrative matters relating to the protection of fish, game, and wildlife are included in this industry.
Utility parties (includes utilities)	221 Utilities	Provide electric power, natural gas, steam supply, water supply, and sewage removal through a permanent infrastructure of lines, mains, and pipes.

B. How can I get copies of this document and other related information?

1. *Docket.* EPA has established an official public docket for this action under Docket ID No. EPA–HQ–OW–2010–0257. The official public docket is the collection of materials that is available for public viewing at the Water Docket in the EPA Docket Center, (EPA/DC) EPA West, Room 3334, 1301 Constitution Ave., NW., Washington, DC. Although all documents in the docket are listed in an index, some information is not publicly available, *i.e.*, CBI or other information whose disclosure is restricted by statute. EPA policy is that copyrighted material will not be placed in EPA's electronic public docket but will be available only in printed, paper form in the official public docket. Publicly available docket materials are available in hard copy at the EPA Docket Center Public Reading Room, open from 8:30 a.m. to 4:30 p.m., Monday through Friday, excluding legal holidays. The telephone number for the Public Reading Room is 202–566–1744, and the telephone number for the Water Docket is 202–566–2426.

2. *Electronic Access.* You may access this **Federal Register** document electronically through the United States government on-line source for Federal regulations at *http://www.regulations.gov*.

Electronic versions of this draft permit and fact sheet are available on EPA's NPDES Web site at *www.epa.gov/npdes/pesticides*.

An electronic version of the public docket is available through EPA's

electronic public docket and comment system, EPA Dockets. You may use EPA Dockets at *http://www.regulations.gov* to view public comments, access the index listing of the contents of the official public docket, and to access those documents in the public docket that are available electronically. For additional information about EPA's public docket, visit the EPA Docket Center homepage at *http://www.epa.gov/epahome/dockets.htm*. Although not all docket materials may be available electronically, you may still access any of the publicly available docket materials through the Docket Facility identified in Section I.A.1.

C. What should I consider as I prepare my comments for EPA?

1. Submitting CBI

Do not submit this information to EPA through regulations.gov or e-mail. Clearly mark all of the information that you claim to be CBI. For CBI information on computer discs mailed to EPA, mark the surface of the disc as CBI. Also identify electronically the specific information contained in the disc that you claim is CBI. In addition to one complete version of the specific information claimed as CBI, you must submit a copy that does not contain the information claimed as CBI for inclusion in the public document. Information so marked will not be disclosed except in accordance with procedures set forth in 40 CFR part 2.

For public commenters, it is important to note that EPA's policy is that public comments, whether submitted electronically or in paper, will be made available for public viewing in EPA's electronic public docket as EPA receives them and without change, unless the comment contains copyrighted material, CBI, or other information whose disclosure is restricted by statute. When EPA identifies a comment containing copyrighted material, EPA will provide a reference to that material in the version of the comment that is placed in EPA's electronic public docket. The entire printed comment, including the copyrighted material, will be available in the public docket.

Public comments submitted on computer disks that are mailed or delivered to the docket will be transferred to EPA's electronic public docket. Public comments in paper form that are mailed or delivered to the Docket will be scanned and placed in EPA's electronic public docket. Where practical, physical objects will be photographed, and the photograph will be placed in EPA's electronic public docket along with a brief description written by the docket staff.

2. Tips for Preparing Your Comments

When submitting comments, remember to:

- Identify this permit by docket number and other identifying information (subject heading, **Federal Register** date, and page number).
- Follow directions—The agency may ask you to respond to specific questions or organize comments by referencing a section or part of this permit.
- Explain why you agree or disagree, suggest alternatives, and suggest substitute language for your requested changes.
- Describe any assumptions and provide any technical information and/or data that you used.
- If you estimate potential costs or burdens, explain how you arrived at your estimate in sufficient detail to allow for it to be reproduced.
- Provide specific examples to illustrate your concerns, and suggest alternatives.
- Explain your views as clearly as possible.
- Make sure to submit your comments by the comment period deadline identified.

D. Finalizing This Permit

After the close of the public comment period on this draft, EPA will issue a final permit. That final permit will be issued after all public comments received during the public comment period have been considered and appropriate changes made to this permit. EPA's response to comments received will be included in the docket as part of the final permit decision.

E. Who are the EPA regional contacts for this draft permit?

For EPA Region 1, contact George Papadopoulos at USEPA Region 1, 5 Post Office Square—Suite 100, Boston, MA 02109–3912; or at tel.: (617) 918–1579; or e-mail at *papadopoulos.george@epa.gov*.

For EPA Region 2, contact Maureen Krudner at USEPA Region 2, 290 Broadway, New York, NY 10007–1866; or tel.: (212) 637–3874; or e-mail at *krudner.maureen@epa.gov*.

For EPA Region 3, contact Peter Weber at USEPA Region 3, 1650 Arch Street, Mail Code: 3WP41, Philadelphia, PA 19103–2029; or at tel.: (215) 814–5749; or e-mail at *weber.peter@epa.gov*.

For EPA Region 4, contact Sam Sampath at USEPA Region 4, 61 Forsyth Street, SW., Atlanta, CA 30303–8960; or at tel.: (404) 562–9229; or e-mail at *sampath.sam@epa.gov*.

For EPA Region 5, contact Morris Beaton at USEPA Region 5, 77 West Jackson Boulevard, Mail Code: WN16J, Chicago, IL 60604–3507; or at tel.: (312) 353–0850; or e-mail at *beaton.morris@epa.gov*.

For EPA Region 6, contact Phillip Jennings at USEPA Region 6, 1445 Ross Avenue, Suite 1200, Mail Code: 6WO, Dallas, TX 75202–2733; or at tel.: (214) 665–7538 or e-mail at *jennings.phillip@epa.gov*.

For EPA Region 7, contact Kimberly Hill at USEPA Region 7, 901 North Fifth Street, Mail Code: XX, Kansas City, KS 66101; or at tel.: (913) 551–7841 or e-mail at: *hill.kimberly@epa.gov*.

For EPA Region 8, contact David Rise at USEPA Region 8, Montana Operations Office, Federal Building, 10 West 15th Street, Suite 3200, Mail Code: 8MO, Helena, MT 59626; or at tel.: 406–457–5012 or e-mail at: *rise.david@epa.gov*.

For EPA Region 9, contact Pascal Mues, USEPA Region 9, 75 Hawthorne Street, Mail Code: WTR–5, San Francisco, CA 94105; or at tel.: (415) 972–3768 or e-mail at: *mues.pascal@epa.gov*.

For EPA Region 10, contact Dirk Helder, USEPA Region 10 Idaho Operations Office, 1435 North Orchard Street, Boise, ID 83706 or at tel.: 208–378–5749 or e-mail at: *helder.dirk@epa.gov*.

II. Statutory and Regulatory History

A. Clean Water Act

Section 301(a) of the Clean Water Act (CWA) provides that "the discharge of any pollutant by any person shall be unlawful" unless the discharge is in compliance with certain other sections of the Act. 33 U.S.C. 1311(a). The CWA defines "discharge of a pollutant" as "(A) any addition of any pollutant to navigable waters from any point source, (B) any addition of any pollutant to the waters of the contiguous zone or the ocean from any point source other than a vessel or other floating craft." 33 U.S.C. 1362(12). A "point source" is any "discernible, confined and discrete conveyance" but does not include "agricultural stormwater discharges and return flows from irrigated agriculture." 33 U.S.C. 1362(14).

The term "pollutant" includes, among other things, "garbage * * * chemical wastes, biological materials * * * and industrial, municipal, and agricultural waste discharged into water." 33 U.S.C. 1362(6).

A person may discharge a pollutant without violating the section 301 prohibition by obtaining authorization to discharge (referred to herein as

"coverage") under a section 402 National Pollutant Discharge Elimination System (NPDES) permit (33 U.S.C. 1342). Under section 402(a), EPA may "issue a permit for the discharge of any pollutant, or combination of pollutants, notwithstanding section 1311(a)" upon certain conditions required by the Act.

B. NPDES Permits

An NPDES permit authorizes the discharge of a specified amount of a pollutant or pollutants into a receiving water under certain conditions. The NPDES program relies on two types of permits: individual and general. An individual permit is a permit specifically tailored for an individual discharger. Upon receiving the appropriate permit application(s), the permitting authority, *i.e.*, EPA or a state or territory, develops a draft permit for public comment for that particular discharger based on the information contained in the permit application (*e.g.*, type of activity, nature of discharge, receiving water quality). Following consideration of public comments, a final permit is then issued to the discharger for a specific time period (not to exceed 5 years) with a provision for reapplying for further permit coverage prior to the expiration date.

A general permit covers multiple facilities/sites/activities within a specific category for a specific period of time (not to exceed 5 years). For general permits, EPA or a state or territory develops and issues the permit with dischargers then obtaining coverage under the permit, typically through submission of a Notice of Intent (NOI). A general permit is also subject to public comment, as is being done under this **Federal Register** notice, and is developed and issued by a permitting authority (in this case, EPA).

Under 40 CFR 122.28, general permits may be written to cover categories of point sources having common elements, such as facilities that involve the same or substantially similar types of operations, that discharge the same types of wastes, or that are more appropriately regulated by a general permit. Given the vast number of pesticide applicators requiring NPDES permit coverage and the discharges common to these applicators, EPA believes that it makes administrative sense to issue this general permit, rather than issuing individual permits to each applicator. Entities still have the ability to seek individual permit coverage. Courts have approved of the use of general permits. *See e.g., Natural Res. Def. Council* v. *Costle,* 568 F.2d 1369 (DC Cir. 1977); *EDC* v. *U.S. EPA,* 344 F.3d 832, 853 (Ninth Cir. 2003). The general permit approach allows EPA to allocate resources in a more efficient manner and to provide more timely coverage. As with any permit, the CWA requires the general permit to contain technology-based effluent limitations, as well as any more stringent limits when necessary to meet applicable state water quality standards.

C. History of Pesticide Application Regulation Under FIFRA

EPA regulates the sale, distribution and use of pesticides in the United States under the statutory framework of FIFRA to ensure that, when used in conformance with FIFRA labeling directions, pesticides will not pose unreasonable risks to human health and the environment. All new pesticides must undergo a rigorous registration procedure under FIFRA during which EPA assesses a variety of potential human health and environmental effects associated with use of the product. Under FIFRA, EPA is required to consider the effects of pesticides on the environment by determining, among other things, whether a pesticide "will perform its intended function without unreasonable adverse effects on the environment," and whether "when used in accordance with widespread and commonly recognized practice [the pesticide] will not generally cause unreasonable adverse effects on the environment." 7 U.S.C. 136a(c)(5). In performing this analysis, EPA examines, among other things, the ingredients of a pesticide, the intended type of application site and directions for use, and supporting scientific studies for human health and environmental effects and exposures. The applicant for registration of the pesticide must submit data as required by EPA regulations.

When EPA approves a pesticide for a particular use, the Agency imposes labeling restrictions governing such use. Compliance with the labeling requirements ensures that the pesticide serves an intended purpose and avoids unreasonable adverse effects. It is illegal under Section 12(a)(2)(G) of FIFRA to use a registered pesticide in a manner inconsistent with its labeling. States have primary authority under FIFRA to enforce "use" violations, but both the States and EPA have ample authority to prosecute pesticide misuse when it occurs.

D. Court Decisions Leading to the CWA Regulation Concerning Pesticide Applications

Over the past ten years, several courts addressed the question of whether the CWA requires NPDES permits for pesticide applications. These cases resulted in some confusion among the regulated community and other affected citizens about the applicability of the CWA to pesticides applied to waters of the United States. In 2001, the U.S. Court of Appeals for the Ninth Circuit held in *Headwaters, Inc.* v. *Talent Irrigation District (Talent)* that an applicator of herbicides was required to obtain an NPDES permit under the circumstances before the court. 243 F.3rd 526 (Ninth Cir. 2001).

In 2002, the Ninth Circuit in *League of Wilderness Defenders et al.* v. *Forsgren (Forsgren)* held that the application of pesticides to control Douglas Fir Tussock Moths in National Forest lands required an NPDES permit. 309 F.3d 1181 (Ninth Cir. 2002). The court in *Forsgren* did not analyze the question of whether the pesticides applied were pollutants, because it incorrectly assumed that the parties agreed that they were (in fact, the United States expressly reserved its arguments on that issue in its brief to the District Court. Id. at 1184, n.2). The court instead analyzed the question of whether the aerial application of the pesticide constituted a point source discharge, and concluded that it did. Id. at 1185.

Since *Talent* and *Forsgren*, California, Nevada, Oregon, and Washington, all of which are within the Ninth Circuit, have issued permits for the application of certain types of pesticides (*e.g.*, products to control aquatic weeds and algae and products to control mosquito larvae). Other States have continued their longstanding practice of not issuing permits to people who apply pesticides to waters of the United States. These varying practices reflected the substantial uncertainty among regulators, the regulated community, and the public regarding how the CWA applies to pesticides that have been properly applied and used for their intended purpose.

Additionally, the Second Circuit Court of Appeals addressed the applicability of the CWA's NPDES permit requirements to pesticide applications. In *Altman* v. *Town of Amherst* (*Altman*), the court vacated and remanded for further development of the record a District Court decision holding that the Town of Amherst was not required to obtain an NPDES permit to spray mosquitocides over waters of the United States. 47 Fed. Appx. 62, 67 (Second Cir. 2002). The United States filed an amicus brief setting forth the Agency's views in the context of that particular case. In its opinion, the Second Circuit stated that "[u]ntil the EPA articulates a clear interpretation of

current law—among other things, whether properly used pesticides released into or over waters of the United States can trigger the requirement for NPDES permits * * * —the question of whether properly used pesticides can become pollutants that violate the CWA will remain open." Id. at 67.

In 2005, the Ninth Circuit again addressed the CWA's applicability to pesticide applications. In *Fairhurst* v. *Hagener*, the court held that pesticides applied directly to a lake to eliminate non-native fish species, where there are no residues or unintended effects, are not "pollutants" under the CWA because they are not chemical wastes. 422 F.3d 1146 (Ninth Cir. 2005).

Recently, the Second Circuit reaffirmed the recent Sixth Circuit decision in ruling that trucks and helicopters that sprayed pesticides should be considered point sources under the CWA. *Peconic Baykeeper Inc.* v. *Suffolk County,* 2nd Cir., No. 09–97–cv, 3/30/10.

E. 2006 Agency Rulemaking Excluding Discharges From Pesticides From NPDES Permitting

On November 27, 2006 (71 FR 68483), EPA issued a final rule (hereinafter called the "2006 NPDES Pesticides Rule") clarifying two specific circumstances in which an NPDES permit is not required to apply pesticides to or over, including near water provided that the application is consistent with relevant Federal Insecticide, Fungicide and Rodenticide Act (FIFRA) requirements. They are: (1) The application of pesticides directly to water to control pests; and (2) the application of pesticides to control pests that are present over, including near, water where a portion of the pesticides will unavoidably be deposited to the water to target the pests.

F. Legal Challenges to the 2006 NPDES Pesticides Rule and Resulting Court Decision

On January 19, 2007, EPA received petitions for review of the 2006 NPDES Pesticides Rule from both environmental and industry groups. Petitions were filed in eleven circuit courts with the case, *National Cotton Council, et al,* v. *EPA,* assigned to the Sixth Circuit Court of Appeals (Sixth Circuit). On January 9, 2009, the Sixth Circuit vacated EPA's 2006 NPDES Pesticides Rule under a plain language reading of the CWA. *National Cotton Council of America* v. *EPA,* 553 F.3d 927 (Sixth Cir. 2009). The Court held that the CWA unambiguously includes "biological pesticides," and "chemical pesticides" that leave a residue within its definition of "pollutant." Specifically, the application of chemical pesticides that leaves no residue is not a pollutant. The Court also found that the application of pesticides is from a point source.

Based on the Court's decision, chemical pesticides that leave no residue do not require an NPDES permit. However, EPA assumes for purpose of this permit that all chemical pesticides have a residue, and, therefore would need a permit unless it can be shown that there is no residual. Unlike chemical pesticides (where the residual is the pollutant), the Court further found that biological pesticides are pollutants regardless of whether the application results in residuals and such discharges need an NPDES permit.

In response to this decision, on April 9, 2009, EPA requested a two-year stay of the mandate to provide the Agency time to develop general permits, to assist NPDES-authorized states to develop their NPDES permits, and to provide outreach and education to the regulated community and other stakeholders. On June 8, 2009, the Sixth Circuit granted EPA the two-year stay of the mandate until April 9, 2011. On November 2, 2009, Industry Petitioners of the Sixth Circuit Case petitioned the Supreme Court to review the Sixth Circuit's decision. On February 22, 2010, the Supreme Court issued its decision denying petitions to review the Sixth Circuit decision.

As a result of the Court's decision on the 2006 NPDES Pesticides Rule, at the end of the two-year stay, NPDES permits will be required for point source discharges to waters of the U.S. of biological pesticides, and of chemical pesticides that leave a residue. Until April 9, 2011, the rule remains in effect and NPDES permits are not required.

In response to the Court's decision, EPA is proposing this draft general permit for four specific pesticide use patterns. The specified use patterns may not represent every pesticide application activity for which a discharge requires NPDES permit coverage. The four use patterns included in this draft permit are generally consistent with what was addressed in the 2006 NPDES Pesticides Rule.

Neither the Court's ruling nor EPA's issuance of this general permit affects the existing CWA exemptions for irrigation return flow and agricultural stormwater runoff, which are excluded from the definition of a point source under Section 502(14) of the CWA and do not require NPDES permit coverage.

III. Scope and Applicability of This NPDES Pesticides General Permit

A. Geographic Coverage

EPA will provide permit coverage for classes of discharges where EPA is the NPDES permitting authority. The geographic coverage of today's draft permit is listed below. Where this permit covers activities on Indian Country lands, those areas are as listed below within the borders of that state:

EPA Region 1

- The Commonwealth of Massachusetts, including Indian Country lands
- Indian Country lands within the State of Connecticut
- The State of New Hampshire
- Indian Country lands within the State of Rhode Island
- Federal Facilities in the State of Vermont

EPA Region 2

- Indian Country lands within the State of New York
- The Commonwealth of Puerto Rico

EPA Region 3

- The District of Columbia
- Federal Facilities in the State of Delaware

EPA Region 4

- Indian Country lands within the State of Alabama
- Indian Country lands within the State of Florida
- Indian Country lands within the State of Mississippi
- Indian Country lands within the State of North Carolina

EPA Region 5

- Indian Country lands within the State of Michigan
- Indian Country lands within the State of Minnesota
- Indian Country lands within the State of Wisconsin

EPA Region 6

- Indian Country lands within the State of Louisiana
- The State of New Mexico, including Indian Country lands within the State of New Mexico, except Navajo Reservation Lands (*see* Region 9) and Ute Mountain Reservation Lands (*see* Region 8)
- The State of Oklahoma, including Indian Country lands
- Discharges in the State of Texas that are not under the authority of the Texas Commission on Environmental Quality (formerly TNRCC), including activities associated with the exploration, development, or production of oil or gas

or geothermal resources, including transportation of crude oil or natural gas by pipeline

- Indian Country lands within the State of Texas

EPA Region 7

- Indian Country lands within the State of Iowa
- Indian Country lands within the State of Kansas
- Indian Country lands the State of Nebraska, except Pine Ridge Reservation lands (*see* Region 8)

EPA Region 8

- Federal Facilities in the State of Colorado, except those located on Indian Country lands
- Indian Country lands within the State of Colorado, as well as the portion of the Ute Mountain Reservation located in New Mexico
- Indian Country lands within the State of Montana
- Indian Country lands within the State of North Dakota
- Indian Country lands within the State of South Dakota, as well as the portion of the Pine Ridge Reservation located in Nebraska (*see* Region 7)
- Indian Country lands within the State of Utah, except Goshute and Navajo Reservation lands (*see* Region 9)
- Indian Country lands within the State of Wyoming

EPA Region 9

- The Island of American Samoa
- Indian Country lands within the State of Arizona as well as Navajo Reservation lands in New Mexico (*see* Region 6) and Utah (*see* Region 8)
- Indian Country lands within the State of California
- The Island of Guam
- The Johnston Atoll
- The Midway Island and Wake Island
- The Commonwealth of the Northern Mariana Islands
- Indian Country lands within the State of Nevada, as well as the Duck Valley Reservation in Idaho, the Fort McDermitt Reservation in Oregon (*see* Region 10) and the Goshute Reservation in Utah (*see* Region 8)

EPA Region 10

- The State of Alaska, including Indian Country lands
- The State of Idaho, including Indian Country lands within the State of Idaho, except Duck Valley Reservation lands (*see* Region 9)
- Indian Country lands within the State of Oregon, except Fort McDermitt Reservation lands (*see* Region 9)
- Federal Facilities in the State of Washington, including those located on Indian Country lands within the State of Washington

B. Categories of Facilities Covered

Today's draft general permit regulates discharges to waters of the United States from the application of (1) biological pesticides, and (2) chemical pesticides that leave a residue for the following pesticide use patterns:

- Mosquito and Other Flying Insect Pest Control—to control public health/nuisance and other flying insect pests that develop or are present during a portion of their life cycle in or above standing or flowing water. Public health/nuisance pests in this use category include but are not limited to mosquitoes and black flies.
- Aquatic Weed and Algae Control—to control weeds and algae in water and at water's edge.
- Aquatic Nuisance Animal Control—to control invasive or other nuisance species in water and at water's edge. Aquatic nuisance animals in this use category include, but are not limited to fish, lampreys, and mollusks.
- Forest Canopy Pest Control—aerial application of a pesticide over a forest canopy to control the population of a pest species (*e.g.*, insect or pathogen) where to target the pest effectively a portion of the pesticide unavoidably will be applied over and deposited to water.

The scope of activities encompassed by these pesticide use patterns is described in greater detail in Part 2.2 of this draft general permit.

C. Summary of Permit Terms and Requirements

Coverage Under This Permit

This permit will be available to operators of discharges to waters of the U.S. from the application of (1) biological pesticides, and (2) chemical pesticides that leave a residue for the following pesticide use patterns: mosquito and other flying insect pest control; aquatic weed and algae control; aquatic nuisance animal control; and forest canopy pest control. Not eligible for coverage under this permit are discharges to waters of the U.S. identified as impaired for the specific pesticide or its degradates being applied and any discharges to outstanding national resource waters (*i.e.*, Tier 3 waters under anti-degradation regulations). To obtain authorization under this permit an operator must meet the eligibility requirements identified above and if the operator knows or reasonably should have known that its activities will exceed any annual treatment area threshold described in Part 1.2.2 of the permit, then an NOI must be submitted for permit coverage.

Threatened and Endangered Species and Critical Habitat

Section 7(a)(2) of the Endangered Species Act (ESA) requires that EPA consult with the U.S. Fish and Wildlife Service and U.S. National Marine Fisheries Service (collectively called the "Services") to ensure that the permit is not likely to jeopardize the continued existence of any threatened or endangered species or adversely affect its critical habitat. Consultation between EPA and the Services is currently ongoing with the results of that action to be included in the final permit. As a result of these consultations, EPA may need to consider adding conditions to the permit to further protect listed species and critical habitat. These requirements may include additional effluent limitations, monitoring, planning, recordkeeping, and/or reporting. A more detailed discussion of the permit conditions that may be considered is provided in Part III.10.F. of the permit fact sheet. Based on consultation to date, EPA included language in the draft general permit that would require:

—Any operator that is required to submit an NOI to indicate in that NOI whether threatened and endangered species and/or its critical habitat are present in the area where permit coverage is being requested;
—Where a pre-existing ESA Section 7 or Section 10 action already addresses discharges from activities also covered under this permit, that the conditions and/or requirements of those actions are incorporated as enforceable conditions of this general permit; and
—All operators to notify the Services if they become aware of any adverse incident to a Federally-listed threatened or endangered species or its critical habitat, that may have resulted from a discharge from their pesticide application.

EPA requests comment on appropriate measures to protect endangered and threatened species, including the possible measures discussed in Part III.10.F of the draft Permit Fact Sheet.

Technology-Based Effluent Limitations

The draft permit, in Part 2, requires all operators to minimize pesticide discharges into waters by doing the following: (1) Use the lowest effective amount of pesticide product per application and optimum frequency of pesticide applications necessary to control the target pest; (2) perform

regular maintenance activities to reduce leaks, spills, or unintended discharges of pesticides associated with the application of pesticides covered under this permit; and (3) maintain application equipment in proper operating condition by calibrating and cleaning/repairing such equipment on a regular basis to ensure effective pesticide application and pest control. Operators that exceed an annual treatment area threshold must also implement Integrated Pest Management (IPM) practices that require these operators to: (1) Identify and assess the pest problem; (2) evaluate effective pest management; and (3) follow appropriate procedures for pesticide use.

It is important to note that although the FIFRA labeling is not an effluent limitation, if the permittee is found to have applied a pesticide in a manner inconsistent with the relevant water-quality related FIFRA labeling requirements, EPA will presume that the effluent limitation to minimize pesticides entering the Waters of the United States has been violated under the NPDES permit. Therefore, use inconsistent with certain FIFRA labeling requirements could result in the permittee being held liable for CWA violation as well as a FIFRA violation.

Water Quality-Based Effluent Limitations

In addition to the technology-based effluent limitations, the operator is required to control its discharge as necessary to meet applicable water quality standards. In general, EPA expects that compliance with the technology-based effluent limitations and other terms and conditions in this permit will meet the water-quality effluent limitation. Part 3 contains permit conditions to prohibit any discharges that causes or contributes to an excursion of any applicable numeric or narrative EPA-approved State, territory, or tribal or EPA promulgated water quality standard.

Site Monitoring

Part 4 requires entities to monitor to assess compliance with this permit. Permittees must monitor for observable adverse incidents in the treatment area and where pesticides are discharged to waters of the United States. Specifically operators are required to visually monitor for adverse impacts (as defined in the permit) during application, or during post application surveillance that is conducted as a regular part of doing business.

Pesticide Discharge Management Plan

An operator who is subject to Part 2.2 of this permit (*i.e.*, one who is required to submit an NOI) must prepare a pesticide discharge management plan (PDMP) for its pest management area. Operators who know or should have reasonably known prior to commencement of discharge, that they will exceed an annual treatment area threshold identified in Part 1.2.2 for that year, must develop a PDMP prior to first pesticide application covered under this permit. Operators who do not know or would reasonably not know until after commencement of discharge, that they will exceed an annual treatment area threshold identified in Part 1.2.2 for that year, must develop a PDMP prior to exceeding the annual treatment area threshold. Operators commencing discharge in response to a *declared pest emergency situation* as defined in Appendix A, that will cause the operator to exceed an annual treatment area threshold, must develop a PDMP no later than 90 days after responding to the declared pest emergency. The PDMP must include information on the pesticide discharge management team, pest management area, control measure, including evaluation and selection of pest management, and schedules and procedures for pest surveillance, equipment maintenance, application rate and frequency, assessing environmental conditions, spill prevention, spill response, adverse incident response, and pesticide monitoring. The PDMP, together with the additional documentation requirements in Part 7, document the practices the operator is implementing to meet the effluent limitations in this permit.

Corrective Action

Part 6 outlines situations that require operators to review and revise their control measures. Changes to control measures must be made before the next pesticide application that results in a discharge or, if not possible, as soon as practicable. This draft permit also outlines the procedures for notification, reporting, and documentation of corrective actions for adverse incidents, spills and leaks and other situations triggering the need for such actions.

Recordkeeping and Annual Reporting

In Part 7, operators required to submit an NOI are required to keep certain records of their pesticide discharges to demonstrate compliance with the permit conditions. This draft permit specifies which records must be kept and the timeframe for record retention. In addition, any operator who is required to submit an NOI must submit an annual report to EPA. The draft permit specifies the information that must be included in the annual report and the timeframe for submission.

D. Key Permit Provisions for Which EPA Is Soliciting Comment

EPA seeks comment on all aspects of this draft general permit and the accompanying fact sheet; however, in particular, EPA is soliciting comments on the following aspects of this permit:

Number of Entities Covered Under This Permit

This general permit provides coverage for the following four use patterns: mosquito and other flying insect pest control; aquatic weed and algae control; aquatic nuisance animal control; and forest canopy pest control. To gain a better understanding of the universe of permittees that would be covered under this permit, EPA is soliciting information on the numbers, types and sizes of entities that conduct pesticide application for each use pattern. Entities include those who decide that application of pesticides is necessary (for example, mosquito control districts, counties, irrigation control districts and other local governments) as well as those entities that apply the pesticides (for example, for-hire commercial applicators).

Activities Covered

This general permit provides coverage for the following four use patterns: mosquito and other flying insect pest control; aquatic weed and algae control; aquatic nuisance animal control; and forest canopy pest control.

EPA believes that these four use patterns would encompass the majority of pesticide applications that would result in point source discharges to waters of the U.S. This draft permit would not provide coverage for other pesticide use patterns; however, EPA is still exploring whether other use patterns should be included. Specifically, EPA has not included most use patterns that target land-based pests and flying pests that are not near or over water. EPA is seeking comment on whether certain pesticide application activities targeting such pests may involve unavoidable point-source discharges to waters of the United States. EPA is also requesting comment on whether this general permit should provide coverage for any such activities, and if so, which activities should be covered. If, after considering comments, EPA expands coverage of this permit, the effluent limitations for the

additional use patterns would likely be similar to what is being proposed in this draft permit. Due to the likely similarities between such additional activities and the associated effluent limitations, EPA expects that there will not be a need to re-propose the general permit to cover such additional activities in the final permit. In this case, entities in the newly included use pattern(s) could seek coverage under this general permit. Any point source discharges of pollutants to waters of the United States not covered by this or another general permit will need coverage under an individual permit. EPA also requests comments on how the effluent limitations provided in this permit could apply to the additional activities and whether there are additional or different effluent limitations that might be appropriate for such activities. EPA is also soliciting comments on whether it should exclude from coverage under the general permit all discharges to waters that are impaired generally for "pesticides" rather than only excluding from coverage those discharges to waters that are impaired for the specific pesticide being applied or its degradates.

Limitations on Coverage

This permit does not authorize coverage for certain discharges to pesticide-impaired waters and Tier 3 waters. Specifically, this permit does not authorize discharges of pesticides or their degradates to waters impaired for those specific pesticides or degradates. Additionally, this permit does not authorize discharges to outstanding national resource waters (Tier 3 waters). EPA would like input on whether it is appropriate to exclude these discharges from coverage under the general permit or if there are conditions that could be added to the general permit that could adequately address these situations.

Sharing of Responsibilities

This permit establishes requirements to control discharges from the application of pesticides that are specific to the discharge regardless of who is defined as the "operator" of the discharge. An "operator" is defined as that entity required under the NPDES program to obtain permit coverage for point source discharges of pollutants to waters of the United States. As written, this permit acknowledges that in many instances, the entity making the decision to apply pesticides is different than the entity that actually applies the pesticides (for example, a mosquito control district may decide that a pesticide application is needed and enter into a contract with a for-hire commercial applicator to perform the application). EPA, however, defines both of these entities as "operators." EPA drafted this permit with the intent of clarifying which entity is expected to implement which permit conditions with the goal of minimizing duplication of effort while still providing flexibility for multiple operators to decide how compliance with permit conditions will be achieved. Generally, the entity making the decision to apply pesticides is responsible for complying with provisions of the permit leading up to the actual application of the pesticide (such as IPM identifying and assessing the pest problem) and any activities after application of the pesticide. The applicator of the pesticide, if different, is responsible for those permit requirements that occur during or directly related to the actual application of the pesticide (such as maintaining and calibrating equipment). EPA is interested in whether the approach in this draft general permit is clear and if it provides a logical approach to the expected sharing of responsibilities.

Notices of Intent

In general, as set forth in 40 CFR 122.28(b)(2), dischargers seeking coverage under a general permit must submit a notice of intent (NOI) to be covered by the permit. However, 40 CFR 122.28(b)(2)(v) provides EPA the authority to cover entities under a general permit without requiring the submission of an NOI. In Part 1.2.2 of this permit, EPA proposes annual treatment area thresholds for the submission of NOIs. EPA is proposing this NOI framework to: (1) Obtain NOIs from the largest dischargers, (2) eliminate duplicative reporting by multiple operators for an individual discharge, and (3) clarify the type of entity responsible for submitting the NOI. Operators that do not exceed an annual treatment area threshold are covered automatically under this permit without the need to submit an NOI. EPA is interested in feedback on whether this NOI framework strikes an appropriate balance between capturing information on discharges from the largest pesticide application activities and avoiding the imposition of unreasonable burdens on operators whose pesticide application activities affect smaller areas. EPA is also interested in information on whether the size of the thresholds is appropriate, and whether they result in obtaining NOIs from an appropriately targeted set of large dischargers.

If an NOI is required, it must contain either a map or narrative description of the area and the waters of the United States and the pesticide use patterns for which permit coverage is being requested for the duration of the permit. Operators can identify specific waters or request coverage for all waters within the area for which they are requesting permit coverage. EPA is interested in feedback on whether this approach adequately captures the areas and associated waters of the United States for which permit coverage is being requested.

Technology-Based Effluent Limitations

This draft permit contains narrative technology-based effluent limitations for the class and scope of activities and operators covered under this permit. After much research and discussion with experts, EPA determined that the effluent limitations identified in Part 2 of the permit, including IPM practices for operators that will exceed an annual treatment area threshold (*i.e.*, those who must submit an NOI) should be included in this general permit. Since this is the first general permit for these types of discharges, EPA specifically requests comments on this section for the following questions:

1. What types of government agencies/departments have the responsibility or are mandated to perform pest control? Are they already required to implement IPM? What specific IPM practices do they already perform?

2. Are there private commercial entities that apply pesticides below the threshold that should be expected to implement IPM? If so, who are these and what IPM practices should they be required to implement? Are any private commercial entities that apply pesticides below the threshold currently implementing IPM practices? Is the use of annual treatment area thresholds an appropriate mechanism for establishing technology-based effluent limitations and if so, are the thresholds provided in the draft general permit appropriate?

3. Are there more specific IPM procedures that we can incorporate into this permit to better define IPM expectations of permittees above or below the threshold? Would an EPA-developed IPM template be practical and help? If so, what should be included? Are there industry-specific templates already available?

4. Will requiring IPM of small public or private entities not already required to implement IPM under this draft general permit force them to go out of business or choose not to spray at the expense of public health or the environment?

5. How much do the IPM procedures required in this permit cost?

6. Are entities above the thresholds already doing these practices? If not, what would be the consequences/costs of these requirements?

Water Quality Based Effluent Limitations

EPA is soliciting comment on the water quality based effluent limitations in this proposed permit, and whether other parameters or narrative requirements would be appropriate.

Monitoring

EPA is requesting comment on the value, feasibility and safety of visual monitoring during application and of post application surveillance monitoring.

EPA is considering having the largest of the large applicators provide ambient sampling data. How large would be appropriate for such a requirement? Should these data be used to enhance the cycle of information EPA will use in assessing the selected BMPs rather than compliance? What types of monitoring requirements are appropriate for each of the four pesticide use categories covered under this permit? What would be the cost of monitoring? What are the best monitoring methodologies when sampling for the residues of chemical pesticides? What sampling approaches accommodate issues of safety and accessibility? What timing and frequencies are best in these situations?

Annual Reports

Any operator required to submit an NOI is also required to submit an annual report that contains, among other things, a compilation of pesticides applied, quantities applied, locations where pesticide applications were made during the previous calendar year, and information on any adverse incidents or corrective actions resulting from discharges covered under this permit. The Agency is interested in comment on the scope of operators required to submit annual reports and the type, level of detail, and practical utility of the information being requested.

E. Permit Appeal Procedures

Within 120 days following notice of EPA's final decision for the general permit under 40 CFR 124.15, any interested person may appeal the permit in the Federal Court of Appeals in accordance with Section 509(b)(1) of the CWA. Persons affected by a general permit may not challenge the conditions of a general permit as a right in further Agency proceedings. They may instead either challenge the general permit in court, or apply for an individual permit as specified at 40 CFR 122.21 (and authorized at 40 CFR 122.28), and then petition the Environmental Appeals Board to review any conditions of the individual permit (40 CFR 124.19 as modified on May 15, 2000, *65 FR 30886*). See also 40 CFR 23.12 for filing notice of judicial review requirements.

IV. Economic Impacts of the Pesticides General Permit

As a result of the Sixth Circuit Court decision on EPA's 2006 NPDES Pesticides Rule, operators of discharges to waters of the U.S. from the application of pesticides now require NPDES permits for those discharges. EPA expects that costs associated with complying with the effluent limits under this general permit will be similar to costs under individual permits for similar activities; however, administrative costs for both EPA as the permitting authority and operators as permittees are expected to be lower under this general permit than under individual permits. In other words, the general permit itself can be expected to reduce rather than increase costs for permittees as compared to the baseline of individual permitting.

EPA expects the economic impact on covered entities, including small businesses, to be minimal. Since EPA is developing a general permit in the absence of existing national Effluent Limitations Guidelines or Best Professional Judgment (BPJ) effluent limitations in other NPDES-issued permits, the Agency performed an economic impact analysis of the Pesticides General Permit for the purpose of examining the economic achievability of complying with the technology-based effluent limitations embodied in the permit. The economic impact analysis is included in the administrative record for this permit. Based on that analysis, EPA expects that there will be minimal burden on entities, including small businesses, covered under the general permit. EPA is asking for additional information during the public notice of the draft permit and will update the analysis as appropriate for the final permit.

V. Executive Order 12866

Under Executive Order 12866 (*58 FR 51735* (October 4, 1993)) the Agency must determine whether the regulatory action is "significant" and therefore subject to OMB review and the requirements of the Executive Order. The Order defines "significant regulatory action" as one that is likely to result in a rule that may: (1) Have an annual effect on the economy of $100 million or more or adversely affect in a material way the economy, a sector of the economy, productivity, competition, jobs, the environment, public health or safety, or State, local, or Tribal governments or communities; (2) create a serious inconsistency or otherwise interfere with an action taken or planned by another agency; (3) materially alter the budgetary impact of entitlements, grants, user fees, or loan programs or the rights and obligations of recipients thereof; or (4) raise novel legal or policy issues arising out of legal mandates, the President's priorities, or the principles set forth in the Executive Order. It has been determined that this is a significant regulatory action under the terms of EO 12866 and it was therefore submitted to OMB for review. A summary of substantive changes made during OMB review, including an identification of those made at the suggestion of OIRA, is included in the docket.

Authority: Clean Water Act, 33 U.S.C. 1251 *et seq.*

Dated: May 26, 2010.

Ira W. Leighton,

Deputy Regional Administrator, EPA, Region 1.

Dated: May 26, 2010.

Kevin Bricke,

Acting Director, Division of Environmental Planning and Protection, EPA Region 2.

Dated: May 27, 2010.

Carl-Axel P. Soderberg,

Division Director, Caribbean Environmental Protection Division, EPA Region 2.

Dated: May 26, 2010.

Jon M. Capacasa,

Director, Water Protection Division, EPA Region 3.

Dated: May 26, 2010.

James D. Giattina,

Director, Water Protection Division, EPA, Region 4.

Dated: May 26, 2010.

Tinka G. Hyde,

Director, Water Division, EPA Region 5.

Dated: May 26, 2010.

William K. Honker,

Deputy Director, Water Quality Protection Division, EPA Region 6.

Dated: May 26, 2010.

Glenn Curtis,

Chief, Wastewater and Infrastructure Management Branch, EPA Region 7.

Dated: May 27, 2010.

Stephen S. Tuber,

Assistant Regional Administrator, Office of Partnerships and Regulatory Assistance, EPA Region 8.

Dated: May 26, 2010.

Alexis Strauss,

Director, Water Division, EPA Region 9.

Dated: May 26, 2010.

Michael A. Bussell,

Director, Office of Water and Watersheds, EPA Region 10.

[FR Doc. 2010–13468 Filed 6–3–10; 8:45 am]

BILLING CODE 6560–50–P

ENVIRONMENTAL PROTECTION AGENCY

[ER–FRL–8990–7]

Environmental Impacts Statements; Notice of Availability

Responsible Agency: Office of Federal Activities, General Information (202) 564–1399 or *http://www.epa.gov/compliance/nepa/.*

Weekly receipt of Environmental Impact Statements.

Filed 05/24/2010 through 05/28/2010.

Pursuant to 40 CFR 1506.9.

Notice

In accordance with Section 309(a) of the Clean Air Act, EPA is required to make its comments on EISs issued by other Federal agencies public. Historically, EPA has met this mandate by publishing weekly notices of availability of EPA comments, which includes a brief summary of EPA's comment letters, in the **Federal Register**. Since February 2008, EPA has been including its comment letters on EISs on its Web site at: *http://www.epa.gov/compliance/nepa/eisdata.html.* Including the entire EIS comment letters on the Web site satisfies the Section 309(a) requirement to make EPA's comments on EISs available to the public. Accordingly, on March 31, 2010, EPA discontinued the publication of the notice of availability of EPA comments in the **Federal Register**.

EIS No. 20100201, Draft EIS, FHWA, 00, Southeast High Speed Rail Richmond-Raleigh Project, Addresses the 162 mile Segment between Richmond, VA to Raleigh, NC, Comment Period Ends: 08/30/2010, Contact: John Winkle 202–493–60607.

EIS No. 20100202, Draft EIS, USFS, TX, Comal County Regional Habitat Conservation Plan, Application for Incidental Take Permit, Comal County, TX, Comment Period Ends: 07/28/2010, Contact: Bill Seawell 512–490–0057.

EIS No. 20100203, Draft Supplement, USFS, AK, Programmatic EIS—Exxon Valdez Oil Spill Restoration Plan DOI/DOC, New Circumstances Bearing on the Council's Restoration Effort, Implementation, Prince William Sound, Gulf of Alaska, AK, Comment Period Ends: 07/19/2010, Contact: Laurel Jennings 206–526–4525.

EIS No. 20100204, Final EIS, USN, GU, Mariana Islands Range Complex (MIRC), To Address Ongoing and Proposed Military Training Activities, Mariana Islands, GU, Wait Period Ends: 07/06/2010, Contact: Nora Macariola-See 808–472–1402.

EIS No. 20100205, Draft Supplement, USFS, CA, Beaverslide Timber Sale and Fuel Treatment Project, Additional Analysis and New Information, Six Rivers National Forest, Mad River Range District, Trinity County, CA, Comment Period Ends: 07/19/2010, Contact: Thomas Hudson 707–574–6233.

EIS No. 20100206, Draft EIS, FHWA, OR, Newberg Dundee Bypass Project, Proposal to Build a Four Lane Expressway and Reduce Congestion on OR 99W, from OR 99W/OR 8 to the top of Rex Hill, USACE 404/Removal Fill Permits, Funding, Yamhill and Washington Counties, OR, Comment Period Ends: 07/19/2010, Contact: Michelle Eraut 503–587–4716.

EIS No. 20100207, Draft EIS, USFS, SD, Nautilus Project Area, Multiple Resource Management Actions, Implementation, Black Hills National Forest, Northern Hills Ranger District, Lawrence, Meade and Pennington, SD, Comment Period Ends: 07/19/2010, Contact: Chris Stores 605–642–4622.

Amended Notices

EIS No. 20100189, Final EIS, NPS, AK, Legislative—Glacier Bay National Park Project, Authorize Harvest of Glaucous-Winged Gull Eggs by the Huna Tlingit, Implementation, AK, Wait Period Ends: 06/28/2010, Contact: Cherry Payne 907–697–2230.

Revision to FR Notice Published 5/28/2010: Correction to Lead Agency from BLM to NPS.

EIS No. 20100193, Final EIS, FRA, CA, Adoption—March 2004 Transbay Terminal/Caltrain Downtown Extension/Redevelopment Program (Transbay Program) Phase 1, San Francisco, San Mateo and Santa Clara, CA, Wait Period Ends: 06/28/2010, Contact: David Valenstein 202–493–6368.

Revision to FR Notice Published 05/28/2010: Correction to Contact Person Name and Telephone.

Dated: June 1, 2010.

Robert W. Hargrove,

Director, NEPA Compliance Division, Office of Federal Activities.

[FR Doc. 2010–13458 Filed 6–3–10; 8:45 am]

BILLING CODE 6560–50–P

ENVIRONMENTAL PROTECTION AGENCY

[EPA–HQ–OPP–2010–0421; FRL–8826-1]

Pesticide Products; Registration Applications

AGENCY: Environmental Protection Agency (EPA).

ACTION: Notice.

SUMMARY: EPA has received applications to register pesticide products containing Fluxapyroxad, an active ingredient not included in any previously registered pesticide product. Pursuant to the provisions of section 3(c)(4) of the Federal Insecticide, Fungicide, and Rodenticide Act (FIFRA), EPA is hereby providing notice of receipt and opportunity to comment on these applications.

DATES: Comments must be received on or before July 6, 2010.

ADDRESSES: Submit your comments, identified by docket identification (ID) number EPA–HQ–OPP–2010–0421, by one of the following methods:

- *Federal eRulemaking Portal*: *http://www.regulations.gov*. Follow the on-line instructions for submitting comments.
- *Mail*: Office of Pesticide Programs (OPP) Regulatory Public Docket (7502P), Environmental Protection Agency, 1200 Pennsylvania Ave., NW., Washington, DC 20460–0001.
- *Delivery*: OPP Regulatory Public Docket (7502P), Environmental Protection Agency, Rm. S–4400, One Potomac Yard (South Bldg.), 2777 S. Crystal Dr., Arlington, VA. Deliveries are only accepted during the Docket Facility's normal hours of operation (8:30 a.m. to 4 p.m., Monday through Friday, excluding legal holidays). Special arrangements should be made for deliveries of boxed information. The Docket Facility telephone number is (703) 305–5805.

Instructions: Direct your comments to docket ID number EPA–HQ–OPP–2010–0421. EPA's policy is that all comments received will be included in the docket without change and may be made available on-line at *http://www.regulations.gov*, including any personal information provided, unless the comment includes information claimed to be Confidential Business

Information (CBI) or other information whose disclosure is restricted by statute. Do not submit information that you consider to be CBI or otherwise protected through regulations.gov or e-mail. The regulations.gov website is an "anonymous access" system, which means EPA will not know your identity or contact information unless you provide it in the body of your comment. If you send an e-mail comment directly to EPA without going through regulations.gov, your e-mail address will be automatically captured and included as part of the comment that is placed in the docket and made available on the Internet. If you submit an electronic comment, EPA recommends that you include your name and other contact information in the body of your comment and with any disk or CD-ROM you submit. If EPA cannot read your comment due to technical difficulties and cannot contact you for clarification, EPA may not be able to consider your comment. Electronic files should avoid the use of special characters, any form of encryption, and be free of any defects or viruses.

Docket: All documents in the docket are listed in the docket index available at *http://www.regulations.gov*. Although, listed in the index, some information is not publicly available, e.g., CBI or other information whose disclosure is restricted by statute. Certain other material, such as copyrighted material, is not placed on the Internet and will be publicly available only in hard copy form. Publicly available docket materials are available either in the electronic docket at *http://www.regulations.gov*, or, if only available in hard copy, at the OPP Regulatory Public Docket in Rm. S–4400, One Potomac Yard (South Bldg.), 2777 S. Crystal Dr., Arlington, VA. The hours of operation of this Docket Facility are from 8:30 a.m. to 4 p.m., Monday through Friday, excluding legal holidays. The Docket Facility telephone number is (703) 305–5805.

FOR FURTHER INFORMATION CONTACT: Olga Odiott, Registration Division (7505P), Office of Pesticide Programs, Environmental Protection Agency, 1200 Pennsylvania Ave., NW., Washington, DC 20460–0001; telephone number: (703) 308–9369; e-mail address: [*odiott.olga]@epa.gov*.

SUPPLEMENTARY INFORMATION:

I. General Information

A. Does this Action Apply to Me?

You may be potentially affected by this action if you are an agricultural producer, food manufacturer, or pesticide manufacturer. Potentially affected entities may include, but are not limited to:

- Crop production (NAICS code 111).
- Animal production (NAICS code 112).
- Food manufacturing (NAICS code 311).
- Pesticide manufacturing (NAICS code 32532).

This listing is not intended to be exhaustive, but rather provides a guide for readers regarding entities likely to be affected by this action. Other types of entities not listed in this unit could also be affected. The North American Industrial Classification System (NAICS) codes have been provided to assist you and others in determining whether this action might apply to certain entities. If you have any questions regarding the applicability of this action to a particular entity, consult the person listed under **FOR FURTHER INFORMATION CONTACT**.

B. What Should I Consider as I Prepare My Comments for EPA?

1. *Submitting CBI*. Do not submit this information to EPA through regulations.gov or e-mail. Clearly mark the part or all of the information that you claim to be CBI. For CBI information in a disk or CD-ROM that you mail to EPA, mark the outside of the disk or CD-ROM as CBI and then identify electronically within the disk or CD-ROM the specific information that is claimed as CBI. In addition to one complete version of the comment that includes information claimed as CBI, a copy of the comment that does not contain the information claimed as CBI must be submitted for inclusion in the public docket. Information so marked will not be disclosed except in accordance with procedures set forth in 40 CFR part 2.

2. *Tips for preparing your comments*. When submitting comments, remember to:

i. Identify the document by docket ID number and other identifying information (subject heading, **Federal Register** date and page number).

ii. Follow directions. The Agency may ask you to respond to specific questions or organize comments by referencing a Code of Federal Regulations (CFR) part or section number.

iii. Explain why you agree or disagree; suggest alternatives and substitute language for your requested changes.

iv. Describe any assumptions and provide any technical information and/or data that you used.

v. If you estimate potential costs or burdens, explain how you arrived at your estimate in sufficient detail to allow for it to be reproduced.

vi. Provide specific examples to illustrate your concerns and suggest alternatives.

vii. Explain your views as clearly as possible, avoiding the use of profanity or personal threats.

viii. Make sure to submit your comments by the comment period deadline identified.

II. Registration Applications

EPA has received applications to register pesticide products containing Fluxapyroxad, an active ingredient not included in any previously registered pesticide product. Pursuant to the provisions of section 3(c)(4) of FIFRA, EPA is hereby providing notice of receipt and opportunity to comment on these applications. Notice of receipt of these applications does not imply a decision by the Agency on these applications. EPA received the following pesticide registration applications from BASF Corporation, 26, Davis Drive, P.O. Box 13528, Research Triangle Park, NC 27709–3528.

1. *File Symbol*: 7969–GRE. *Product name*: Xemium Fungicide Technical. *Active ingredient*: Fluxapyroxad at 98.9%. *Proposed use*: Formulation into fungicide products.

2. *File Symbol*: 7969–GNA. *Product name*: BAS 700 01 F. *Active ingredient*: Fluxapyroxad at 5.96%. *Propose uses*: Barley, corn, dried shelled peas and beans, edible podded legumes vegetables, fruiting vegetables, oat, oilseed crops (including canola, flax, and sunflower), peanut, pome fruits, rye, soybean, stone fruits, succulent shelled peas and beans, sugar beet, tuberous and corm vegetables (including potato) wheat, and triticale.

3. *File Symbol*: 7969–GNT *Product name*: BAS 700 02 F. *Active ingredient*: Fluxapyroxad at 28.78%. *Proposed uses*: Seed treatment use on barley, corn, cotton, dried shelled peas and beans, edible podded legume vegetables, oat, peanut, rye, sorghum, soybean, sunflower, wheat, and triticale seed.

4. *File Symbol*: 7969–GNI. *Product name*: BAS 700 03 F. *Active ingredient*: Fluxapyroxad at 28.70%. *Proposed uses*: Seed treatment use on barley, corn, cotton, dried shelled peas and beans, edible podded legume vegetables, oat, peanut, rye, sorghum, soybean, sunflower, wheat, and triticale seed.

5. *File Symbol*: 7969–GNO. *Product name*: BAS 700 04 F. *Active ingredient*: Fluxapyroxad at 26.55%. *Proposed uses*: Barley, corn, dried shelled peas and beans, edible podded legumes vegetables, fruiting vegetables, oat, oilseed crops (including canola, flax,

and sunflower), peanut, pome fruits, rye, soybean, stone fruits, succulent shelled peas and beans, sugar beet, tuberous and corm vegetables (including potato), wheat, and triticale.

6. *File Symbol*: 7969–GRN. *Product name*: BAS 703 01 F. *Active ingredient*: Fluxapyroxad at 21.26% and Pyraclostrobin at 21.26 %. *Proposed uses*: Dried shelled peas and beans, edible podded legumes vegetables, fruiting vegetables (including tomato), oilseed crops (including canola, flax, and sunflower), pome fruits, soybean, stone fruits, succulent shelled peas and beans, and tuberous and corm vegetables (including potato).

7. *File Symbol*: 7969–GRR. *Product name*: BAS 703 02 F. *Active ingredient*: Fluxapyroxad at 14.33% and *Pyraclostrobin* at 28.58% *Proposed uses*: Barley, corn, fruiting vegetables (including tomato), oat, oilseed crops (including canola, flax, and sunflower), peanut, rye, soybean, sugar beet, tuberous and corm vegetables, (including potato), wheat, and triticale.

List of Subjects

Environmental protection, Pesticides and pest.

Dated: May 26, 2010.

Daniel J. Rosenblatt,

Acting Director, Registration Division, Office of Pesticide Programs.

[FR Doc. 2010–13358 Filed 6–3–10; 8:45 am]

BILLING CODE 6560–50–S

EQUAL EMPLOYMENT OPPORTUNITY COMMISSION

Agency Information Collection Activities: Existing Collection; Emergency Extension

AGENCY: Equal Employment Opportunity Commission.

ACTION: Notice of information collection—emergency extension without change: ADEA waivers.

SUMMARY: In accordance with the Paperwork Reduction Act, the Equal Employment Opportunity Commission (EEOC or Commission) announces that it submitted to the Office of Management and Budget (OMB) a request for an emergency extension of the existing collection requirements under 29 CFR 1625.22, Waivers of rights and claims under the Age Discrimination in Employment Act (ADEA), on May 27, 2010, to be effective after the May 31, 2010 expiration date.

FOR FURTHER INFORMATION CONTACT: Thomas J. Schlageter, Assistant Legal Counsel, (202) 663–4668, or Erin N. Norris, Senior Attorney, (202) 663–4876, Office of Legal Counsel, 131 M Street, NE., Washington, DC 20507.

SUPPLEMENTARY INFORMATION: The EEOC enforces the ADEA of 1967, as amended, 29 U.S.C. 621 *et seq.*, which prohibits discrimination against employees and applicants for employment who are age 40 or older. Congress amended the ADEA by enacting the Older Workers Benefit Protection Act of 1990 (OWBPA), Public Law 101–433, 104 Stat. 983 (1990), to clarify the prohibitions against discrimination on the basis of age. In Title II of OWBPA, Congress addressed waivers of rights and claims under the ADEA, amending section 7 of the ADEA by adding a new subsection (f), 29 U.S.C. 626(f). The provisions of Title II of OWBPA require employers to provide certain information to employees (but not to EEOC) in writing. The regulation at 29 CFR 1625.22 reiterates those requirements.

Overview of This Information Collection

Collection title: Informational requirements under Title II of the Older Workers Benefit Protection Act of 1990 (OWBPA), 29 CFR part 1625.

OMB number: 3046–0042.

Type of Respondent: Business, state or local governments, not-for-profit institutions.

Description of affected public: Any employer with 20 or more employees that seeks waiver agreements in connection with exit incentive or other employment termination programs (hereinafter, "Programs").

Number of responses: 13,700.

Reporting hours: 41,000.

Number of forms: None.

Abstract: This requirement involves providing adequate information in waiver agreements offered to a group or class of persons in connection with a Program, to satisfy the requirements of the OWBPA.

Burden statement: The only paperwork burden involved is the inclusion of the relevant data in waiver agreements under the OWBPA. The rule applies to those employers who have 20 or more employees and who offer waivers to a group or class of employees in connection with a Program.

For the Commission.

Dated: May 27, 2010.

Jacqueline A. Berrien,

Chair.

[FR Doc. 2010–13301 Filed 6–3–10; 8:45 am]

BILLING CODE 6570–01–P

FEDERAL DEPOSIT INSURANCE CORPORATION

Agency Information Collection Activities: Renewal of Currently Approved Collection (3064–0127); Submission for OMB Review; Comment Request

AGENCY: Federal Deposit Insurance Corporation (FDIC).

ACTION: Notice of information collection to be submitted to OMB for review and approval under the Paperwork Reduction Act, and Request for Comment.

SUMMARY: In accordance with requirements of the Paperwork Reduction Act of 1995 (44 U.S.C. 3501 *et seq.*), the FDIC may not conduct or sponsor, and the respondent is not required to respond to, an information collection unless it displays a currently valid Office of Management and Budget (OMB) control number. The FDIC, as part of its continuing effort to reduce paperwork and respondent burden, invites the general public and other Federal agencies to take this opportunity to comment on the renewal of existing information collections, as required by the PRA. On February 23, 2010 (75 FR 8076), the FDIC solicited public comment for a 60-day period on renewal of the following information collection: Occasional Qualitative Surveys information collection (OMB No. 3064–0127). One comment was received. (A customer apparently complained to a bank and thanked the FDIC for its support.) Therefore, the FDIC hereby gives notice of submission of its request for renewal to OMB for review.

DATES: Comments must be submitted on or before July 6, 2010.

ADDRESSES: Interested parties are invited to submit written comments. All comments should refer to the name of the collection. Comments may be submitted by any of the following methods:

- *http://www.FDIC.gov/regulations/laws/federa/lnotices.html.*
- *E-mail: comments@fdic.gov* Include the name of the collection in the subject line of the message.
- *Mail:* Gary A. Kuiper (202.898.3877), Counsel, Federal Deposit Insurance Corporation, F–1072, 550 17th Street, NW., Washington, DC 20429.
- *Hand Delivery:* Comments may be hand-delivered to the guard station at the rear of the 550 17th Street Building (located on F Street), on business days between 7 a.m. and 5 p.m.

A copy of the comments may also be submitted to the FDIC Desk Officer, Office of Information and Regulatory Affairs, Office of Management and Budget, New Executive Office Building, Washington, DC 20503.

FOR FURTHER INFORMATION CONTACT: Gary A. Kuiper at the FDIC address above.

SUPPLEMENTARY INFORMATION: The FDIC is proposing to renew this collection:

Title: Occasional Qualitative Surveys.

Estimated Number of Respondents and Burden Hours:

FDIC document	Number of surveys	Hours per survey	Number of respondents	Burden hours
Occasional Qualitative Surveys	15	1	850	12,750
Total	15	1	850	12,750

General Description of Collection: The information collected in these surveys is anecdotal in nature, that is, samples are not necessarily random, the results are not necessarily representative of a larger class of potential respondents, and the goal is not to produce a statistically valid and reliable database. Rather, the surveys are expected to yield anecdotal information about the particular experiences and opinions of members of the public, primarily staff at respondent banks or bank customers. The information is used to improve the way FDIC relates to its clients, to develop agendas for regulatory or statutory change, and in some cases to simply learn how particular policies or programs are working, or are perceived in particular cases.

Request for Comment

Comments are invited on: (a) Whether this collection of information is necessary for the proper performance of the FDIC's functions, including whether the information has practical utility; (b) the accuracy of the estimate of the burden of the information collection, including the validity of the methodology and assumptions used; (c) ways to enhance the quality, utility, and clarity of the information to be collected; and (d) ways to minimize the burden of the information collection on respondents, including through the use of automated collection techniques or other forms of information technology. All comments will become a matter of public record.

Dated at Washington, DC this 1st day of June, 2010.

Robert E. Feldman,

Executive Secretary, Federal Deposit Insurance Corporation.

[FR Doc. 2010–13434 Filed 6–3–10; 8:45 am]

BILLING CODE 6714–01–P

FEDERAL RESERVE SYSTEM

Change in Bank Control Notices; Acquisition of Shares of Bank or Bank Holding Companies

The notificants listed below have applied under the Change in Bank Control Act (12 U.S.C. 1817(j)) and § 225.41 of the Board's Regulation Y (12 CFR 225.41) to acquire a bank or bank holding company. The factors that are considered in acting on the notices are set forth in paragraph 7 of the Act (12 U.S.C. 1817(j)(7)).

The notices are available for immediate inspection at the Federal Reserve Bank indicated. The notices also will be available for inspection at the office of the Board of Governors. Interested persons may express their views in writing to the Reserve Bank indicated for that notice or to the offices of the Board of Governors. Comments must be received not later than June 21, 2010.

A. Federal Reserve Bank of San Francisco (Kenneth Binning, Vice President, Applications and Enforcement) 101 Market Street, San Francisco, California 94105–1579:

1. Daniel Hugh and Patricia L. Bowman, Fontana, California; to retain voting shares of Chino Commercial Bancorp, and thereby indirectly retain voting shares of Chino Commercial Bank, N.A., both of Chino, California.

Board of Governors of the Federal Reserve System, June 1, 2010.

Robert deV. Frierson,

Deputy Secretary of the Board.

[FR Doc. 2010–13421 Filed 6–3–10; 8:45 am]

BILLING CODE 6210–01–S

GOVERNMENT ACCOUNTABILITY OFFICE

Appointments to the Medicare Payment Advisory Commission (MedPAC)

AGENCY: Government Accountability Office (GAO).

ACTION: Notice of appointments.

SUMMARY: The Balanced Budget Act of 1997 established the Medicare Payment Advisory Commission (MedPAC) and gave the Comptroller General responsibility for appointing its members. This notice announces the appointment of four new members and the reappointment of two existing members.

DATES: Appointments are effective May 1, 2010.

ADDRESSES:

GAO: 441 G Street, NW., Washington, DC 20548.

MedPAC: 601 New Jersey Avenue, NW., Suite 9000, Washington, DC 20001.

FOR FURTHER INFORMATION CONTACT:

GAO: Office of Public Affairs, (202) 512–4800.

MedPAC: Mark E. Miller, PhD, (202) 220–3700.

SUPPLEMENTARY INFORMATION: To fill this year's vacancies I am announcing the following:

Newly appointed members are Scott Armstrong, President and Chief Executive Officer, Group Health Cooperative; Katherine Baicker, PhD, Professor of Health Economics, Department of Health Policy and Management, Harvard School of Public Health; Mary Naylor, PhD, RN, FAAN, Professor of Gerontology and Director of the NewCourtland Center for Transitions and Health, University of Pennsylvania, School of Nursing; and Con Uccello, FSA, MAAA, FCA, Senior Health Fellow of the American Academy of Actuaries. Their terms will expire in 2013.

The reappointed members, whose terms will also expire in April 2013, are Thomas M. Dean, MD, a family physician in Wessington Springs, South Dakota and Herb B. Kuhn, President and CEO of the Missouri Hospital Association. [42 U.S.C. 1395b–6.]

Gene L. Dodaro,

Acting Comptroller General of the United States.

[FR Doc. 2010–13360 Filed 6–3–10; 8:45 am]

BILLING CODE 1610–02–M

DEPARTMENT OF HEALTH AND HUMAN SERVICES

National Committee on Vital and Health Statistics: Meeting

Pursuant to the Federal Advisory Committee Act, the Department of Health and Human Services (HHS) announces the following advisory committee meeting.

Name: National Committee on Vital and Health Statistics (NCVHS), Full Committee Meeting.

Time and Date: June 16, 2010: 9 a.m.–5 p.m. and June 17, 2010: 9 a.m.–11:30 a.m.

Place: Sheraton Crystal City Hotel, 1800 Jefferson Davis Highway, Arlington, VA 22202.

Status: Open.

Purpose: At this meeting the Committee will hear presentations and hold discussions on several health data policy topics. On the morning of the first day the Committee will hear updates from the Department, the Center for Medicare and Medicaid Services, ONC, and the plans for the NCVHS 60th Anniversary Symposium. In the afternoon there will be Subcommittee breakout sessions.

On the morning of the second day the Committee will be briefed on the Community Data Initiative. There will also be a discussion of Committee plans for September 2010 and future meetings. Upon the adjournment of the full meeting, the Committee will convene at the National Academy of Science Keck Center for the NCVHS 60th Anniversary Symposium.

The times shown above are for the full Committee meeting. Subcommittee breakout sessions are scheduled for late in the afternoon of the first day. Agendas for these breakout sessions will be posted on the NCVHS Web site (URL below) when available.

Contact Person for More Information: Substantive program information as well as summaries of meetings and a roster of committee members may be obtained from Marjorie S. Greenberg, Executive Secretary, NCVHS, National Center for Health Statistics, Centers for Disease Control and Prevention, 3311 Toledo Road, Room 2402, Hyattsville, Maryland 20782, telephone (301) 458–4245. Information also is available on the NCVHS home page of the HHS Web site: *http://www.ncvhs.hhs.gov/,* where further information including an agenda will be posted when available.

Should you require reasonable accommodation, please contact the CDC Office of Equal Employment Opportunity on (301) 458–4EEO (4336) as soon as possible.

Dated: May 28, 2010.

James Scanlon,

Deputy Assistant Secretary for Science and Data Policy, Office of the Assistant Secretary for Planning and Evaluation.

[FR Doc. 2010–13496 Filed 6–3–10; 8:45 am]

BILLING CODE 4151–05–P

DEPARTMENT OF HEALTH AND HUMAN SERVICES

Centers for Medicare & Medicaid Services

[Document Identifier: CMS–10308]

Agency Information Collection Activities: Submission for OMB Review; Comment Request

AGENCY: Centers for Medicare & Medicaid Services.

In compliance with the requirement of section 3506(c)(2)(A) of the Paperwork Reduction Act of 1995, the Centers for Medicare & Medicaid Services (CMS), Department of Health and Human Services, is publishing the following summary of proposed collections for public comment. Interested persons are invited to send comments regarding this burden estimate or any other aspect of this collection of information, including any of the following subjects: (1) The necessity and utility of the proposed information collection for the proper performance of the Agency's function; (2) the accuracy of the estimated burden; (3) ways to enhance the quality, utility, and clarity of the information to be collected; and (4) the use of automated collection techniques or other forms of information technology to minimize the information collection burden.

1. *Type of Information Collection Request:* New collection; *Title of Information Collection:* Part C and D Complaints Resolution Performance Measures: *Use:* Part C Sponsors provide medical coverage through at-risk arrangements with CMS. Part C Sponsors include: Local Coordinated Care Plans which include health maintenance organizations (HMOs), preferred provider organizations (PPOs), and provider sponsored organizations (PSO) plans; Private fee-for-service plans (PFFS); Special needs plans (SNPs); Medical savings account (MSAs); and Regional PPOs. Part D Sponsors provide prescription drug benefit coverage through private at-risk prescription drug plans that offer drug-only coverage Prescription Drug Plans, or through Medicare Advantage (MA) plans that offer integrated prescription drug and health care coverage (MA–PD plans).

Due to Executive Order 13410, "Promoting Quality and Efficient Health Care in Federal Government Administered or Sponsored Health Care Programs," performance measurement ratings for Medicare Parts C & D can be found on Medicare Options Compare and the Medicare Prescription Drug Plan Finder (MPDPF), providing rating information for beneficiary use with plans being assigned a performance-based star rating. These ratings are provided to help beneficiaries make informed choices among the many plan alternatives available to them under Medicare Parts C and D.

The purpose of the project is to develop and support implementation of a performance measure for the Medicare Advantage (Part C) and Prescription Drug (Part D) programs that represents plan resolution of beneficiary complaints from the beneficiary perspective. The project includes development of methodologies for: (1) Identifying a statistically valid sample of beneficiary complaints needed to analyze the complaint's closure; (2) contacting, interviewing, and summarizing beneficiary experience; and, (3) summarizing/analyzing the resultant data to assess accuracy of the resolution of beneficiary complaints from the perspective of the beneficiaries via objective exploration of the beneficiary's complaint resolution experience. For a summary of changes, refer to the Part C and D Complaints Resolution Performance Measures Summary of Revisions document. *Form Number:* CMS–10308 (OMB#: 0938–New); *Frequency:* Yearly; *Affected Public:* Individuals and households; *Number of Respondents:* 5,300; *Total Annual Responses:* 5,300; *Total Annual Hours:* 884. (For policy questions regarding this collection contact Rachel Schreiber at 410–786–8657. For all other issues call 410–786–1326.)

To obtain copies of the supporting statement and any related forms for the proposed paperwork collections referenced above, access CMS Web Site address at *http://www.cms.hhs.gov/PaperworkReductionActof1995,* or E-mail your request, including your address, phone number, OMB number, and CMS document identifier, to Paperwork@cms.hhs.gov, or call the Reports Clearance Office on (410) 786–1326.

To be assured consideration, comments and recommendations for the proposed information collections must be received by the OMB desk officer at the address below, no later than 5 p.m. on July 6, 2010.

OMB, Office of Information and Regulatory Affairs, Attention: CMS Desk Officer, Fax Number: (202) 395–6974, E-mail: *OIRA_submission@omb.eop.gov.*

Dated: *May 28, 2010.*

Martique Jones,

Director, Regulations Development Division-B, Office of Strategic Operations and Regulatory Affairs.

[FR Doc. 2010–13302 Filed 6–3–10; 8:45 am]

BILLING CODE 4120–01–P

DEPARTMENT OF HEALTH AND HUMAN SERVICES

Centers for Medicare & Medicaid Services

[Document Identifier: CMS–10203]

Agency Information Collection Activities: Proposed Collection; Comment Request

AGENCY: Centers for Medicare & Medicaid Services.

In compliance with the requirement of section 3506(c)(2)(A) of the Paperwork Reduction Act of 1995, the Centers for Medicare & Medicaid Services (CMS) is publishing the following summary of proposed collections for public comment. Interested persons are invited to send comments regarding this burden estimate or any other aspect of this collection of information, including any of the following subjects: (1) The necessity and utility of the proposed information collection for the proper performance of the agency's functions; (2) the accuracy of the estimated burden; (3) ways to enhance the quality, utility, and clarity of the information to be collected; and (4) the use of automated collection techniques or other forms of information technology to minimize the information collection burden.

1. *Type of Information Collection Request:* Revision of a currently approved collection; *Title of Information Collection:* Medicare Health Outcomes Survey (HOS); *Use:* CMS has a responsibility to its Medicare beneficiaries to require that care provided by managed care organizations under contract to CMS is of high quality. One way of ensuring high quality care in Medicare Managed Care Organizations (MCOs), or more commonly referred to as Medicare Advantage Organizations (MAOs), is through the development of standardized, uniform performance measures to enable CMS to gather the data needed to evaluate the care provided to Medicare beneficiaries.

The goal of the Medicare HOS program is to gather valid, reliable, clinically meaningful health status data in Medicare managed care for use in quality improvement activities, plan accountability, public reporting, and improving health. All managed care plans with Medicare Advantage (MA) contracts must participate. CMS, in collaboration with the National Committee for Quality Assurance (NCQA), launched the Medicare HOS as part of the Effectiveness of Care component of the former Health Plan Employer Data and Information Set, now known as the Healthcare Effectiveness Data and Information Set (HEDIS®).

The HOS measure was developed under the guidance of a Technical Expert Panel comprised of individuals with specific expertise in the health care industry and outcomes measurement. The measure includes the most recent advances in summarizing physical and mental health outcomes results and appropriate risk adjustment techinques. In addition to health outcomes measures, the HOS is used to collect the Management of Urinary Incontinence in Older Adults, Physical Activity in Older Adults, Fall Risk Management, and Osteoporosis Testing in Older Women HEDIS® measures. The collection of Medicare HOS is necessary to hold Medicare managed care contractors accountable for the quality of care they are delivering. This reporting requirement allows CMS to obtain the information necessary for proper oversight of the Medicar Advantage program. *Form Number:* CMS–10203 (OMB#: 0938–0701; *Frequency:* Yearly; *Affected Public:* Individuals and households; *Number of Respondents:* 1,099,560 *Total Annual Responses:* 1,099,560; *Total Annual Hours:* 366,520 (For policy questions regarding this collection contact Chris Haffer at 410–786–8764. For all other issues call 410–786–1326.)

To obtain copies of the supporting statement and any related forms for the proposed paperwork collections referenced above, access CMS' Web Site at *http://www.cms.hhs.gov/PaperworkReductionActof1995,* or E-mail your request, including your address, phone number, OMB number, and CMS document identifier, to *Paperwork@cms.hhs.gov,* or call the Reports Clearance Office on (410) 786–1326.

In commenting on the proposed information collections please reference the document identifier or OMB control number. To be assured consideration, comments and recommendations must be submitted in one of the following ways by *August 3, 2010:*

1. *Electronically.* You may submit your comments electronically to *http://www.regulations.gov.* Follow the instructions for "Comment or Submission" or "More Search Options" to find the information collection document(s) accepting comments.

2. *By regular mail.* You may mail written comments to the following address: CMS, Office of Strategic Operations and Regulatory Affairs, Division of Regulations Development, Attention: Document Identifier/OMB Control Number, Room C4–26–05, 7500 Security Boulevard, Baltimore, Maryland 21244–1850.

Date: *May 28, 2010.*

Martique Jones,

Director, Regulations Development Division-B, Office of Strategic Operations and Regulatory Affairs.

[FR Doc. 2010–13303 Filed 6–3–10; 8:45 am]

BILLING CODE 4120–01–P

DEPARTMENT OF HEALTH AND HUMAN SERVICES

Food and Drug Administration

[Docket No. FDA–2008–P–0278]

Determination That Cysteine Hydrochloride Injection, USP, 7.25%, Was Not Withdrawn From Sale for Reasons of Safety or Effectiveness

AGENCY: Food and Drug Administration, HHS.

ACTION: Notice.

SUMMARY: The Food and Drug Administration (FDA) is announcing its determination that Cysteine Hydrochloride Injection, USP, 7.25% (Cysteine HCl), was not withdrawn from sale for reasons of safety or effectiveness. This determination will allow FDA to approve abbreviated new drug applications (ANDAs) for Cysteine HCl if all other legal and regulatory requirements are met.

FOR FURTHER INFORMATION CONTACT: David Joy, Center for Drug Evaluation and Research, Food and Drug Administration, 10903 New Hampshire Ave., Bldg. 51, rm. 6358, Silver Spring, MD 20993–0002, 301–796–3601.

SUPPLEMENTARY INFORMATION: In 1984, Congress enacted the Drug Price Competition and Patent Term Restoration Act of 1984 (Public Law 98–417) (the 1984 amendments), which authorized the approval of duplicate versions of drug products approved under an ANDA procedure. ANDA applicants must, with certain exceptions, show that the drug for which they are seeking approval contains the same active ingredient in the same strength and dosage form as the "listed drug," which is a version of the drug that was previously approved.

Sponsors of ANDAs do not have to repeat the extensive clinical testing otherwise necessary to gain approval of a new drug application (NDA). The only clinical data required in an ANDA are data to show that the drug that is the subject of the ANDA is bioequivalent to the listed drug.

The 1984 amendments include what is now section 505(j)(7) of the Federal Food, Drug, and Cosmetic Act (21 U.S.C. 355(j)(7)), which requires FDA to publish a list of all approved drugs. FDA publishes this list as part of the "Approved Drug Products With Therapeutic Equivalence Evaluations," which is known generally as the "Orange Book." Under FDA regulations, drugs are removed from the list if the agency withdraws or suspends approval of the drug's NDA or ANDA for reasons of safety or effectiveness or if FDA determines that the listed drug was withdrawn from sale for reasons of safety or effectiveness (§ 314.162 (21 CFR 314.162)). Under § 314.161(a)(1) (21 CFR 314.161(a)(1)), the agency must determine whether a listed drug was withdrawn from sale for reasons of safety or effectiveness before an ANDA that refers to that listed drug may be approved. FDA may not approve an ANDA that does not refer to a listed drug.

Cysteine HCl is the subject of NDA 19–523, most recently held by Hospira, Inc. (Hospira), and initially approved on October 22, 1986. Cysteine HCl is indicated for use as an additive to amino acid solutions to meet the nutritional requirements of newborn infants requiring total parenteral nutrition (TPN) and of adult and pediatric patients with severe liver disease who may have impaired enzymatic processes and require TPN. It can also be added to amino acid solutions to provide a more complete profile of amino acids for protein synthesis. Hospira notified FDA in a letter dated May 26, 2005, that it had not commercially manufactured and marketed Cysteine HCl, and voluntarily asked that the NDA be withdrawn. The drug product was moved to the "Discontinued Drug Product List" section of the Orange Book, and FDA withdrew approval of NDA 19–523 effective June 16, 2006 (71 FR 34940). In previous instances (see, e.g., 74 FR 63404, December 3, 2009; 72 FR 9763, March 5, 2007; 61 FR 25497, May 21, 1996), the agency has determined that, for purposes of §§ 314.161 and 314.162, never marketing an approved drug product is equivalent to withdrawing the drug from sale. Regulus Pharmaceutical Consulting, Inc., submitted a citizen petition, dated April 30, 2008 (Docket No. FDA–2008–P–0278), under 21 CFR 10.30, requesting that the agency determine whether Cysteine HCl was withdrawn from sale for reasons of safety or effectiveness.

FDA has reviewed its records and, under § 314.161, has determined that Cysteine Hydrochloride Injection, USP, 7.25%, was not withdrawn for reasons of safety or effectiveness. We have also independently evaluated relevant literature and have found no information that would indicate that this product was withheld from sale for reasons of safety or effectiveness. Accordingly, the agency will continue to list Cysteine Hydrochloride Injection, USP, 7.25%, in the "Discontinued Drug Product List" section of the Orange Book. The "Discontinued Drug Product List" delineates, among other items, drug products that have been discontinued from marketing for reasons other than safety or effectiveness. ANDAs that refer to Cysteine Hydrochloride Injection, USP, 7.25% may be approved by the agency if all other legal and regulatory requirements for the approval of ANDAs are met. If FDA determines that the labeling for this drug product should be revised to meet current standards, the agency will advise ANDA applicants to submit such labeling.

Dated: May 27, 2010.

Leslie Kux,

Acting Assistant Commissioner for Policy.

[FR Doc. 2010–13463 Filed 6–3–10; 8:45 am]

BILLING CODE 4160–01–S

DEPARTMENT OF HEALTH AND HUMAN SERVICES

National Institutes of Health

Government-Owned Inventions; Availability for Licensing

AGENCY: National Institutes of Health, Public Health Service, HHS.

ACTION: Notice.

SUMMARY: The inventions listed below are owned by an agency of the U.S. Government and are available for licensing in the United States in accordance with 35 U.S.C. 207 to achieve expeditious commercialization of results of Federally-funded research and development. Foreign patent applications are filed on selected inventions to extend market coverage for companies and may also be available for licensing.

ADDRESSES: Licensing information and copies of the U.S. patent applications listed below may be obtained by writing to the indicated licensing contact at the Office of Technology Transfer, National Institutes of Health, 6011 Executive Boulevard, Suite 325, Rockville, Maryland 20852–3804; telephone: 301/496–7057; fax: 301/402–0220. A signed Confidential Disclosure Agreement will be required to receive copies of the patent applications.

888-mel: A Target for Anti-Tumor Immune Responses

Description of Invention: Scientists at the National Institutes of Health (NIH) have developed a human melanoma cell line designated 888-mel from the resected tumor of a 26-year old Caucasian female (patient 888) diagnosed with metastatic melanoma, a frequently terminal cancer. The 888-mel cell line was derived from three separate subcutaneous melanoma lesions on the patient and possesses many characteristics representative of melanoma cell lines developed by these researchers. Most prominently, the 888-mel cell line was used to develop a tumor infiltrating lymphocyte (TIL) culture with high affinity for the tumor cells of patient 888. When the TIL 888 culture was provided as an autologous adoptive immunotherapy treatment to patient 888 in combination with interleukin-2 (IL–2), a complete remission of subcutaneous, lung, and mucosal metastases was observed in the patient for over three years.

Since this medical breakthrough, the 888-mel cell line has been well characterized through various laboratory procedures and data involving this cell line has been published as part of numerous articles. Studies have shown that the cell line expresses a variety of tumor associated antigens (TAAs), including tyrosinase, TRP1, TRP2, gp100, MART–1, p15, gp75, mutated beta-catenin, and p53. However, 888-mel does not normally express the MAGE 1, 2, or 3 TAAs. Many melanoma cell lines are HLA–A2 restricted, but the 888-mel cell line is HLA–A2 negative. The HLA class I typing for this cell line is as follows: HLA–A0101, A2402, B55, B62, Cw5201, Cw55, DRbl*1502, DRbl*1610, DQbl*0601, DRb5*0102, DRb5*0203. 888-mel is a validated source of HLA class I peptides utilized in screens that test the reactivity of TIL cultures that are candidates for adoptive immunotherapy trials. 888-mel is also a standard cell line for studying immune responses in cancer, particularly T cell responses. Other experiments show that roscovitine, a cyclin-dependent kinase inhibitor, can induce apoptosis in the 888-mel cell line, so these cells may be useful in various cell death studies.

Applications

• Research tool for investigating the key immune responses required to mediate the remission of metastatic melanoma in order to identify the immune cell types necessary to produce an effective immunotherapy.

• Research tool for investigating the tumor associated antigens that contribute to the dampening of the immune response in many melanoma tumors so that researchers can better understand how to boost immunogenicity against these antigens.

• Source material for tumor associated peptides that could serve as melanoma vaccine candidates or utilized to determine the reactivity of tumor infiltrating lymphocyte (TIL) cultures being considered for clinical trials.

• Source material for the development of TIL cultures for use in adoptive immunotherapy protocols to treat melanoma patients.

Advantages

• *Cell line is derived from a melanoma patient that underwent complete tumor remission:* Immune cell cultures capable of treating melanoma patients in adoptive immunotherapy protocols could be derived from the tumor associated antigen epitopes found on the 888-mel cell line. This cell line may be a source of novel antigenic peptides capable of triggering immune responses in melanoma patients that lead to tumor regression or stabilization. 888-mel cells have been shown to retain many features of primary melanoma samples, including the expression of common tumor associated antigens.

• *888-mel is an HLA–A2 negative cell line:* A majority of the cancer vaccines and immunotherapies developed to date have focused on utilizing HLA–A2 restricted tumor epitopes since this HLA allele is largely expressed in the human population. However, therapies restricted to HLA–A2 recognition will not be successful in melanoma patients that do not express this allele. For these patients, additional therapies are needed that are directed against melanoma tumor epitopes presented by different HLA alleles.

• *The 888-mel cell line has been well characterized through multiple years of study and is a fundamental cell line for melanoma studies:* The collection of tumor associated antigens expressed by this cell line have been determined through multiple studies, many of which were performed by researchers in the inventors' laboratory. A significant amount of data has also been compiled detailing the immune responses triggered by 888-mel cells.

Inventors: Steven A. Rosenberg (NCI) *et al.*

Selected Publications

1. J Weber *et al.* Expression of the MAGE–1 tumor antigen is up-regulated by the demethylating agent 5-aza-2[1]-deoxycytidine. Cancer Res. 1994 Apr 1; 54(7):1766–1771. [PubMed: 7511051]

2. PF Robbins *et al.* Recognition of tyrosinase by tumor-infiltrating lymphocytes from a patient responding to immunotherapy. Cancer Res. 1994 Jun 15; 54(12):3124–3126. Erratum in: Cancer Res. 1994 Jul 15; 54(14):3952. [PubMed: 8205528]

3. PF Robbins *et al.* Multiple HLA class II-restricted melanocyte differentiation antigens are recognized by tumor-infiltrating lymphocytes from a patient with melanoma. J Immunol. 2002 Nov 15; 169(10):6036–6047. [PubMed: 12421991]

Patent Status: HHS Reference No. E–070–2010/0—Research Tool. Patent protection is not being pursued for this technology.

Licensing Status: Available for licensing under a Biological Materials License Agreement.

Licensing Contact: Samuel E. Bish, PhD; 301–435–5282; *bishse@mail.nih.gov.*

Collaborative Research Opportunity: The Surgery Branch, National Cancer Institute, is seeking statements of capability or interest from parties interested in collaborative research to carry out genotypic as well as phenotypic analysis of the 888-mel cell line in order to better understand the nature of tumor cells that respond to therapy. In addition, this cell line can be used as a target of humoral or cell mediated immune responses as a part of studies characterizing the nature of immune responses directed against tumor cells. Please contact John Hewes, PhD at 301–435–3131 or *hewesj@mail.nih.gov* for more information.

UOK171, A Spontaneous Clear Cell Type Renal Cell Carcinoma (ccRCC) Human Cell Line Derived From a Surgically Removed Tumor

Description of Invention: Scientists at the National Institutes of Health (NIH) have developed a renal cell carcinoma (RCC) cell line designated UOK171 from the resected tumor of a patient diagnosed with stage IV high nuclear grade clear cell type renal cell carcinoma (ccRCC). The UOK171 cell line was immortalized spontaneously by mincing the resected tumor into pieces followed by propagation of the cells over more than twenty generations. One of the most prominent characteristics of this cell line is its intact, nonmutated von Hippel-Lindau (VHL) tumor suppressor gene. In the majority of sporadic and hereditary ccRCC cases, the VHL gene is functionally disrupted due to hypermethylation or the gene is completely lost. Thus, the UOK171 cell line is very useful as a positive control for VHL gene expression in studies of the genetic and molecular mechanisms underlying advanced ccRCC, a disease for which there is no effective treatment. Specifically, this cell line has been used as a non-methylated control cell line in studying the effects of 5–Aza-dCyd and Zebularine on VHL re-expression from methylated-VHL cell line models. These agents do not affect the methylation status of the VHL gene in UOK171. This cell line also exhibits decreased fibroblast growth factor 5 (FGF5) expression, unbalanced chromosome 3 translocations, translocations involving chromosome 14, the losses of chromosome 14 and 22, and chromosome structural aberration 1(8) (q10). UOK171 is also one of the 40-member cell lines in the National Cancer Institute (NCI) Urologic Oncology Branch (UOB) Tumor Cell Line Repository.

Applications

• Research tool for investigating the underlying molecular mechanisms contributing to advanced ccRCC, including the identification of new RCC tumor antigens for immunotherapy.

• Research tool for studying the methylation status of genes involved in ccRCC to reveal the genetic processes occurring in ccRCC tissues that may contribute to advanced disease.

• Positive control cell line for VHL gene expression and function studies, including cytogenetics, gene mutation research, and examination of chromosomal structural abnormalities that may contribute to ccRCC.

• Research tools for testing the activity of potential anti-cancer drugs against ccRCC, a disease which has no effective treatment options.

• Possible starting material for developing a cancer vaccine against RCC.

Advantages

• *Cell line is derived from a ccRCC patient:* These cell lines are anticipated to retain many features of primary ccRCC samples and novel ccRCC antigens identified from this cell line are likely to correlate with antigens expressed on human ccRCC tumors. Studies performed using these cell lines may have a direct correlation to the initiation, progression, treatment, and prevention of ccRCC in humans.

• *Expresses a non-mutated VHL gene:* In the majority of advanced ccRCC patients the VHL gene has been mutated or deleted. The UOK171 cell line represents a tool that can be utilized to study the impact of this VHL gene and various mutations on advanced ccRCC.

• *Molecular and genetic features are well characterized:* This cell line is part of NCI Urologic Oncology Branch's Tumor Cell Line Repository. The inventor has elucidated many physical characteristics of the cell line, including chromosomal attributes and important ccRCC genes, under various conditions.

Inventor: W. Marston Linehan (NCI).

Related Publications

1. WG Alleman *et al.* The *in vitro* and *in vivo* effects of re-expressing methylated von Hippel-Lindau tumor suppressor gene in clear cell renal carcinoma with 5-Aza-2′-deoxycytidine. Clin Cancer Res. 2004 Oct 15; 10(20):7011–7021. [PubMed: 15501981]

2. CP Pavlovich *et al.* Patterns of aneuploidy in stage IV clear cell renal carcinoma revealed comparative genomic hybridization and spectral karyotyping. Genes Chromosomes Cancer. 2003 Jul; 37(3):252–260. [PubMed: 12759923]

3. K Hanada *et al.* Identification of fibroblast growth factor-5 as an overexpressed antigen in multiple human adenocarcinomas. Cancer Res. 2001 Jul 15; 61(14):5511–5516. [PubMed: 11454700]

4. C Stolle *et al.* Improved detection of germline mutations in the von Hippel-Lindau disease tumor suppressor gene. Hum Mutat. 1998; 12(6):417–423. [PubMed: 9829911]

5. P Anglard *et al.* Molecular and cellular characterization of human renal cell carcinoma cell lines. Cancer Res. 1992 Jan 15; 52(2):348–356. [PubMed: 1345811]

Patent Status: HHS Reference No. E–033–2010/0—Research Tool. Patent protection is not being pursued for this technology.

Licensing Status: Available for licensing under a Biological Materials License Agreement.

Licensing Contact: Samuel E. Bish, Ph.D.; 301–435–5282; *bishse@mail.nih.gov*.

Collaborative Research Opportunity: The Urologic Oncology Branch, Center for Cancer Research, is seeking statements of capability or interest from parties interested in collaborative research to further develop, evaluate, or commercialize UOK171. Please contact John Hewes, Ph.D. at 301–435–3131 or *hewesj@mail.nih.gov* for more information.

Delivery of Transthyretin (TTR) Across the Blood Brain Barrier as a Treatment for Alzheimer's Disease

Description of Invention: The invention describes products and methods of treating Alzheimer's disease. Alzheimer's disease is characterized by the formation of amyloid plaques and tangles in areas of the brain critical for learning and memory. The products are a transthyretin and other blood brain barrier impermeable proteins transformed into blood brain barrier permeable forms by the coupling of an Inter-Cellular Adhesion Molecule-1 (ICAM-1) targeting agent. Transthyretin binds to, and inhibits amyloid protein from forming plaque deposits. Deposition of amyloid is thought to underlie the disease pathology of Alzheimer's. Thus, this invention treats Alzheimer's by inhibiting the formation of amyloid plaques, which normally would result in amyloid plaque formation, inflammation, and neuronal cell death.

Applications

• Therapeutic for Alzheimer's disease.

• Therapeutic for other amyloid-related diseases.

Development Status: Early stage.

Market: As of 2007 over 5 million people in America are living with Alzheimer's disease.

Inventors: Juan Marugan *et al.* (NHGRI)

Patent Status: U.S. Provisional Application No. 61/286,205 filed 14 Dec 2009 (HHS Reference No. E–268–2009/0–US–01).

Licensing Status: Available for licensing.

Licensing Contact: Steve Standley, Ph.D.; 301–435–4074; *sstand@od.nih.gov*.

Collaborative Research Opportunity: The NIH Chemical Genomics Center (NCGC) is open to collaborating in order to further develop this invention. Please contact Dr. Juan Marugan at *maruganj@mail.nih.gov* for more information about collaborative research opportunities.

Vaccines Comprising Sand Fly Salivary Proteins for Control of Leishmania Infection

Description of Invention: This invention relates to the use of several peptides from the salivary glands of various sand fly species for the control of leishmania infection. Many of these peptides were shown to be effective in eliciting potent immune responses in animal models and are excellent candidates for the development of vaccines against the disease. A vaccine comprising one of the peptides was used to protect mice challenged with parasites and salivary gland homogenates. A DNA vaccine containing the cDNA for this same peptide also provided protection that lasted at least 3 months after immunization and produced both intense humoral and delayed-type hypersensitivity reactions. Other experiments have shown that B cell-deficient mice immunized with the plasmid vaccine also successfully controlled leishmania infection. Current in-vivo studies continue to explore the use of these sand fly salivary peptides for use as animal vaccines.

Leishmania parasites are transmitted to their vertebrate hosts by infected sand fly bites. Sand fly saliva helps to enhance infection but immunity to the saliva protects against the infection, allowing the possibility of vaccine development. A number of major salivary proteins from sand fly species such as *Lutzomyia longipalpis, Phlebotomus ariasi,* and *Phlebotomus perniciosus* are claimed in the invention.

Leishmania infection affects as many as 12 million people worldwide, with 1.5–2 million new cases each year. Control of this disease will be a major milestone for public health efforts in endemic areas of the world. The current invention provides a potential means to achieve widespread vaccination that may lead to significantly control of the disease in areas such as South America, South Asia, and the Mediterranean where it is still a significant health problem. An effective veterinary vaccine will be of benefit to veterinary medicine and may pave the way for human vaccines against Leishmaniasis. The vaccination of animals may also have a positive impact on the epidemiology of the disease by reducing the number of animal reservoirs and the possibility of human infection.

Applications

• Vaccines to control leishmania infection.

• Use of peptides to elicit potent immune responses.

Development Status: Early stage.

Inventors: Jesus G. Valenzuela *et al.* (NIAID).

Related Publications

1. Oliveira F, Jochim RC, Valenzuela JG, Kamhawi S. Sand flies, Leishmania, and transcriptome-borne solutions. Parasitol Int. 2009 Mar; 58(1):1–5. [PubMed: 18768167]

2. Valenzuela JG, Garfield M, Rowton ED, Pham VM. Identification of the most

abundant secreted proteins from the salivary glands of the sand fly *Lutzomyia longipalpis,* vector of *Leishmania chagasi.* J Exp Biol. 2004 Oct; 207(Pt 21):3717–3729. [PubMed: 15371479]

3. Valenzuela JG, Belkaid Y, Garfield MK, Mendez S, Kamhawi S, Rowton ED, Sacks DL, Ribeiro JM. Toward a defined *anti-Leishmania* vaccine targeting vector antigens: Characterization of a protective salivary protein. J Exp Med. 2001 Aug 6; 194(3):331–342. [PubMed: 11489952]

4. Belkaid Y., Valenzuela JG, Kamhawi S., Rowton E., Sacks DL, Ribeiro JM. Delayed-type hypersensitivity to Phlebotomus papatasi sand fly bite: An adaptive response induced by the fly? Proc Natl Acad Sci U S A. 2000 Jun 6; 97(12):6704–6709. [PubMed: 10841567]

Patent Status

- U.S. Patent Application No. 60/422,303 filed October 29, 2002 (HHS Ref. No. E–285–2002/0–US–01).
- PCT Application No. PCT/US2003/03453 filed October 29, 2003 (HHS Ref. No E–285–2002/0–PCT–02). Application filed in the following countries: the USA, Europe, Brazil, Japan, Mexico, India and Israel.
- U.S. Patent No. 7,485,386 issued February 3, 2009 (HHS Reference No. E–285–2002/0–US–03).
- European Patent Number No. 1572968 issued April 22, 2009 (HHS Reference No. E–285–2002/0–EP–04).
- PCT Application No. PCT/US2009/042980 filed May 05, 2009 (HHS Reference No. E–189–2008/2–PCT–01).
- U.S. Patent Application No. 60/421,327 filed September 19, 2002 (HHS Ref. No. E–130–2002/0–US–01).
- PCT Application No. PCT/US03/29833 filed September 18, 2003 (HHS Ref. No. E–130–2002/0–PCT–02). Application filed in the following countries: USA, Europe, Brazil, Japan, Mexico, India and Israel.

Licensing Status: Available for licensing.

Licensing Contact: John Stansberry, PhD; 301–435–5236; *stansbej@mail.nih.gov*.

Collaborative Research Opportunity: The NIAID, OTD is seeking statements of capability or interest from parties interested in collaborative research to further develop, evaluate, or commercialize "Vaccines Comprising Sand Fly Salivary Proteins for Control of Leishmania Infection". Please contact Dana Hsu at 301–451–3521 for more information.

Dated: May 26, 2010.

Richard U. Rodriguez,

Director, Division of Technology Development and Transfer, Office of Technology Transfer, National Institutes of Health.

[FR Doc. 2010–13480 Filed 6–3–10; 8:45 am]

BILLING CODE 4140–01–P

DEPARTMENT OF HEALTH AND HUMAN SERVICES

Food and Drug Administration

[Docket No. FDA–2008–D–0406]

Information Sheet Guidance for Sponsors, Clinical Investigators, and IRBs; Frequently Asked Questions—Statement of Investigator (Form FDA 1572); Availability

AGENCY: Food and Drug Administration, HHS.

ACTION: Notice.

SUMMARY: The Food and Drug Administration (FDA) is announcing the availability of an information sheet guidance entitled, "Information Sheet Guidance for Sponsors, Clinical Investigators, and IRBs; Frequently Asked Questions—Statement of Investigator (Form FDA 1572)." This guidance is intended to assist sponsors, clinical investigators, and institutional review boards (IRBs) involved in clinical investigations of investigational drugs and biologics in completing the Statement of Investigator form (Form FDA 1572). FDA developed this information sheet guidance in response to numerous questions from the research community regarding Form FDA 1572. This information sheet guidance provides FDA's responses to the most frequently asked questions.

DATES: Submit either written or electronic comments on agency guidances at any time.

ADDRESSES: Submit written requests for single copies of the guidance to the Division of Drug Information (HFD–240), 10903 New Hampshire Ave., Silver Spring, MD 20993 or to the Office of Communication, Training, and Manufacturers Assistance (HFM–40), Center for Biologics Evaluation and Research, Food and Drug Administration, 1401 Rockville Pike, Rockville, MD 20852–1448. Send one self-addressed adhesive label to assist the office in processing your requests. Submit electronic comments to *http://www.regulations.gov*. See the **SUPPLEMENTARY INFORMATION** section for electronic access to the information sheet guidance document.

FOR FURTHER INFORMATION CONTACT: Joseph Salewski, Division of Scientific Investigations, Office of Compliance, Center for Drug Evaluation and Research, Food and Drug Administration, 10903 New Hampshire Ave., Silver Spring MD 20993, 301–796–3395.

SUPPLEMENTARY INFORMATION:

I. Background

FDA is announcing the availability of an information sheet guidance entitled, "Information Sheet Guidance for Sponsors, Clinical Investigators, and IRBs; Frequently Asked Questions—Statement of Investigator (Form FDA 1572)." This guidance is intended to assist sponsors, clinical investigators, and IRBs involved in clinical investigations of investigational drugs and biologics in complying with the requirement that each investigator complete and sign a Form FDA 1572 before participating in an investigation. This guidance describes how to complete the Statement of Investigator form (Form FDA 1572).

FDA developed this information sheet guidance in response to numerous questions from the research community regarding the Form FDA 1572. In this guidance, we provide answers to frequently asked questions concerning the purpose of this form, when this form needs to be completed and signed by the investigator, how to best complete the various blocks within the form, and when the form might need to be updated. In addition, we clarify questions related to the use of Form FDA 1572 by clinical investigators participating in studies conducted outside the United States that may or may not be under an investigational new drug application.

This information sheet guidance is part of the Information Sheet Guidance Initiative, announced on February 3, 2006, in the **Federal Register** (71 FR 5861), which describes FDA's intention to update the process for developing, issuing, and making available guidances intended for IRBs, clinical investigators, and sponsors. Known as "Information Sheets," these guidances have provided recommendations to IRBs, clinical investigators, and sponsors to help them fulfill their responsibilities to protect human subjects who participate in research regulated by the FDA since the early 1980s. The Information Sheet Guidance Initiative is intended to ensure that the Information Sheets are consistent with the FDA's good guidance practices (GGPs). As part of the initiative, which will be ongoing, the agency plans to rescind Information Sheets that are obsolete, revise and reissue Information Sheet Guidances that address current issues, and develop

new Information Sheet Guidances as needed.

In the **Federal Register** of July 29, 2008 (73 FR 43940), FDA announced the availability of a draft version of the guidance entitled, "Draft Information Sheet Guidance for Sponsors, Clinical Investigators, and IRBs; Frequently Asked Questions—Statement of Investigator (Form FDA 1572)." The July 2008 guidance gave interested persons an opportunity to submit comments through September 29, 2008. All comments received during the comment period have been carefully reviewed and, where appropriate, incorporated in the guidance. As a result of the public comments and editorial changes, the guidance is clearer than the draft version.

This information sheet guidance is being issued consistent with FDA's GGPs regulation (21 CFR 10.115). The information sheet guidance represents the agency's current thinking on completing the Form FDA 1572. It does not create or confer any rights for or on any person and does not operate to bind FDA or the public. An alternative approach may be used if such approach satisfies the requirements of the applicable statutes and regulations.

II. The Paperwork Reduction Act of 1995

This guidance refers to previously approved collections of information found in FDA regulations. These collections of information are subject to review by the Office of Management and Budget (OMB) under the Paperwork Reduction Act of 1995 (44 U.S.C. 3501–3520). The collections of information for Form FDA 1572 have been approved under OMB Control No. 0910–0014.

III. Comments

Interested persons may submit to the Division of Dockets Management (see **ADDRESSES**) either electronic or written comments regarding this document. It is only necessary to send one set of comments. It is no longer necessary to send two copies of mailed comments. Identify comments with the docket number found in brackets in the heading of this document. Received comments may be seen in the Division of Dockets Management between 9 a.m. and 4 p.m., Monday through Friday.

IV. Electronic Access

Persons with access to the Internet may obtain the document at either *http://www.fda.gov/Drugs/Guidance7ComplianceRegulatoryInformation/Guidances/default.htm* or *http://www.regulations.gov*.

Dated: May 27, 2010.

Leslie Kux,

Acting Assistant Commissioner for Policy.

[FR Doc. 2010–13420 Filed 6–3–10; 8:45 am]

BILLING CODE 4160–01–S

DEPARTMENT OF HEALTH AND HUMAN SERVICES

National Institutes of Health

Center for Scientific Review, Notice of Closed Meeting

Pursuant to section 10(d) of the Federal Advisory Committee Act, as amended (5 U.S.C. App.), notice is hereby given of the following meeting.

The meeting will be closed to the public in accordance with the provisions set forth in sections 552b(c)(4) and 552b(c)(6), Title 5 U.S.C., as amended. The grant applications and the discussions could disclose confidential trade secrets or commercial property such as patentable material, and personal information concerning individuals associated with the grant applications, the disclosure of which would constitute a clearly unwarranted invasion of personal privacy.

Name of Committee: Center for Scientific Review Special Emphasis Panel; Cell Death in Neurodegeneration.

Date: June 11, 2010.

Time: 9 a.m. to 12 p.m.

Agenda: To review and evaluate grant applications.

Place: Embassy Suites, 1250 22nd Street, NW., Washington, DC 20037.

Contact Person: Seetha Bhagavan, PhD, Scientific Review Officer, Center for Scientific Review, National Institutes of Health, 6701 Rockledge Drive, Room 5194, MSC 7846, Bethesda, MD 20892, (301) 237–9838, *bhagavas@csr.nih.gov*.

This notice is being published less than 15 days prior to the meeting due to the timing limitations imposed by the review and funding cycle.

(Catalogue of Federal Domestic Assistance Program Nos. 93.306, Comparative Medicine; 93.333, Clinical Research, 93.306, 93.333, 93.337, 93.393–93.396, 93.837–93.844, 93.846–93.878, 93.892, 93.893, National Institutes of Health, HHS)

Dated: May 27, 2010.

Jennifer Spaeth,

Director, Office of Federal Advisory Committee Policy.

[FR Doc. 2010–13412 Filed 6–3–10; 8:45 am]

BILLING CODE 4140–01–P

DEPARTMENT OF HEALTH AND HUMAN SERVICES

National Institutes of Health

Eunice Kennedy Shriver National Institute of Child Health & Human Development; Notice of Closed Meeting

Pursuant to section 10(d) of the Federal Advisory Committee Act, as amended (5 U.S.C. App.), notice is hereby given of the following meeting.

The meeting will be closed to the public in accordance with the provisions set forth in sections 552b(c)(4) and 552b(c)(6), Title 5 U.S.C., as amended. The grant applications and the discussions could disclose confidential trade secrets or commercial property such as patentable material, and personal information concerning individuals associated with the grant applications, the disclosure of which would constitute a clearly unwarranted invasion of personal privacy.

Name of Committee: National Institute of Child Health and Human Development Special Emphasis Panel, Pediatric Trials Network.

Date: June 23, 2010.

Time: 9 a.m. to 5 p.m.

Agenda: To review and evaluate contract proposals.

Place: Hyatt Regency Bethesda, One Bethesda Metro Center, 7400 Wisconsin Avenue, Bethesda, MD 20814.

Contact Person: Sathasiva B. Kandasamy, PhD, Scientific Review Administrator, Division of Scientific Review, National Institute of Child Health and Human Development, 6100 Executive Boulevard, Room 5B01, Bethesda, MD 20892–9304. (301) 435–6680. *skandasa@mail.nih.gov.*

(Catalogue of Federal Domestic Assistance Program Nos. 93.864, Population Research; 93.865, Research for Mothers and Children; 93.929, Center for Medical Rehabilitation Research; 93.209, Contraception and Infertility Loan Repayment Program, National Institutes of Health, HHS)

Dated: May 26, 2010.

Jennifer Spaeth,

Director, Office of Federal Advisory Committee Policy.

[FR Doc. 2010–13482 Filed 6–3–10; 8:45 am]

BILLING CODE 4140–01–P

DEPARTMENT OF HEALTH AND HUMAN SERVICES

National Institutes of Health

Office of Biotechnology Activities; Recombinant DNA Research: Amended Notice of Meeting

ACTION: Notice of cancellation of consideration of a proposed action

under Section III–A–1 of the *NIH Guidelines for Research Involving Recombinant DNA Molecules (NIH Guidelines).*

SUMMARY: Notice of a discussion of a proposed action under Section III–A–1 published on May 24, 2010 (75 FR 28811) is withdrawn. The discussion that was to be held at the June 16–17, 2010 meeting of the NIH Recombinant DNA Advisory Committee has been deferred at the request of the principal investigator.

FOR FURTHER INFORMATION CONTACT: OBA by e-mail at *oba@od.nih.gov,* or telephone at 301–496–9838, if you have questions, or require additional information.

Dated: May 26, 2010.

Jacqueline Corrigan-Curay,

Acting Director, Office of Biotechnology Activities, National Institutes of Health.

[FR Doc. 2010–13484 Filed 6–3–10; 8:45 am]

BILLING CODE 4140–01–P

DEPARTMENT OF HEALTH AND HUMAN SERVICES

National Institutes of Health

Center for Scientific Review; Notice of Closed Meetings

Pursuant to section 10(d) of the Federal Advisory Committee Act, as amended (5 U.S.C. App.), notice is hereby given of the following meetings.

The meetings will be closed to the public in accordance with the provisions set forth in sections 552b(c)(4) and 552b(c)(6), Title 5 U.S.C., as amended. The grant applications and the discussions could disclose confidential trade secrets or commercial property such as patentable material, and personal information concerning individuals associated with the grant applications, the disclosure of which would constitute a clearly unwarranted invasion of personal privacy.

Name of Committee: Center for Scientific Review Special Emphasis Panel; ARRA: AIDS and Related Research Competitive Revisions.

Date: June 17, 2010.

Time: 4 p.m. to 7 p.m.

Agenda: To review and evaluate grant applications.

Place: National Institutes of Health, 6701 Rockledge Drive, Bethesda, MD 20892 (Telephone Conference Call).

Contact Person: Mark P. Rubert, PhD, Scientific Review Officer, Center for Scientific Review, National Institutes of Health, 6701 Rockledge Drive, Room 5218, MSC 7852, Bethesda, MD 20892, 301–435–1775, *rubertm@csr.nih.gov.*

This notice is being published less than 15 days prior to the meeting due to the timing limitations imposed by the review and funding cycle.

Name of Committee: Center for Scientific Review Special Emphasis Panel; Tooth Development, Mobility and Mineralization.

Date: June 23, 2010.

Time: 1 p.m. to 4 p.m.

Agenda: To review and evaluate grant applications.

Place: National Institutes of Health, 6701 Rockledge Drive, Bethesda, MD 20892 (Telephone Conference Call).

Contact Person: Priscilla B. Chen, PhD, Scientific Review Officer, Center for Scientific Review, National Institutes of Health, 6701 Rockledge Drive, Room 4104, MSC 7814, Bethesda, MD 20892, (301) 435–1787, *chenp@csr.nih.gov.*

(Catalogue of Federal Domestic Assistance Program Nos. 93.306, Comparative Medicine; 93.333, Clinical Research, 93.306, 93.333, 93.337, 93.393–93.396, 93.837–93.844, 93.846–93.878, 93.892, 93.893, National Institutes of Health, HHS)

Dated: June 2, 2010.

Jennifer Spaeth,

Director, Office of Federal Advisory Committee Policy.

[FR Doc. 2010–13453 Filed 6–3–10; 8:45 am]

BILLING CODE 4140–01–P

DEPARTMENT OF HEALTH AND HUMAN SERVICES

National Institutes of Health

National Cancer Institute; Amended Notice of Meeting

Notice is hereby given of a change in the meeting of the National Cancer Advisory Board, June 21, 2010, 6:30 p.m. to June 23, 2010, 12 p.m., National Institutes of Health, Building 31, 31 Center Drive, Bethesda, MD 20892 which was published in the **Federal Register** on May 11, 2010, FR 26267–26268.

This **Federal Register** Notice is being amended to change the date, times, and location of the meeting of the Ad Hoc Subcommittee on Experimental Therapeutics to June 22, 2010 from 12 p.m. to 1 p.m. at the National Institutes of Health, Building 31, 31 Center Drive, Conference Room 7, Bethesda, MD 20892 and to add the meeting of the Subcommittee on Clinical Investigations to June 21, 2010 from 6 p.m. to 7:30 p.m. at Embassy Suites, Chevy Chase Pavilion, 4300 Military Road, NW., Washington, DC 20015.

Dated: May 28, 2010.

Jennifer Spaeth,

Director, Office of Federal Advisory Committee Policy.

[FR Doc. 2010–13451 Filed 6–3–10; 8:45 am]

BILLING CODE 4140–01–P

DEPARTMENT OF HEALTH AND HUMAN SERVICES

National Institutes of Health

National Heart, Lung, and Blood Institute; Notice of Closed Meetings

Pursuant to section 10(d) of the Federal Advisory Committee Act, as amended (5 U.S.C. App.), notice is hereby given of the following meetings.

The meetings will be closed to the public in accordance with the provisions set forth in sections 552b(c)(4) and 552b(c)(6), Title 5 U.S.C., as amended. The grant applications and the discussions could disclose confidential trade secrets or commercial property such as patentable material, and personal information concerning individuals associated with the grant applications, the disclosure of which would constitute a clearly unwarranted invasion of personal privacy.

Name of Committee: National Heart, Lung, and Blood Institute Special Emphasis Panel, Coordination Core for Programs to Increase Diversity Among Individuals Engaged in Health-Related Research (PRIDE).

Date: June 16, 2010.

Time: 2 p.m. to 5 p.m.

Agenda: To review and evaluate grant applications.

Place: Hyatt Regency Bethesda, One Bethesda Metro Center, 7400 Wisconsin Avenue, Bethesda, MD 20814.

Contact Person: Stephanie J Webb, PhD, Scientific Review Officer, Review Branch/DERA, National Heart, Lung, and Blood Institute, 6701 Rockledge Drive, Room 7196, Bethesda, MD 20892, 301–435–0291, *stephanie.webb@nih.gov.*

Name of Committee: National Heart, Lung, and Blood Institute Special Emphasis Panel, Atherosclerosis Risk in Communities (ARIC) Study—Field Centers.

Date: June 24, 2010.

Time: 1:30 p.m. to 3:30 p.m.

Agenda: To review and evaluate contract proposals.

Place: National Institutes of Health, 6701 Rockledge Drive, Bethesda, MD 20892 (Telephone Conference Call).

Contact Person: Tony L Creazzo, PhD, Scientific Review Officer, Review Branch/DERA, National Heart, Lung, and Blood Institute, 6701 Rockledge Drive, Room 7180, Bethesda, MD 20892–7924, 301–435–0725, *creazzot@mail.nih.gov.*

Name of Committee: National Heart, Lung, and Blood Institute Special Emphasis Panel, Atherosclerosis Risk in Communities (ARIC) Study—Central Laboratory Center.

Date: June 24, 2010.

Time: 3:30 p.m. to 5 p.m.

Agenda: To review and evaluate contract proposals.

Place: National Institutes of Health, 6701 Rockledge Drive, Bethesda, MD 20892 (Telephone Conference Call).

Contact Person: Tony L Creazzo, PhD, Scientific Review Officer, Review Branch/

DERA, National Heart, Lung, and Blood Institute, 6701 Rockledge Drive, Room 7180, Bethesda, MD 20892–7924, 301–435–0725, *creazzot@mail.nih.gov.*

Name of Committee: National Heart, Lung, and Blood Institute Special Emphasis Panel, Atherosclerosis Risk in Communities (ARIC) Study—Coordinating Center.

Date: June 24, 2010.

Time: 12:30 p.m. to 1:30 p.m.

Agenda: To review and evaluate contract proposals.

Place: National Institutes of Health, 6701 Rockledge Drive, Bethesda, MD 20892 (Telephone Conference Call).

Contact Person: Tony L Creazzo, PhD, Scientific Review Officer, Review Branch/DERA, National Heart, Lung, and Blood Institute, 6701 Rockledge Drive, Room 7180, Bethesda, MD 20892–7924, 301–435–0725, *creazzot@mail.nih.gov.*

Name of Committee: National Heart, Lung, and Blood Institute Special Emphasis Panel, Strong Heart Study Research Projects.

Date: June 30, 2010.

Time: 10 a.m. to 1 p.m.

Agenda: To review and evaluate grant applications.

Place: National Institutes of Health, 6701 Rockledge Drive, Bethesda, MD 20892 (Telephone Conference Call).

Contact Person: Katherine M. Malinda, PhD, Scientific Review Officer, Review Branch/DERA, National Heart, Lung, and Blood Institute, 6701 Rockledge Drive, Room 7198, Bethesda, MD 20892–7924, 301–435–0297, *malindakm@nhlbi.nih.gov.*

(Catalogue of Federal Domestic Assistance Program Nos. 93.233, National Center for Sleep Disorders Research; 93.837, Heart and Vascular Diseases Research; 93.838, Lung Diseases Research; 93.839, Blood Diseases and Resources Research, National Institutes of Health, HHS)

Dated: May 26, 2010.

Jennifer Spaeth,

Director, Office of Federal Advisory Committee Policy.

[FR Doc. 2010–13489 Filed 6–3–10; 8:45 am]

BILLING CODE 4140–01–P

DEPARTMENT OF HEALTH AND HUMAN SERVICES

National Institutes of Health

Center for Scientific Review; Notice of Closed Meetings

Pursuant to section 10(d) of the Federal Advisory Committee Act, as amended (5 U.S.C. App.), notice is hereby given of the following meetings.

The meetings will be closed to the public in accordance with the provisions set forth in sections 552b(c)(4) and 552b(c)(6), Title 5 U.S.C., as amended. The grant applications and the discussions could disclose confidential trade secrets or commercial property such as patentable material, and personal information concerning individuals associated with the grant applications, the disclosure of which would constitute a clearly unwarranted invasion of personal privacy.

Name of Committee: Center for Scientific Review Special Emphasis Panel; Member Conflict: Neurosensory.

Date: June 16–17, 2010.

Time: 7 a.m. to 5 p.m.

Agenda: To review and evaluate grant applications.

Place: National Institutes of Health, 6701 Rockledge Drive, Bethesda, MD 20892 (Virtual Meeting).

Contact Person: Bernard F. Driscoll, PhD, Scientific Review Officer, Center for Scientific Review, National Institutes of Health, 6701 Rockledge Drive, Room 5184, MSC 7844, Bethesda, MD 20892, (301) 435–1242, *driscolb@csr.nih.gov.*

This notice is being published less than 15 days prior to the meeting due to the timing limitations imposed by the review and funding cycle.

Name of Committee: Center for Scientific Review Special Emphasis Panel; Cardiovascular Devices.

Date: June 21, 2010.

Time: 8 a.m. to 5 p.m.

Agenda: To review and evaluate grant applications.

Place: Hyatt Regency Bethesda, One Bethesda Metro Center, 7400 Wisconsin Avenue, Bethesda, MD 20814.

Contact Person: Roberto J. Matus, MD, Scientific Review Officer, Center for Scientific Review, National Institutes of Health, 6701 Rockledge Drive, Room 5108, MSC 7854, Bethesda, MD 20892, 301–435–2204, *matusr@csr.nih.gov.*

Name of Committee: Center for Scientific Review Special Emphasis Panel; Member Conflict: Addiction, Mental Health and Auditory Processes.

Date: June 22–23, 2010.

Time: 7 a.m. to 5 p.m.

Agenda: To review and evaluate grant applications.

Place: National Institutes of Health, 6701 Rockledge Drive, Bethesda, MD 20892 (Virtual Meeting).

Contact Person: Brian Hoshaw, PhD, Scientific Review Officer, Center for Scientific Review, National Institutes of Health, 6701 Rockledge Drive, Room 5181, MSC 7844, Bethesda, MD 20892, 301–435–1033, *hoshawb@csr.nih.gov.*

Name of Committee: Center for Scientific Review Special Emphasis Panel; Bioengineering Research Partnerships and Imaging Member Conflicts.

Date: June 22, 2010.

Time: 8 a.m. to 5 p.m.

Agenda: To review and evaluate grant applications.

Place: Hyatt Regency Bethesda, One Bethesda Metro Center, 7400 Wisconsin Avenue, Bethesda, MD 20814.

Contact Person: John Firrell, PhD, Scientific Review Officer, Center for Scientific Review, National Institutes of Health, 6701 Rockledge Drive, Room 5213, MSC 7854, Bethesda, MD 20892, 301–435–2598, *firrellj@csr.nih.gov.*

Name of Committee: Center for Scientific Review Special Emphasis Panel; PAR–10–018: Accelerating the Pace of Drug Abuse Research Using Existing Epidemiology, Prevention, and Treatment Research Data.

Date: June 22, 2010.

Time: 8 a.m. to 4 p.m.

Agenda: To review and evaluate grant applications.

Place: Embassy Suites at the Chevy Chase Pavilion, 4300 Military Road, NW., Washington, DC 20015.

Contact Person: Bob Weller, PhD, Scientific Review Officer, Center for Scientific Review, National Institutes of Health, 6701 Rockledge Drive, Room 3160, MSC 7770, Bethesda, MD 20892, (301) 435–0694, *wellerr@csr.nih.gov.*

Name of Committee: Center for Scientific Review Special Emphasis Panel; Xenobiotic and Nutrient Disposition and Action and Hepatobiliary Pathophysiology.

Date: June 22–23, 2010.

Time: 8 a.m. to 4 p.m.

Agenda: To review and evaluate grant applications.

Place: National Institutes of Health, 6701 Rockledge Drive, Bethesda, MD 20892 (Virtual Meeting).

Contact Person: Peter J. Perrin, PhD, Scientific Review Officer, Center for Scientific Review, National Institutes of Health, 6701 Rockledge Drive, Room 2180, MSC 7818, Bethesda, MD 20892, (301) 435–0682, *perrinp@csr.nih.gov.*

Name of Committee: Center for Scientific Review Special Emphasis Panel; Small Business: Neuropharmacology.

Date: June 24–25, 2010.

Time: 7 a.m. to 5 p.m.

Agenda: To review and evaluate grant applications.

Place: Marriott Wardman Park, 2660 Woodley Road, NW., Washington, DC 20008.

Contact Person: Aidan Hampson, PhD, Scientific Review Officer, Center for Scientific Review, National Institutes of Health, 6701 Rockledge Drive, Room 5199, MSC 7850, Bethesda, MD 20892, (301) 435–0634, *hampsona@csr.nih.gov.*

Name of Committee: Center for Scientific Review Special Emphasis Panel; Fellowships: Behavioral Neuroscience.

Date: June 24–25, 2010.

Time: 8 a.m. to 5 p.m.

Agenda: To review and evaluate grant applications.

Place: Washington Plaza Hotel, 10 Thomas Circle, NW., Washington, DC 20005.

Contact Person: Kristin Kramer, PhD, Scientific Review Officer, Center for Scientific Review, National Institutes of Health, 6701 Rockledge Drive, Room 5205, MSC 7846, Bethesda, MD 20892, (301) 437–0911, *kramerkm@csr.nih.gov.*

Name of Committee: Center for Scientific Review Special Emphasis Panel; Fellowships: Brain Disorders and Related Neuroscience.

Date: June 24–25, 2010.

Time: 8 a.m. to 5 p.m.

Agenda: To review and evaluate grant applications.

Place: Bethesda North Marriott Hotel & Conference Center, 5701 Marinelli Road, Bethesda, MD 20852.

Contact Person: Yvonne Bennett, PhD, Scientific Review Officer, Center for Scientific Review, National Institutes of Health, 6701 Rockledge Drive, Room 5199, MSC 7846, Bethesda, MD 20892, 301–435–1121, *bennetty@csr.nih.gov.*

Name of Committee: Center for Scientific Review Special Emphasis Panel; Small Business: Healthcare Delivery and Methodologies.

Date: June 24–25, 2010.

Time: 8 a.m. to 5 p.m.

Agenda: To review and evaluate grant applications.

Place: Hotel Rex, 562 Sutter Street, San Francisco, CA 94102.

Contact Person: Delia Olufokunbi Sam, PhD, Scientific Review Officer, Center for Scientific Review, National Institutes of Health, 6701 Rockledge Drive, Room 3158, MSC 7770, Bethesda, MD 20892, 301–435–0684, *olufokunbisamd@csr.nih.gov.*

Name of Committee: Center for Scientific Review Special Emphasis Panel; Fellowship: Chemical and Bioanalytical Sciences.

Date: June 24, 2010.

Time: 8 a.m. to 6 p.m.

Agenda: To review and evaluate grant applications.

Place: Doubletree Hotel Bethesda, 8120 Wisconsin Avenue, Bethesda, MD 20814.

Contact Person: Denise Beusen, PhD, Scientific Review Officer, Center for Scientific Review, National Institutes of Health, 6701 Rockledge Drive, Room 4142, MSC 7806, Bethesda, MD 20892, (301) 435–1267, *beusend@csr.nih.gov.*

Name of Committee: Center for Scientific Review Special Emphasis Panel; Small Business: Clinical Neurophysiology, Devices, Auditory Devices and Neuroprosthesis.

Date: June 24–25, 2010.

Time: 8 a.m. to 5 p.m.

Agenda: To review and evaluate grant applications.

Place: Hilton Long Beach & Executive Meeting Center, 701 West Ocean Boulevard, Long Beach, CA 20831.

Contact Person: Keith Crutcher, PhD, Scientific Review Officer, Center for Scientific Review, National Institutes of Health, 6701 Rockledge Drive, Room 5207, MSC 7846, Bethesda, MD 20892, 301–435–1278, *crutcherka@csr.nih.gov.*

Name of Committee: Center for Scientific Review Special Emphasis Panel; Small Business: Molecular, Cellular and Developmental Neurobiological.

Date: June 24, 2010.

Time: 8 a.m. to 5 p.m.

Agenda: To review and evaluate grant applications.

Place: Hotel Monticello, 1075 Thomas Jefferson Street, NW., Washington, DC 20007.

Contact Person: Eugene Carstea, PhD, Scientific Review Officer, Center for Scientific Review, National Institutes of Health, 6701 Rockledge Drive, Room 5194, MSC 7846, Bethesda, MD 20892, (301) 408–9756, *carsteae@csr.nih.gov.*

Name of Committee: Center for Scientific Review Special Emphasis Panel; Special Topics: Social Science and Population Studies.

Date: June 24–25, 2010.

Time: 8:30 a.m. to 3 p.m.

Agenda: To review and evaluate grant applications.

Place: One Washington Circle Hotel, One Washington Circle, NW., Washington, DC 20037.

Contact Person: Suzanne Ryan, PhD, Scientific Review Officer, Center for Scientific Review, National Institutes of Health, 6701 Rockledge Drive, Room 3139, Bethesda, MD 20892, (301) 435–1712, *ryansj@csr.nih.gov.*

Name of Committee: Center for Scientific Review Special Emphasis Panel; Member Conflict: Topics in Aging.

Date: June 24, 2010.

Time: 1 p.m. to 4 p.m.

Agenda: To review and evaluate grant applications.

Place: National Institutes of Health, 6701 Rockledge Drive, Bethesda, MD 20892 (Telephone Conference Call).

Contact Person: John Burch, PhD, Scientific Review Officer, Center for Scientific Review, National Institute of Health, 6701 Rockledge Drive, Room 3213, MSC 7808, Bethesda, MD 20892, 301–408–9519, *burchjb@csr.nih.gov.*

Name of Committee: Center for Scientific Review Special Emphasis Panel; BMIT/CMIP/MEDI Imaging Applications.

Date: June 24, 2010.

Time: 12:30 p.m. to 4 p.m.

Agenda: To review and evaluate grant applications.

Place: National Institutes of Health, 6701 Rockledge Drive, Bethesda, MD 20892 (Virtual Meeting).

Contact Person: Weihua Luo, MD, PhD, Scientific Review Officer, Center for Scientific Review, National Institutes of Health, 6701 Rockledge Drive, Room 5114, MSC 7854, Bethesda, MD 20892, (301) 435–1170, *luow@csr.nih.gov.*

(Catalogue of Federal Domestic Assistance Program Nos. 93.306, Comparative Medicine; 93.333, Clinical Research, 93.306, 93.333, 93.337, 93.393–93.396, 93.837–93.844, 93.846–93.878, 93.892, 93.893, National Institutes of Health, HHS)

Dated: May 26, 2010.

Jennifer Spaeth,

Director, Office of Federal Advisory Committee Policy.

[FR Doc. 2010–13488 Filed 6–3–10; 8:45 am]

BILLING CODE 4140–01–P

DEPARTMENT OF HEALTH AND HUMAN SERVICES

National Institutes of Health

Center for Scientific Review; Notice of Closed Meetings

Pursuant to section 10(d) of the Federal Advisory Committee Act, as amended (5 U.S.C. App.), notice is hereby given of the following meetings.

The meetings will be closed to the public in accordance with the provisions set forth in sections 552b(c)(4) and 552b(c)(6), Title 5 U.S.C., as amended. The grant applications and the discussions could disclose confidential trade secrets or commercial property such as patentable material, and personal information concerning individuals associated with the grant applications, the disclosure of which would constitute a clearly unwarranted invasion of personal privacy.

Name of Committee: Center for Scientific Review Special Emphasis Panel, ARRA: Pathophysiological Basis of Mental Disorders and Addictions II Competitive Revisions.

Date: June 22, 2010.

Time: 1 p.m. to 3 p.m.

Agenda: To review and evaluate grant applications.

Place: National Institutes of Health, 6701 Rockledge Drive, Bethesda, MD 20892 (Telephone Conference Call.)

Contact Person: Samuel C. Edwards, PhD, Chief, Center for Scientific Review, National Institutes of Health, 6701 Rockledge Drive, Room 5210, MSC 7846, Bethesda, MD 20892. (301) 435–1246. *edwardss@csr.nih.gov.*

Name of Committee: Center for Scientific Review Special Emphasis Panel, ARRA Healthcare Delivery and Methodology Small Business Competitive Revision.

Date: June 25, 2010.

Time: 8 a.m. to 5 p.m.

Agenda: To review and evaluate grant applications.

Place: Hotel Rex, 562 Sutter Street, San Francisco, CA 94102.

Contact Person: Delia Olufokunbi Sam, PhD, Scientific Review Officer, Center for Scientific Review, National Institutes of Health, 6701 Rockledge Drive, Room 3158, MSC 7770, Bethesda, MD 20892. 301–435–0684. *olufokunbisamd@csr.nih.gov.*

Name of Committee: Center for Scientific Review Special Emphasis Panel, Advanced Neural Prosthetics.

Date: June 25, 2010.

Time: 8 a.m. to 5 p.m.

Agenda: To review and evaluate grant applications.

Place: Hilton Long Beach and Executive Meeting Center, 701 West Ocean Boulevard, Long Beach, CA 90831.

Contact Person: Keith Crutcher, PhD, Scientific Review Officer, Center for Scientific Review, National Institutes of Health, 6701 Rockledge Drive, Room 5207, MSC 7846, Bethesda, MD 20892. 301–435–1278. *crutcherka@csr.nih.gov.*

Name of Committee: Center for Scientific Review Special Emphasis Panel, Social Science and Population Studies Revision Applications.

Date: June 25, 2010.

Time: 9 a.m. to 12 p.m.

Agenda: To review and evaluate grant applications.

Place: One Washington Circle Hotel, One Washington Circle, NW., Washington, DC 20037.

Contact Person: Suzanne Ryan, PhD, Scientific Review Officer, Center for Scientific Review, National Institutes of Health, 6701 Rockledge Drive, Room 3139, Bethesda, MD 20892. (301) 435–1712. *ryansj@csr.nih.gov.*

Name of Committee: Center for Scientific Review Special Emphasis Panel, ARRA: Neuropharmacology Competitive Revisions.
Date: June 25, 2010.
Time: 1 p.m. to 5 p.m.
Agenda: To review and evaluate grant applications.
Place: Marriott Wardman Park, 2660 Woodley Road, NW., Washington, DC 20008.
Contact Person: Aidan Hampson, PhD, Scientific Review Officer, Center for Scientific Review, National Institutes of Health, 6701 Rockledge Drive, Room 5199, MSC 7850, Bethesda, MD 20892. (301) 435–0634. *hampsona@csr.nih.gov.*

Name of Committee: Center for Scientific Review Special Emphasis Panel, Member Conflicts: Cognition and Perception.
Date: June 25, 2010.
Time: 1 p.m. to 3 p.m.
Agenda: To review and evaluate grant applications.
Place: National Institutes of Health, 6701 Rockledge Drive, Bethesda, MD 20892 (Virtual Meeting).
Contact Person: Weijia Ni, PhD, Scientific Review Officer, Center for Scientific Review, National Institutes of Health, 6701 Rockledge Drive, Room 3190, MSC 7848 (for overnight mail use room # and 20817 zip), Bethesda, MD 20892. (301) 435–1507. *niw@csr.nih.gov.*

Name of Committee: Center for Scientific Review Special Emphasis Panel, ARRA: Risk Prevention and Health Behavior Across the Lifespan Competitive Revisions.
Date: June 25, 2010.
Time: 4 p.m. to 5 p.m.
Agenda: To review and evaluate grant applications.
Place: Pier 5 Hotel, 711 Eastern Avenue, Baltimore, MD 21202.
Contact Person: Claire E. Gutkin, PhD, MPH, Scientific Review Officer, Center for Scientific Review, National Institutes of Health, 6701 Rockledge Drive, Room 3138, MSC 7759, Bethesda, MD 20892. 301–594–3139. *gutkincl@csr.nih.gov.*

Name of Committee: Center for Scientific Review Special Emphasis Panel, Member Conflict: Member Application Special Emphasis Panel.
Date: June 25, 2010.
Time: 12 p.m. to 5 p.m.
Agenda: To review and evaluate grant applications.
Place: National Institutes of Health, 6701 Rockledge Drive, Bethesda, MD 20892 (Virtual Meeting).
Contact Person: Bob Weller, PhD, Scientific Review Officer, Center for Scientific Review, National Institutes of Health, 6701 Rockledge Drive, Room 3160, MSC 7770, Bethesda, MD 20892. (301) 435–0694. *wellerr@csr.nih.gov.*

(Catalogue of Federal Domestic Assistance Program Nos. 93.306, Comparative Medicine; 93.333, Clinical Research, 93.306, 93.333, 93.337, 93.393–93.396, 93.837–93.844, 93.846–93.878, 93.892, 93.893, National Institutes of Health, HHS)

Dated: May 26, 2010.

Jennifer Spaeth,

Director, Office of Federal Advisory Committee Policy.

[FR Doc. 2010–13487 Filed 6–3–10; 8:45 am]

BILLING CODE 4140–01–P

DEPARTMENT OF HEALTH AND HUMAN SERVICES

National Institutes of Health

Center for Scientific Review; Notice of Closed Meeting

Pursuant to section 10(d) of the Federal Advisory Committee Act, as amended (5 U.S.C. App.), notice is hereby given of the following meeting.

The meeting will be closed to the public in accordance with the provisions set forth in sections 552b(c)(4) and 552b(c)(6), Title 5 U.S.C., as amended. The grant applications and the discussions could disclose confidential trade secrets or commercial property such as patentable material, and personal information concerning individuals associated with the grant applications, the disclosure of which would constitute a clearly unwarranted invasion of personal privacy.

Name of Committee: Center for Scientific Review Special Emphasis Panel, Member Conflict: Cardiac Conduction System, Calcium Release and Arrhythmia.
Date: June 9, 2010.
Time: 10:30 a.m. to 12:30 p.m.
Agenda: To review and evaluate grant applications.
Place: National Institutes of Health, 6701 Rockledge Drive, Bethesda, MD 20892 (Telephone Conference Call).
Contact Person: Olga A. Tjurmina, PhD, Scientific Review Officer, Center for Scientific Review, National Institutes of Health, 6701 Rockledge Drive, Room 4138, MSC 7814, Bethesda, MD 20892. (301) 451–1375. *ot3d@nih.gov.*

This notice is being published less than 15 days prior to the meeting due to the timing limitations imposed by the review and funding cycle.

(Catalogue of Federal Domestic Assistance Program Nos. 93.306, Comparative Medicine; 93.333, Clinical Research, 93.306, 93.333, 93.337, 93.393–93.396, 93.837–93.844, 93.846–93.878, 93.892, 93.893, National Institutes of Health, HHS)

Dated: May 26, 2010.

Jennifer Spaeth,

Director, Office of Federal Advisory Committee Policy.

[FR Doc. 2010–13486 Filed 6–3–10; 8:45 am]

BILLING CODE 4140–01–P

DEPARTMENT OF HEALTH AND HUMAN SERVICES

National Institutes of Health

Eunice Kennedy Shriver National Institute of Child Health & Human Development; Notice of Closed Meeting

Pursuant to section 10(d) of the Federal Advisory Committee Act, as amended (5 U.S.C. App.), notice is hereby given of the following meeting.

The meeting will be closed to the public in accordance with the provisions set forth in sections 552b(c)(4) and 552b(c)(6), Title 5 U.S.C., as amended. The grant applications and the discussions could disclose confidential trade secrets or commercial property such as patentable material, and personal information concerning individuals associated with the grant applications, the disclosure of which would constitute a clearly unwarranted invasion of personal privacy.

Name of Committee: National Institute of Child Health and Human Development Initial Review Group; Pediatrics Subcommittee.
Date: June 24, 2010.
Time: 8:30 a.m. to 5 p.m.
Agenda: To review and evaluate grant applications.
Place: Legacy Hotel and Meeting Center, 1775 Rockville Pike, Rockville, MD 20852.
Contact Person: Rita Anand, PhD, Scientific Review Administrator, Division of Scientific Review, Eunice Kennedy Shriver National Institute of Child Health and Human Development, NIH, 6100 Executive Blvd., Room 5B01, Bethesda, MD 20892, 301–496–1487, *anandr@mail.nih.gov.*

(Catalogue of Federal Domestic Assistance Program Nos. 93.864, Population Research; 93.865, Research for Mothers and Children; 93.929, Center for Medical Rehabilitation Research; 93.209, Contraception and Infertility Loan Repayment Program, National Institutes of Health, HHS)

Dated: May 26, 2010.

Jennifer Spaeth,

Director, Office of Federal Advisory Committee Policy.

[FR Doc. 2010–13483 Filed 6–3–10; 8:45 am]

BILLING CODE 4140–01–P

DEPARTMENT OF HEALTH AND HUMAN SERVICES

National Institutes of Health

National Institute of Mental Health; Notice of Closed Meeting

Pursuant to section 10(d) of the Federal Advisory Committee Act, as amended (5 U.S.C. App), notice is hereby given of the following meeting.

The meeting will be closed to the public in accordance with the

provisions set forth in sections 552b(c)(4) and 552b(c)(6), Title 5 U.S.C., as amended. The grant applications and the discussions could disclose confidential trade secrets or commercial property such as patentable materials, and personal information concerning individuals associated with the grant applications, the disclosure of which would constitute a clearly unwarranted invasion of personal privacy.

Name of Committee: National Institute of Mental Health Special Emphasis Panel; Fellowships and Dissertations.

Date: July 13, 2010.

Time: 1 p.m. to 3:30 p.m.

Agenda: To review and evaluate grant applications.

Place: National Institutes of Health, Neuroscience Center, 6001 Executive Boulevard, Rockville, MD 20852 (Telephone Conference Call).

Contact Person: Serena P. Chu, PhD, Scientific Review Officer, Division of Extramural Activities, National Institute of Mental Health, NIH, Neuroscience Center, 6001 Executive Blvd., Room 6154, MSC 9609, Bethesda, MD 20892–9609, 301–443–0004, *sechu@mail.nih.gov.*

(Catalogue of Federal Domestic Assistance Program Nos. 93.242, Mental Health Research Grants; 93.281, Scientist Development Award, Scientist Development Award for Clinicians, and Research Scientist Award; 93.282, Mental Health National Research Service Awards for Research Training, National Institutes of Health, HHS)

Dated: May 27, 2010.

Jennifer Spaeth,

Director, Office of Federal Advisory Committee Policy.

[FR Doc. 2010–13413 Filed 6–3–10; 8:45 am]

BILLING CODE 4140–01–P

DEPARTMENT OF HEALTH AND HUMAN SERVICES

National Institutes of Health

Eunice Kennedy Shriver National Institute of Child Health & Human Development; Notice of Closed Meeting

Pursuant to section 10(d) of the Federal Advisory Committee Act, as amended (5 U.S.C. App.), notice is hereby given of the following meeting.

The meeting will be closed to the public in accordance with the provisions set forth in sections 552b(c)(4) and 552b(c)(6), Title 5 U.S.C., as amended. The grant applications and the discussions could disclose confidential trade secrets or commercial property such as patentable material, and personal information concerning individuals associated with the grant applications, the disclosure of which would constitute a clearly unwarranted invasion of personal privacy.

Name of Committee: National Institute of Child Health and Human Development Special Emphasis Panel; Race-Based Social Stress and Health in the MADICS Longitudinal Study, University of Michigan at Ann Arbor.

Date: June 25, 2010.

Time: 8 a.m. to 5 p.m.

Agenda: To review and evaluate grant applications.

Place: Embassy Suites at the Chevy Chase Pavilion, 4300 Military Road, NW., Washington, DC 20015.

Contact Person: Michele C. Hindi-Alexander, PhD, Division of Scientific Review, National Institutes of Health, Eunice Kennedy Shriver National Institute of Child Health and Human Development, 1600 Executive Boulevard, Rm. 5B01, Bethesda, MD 20892, (301) 435–8382, *hindialm@mail.nih.gov.*

(Catalogue of Federal Domestic Assistance Program Nos. 93.864, Population Research; 93.865, Research for Mothers and Children; 93.929, Center for Medical Rehabilitation Research; 93.209, Contraception and Infertility Loan Repayment Program, National Institutes of Health, HHS)

Dated: May 27, 2010.

Jennifer Spaeth,

Director, Office of Federal Advisory Committee Policy.

[FR Doc. 2010–13414 Filed 6–3–10; 8:45 am]

BILLING CODE 4140–01–P

DEPARTMENT OF HEALTH AND HUMAN SERVICES

Food and Drug Administration

[Docket No. FDA–2010–N–0215]

Substances Generally Recognized as Safe Added to Food for Animals; Notice of Pilot Program

AGENCY: Food and Drug Administration, HHS.

ACTION: Notice.

SUMMARY: The Food and Drug Administration (FDA) is seeking participants for a voluntary pilot program whereby persons submit to FDA notices of claims that a particular use of a substance in food for animals is exempt from the statutory premarket approval requirements based on the notifier's determination that such use is generally recognized as safe (GRAS). FDA intends to evaluate these notices and will inform each participant (notifier) in writing either that the notice provides a sufficient basis for the GRAS determination or that FDA has identified questions as to whether the intended use of the substance is GRAS.

DATES: Submit written requests to participate in the pilot program beginning June 4, 2010.

ADDRESSES: Submit written requests to participate in the pilot program to the Division of Animal Feeds (HFV–224), Center for Veterinary Medicine, Food and Drug Administration, 7519 Standish Pl., Rockville, MD 20855.

FOR FURTHER INFORMATION CONTACT: Geoffrey K. Wong, Center for Veterinary Medicine (HFV–224), Food and Drug Administration, 7519 Standish Pl., Rockville, MD 20855, 240–453–6879, *Geoffrey.wong@fda.hhs.gov.*

SUPPLEMENTARY INFORMATION:

I. Background

A. The 1958 Amendment

In 1958, in response to public concern about the increased use of chemicals in foods and food processing, Congress enacted the Food Additives Amendment (the 1958 amendment) to the Federal Food, Drug, and Cosmetic Act (the act). The 1958 amendment required that, before a new additive could be used in food, its producer must demonstrate the safety of the additive to FDA. The 1958 amendment defined the terms "food additive" (section 201(s) of the act (21 U.S.C. 321(s))) and "unsafe food additive" (section 409(a) of the act (21 U.S.C. 348(a))), established a premarket approval process for food additives (section 409(b) through (h)), and amended the food adulteration provisions of the act to deem adulterated any food that is, or bears or contains, any food additive that is unsafe within the meaning of section 409 (section 402(a)(2)(C) of the act (21 U.S.C. 342(a)(2)(C))).

In enacting the 1958 amendment, Congress recognized that many substances intentionally added to food would not require formal premarket review by FDA to assure their safety. Congress thus adopted, in section 201(s) of the act, a two-step definition of "food additive." The first step broadly includes any substance, the intended use of which results or may reasonably be expected to result, directly or indirectly, in its becoming a component or otherwise affecting the characteristics of food. The second step, however, excludes from the definition of "food additive" substances that are generally recognized, among experts qualified by scientific training and experience to evaluate their safety ("qualified experts"), as having been adequately shown through scientific procedures (or, in the case of a substance used in food prior to January 1, 1958, through either scientific procedures or through

experience based on common use in food) to be safe under the conditions of their intended use.

B. Elements of the GRAS Standard

Importantly, under section 201(s) of the act, it is the use of a substance, rather than the substance itself, that is eligible for the GRAS exemption. FDA has defined "safe" as a reasonable certainty in the minds of competent scientists that the substance is not harmful under its intended conditions of use (21 CFR 570.3(i)). Current § 570.30(b) (21 CFR 570.30(b)) provides that general recognition of safety based on scientific procedures requires the same quantity and quality of scientific evidence as is required to obtain approval of a food additive regulation for the substance. The requirement for scientific evidence of safety is referred to in this document as the "technical element" of safety. While a determination that a food additive is safe requires technical evidence of safety, a determination that a particular use of a substance is GRAS requires both technical evidence of safety and a basis to conclude that this technical element of safety is generally recognized. Such general recognition of safety requires common knowledge about the substance throughout the scientific community, so it is referred to in this document as the "common knowledge element" of the GRAS standard.

The common knowledge element of the GRAS standard includes two facets: (1) The data and information relied on to establish the technical element, which must be of the same kind and quality as is required to obtain FDA approval of the use of the substance, must be generally available and (2) there must be a basis to conclude that there is consensus among qualified experts about the safety of the substance for its intended use. (See *United States* v. *Western Serum Co., Inc.*, 666 F.2d 335, 338 (9th Cir. 1982); *United States* v. *Articles of Drug * * * Promise Toothpaste*, 624 F.Supp. 776, 778 (N.D. Ill. 1985), aff'd 826 F.2d 564 (7th Cir. 1987); *United States* v. *Articles of Drug * * * Hormonin*, 498 F.Supp.2d 424, 435 (D.N.J. 1980)). None of the facets by themselves are sufficient to satisfy the common knowledge element of the GRAS standard.

The usual mechanism to establish that scientific information is generally available is to show that the information is published in a peer-reviewed scientific journal. However, mechanisms to establish the basis for concluding that there is expert consensus about the safety of a substance are more varied. In some cases, publication in a peer-reviewed scientific journal of data (such as toxicity studies) on a substance has been used to establish expert consensus in addition to general availability. In other cases, such publication of data and information in the primary scientific literature has been supplemented by: (1) Publication of data and information in the secondary scientific literature, such as scientific review articles, textbooks, and compendia; (2) documentation of the opinion of an "expert panel" that is specifically convened for this purpose; or (3) the opinion or recommendation of an authoritative body such as the National Research Council of the National Academy of Sciences on a broad or specific issue that is related to a GRAS determination.

In this document, FDA is using the term "consensus" in discussing the common knowledge element of the GRAS standard. Such consensus does not require unanimity among qualified experts. (See *United States* v. *Articles of Drug * * * 5,906 Boxes*, 745 F.2d 105, 119 n. 22 (1st Cir. 1984); *United States* v. *An Article of Drug * * * 4,680 Pails*, 725 F.2d 976, 990 (5th Cir. 1984); *Coli-Trol 80, supra*, 518 F.2d at 746; *Promise Toothpaste, supra*, 624 F.Supp. at 782).

A substance used in food prior to January 1, 1958, may be shown to be GRAS for an intended use through scientific procedures or through experience based on common use in food. Current § 570.30(c) (21 CFR 570.30(c)) provides that general recognition of safety through experience based on common use in food prior to January 1, 1958, may be determined without the quantity or quality of scientific procedures required for approval of a food additive regulation. Current § 570.3(f) defines "common use in food" as a substantial history of consumption for food use by a significant number of animals in the United States.

C. History of FDA's Approach to the GRAS Exemption

Shortly after passage of the 1958 amendment, FDA clarified the regulatory status of a multitude of food substances that were used in food prior to 1958 and amended its regulations to include a list of food substances that, when used for the purposes indicated and in accordance with current good manufacturing practices, are GRAS. This GRAS list was incorporated into the agency's regulations as § 121.101(d) (now parts 182 and 582 (21 CFR parts 182 and 582)) (24 FR 9368, November 20, 1959). As part of that rulemaking, however, FDA acknowledged that it would be impracticable to list all substances that are GRAS for their intended use.

In 1970, FDA announced that it was undertaking a comprehensive agency review of substances listed as GRAS (35 FR 18623, December 8, 1970). In the notice announcing this review, FDA proposed criteria that could be used to establish whether these substances should continue to be listed as GRAS, become the subject of a food additive regulation, or become the subject of an interim food additive regulation pending completion of additional studies. These criteria were incorporated into the agency's regulations in 21 CFR 121.3 (precursor of current 21 CFR 570.30) (36 FR 12093, June 25, 1971). FDA subsequently codified procedures for the agency to affirm, on its own, the GRAS status of substances found to satisfy these criteria (§ 570.35(a) and (b) (21 CFR 570.35(a) and (b))). Because the GRAS review did not cover all GRAS substances (e.g., it did not cover many substances that were marketed based on a manufacturer's independent GRAS determination), that rulemaking included a mechanism (the GRAS petition process currently codified in § 570.35(c)) whereby an individual could petition FDA to review the GRAS status of substances (37 FR 25705, December 2, 1972).

D. The 1997 Proposed Rule

In the **Federal Register** of April 17, 1997 (62 FR 18938) (the 1997 proposed rule), FDA published a proposed rule that would replace this voluntary GRAS affirmation petition process in §§ 170.35(c) (21 CFR 170.35(c)) and 570.35(c) with a voluntary notification procedure whereby any person may notify FDA of a determination that a particular use of a substance in human food (proposed § 170.36) or in animal food (proposed § 570.36) is GRAS.

FDA tentatively concluded in the 1997 proposed rule that the proposed notification procedure has advantages over the current petition process because the resource-intensive rulemaking that is associated with a petition would be eliminated. This streamlining would allow FDA to redirect its resources to questions about GRAS status that are a priority with respect to public health protection. In addition, the proposed notice is simpler than a GRAS affirmation petition and therefore conceivably would provide an incentive for manufacturers to inform FDA of their GRAS determinations. This would result in increased agency awareness of the composition of the nation's food supply and the cumulative

dietary exposure to GRAS substances. FDA also tentatively concluded in the 1997 proposed rule that the public health would be better served if some resources that are currently directed to the GRAS petition process were redirected to the preparation of documents that would provide the industry with guidance on certain food safety issues for complex substances (e.g., macroingredients or biological polymers, such as proteins, carbohydrates, and fats and oils). Finally, FDA tentatively concluded that the reduction in resources devoted to the evaluation of GRAS substances would allow FDA to shift resources to its statutorily mandated task of reviewing food and color additive petitions (62 FR 18938 at 18941).

As part of the 1997 proposed rule, FDA announced an "interim policy" whereby interested persons could begin immediately to submit notifications of GRAS determinations (GRAS exemption claims) as described in proposed § 170.36(b) and (c) for substances used in human food. FDA stated that, in general, FDA would administer the notices as described in proposed § 170.36(d) through (f) (i.e., FDA would acknowledge receipt of the notice, respond in writing to the notifier, and make publicly accessible a copy of all GRAS determination claims and the agency's response). However, although FDA would make a good faith effort to respond within the proposed 90-day timeframe, the agency would not be bound by such a timeframe (62 FR 18938 at 18954).

As with the human food pilot program, the animal food pilot program, which will be administered by FDA's Center for Veterinary Medicine (CVM), will be based on the notification procedures announced in the 1997 proposed rule. Additionally, CVM has consulted with the Center for Food Safety and Applied Nutrition (CFSAN) and, where applicable, made its administrative procedures consistent with CFSAN's. Information about the CFSAN/GRAS notification program, including links to the 1997 proposed rule and relevant guidance documents, may be found at CFSAN's GRAS Web page: *http://www.fda.gov/Food/FoodIngredientsPackaging/GenerallyRecognizedasSafeGRAS/default.htm*.

II. Description of the CVM Pilot Program

FDA is implementing a voluntary pilot program to accept submission of notices of claims that a particular use of a substance in food for animals is exempt from the statutory premarket approval requirements based on the notifier's determination that such use is GRAS (notices of GRAS determination). FDA will accept notices of GRAS determination from all interested persons beginning immediately. However, FDA strongly encourages potential participants in the animal food pilot program to contact the Division of Animal Feeds (see **ADDRESSES**) prior to submitting notices to discuss their submission plans.

In general, the agency will implement the pilot program for substances added to animal food in the same manner as the interim policy for substances added to human food and as described in section VIII of the 1997 proposed rule (62 FR 18938 at 18954 through 18955). FDA invites interested persons who determine that a particular use of a substance in animal food is GRAS to notify FDA of such GRAS determination as described in section III of this document (see also proposed § 570.36(b) and (c) of the 1997 proposed rule.)

III. How to Participate in the Pilot

Any person may notify FDA of a claim that a particular use of a substance is exempt from the statutory premarket approval requirements based on the notifier's determination that such use is GRAS. Notifiers should submit triplicate copies of their notices of GRAS determination to the Division of Animal Feeds (HFV–224), Office of Surveillance and Compliance, Center for Veterinary Medicine, Food and Drug Administration, 7519 Standish Pl., Rockville, MD 20855. Notifiers should submit the following information:

- A claim, dated and signed by the notifier, or by the notifier's attorney or agent, or (if the notifier is a corporation) by an authorized official, that a particular use of a substance is exempt from the premarket approval requirements of the act because the notifier has determined that such use is GRAS. Such a claim should include:
  - The name and address of the notifier;
  - The common or usual name of the substance that is the subject of the GRAS determination claim (i.e., the "notified substance");
  - The applicable conditions of use of the notified substance, including the foods in which the substance is to be used, levels of use in such foods, and the purposes for which the substance is used, including, when appropriate, a description of the population (including the specific animal species) expected to consume the substance;
  - The basis for the GRAS determination (i.e., through scientific procedures or through experience based on common use in food); and
  - A statement that the data and information that are the basis for the notifier's GRAS determination are available for FDA's review and copying at reasonable times at a specific address set out in the notice and will be sent to FDA upon request.
- Detailed information about the identity of the notified substance, including, as applicable, its chemical name, Chemical Abstracts Service (CAS) Registry Number, Enzyme Commission number, empirical formula, structural formula, quantitative composition, method of manufacture (excluding any trade secrets and including, for substances of natural biological origin, source information such as genus and species), characteristic properties, any content of potential human or animal toxicants, and specifications for feed-grade material;
- Information on any self-limiting levels of use; and
- A detailed summary of the basis for the notifier's determination that a particular use of the notified substance is exempt from the premarket approval requirements of the act because such use is GRAS. Such determination may be based either on scientific procedures or on common use in food.
  - For a GRAS determination through scientific procedures, such summary should include:

—A comprehensive discussion of, and citations to, generally available and accepted scientific data, information, methods, or principles that the notifier relies on to establish safety, including a consideration of the probable consumption of the substance and the probable consumption of any substance formed in or on food because of its use and the cumulative effect of the substance in the diet, taking into account any chemically or pharmacologically related substances in such diet. Where a substance is intended for use in the food of an animal used to produce human food, this should include a comprehensive discussion of, and citations to, generally accepted scientific data, information, methods, or principles about both safety to the target animal and human food safety. The scientific data, information, methods, or principles provided should be sufficient to show that the substance is generally recognized among qualified experts to be safe for animals consuming food containing the substance as well as to humans consuming food derived from such animals (i.e., under its intended conditions of use);

—A comprehensive discussion of any reports of investigations or other information that may appear to be

inconsistent with the GRAS determination; and

—The basis for concluding, in light of the data and information submitted, that there is consensus among experts qualified by scientific training and experience to evaluate the safety of substances added to food that there is reasonable certainty that the substance is not harmful under the intended conditions of use.

○ For a GRAS determination through experience based on common use in food, such summary should include:

—A comprehensive discussion of, and citations to, generally available data and information that the notifier relies on to establish safety, including documented evidence of a substantial history of consumption of the substance by a significant number of animals. Where a substance is intended for use in the food of an animal used to produce human food, this should include a comprehensive discussion of, and citations to, generally accepted scientific data, information, methods, or principles about both safety to the target animal and human food safety. The scientific data, information, methods, or principles provided should be sufficient to show that the substance is generally recognized among qualified experts to be safe for animals consuming food containing the substance as well as to humans consuming food derived from such animals (i.e., under its intended conditions of use);

—A comprehensive discussion of any reports of investigations or other information that may appear to be inconsistent with the GRAS determination;

—The basis for concluding, in light of the data and information submitted, that there is consensus among experts qualified by scientific training and experience to evaluate the safety of substances added to food that there is reasonable certainty that the substance is not harmful under the intended conditions of use.

IV. How FDA Will Administer Notices Under the Pilot Program

In general, the agency will administer the notices under the pilot program as described in proposed § 570.36(d) through (f) of the 1997 proposed rule, as follows:

1. Within 30 days of receipt of the notice, FDA intends to acknowledge receipt of the notice by informing the notifier in writing.

2. Under the 1997 proposed rule, FDA would respond to the notifier in writing within 90 days of receipt of the notice either that the notice provides a sufficient basis for the GRAS determination or that FDA has identified questions as to whether the intended use of the substance is GRAS. Due to resource limitations in the animal food program, it is unlikely that CVM will be able to evaluate and respond to notices within the 90-day timeframe contained in the 1997 proposed rule. CVM will therefore respond to notifications of GRAS determinations in its pilot program as quickly as resources permit.

• Any GRAS determination claim submitted as part of the pilot program shall be immediately available for public disclosure on the date the notice is received. All remaining data and information in the notice shall be available for public disclosure, in accordance with 21 CFR part 20, on the date the notice is received.

• For each notice of GRAS determination submitted under the pilot program, the following information shall be readily accessible for public review and copying:

○ A copy of the submitted GRAS determination claim,

○ A copy of any letter issued by the agency, as described in paragraph 2 of this section.

○ A copy of any subsequent letter issued by the agency regarding such notice.

V. Paperwork Reduction Act of 1995

The collections of information in this notice are subject to review by the Office of Management and Budget (OMB) under the Paperwork Reduction Act of 1995 (44 U.S.C. 3501–3520), and have been previously approved by OMB. OMB originally approved Paperwork Reduction Act (PRA) burdens for GRAS notification under the 1997 proposed rule under OMB control number 0910–0342. The original OMB approval covered the collections of information in both proposed 21 CFR 170.36 and 570.36; however, only CFSAN operated a GRAS notification program for human food under the original OMB PRA approval. Extension of the original OMB PRA approval for GRAS notification was granted by OMB on August 24, 2009, under OMB control number 0910–0342.

As with the human food GRAS notification program administered by CFSAN, which has operated for several years, the animal food pilot program, which will be administered by CVM, will be based on the notification procedures announced in the 1997 proposed rule. The provisions for GRAS notification under proposed §§ 170.36 and 570.36 for human and animal food, respectively, are virtually identical and therefore the same number of hours per response were estimated for reporting (150 hours) and recordkeeping (15 hours per record) burdens for both proposed sections under the original and extended OMB PRA approvals. Because CFSAN's GRAS program has successfully operated under these PRA estimates for several years, FDA believes these burden estimates remain accurate for CVM's GRAS pilot program.

FDA's estimate of the annual number of GRAS determination notices that will be received by CVM in the extended OMB PRA approval (5) was revised downward from the original PRA approval (10). This revision was based on the actual number of GRAS notices received by CFSAN from 1998 to 2008, which was lower than anticipated and caused CFSAN to also revise downward its estimate in the extended PRA approval. The revised estimate in the extended PRA approval reflects FDA's best judgment at this time as to the number of notices CVM will receive annually through this pilot program.

CVM believes that the PRA estimates in the extended PRA approval cover CVM's GRAS notice program.

Dated: May 26, 2010.

Leslie Kux,

Acting Assistant Commissioner for Policy.

[FR Doc. 2010–13464 Filed 6–3–10; 8:45 am]

BILLING CODE 4160–01–S

DEPARTMENT OF HOMELAND SECURITY

U.S. Customs and Border Protection

Notice of Issuance of Final Determination Concerning a Lift Unit for an Overhead Patient Lift System

AGENCY: U.S. Customs and Border Protection, Department of Homeland Security.

ACTION: Notice of final determination.

SUMMARY: This document provides notice that U.S. Customs and Border Protection ("CBP") has issued a final determination concerning the country of origin of a lift unit for an overhead patient lift system. Based upon the facts presented, CBP has concluded in the final determination that Sweden is the country of origin of the lift unit for purposes of U.S. government procurement.

DATES: The final determination was issued on May 28, 2010. A copy of the final determination is attached. Any party-at-interest, as defined in 19 CFR 177.22(d), may seek judicial review of this final determination within July 6, 2010.

FOR FURTHER INFORMATION CONTACT: Heather K. Pinnock, Valuation and Special Programs Branch: (202) 325–0034.

SUPPLEMENTARY INFORMATION: Notice is hereby given that on 2010, pursuant to subpart B of part 177, Customs Regulations (19 CFR part 177, subpart B), CBP issued a final determination concerning the country of origin of the lift unit which may be offered to the U.S. Government under an undesignated government procurement contract. This final determination, in HQ H100055, was issued at the request of Hill-Rom Company, Inc., under procedures set forth at 19 CFR part 177, subpart B, which implements Title III of the Trade Agreements Act of 1979, as amended (19 U.S.C. 2511–18). In the final determination, CBP concluded that, based upon the facts presented, the lift unit, assembled in Sweden from parts made in a non-TAA country and in Sweden, is substantially transformed in Sweden, such that Sweden is the country of origin of the finished article for purposes of U.S. government procurement.

Section 177.29, Customs Regulations (19 CFR 177.29), provides that notice of final determinations shall be published in the **Federal Register** within 60 days of the date the final determination is issued. Section 177.30, CBP Regulations (19 CFR 177.30), provides that any party-at-interest, as defined in 19 CFR 177.22(d), may seek judicial review of a final determination within 30 days of publication of such determination in the **Federal Register**.

Dated: May 28, 2010.

Harold M. Singer,

Acting Executive Director, Regulations and Rulings, Office of International Trade.

Attachment

HQ H100055

May 28, 2010
OT:RR:CTF:VS H100055 HkP
CATEGORY: Marking

Karen A. McGee, Esq.
Linda M. Weinberg, Esq.
Barnes & Thornburg LLP
750 17th Street, N.W., Suite 900
Washington, DC 20006–4675

RE: Government Procurement; Country of Origin of a Lift Unit for an Overhead Patient Lift System; Substantial Transformation

Dear Mses. McGee and Weinberg: This is in response to your letter dated April 1, 2010, requesting a final determination on behalf of Hill-Rom Company, Inc., pursuant to subpart B of part 177 of the U.S. Customs and Border Protection Regulations (19 C.F.R. Part 177).

Under these regulations, which implement Title III of the Trade Agreements Act of 1979 (TAA), as amended (19 U.S.C. 2511 et seq.), CBP issues country of origin advisory rulings and final determinations as to whether an article is or would be a product of a designated country or instrumentality for the purposes of granting waivers of certain "Buy American" restrictions in U.S. law or practice for products offered for sale to the U.S. Government.

This final determination concerns the country of origin of a lift unit for the Likorall Overhead Patient Lift System. We note that as a U.S. importer Hill-Rom is a party-at-interest within the meaning of 19 C.F.R. § 177.22(d)(1) and is entitled to request this final determination.

FACTS:

According to the information submitted, the Likorall Overhead Patient Lift System is a ceiling-mounted or free-standing patient lift system. The system is capable of lifting and transporting patients with limited mobility, weighing up to 550 pounds, from one part of a room to another or from one room to another. It can also be used for weighing and lifting in combination with a stretcher and for walking, standing, gait and balance training. The system is designed to lift and move patients safely while avoiding injuries to caregivers.

The merchandise at issue, the Likorall lift unit, is the motorized component of the Overhead Patient Lift System that extends and retracts the lift belt to which the patient-supporting sling is attached. The unit is manufactured in 3 basic models: (1) 242, which has a lifting capacity up to 440 pounds; (2) 243, which has a lifting capacity up to 507 pounds; and (3) 250, which has a lifting capacity up to 550 pounds. Models 243 and 250 come in an "ES" version, which is equipped with an infrared (IR) receiver for optional use with a remote control. Model 242 comes in the "S" version, which operates only with an attached hand control, as well as in the ES version. In addition, the 242 model has "R2R" versions, which feature a contact for a transfer motor so that the patient can be moved between two independent overhead rail systems in separate rooms, without the need for openings above doorways. The lift unit was designed, developed and engineered in Sweden. It incorporates approximately 100 components imported from non-TAA countries, except for the motor, which is imported from a TAA country and the IR remote control, which is made in Sweden.

At the manufacturing facility in Sweden, teams of employees assemble the lift unit in a four segment process and perform a 25-step final functional test under specified conditions. The segments are: Manufacturing the electrical motor, drum and motor package in a 17-step process; mounting batteries and installing the exterior covers of the drum/motor assembly in a 5-step process; connecting a printed circuit board assembly (PCBA) to the motor, housed drum and batteries in a 3-step process; and, assembling the emergency strap, cover and end caps in a 14-step process. The PCBA is assembled and programmed prior to importation into Sweden but is designed in Sweden and its software program is written in Sweden. During the final functional test the electronics of the lift unit are checked and the maximum load is attached to check performance. At the conclusion of the test, the employee performing the test must complete a test protocol form, with the original being provided to the customer and a copy retained by the manufacturer in a test log that tracks units by serial number. The full manufacturing process takes approximately 45 minutes and the testing process takes approximately 15 minutes.

According to the information submitted, the employees manufacturing the lift unit have mechanical knowledge and skill related to their work gained from technical secondary education, product specific training, and certified final functional test training. The lift unit is also tested by an accredited testing institute and complies with the requirements of directives for medical-technical Class 1 products in the European Union (MDD 93/42/EEC).

Packaged for retail sale with the lift unit is a hand control, which is attached by cable to the overhead unit and is used to control power, lifting and lowering of the lift unit's belt, and the moving of the lift unit along the rails. The hand control plugs into a contact on one of the end plates and is physically and electrically connected to the overhead lift unit. It is made in a non-TAA country. An IR remote hand control (ES versions and 242 ESR2R), which can be used as an alternative to the attached hand control is also imported with the unit. The remote control and the PCB it incorporates are made in Sweden. A battery charger, into which the wired hand control is inserted to charge the batteries inside the lift unit, is also imported with the lift unit. The charger is made in the same non-TAA country as the hand control.

ISSUE:

What is the country of origin of the lift unit for purposes of U.S. government procurement?

LAW AND ANALYSIS:

Pursuant to Subpart B of Part 177, 19 CFR § 177.21 et seq., which implements Title III of the Trade Agreements Act of 1979, as amended (19 U.S.C. § 2511 et seq.), CBP issues country of origin advisory rulings and final determinations as to whether an article is or would be a product of a designated country or instrumentality for the purposes of granting waivers of certain "Buy American" restrictions in U.S. law or practice for products offered for sale to the U.S. Government.

Under the rule of origin set forth under 19 U.S.C. § 2518(4)(B):

An article is a product of a country or instrumentality only if (i) it is wholly the growth, product, or manufacture of that country or instrumentality, or (ii) in the case of an article which consists in whole or in part of materials from another country or instrumentality, it has been substantially transformed into a new and different article of commerce with a name, character, or use distinct from that of the article or articles from which it was so transformed.

See also 19 CFR § 177.22(a).

In determining whether the combining of parts or materials constitutes a substantial transformation, the determinative issue is the

extent of operations performed and whether the parts lose their identity and become an integral part of the new article. *Belcrest Linens v. United States,* 573 F. Supp. 1149 (Ct. Int'l Trade 1983), *aff'd,* 741 F.2d 1368 (Fed. Cir. 1984). Assembly operations that are minimal or simple, as opposed to complex or meaningful, will generally not result in a substantial transformation. *See* C.S.D. 80–111, C.S.D. 85–25, C.S.D. 89–110, C.S.D. 89–118, C.S.D. 90–51, and C.S.D. 90–97. In C.S.D. 85–25, 19 Cust. Bull. 844 (1985), CBP held that for purposes of the Generalized System of Preferences ("GSP"), the assembly of a large number of fabricated components onto a printed circuit board in a process involving a considerable amount of time and skill resulted in a substantial transformation. In that case, in excess of 50 discrete fabricated components (such as resistors, capacitors, diodes, integrated circuits, sockets, and connectors) were assembled. Whether an operation is complex and meaningful depends on the nature of the operation, including the number of components assembled, number of different operations, time, skill level required, attention to detail, quality control, the value added to the article, and the overall employment generated by the manufacturing process.

In order to determine whether a substantial transformation occurs when components of various origins are assembled into completed products, CBP considers the totality of the circumstances and makes such determinations on a case-by-case basis. The country of origin of the item's components, extent of the processing that occurs within a country, and whether such processing renders a product with a new name, character, and use are primary considerations in such cases. Additionally, factors such as the resources expended on product design and development, the extent and nature of post-assembly inspection and testing procedures, and worker skill required during the actual manufacturing process will be considered when determining whether a substantial transformation has occurred. No one factor is determinative.

CBP has held in a number of cases that complex and meaningful assembly operations involving a large number of components result in a substantial transformation. In Headquarters Ruling Letter (HQ) H047362, dated March 26, 2009, CBP found that 61 components manufactured in China and assembled into ground fault circuit interrupters (GFCIs) in Mexico in a two-phase process by skilled workers using sophisticated equipment were substantially transformed in Mexico. In particular, we took into consideration that the first phase involved the assembly of a PCB in a 42-step technically complex process that took 12 minutes and that the completed PCB had all the major components necessary for the GFCI to fulfill its function. We also took into consideration that in the second phase the PCB would be assembled with 29 other components to form the GFCIs in a 43-step process taking approximately 10 minutes, after which the components would have lost their individual identities and become an integral part of the interrupters with a new name, character and use.

By contrast, assembly operations that are minimal or simple will generally not result in a substantial transformation. For example, in HQ 734050, dated June 17, 1991, CBP held that Japanese-origin components were not substantially transformed in China when assembled in that country to form finished printers. The printers consisted of five main components identified as the "head", "mechanism", "circuit", "power source", and "outer case." The circuit, power source and outer case units were entirely assembled or molded in Japan. The head and mechanical units were made in Japan but exported to China in an unassembled state. All five units were exported to China where the head and mechanical units were assembled with screws and screwdrivers. Thereafter, the head, mechanism, circuit, and power source units were mounted onto the outer case with screws and screwdrivers. In holding that the country of origin of the assembled printers was Japan, CBP recognized that the vast majority of the printer's parts were of Japanese origin and that the operations performed in China were relatively simple assembly operations.

In this case, approximately 100 components manufactured in non-TAA countries will be assembled in Sweden in four phases requiring specialized training. The manufacturing process has 39 steps and takes 45 minutes. After manufacturing, the unit is subjected to a 25-step testing process, which takes approximately 15 minutes. We find these manufacturing and testing operations in Sweden to be sufficiently complex and meaningful, in that individual components' names, uses and identities are lost and are transformed in Sweden into the lift unit. Therefore, the country of origin of the lift unit is Sweden.

You argue that of the lift unit, detachable hand control and battery charger being imported, the lift unit provides the essential character of the Likorall System. "The term 'character' is defined as 'one of the essentials of structure, form, materials, or function that together make up and usually distinguish the individual.'" *Uniden America Corporation v. United States,* 120 F. Supp. 2d. 1091, 1096 (citations omitted) (Ct. Int'l Trade 2000), *citing National Hand Tool Corp. v. United States,* 16 Ct. Int'l Trade 308, 311 (1992). In *Uniden* (concerning whether the assembly of cordless telephones and the installation of their detachable A/C (alternating current) adapters constituted instances of substantial transformation), the Court of International Trade applied the "essence test" and found that "[t]he essence of the telephone is housed in the base and the handset. Consumers do not buy the article because of the specific function of the A/C adapter, but rather because of what the completed handset and base provide: communication over telephone wires." *Id.* at 1096.

Further, you argue that the detachable hand control and battery charger are substantially transformed with the lift unit, in that they have a new character, use and name because they are attached to and form parts of the Likorall System. In support of this view, you cite *Uniden, supra,* in which the court also found that the detachable A/C adapters underwent a substantial transformation pursuant to the Generalized System of Preferences (GSP) when installed into the cordless telephones. The court noted that the substantial transformation test is to be applied to the product as a whole and not to each of its detachable components. *See id.* Consequently, the court found that the A/C adapter, as part of the cordless phone, had a new character, use and name.

Based on the findings of the court in *Uniden,* we agree with your view that the detachable hand control and battery charger are substantially transformed when attached to the lift unit. Consequently, if they are imported from Sweden packaged together with the lift unit, their country of origin for purposes of U.S. government procurement will be Sweden.

HOLDING

Based on the facts of this case, we find that the manufacturing and testing operations performed in Sweden substantially transforms the non-TAA country components. Therefore, the country of origin of the lift unit is Sweden for purposes of U.S. government procurement. Moreover, because the lift unit conveys the essential character of the Likorall System and the detachable hand control and the battery charger are parts of that system, they are substantially transformed when attached to the lift unit. The country of origin of the hand control and battery charger for purposes of U.S. government procurement, when imported from Sweden packaged with the lift unit, is Sweden.

Notice of this final determination will be given in the **Federal Register**, as required by 19 CFR § 177.29. Any party-at-interest other than the party which requested this final determination may request, pursuant to 19 CFR § 177.31, that CBP reexamine the matter anew and issue a new final determination. Pursuant to 19 CFR § 177.30, any party-at-interest may, within 30 days after publication in the **Federal Register** Notice referenced above, seek judicial review of this final determination before the Court of International Trade.

Sincerely,

Harold M. Singer
Acting Executive Director
Regulations and Rulings
Office of International Trade

[FR Doc. 2010–13497 Filed 6–3–10; 8:45 am]

BILLING CODE 9111–14–P

DEPARTMENT OF HOUSING AND URBAN DEVELOPMENT

[Docket No. FR–5300–FA–25]

Announcement of Funding Awards for the Resident Opportunity and Self-Sufficiency (ROSS)—Service Coordinators Program for Fiscal Year 2009

AGENCY: Office of Public and Indian Housing, HUD.

ACTION: Announcement of funding awards.

SUMMARY: In accordance with Section 102(a)(4)(C) of the Department of Housing and Urban Development Reform Act of 1989, this announcement notifies the public of funding decisions made by the Department for funding under the FY 2009 Notice of Funding Availability (NOFA) for the Resident Opportunity and Self-Sufficiency (ROSS) Service Coordinators Program funding for Fiscal Year 2009. This announcement contains the consolidated names and addresses of those award recipients selected for funding based on the selection process established in the NOFA.

FOR FURTHER INFORMATION CONTACT: For questions concerning the FY 2009 Resident Opportunity and Self-Sufficiency (ROSS) Service Coordinators Program awards, contact the Office of Public and Indian Housing's Grant Management Center, Acting Director, Cedric A. Brown, Department of Housing and Urban Development, Washington, DC, telephone (202) 475–8589. For the hearing or speech impaired, these numbers may be accessed via TTY (text telephone) by calling the Federal Information Relay Service at 1 (800) 877–8339. (Other than the "800" TTY number, these telephone numbers are not toll-free.)

SUPPLEMENTARY INFORMATION: The authority for the $28,000,000 in one-year budget authority for the Resident Opportunity and Self-Sufficiency (ROSS) Service Coordinators Program is found in the Department of Housing and Urban Development Appropriations Act, 2009 (Pub. L. 111–8, approved March 11, 2009) plus any carryover or recaptured funds from prior ROSS appropriations that may have become available.

The purpose of the ROSS Service Coordinators program is to provide grants to public housing agencies (PHAs), tribes/tribally designated housing entities (TDHEs), Resident Associations (RAs), and non-profit organizations (including grassroots, faith-based and other community-based organizations) for the provision of a Service Coordinator to coordinate supportive services and other activities designed to help Public and Indian housing residents attain economic and housing self-sufficiency. This program works to promote the development of local strategies to coordinate the use of assistance under the Public Housing program with public and private resources, for supportive services and resident empowerment activities. A Service Coordinator ensures that program participants are linked to the supportive services they need to achieve self-sufficiency or remain independent.

The Fiscal Year 2009 awards announced in this Notice were selected for funding in a competition announced in the **Federal Register** NOFA published on July 29, 2009. In accordance with Section 102(a)(4)(C) of the Department of Housing and Urban Development Reform Act of 1989 (103 Stat. 1987, 42 U.S.C. 3545), the Department is publishing the names, addresses, and amounts of the 91 awards made under the Resident Opportunity and Self-Sufficiency Service Coordinators competition.

Dated: May 21, 2010.

Sandra B. Henriquez,

Assistant Secretary for Public and Indian Housing.

Recipient	Address, City, State, Zip code	Amount
Alexander City Housing Authority	2110 County Road, Alexander City, AL 35010	$240,000
Jefferson County Housing Authority	3700 Industrial Parkway, Birmingham, AL 35217	199,500
Mobile Housing Board	151 South Claiborne Street, Mobile, AL 36602	686,520
Jonesboro Urban Renewal & Housing Authority	330 Union, Jonesboro, AR 72401	152,630
Little Rock Housing Authority	100 South Arch Street, Little Rock, AR 72201	141,000
Flagstaff Housing Authority	3481 North Fanning Drive, Flagstaff, AZ 86003	168,762
San Carlos Housing Authority	P.O. Box 740, Highway 70, Moonbase Road, Peridot, AZ 85542	240,000
Housing Authority of the City of Oakland	1619 Harrison Street, Oakland, CA 94612	240,000
Housing Authority of the City of Oxnard	435 South D Street, Oxnard, CA 93030	240,000
Housing Authority of the County of Marin	4020 Civic Center Drive, San Rafael, CA 94903	240,000
Northern California Presbyterian Homes & Services, Inc	1525 Post Street, San Francisco, CA 94109	720,000
Columbine Homes Local Resident Council	201 South Yuma Street, Denver, CO 80223	202,317
Housing Authority of the City of Pueblo	1414 North Santa Fe Avenue, 10th Floor, Pueblo, CO 81003	240,000
Mulroy Apartments Local Resident Council	3550 West 13th Street, Denver, CO 80204	202,317
Housing Authority of the City of New Haven	360 Orange Street, New Haven, CT 6511	720,000
Housing Authority of the City of Norwalk	P.O. Box 508, 24 1/2 Monroe Street, Norwalk, CT 6856	240,000
Boca Raton Housing Authority	201 West Palmetto Park Road, Boca Raton, FL 33432	182,818
Hialeah Housing Authority	75 East 6th Street, Hialeah, FL 33010	480,000
Housing Authority of the City of Orlando, Florida	390 North Bumby Avenue, Orlando, FL 32803	409,526
Tallahassee Housing Authority	2940 Grady Road, Tallahassee, FL 32312	240,000
The Housing Authority of the City of Tampa	1514 Union Street, Tampa, FL 33607	682,560
Gainesville Housing Authority	1750 Pearl Nix Parkway, Gainesville, GA 30503	202,908
Housing Authority of Columbus, Georgia	1000 Wynnton Road, Columbus, GA 31902	345,000
Housing Authority of DeKalb County	750 Commerce Drive, Suite 201, Decatur, GA 30030	156,000
Housing Authority of the City of West Point Georgia	P.O. Box 545, 1201 East 12th Street, West Point, GA 31833	174,000
Kokua Kalihi Valley Comprehensive Family Services	2239 North School Street, Honolulu, HI 96819	365,623
Holsten Human Capital Development, NFP	1333 North Kingsbury, Suite 305, Chicago, IL 60642	720,000
The Housing Authority of the City of Bloomington	104 East Wood, Bloomington, IL 61701	240,000
Lawrence-Douglas County Housing Authority	1600 Haskell Avenue, Lawrence, KS 66044	240,000
Housing Authority of Somerset	P.O. Box 449, Somerset, KY 42502	197,095
Boston Housing Authority	52 Chauncy Street, Boston, MA 02111	480,000
Holyoke Housing Authority	475 Maple Street, Suite One Holyoke, MA 01040	240,000
Medford Housing Authority	121 Riverside Drive, Medford, MA 02155	240,000
Springfield Housing Authority	25 Saab Court, Springfield, MA 01104	390,000
Worcester Housing Authority	40 Belmont Street, Worcester, MA 01605	240,000
Allendale Tenant Council	3600 West Franklin Street, 1st. Floor, Baltimore MD 21229	240,000
Brooklyn Homes Tenant Council	4140 Tenth Street, Baltimore, MD 21225	240,000
Housing Authority of Baltimore City	417 East Fayette Street, Room 923, Baltimore, MD 21202	720,000
Housing Authority of the City of Frederick	209 Madison Street, Frederick, MD 21701	210,000
Housing Opportunities Commission of Montgomery County, MD	10400 Detrick Avenue, Kensington, MD 20895	230,000

Recipient	Address, City, State, Zip code	Amount
J Van Story Branch Tenant Council	11 West 20th Street, Baltimore, MD 21218	240,000
Lakeview Towers Tenant Council	727 Druid Park Lake Drive, Baltimore, MD 21217	240,000
O'Donnell Heights Tenant Council	1200 Gusryan Street, Baltimore, MD 21224	240,000
Rockville Housing Enterprises	Southlawn Lane, Rockville, MD 20850	240,000
Detroit Housing Commission	1301 East Jefferson, Detroit, MI 48207	643,925
Sault Tribe of Chippewa Indians Housing Authority	154 Parkside, Kincheloe, MI 49788	158,052
Hopkins Housing and Redevelopment Authority	1010 1st Street South, Hopkins, MN 55343	228,725
St. Louis Park Housing Authority	5005 Minnetonka Boulevard, St. Louis Park, MN 55416	237,000
Housing Authority of the City of Charlotte	1301 South Boulevard, Charlotte, NC 28203	662,417
Housing Authority of the City of Wilmington, NC	1524 South 16th Street, Wilmington, NC 28401	240,000
The Housing Authority of the City of Durham	P.O. Box 1726, 330 East Main Street, Durham NC 27701	480,000
Housing Authority of Gloucester County	100 Pop Moylan Boulevard, Deptford, NJ 08096	112,871
Millville Housing Authority	P.O. Box 803, 1153 Holly Barry Lane, Millville, NJ 08360	195,000
New Jersey Association of Public and Subsidized Housing	303 Washington Street, 4th Floor, Newark, NJ 07102	240,000
Pleasantville Housing Authority	156 North Main Street, Pleasantville, NJ 08232	240,000
The Newark Housing Authority	500 Broad Street, 2nd Floor, Newark, NJ 07102	720,000
Woodbridge Garden Apartment Resident Council	20 Bunns Lane, Woodbridge, NJ 07095	206,000
Citywide Council of Syracuse Low Income Housing Residents	516 Burt Street, Syracuse, NY 13202	480,000
New Rochelle Municipal Housing Authority	50 Sickles Avenue, New Rochelle, NY 10801	240,000
New York Housing Authority	250 Broadway, New York, NY 10007	720,000
Dayton Metropolitan Housing Authority	P.O. Box 8750, 400 Wayne Avenue, Dayton, OH 45401	692,180
Fairfield Metropolitan Housing Authority	315 North Columbus Street, Lancaster, OH 43130	140,700
Tonkawa Tribe of Indians of Oklahoma	1 Rush Buffalo Road, Tonkawa, OK 74653	172,369
Community Action Southwest	150 West Beau Street, Suite 304, Washington, PA 15301	142,750
Housing Association of Delaware Valley	1528 Walnut Street, Suite 1000, Philadelphia, PA 19102	240,000
Mercer County Housing Authority	80 Jefferson Avenue, Sharon, PA 16146	186,000
Ramsey Educational Development Institute	1060 First Avenue, Suite 430, King of Prussia, PA 19406	240,000
Johnston Housing Authority	8 Forand Circle, Johnston, RI 2919	174,000
Franklin Housing Authority	100 Spring Street, Franklin, TN 37064	200,592
Kingsport Housing & Redevelopment Authority	P.O. Box 44, Kingsport, TN 37662	240,000
Metropolitan Development and Housing Agency	701 South Sixth Street, Nashville, TN 37206	720,000
Shelbyville Housing Authority	P.O. Box 560, 316 Templeton Street, Shelbyville, TN 37162	186,613
Tennessee's Community Assistance Corporation	P.O. Box 485, Morristown, TN 37815	173,932
Cameron County Housing Authority	65 Castellano Circle, Brownsville, TX 78521	196,742
Georgetown Housing Authority	P.O. Box 60, Georgetown TX 78664	156,000
HACA City-Wide Advisory Board	1124 South IH–35, Austin, TX 78704	698,148
San Marcos Housing Authority	1201 Thorpe Lane, San Marcos, TX 78666	204,566
The Housing Authority of the City of Dallas, Texas (DHA)	3939 North Hampton Road, Dallas, TX 75212	471,094
Housing Authority of the County of Salt Lake	3595 South Main Street, Salt Lake City, UT 84115	222,000
Bristol Redevelopment and Housing Authority	809 Edmond Street, Bristol, VA 24201	198,864
Fairfax County Redevelopment and Housing Authority	3700 Pender Drive, Suite 300, Fairfax VA 22030	480,000
Roanoke Redevelopment & Housing Authority	2624 Salem Turnpike Northwest, Roanoke, VA 24017	398,034
Waynesboro Redevelopment and Housing Authority	P.O. Box 1138, 1700 New Hope Road, Waynesboro, VA 22980	169,186
Rutland Housing Authority	5 Tremont Street, Rutland, VT 05701	231,395
Housing Authority of the City of Vancouver (WA)	2500 Main Street, Suite 100, Vancouver, WA 98660	216,434
Puyallup Tribal Housing Authority	2806 East Portland Avenue, Tacoma, WA 98404	240,000
College Court Resident Organization	c/o Kenneth Barbeau, Contract Administrator, HACM, 650 West Reservoir Avenue, Milwaukee, WI 53212.	229,548
Locust Court Resident Organization	650 West Reservoir Avenue, Milwaukee, WI 53212	229,536
Merrill Park Resident Organization	650 West Reservoir Avenue, Milwaukee, WI 53212	185,597
Oneida Tribe of Indians of Wisconsin	P.O. Box 365, Oneida, WI 54155	210,403
Wheeling Housing Authority	P.O. Box 2089, Wheeling, WV 26003	198,500

[FR Doc. 2010–13471 Filed 6–3–10; 8:45 am]

BILLING CODE 4210–67–P

DEPARTMENT OF HOUSING AND URBAN DEVELOPMENT

[Docket No. FR–5375–N–21]

Federal Property Suitable as Facilities To Assist the Homeless; Republication

Editorial Note: FR Doc. 2010–13257 which was originally published at page 30847 in the issue of Wednesday, June 2, 2010 is being republished in its entirety in the issue of Friday, June 4, 2010 because it incorrectly published on June 2, 2010.

AGENCY: Office of the Assistant Secretary for Community Planning and Development, HUD.

ACTION: Notice.

SUMMARY: This Notice identifies unutilized, underutilized, excess, and surplus Federal property reviewed by HUD for suitability for possible use to assist the homeless.

FOR FURTHER INFORMATION CONTACT: Kathy Ezzell, Department of Housing and Urban Development, 451 Seventh Street, SW., Room 7266, Washington, DC 20410; telephone (202) 708–1234; TTY number for the hearing- and speech-impaired (202) 708–2565 (these telephone numbers are not toll-free), or call the toll-free Title V information line at 800–927–7588.

SUPPLEMENTARY INFORMATION: In accordance with 24 CFR part 581 and section 501 of the Stewart B. McKinney Homeless Assistance Act (42 U.S.C. 11411), as amended, HUD is publishing this Notice to identify Federal buildings and other real property that HUD has reviewed for suitability for use to assist the homeless. The properties were reviewed using information provided to HUD by Federal landholding agencies regarding unutilized and underutilized buildings and real property controlled by such agencies or by GSA regarding

its inventory of excess or surplus Federal property. This Notice is also published in order to comply with the December 12, 1988 Court Order in *National Coalition for the Homeless* v. *Veterans Administration*, No. 88–2503–OG (D.D.C.).

Properties reviewed are listed in this Notice according to the following categories: Suitable/available, suitable/unavailable, suitable/to be excess, and unsuitable. The properties listed in the three suitable categories have been reviewed by the landholding agencies, and each agency has transmitted to HUD: (1) Its intention to make the property available for use to assist the homeless, (2) its intention to declare the property excess to the agency's needs, or (3) a statement of the reasons that the property cannot be declared excess or made available for use as facilities to assist the homeless.

Properties listed as suitable/available will be available exclusively for homeless use for a period of 60 days from the date of this Notice. Where property is described as for "off-site use only" recipients of the property will be required to relocate the building to their own site at their own expense. Homeless assistance providers interested in any such property should send a written expression of interest to HHS, addressed to Theresa Rita, Division of Property Management, Program Support Center, HHS, room 5B–17, 5600 Fishers Lane, Rockville, MD 20857; (301) 443–2265. (This is not a toll-free number.) HHS will mail to the interested provider an application packet, which will include instructions for completing the application. In order to maximize the opportunity to utilize a suitable property, providers should submit their written expressions of interest as soon as possible. For complete details concerning the processing of applications, the reader is encouraged to refer to the interim rule governing this program, 24 CFR part 581.

For properties listed as suitable/to be excess, that property may, if subsequently accepted as excess by GSA, be made available for use by the homeless in accordance with applicable law, subject to screening for other Federal use. At the appropriate time, HUD will publish the property in a Notice showing it as either suitable/available or suitable/unavailable.

For properties listed as suitable/unavailable, the landholding agency has decided that the property cannot be declared excess or made available for use to assist the homeless, and the property will not be available.

Properties listed as unsuitable will not be made available for any other purpose for 20 days from the date of this Notice. Homeless assistance providers interested in a review by HUD of the determination of unsuitability should call the toll free information line at 1–800–927–7588 for detailed instructions or write a letter to Mark Johnston at the address listed at the beginning of this Notice. Included in the request for review should be the property address (including zip code), the date of publication in the **Federal Register**, the landholding agency, and the property number.

For more information regarding particular properties identified in this Notice (*i.e.*, acreage, floor plan, existing sanitary facilities, exact street address), providers should contact the appropriate landholding agencies at the following addresses: *Agriculture:* Ms. Brenda Carignan, Department of Agriculture, Reporters Building, 300 7th Street, SW., Rm. 337, Washington, DC 20024; (202) 401–0787; *Air Force:* Mr. Robert Moore, Air Force Real Property Agency, 143 Billy Mitchell Blvd. Ste. 1, San Antonio, TX 78226; (210) 395–9512; *COE:* Mr. Scott Whiteford, Army Corps of Engineers, Real Estate, CEMP-CR, 441 G Street, NW., Washington, DC 20314; (202) 761–5542; *Energy:* Mr. Mark Price, Department of Energy, Office of Engineering & Construction Management, MA–50, 1000 Independence Ave, SW., Washington, DC 20585: (202) 586–5422; *GSA:* Mr. Gordon Creed, General Services Administration, Office of Property Disposal, 18th and F St., NW., Washington, DC 20405; (202) 501–0084; *Navy:* Mr. Albert Johnson, Department of the Navy, Asset Management Division, Naval Facilities Engineering Command, Washington Navy Yard, 1330 Patterson Ave., SW., Suite 1000, Washington, DC 20374; (202) 685–9305; (These are not toll-free numbers).

Dated: May 27, 2010.

Mark R. Johnston,

Deputy Assistant Secretary for Special Needs.

Title V, Federal Surplus Property Program

Federal Register Report for 06/04/2010

Suitable/Available Properties

Building

Colorado

7 Bldgs.
U.S. Air Force Academy
El Paso CO 80840
Landholding Agency: Air Force
Property Number: 18201020002
Status: Unutilized
Directions: 6501, 6502, 6503, 6504, 6505, 6507, and 6508
Comments: 2222 sq. ft. each

Iowa

Former SSA Bldg.
3012 Division Street
Burlington IA 52601
Landholding Agency: GSA
Property Number: 54201020005
Status: Excess
GSA Number: 7–G–IA–0508
Comments: 5060 sq. ft., most recent use—office

Ohio

Bldg. MURDOT–23142
5153 State Rd
Dover OH 44622
Landholding Agency: COE
Property Number: 31201020001
Status: Unutilized
Comments: 664 sq. ft. office bldg., presence of asbestos/lead paint, off-site use only

Belmont Cty Memorial USAR Ctr
5305 Guernsey St.
Bellaire OH 43906
Landholding Agency: GSA
Property Number: 54201020008
Status: Excess
GSA Number: 1–D–OH–837
Comments: 11,734 sq. ft.—office/drill hall; 2,519 sq. ft.—maint. shop

South Dakota

Camp Crook Bldg. No. 2002
Camp Crook Co: Harding SD 57724
Landholding Agency: GSA
Property Number: 54201020007
Status: Surplus
GSA Number: 7–A–SD–0535–1
Comments: off-site removal only, 2395 sq. ft., needs repair, and presence of asbestos

LAND

Missouri

Annex No. 3
Whiteman AFB
Knob Noster MO 65336
Landholding Agency: Air Force
Property Number: 18201020001
Status: Underutilized
Comments: 9 acres

Unsuitable Properties

Building

Alaska

Bldg. 100 and 101
Long Range Radar Site
Point Barrow AK
Landholding Agency: Air Force
Property Number: 18201020003
Status: Unutilized
Reasons: Within 2000 ft. of flammable or explosive material Within airport runway clear zone

7 Bldgs.
Eareckson Air Station
Eareckson AK 99546
Landholding Agency: Air Force
Property Number: 18201020004
Status: Unutilized
Directions: 132, 152, 153, 750, 3013, 3016, and 4012
Reasons: Within airport runway clear zone, Secured Area, and Extensive deterioration

California

Bldgs. 591, 970, 1565

Vandenberg AFB
Vandenberg CA 93437
Landholding Agency: Air Force
Property Number: 18201020005
Status: Unutilized
Reasons: Extensive deterioration, Secured Area

11 Bldgs.
Lawrence Berkeley Nat'l Lab
Berkeley Co: Alameda CA 94720
Landholding Agency: Energy
Property Number: 41201020008
Status: Excess
Directions: Bldg. Nos. 25, 25A, 25B, 44, 44A, 44B, 46C, 46D, 52, 52A, and 75A
Reasons: Secured Area

Bldgs. 3550, 3551
Naval Base
San Diego CA
Landholding Agency: Navy
Property Number: 77201020015
Status: Unutilized
Reasons: Secured Area

Colorado

Bldg. 1413
Buckley AFB
Aurora CO
Landholding Agency: Air Force
Property Number: 18201020006
Status: Unutilized
Reasons: Extensive deterioration, Secured Area

Florida

Bldgs. 1622, 60408, and 60537
Cape Canaveral AFS
Brevard FL 32925
Landholding Agency: Air Force
Property Number: 18201020007
Status: Unutilized
Reasons: Secured Area

13 Bldgs.
Tyndall AFB
Bay FL 32403
Landholding Agency: Air Force
Property Number: 18201020008
Status: Excess
Directions: B111, B113, B115, B205, B206, B501, B810, B812, B824, B842, B1027, B1257, and B8402
Reasons: Within 2000 ft. of flammable or explosive material, Secured Area

Georgia

Bldgs. 665 and 1219
Moody AFB
Moody AFB GA 31699
Landholding Agency: Air Force
Property Number: 18201020009
Status: Underutilized
Reasons: Secured Area

12 Bldgs.
West Point Lake
West Point GA 31833
Landholding Agency: COE
Property Number: 31201020002
Status: Unutilized
Directions: WLC06, LC05, LC06, LC07, RP07, WEC04, WEC05, WYJ03, WH17, WR01, WGB04, and RP09
Reasons: Extensive deterioration

Hawaii

Bldgs. 39 and 14111
Kaena Point Satellite Tracking Station
Honolulu HI 96792
Landholding Agency: Air Force
Property Number: 18201020010
Status: Excess
Reasons: Within 2000 ft. of flammable or explosive material, Secured Area

Illinois

Bldgs. 004R43, 003R60
Carlyle Lake
Clinton IL 62231
Landholding Agency: COE
Property Number: 31201020003
Status: Excess
Reasons: Extensive deterioration

Bldg. 621
FERMILAB
Batavia IL
Landholding Agency: Energy
Property Number: 41201020007
Status: Excess
Reasons: Extensive deterioration, Secured Area

Indiana

Bldg. 18
Grissom AFB
Peru IN 46970
Landholding Agency: Air Force
Property Number: 18201020012
Status: Excess
Reasons: Within 2000 ft. of flammable or explosive material

Kansas

27 Bldgs.
McConnell AFB
Sedgwick KS 67210
Landholding Agency: Air Force
Property Number: 18201020013
Status: Excess
Directions: 2052, 2347, 2054, 2056, 2044, 2047, 2049, 2071, 2068, 2065, 2063, 2060, 2237, 2235, 2232, 2230, 2352, 2349, 2345, 2326, 2328, 2330, 2339, 2324, 2342, 2354, and 2333
Reasons: Secured Area

Louisiana

TARS Sites 1–6
Morgan City LA 70538
Landholding Agency: Air Force
Property Number: 18201020014
Status: Unutilized
Reasons: Secured Area

Maine

Bldgs. B496 and 497
Bangor Internatl Airport
Bangor ME 04401
Landholding Agency: Air Force
Property Number: 18201020015
Status: Unutilized
Reasons: Secured Area

New Jersey

5 Bldgs.
Joint Base McGuire-Dix-Lakehurst
Trenton NJ 08641
Landholding Agency: Air Force
Property Number: 18201020016
Status: Unutilized
Directions: 1827, 1925, 3424, 3446, and 3449
Reasons: Extensive deterioration, Secured Area

North Dakota

Bldg. ASH 10367
Baldhill Dam
Barnes ND
Landholding Agency: COE
Property Number: 31201020004
Status: Unutilized
Reasons: Extensive deterioration

Oklahoma

Compound
Canton Lake
Canton OK
Landholding Agency: COE
Property Number: 31201020005
Status: Unutilized
Reasons: Extensive deterioration

South Carolina

7 Bldgs.
Shaw AFB
Sumter SC 29152
Landholding Agency: Air Force
Property Number: 18201020017
Status: Unutilized
Directions: B1026, B400, B401, B1402, B1701, B1711, and B1720
Reasons: Secured Area

Bldgs. B40006 and B40009
Shaw AFB
Wedgefield SC 29168
Landholding Agency: Air Force
Property Number: 18201020018
Status: Unutilized
Reasons: Secured Area

Texas

Wallisville Road Property
Houston TX 77029
Landholding Agency: GSA
Property Number: 54201020006
Status: Surplus
GSA Number: 7–G–TX–1107
Reasons: Within 2000 ft. of flammable or explosive material

Virginia

Bldg. TR–CO1
Tailrace Park
Mecklenberg VA 23917
Landholding Agency: COE
Property Number: 31201020006
Status: Unutilized
Reasons: Extensive deterioration

West Virginia

InKeep House
Smokehole Canyon
Grant WV 26855
Landholding Agency: Agriculture
Property Number: 15201020001
Status: Unutilized
Reasons: Extensive deterioration

Bldg. BLN–01–A–01
Bluestone Lake
Hinton WV 25951
Landholding Agency: COE
Property Number: 31201020007
Status: Unutilized
Reasons: Extensive deterioration

LAND

Illinois

Annex
Scolt Radio Relay
Belleville IL 62221
Landholding Agency: Air Force
Property Number: 18201020011
Status: Unutilized
Reasons: Secured Area

[FR Doc. 2010–13257 Filed 6–1–10; 8:45 am]

Editorial Note: FR Doc. 2010–13257 which was originally published at page 30847 in the issue of Wednesday, June 2, 2010 is being republished in its entirety in the issue of Friday, June 4, 2010 because it incorrectly published on June 2, 2010.

[FR Doc. R1–2010–13257 Filed 6–3–10; 8:45 am]

BILLING CODE 1505–01–D

DEPARTMENT OF THE INTERIOR

Bureau of Indian Affairs

Information Collection for IDEIA Part B and C Child Counts; Comment Request

AGENCY: Bureau of Indian Affairs, Interior.

ACTION: Notice of proposed information collection.

SUMMARY: As required by the Paperwork Reduction Act, the Bureau of Indian Education (BIE), U.S. Department of the Interior (Interior) is seeking comments on a proposed information collection related to the Individuals with Disabilities Education Improvement Act (IDEIA). The IDEIA provides that the Secretary of the Interior will allocate funding for the coordination of assistance for special education and related services for American Indian children aged 0 to 5 with disabilities on reservations served by elementary schools for Indian children that are operated or funded by the Department of the Interior ("Bureau-funded schools"). The BIE allocates this funding to tribes and tribal organizations. In support of this allocation, the BIE collects information on the number of American Indian children aged 0 to 5 with disabilities on reservations served by Bureau-funded schools. This notice requests comments on that information collection.

DATES: Submit comments on or before August 3, 2010.

ADDRESSES: Mail or handcarry comments to Brandi A. Sweet, Program Analyst, U.S. Department of the Interior, Bureau of Indian Education, 1849 C Street, NW., MS–3609, Washington, DC 20240, or via facsimile (202) 208–3312; or via e-mail to *Brandi.Sweet@bie.edu.*

FOR FURTHER INFORMATION CONTACT: Brandi Sweet, Program Analyst, U.S. Department of the Interior, Bureau of Indian Education. Telephone (202) 208–5504.

SUPPLEMENTARY INFORMATION:

I. Abstract

The IDEIA, 20 U.S.C. 1411(h)(4)(c) and 1443(b)(3) require tribes and tribal organizations to submit certain information to the Secretary of the Interior. Under the IDEIA, the U.S. Department of Education provides funding to the Secretary of the Interior for the coordination of assistance for special education and related services for Indian children aged 0 to 5 with disabilities on reservations served by Bureau-funded schools. The Secretary of the Interior, through the BIE, then allocates this funding to tribes and tribal organizations based on the number of such children served. In order to allow the Secretary of the Interior to determine what amounts to allocate to whom, the IDEIA requires tribes and tribal organizations to submit information to Interior. The BIE collects this information on two forms, one for Indian children aged 3 to 5 covered by IDEIA Part B, and one for Indian children aged 0 to 2 covered by IDEIA Part C.

In IDEIA Part B—Assistance for Education of All Children with Disabilities, 20 U.S.C. 1411(h)(4)(D) requires tribes and tribal organizations to use the funds to assist in child find, screening, and other procedures for the early identification of Indian children aged 3 through 5, parent training, and the provision of direct services. In IDEIA Part C—Infants and Toddlers with Disabilities, 20 U.S.C. 1443(b)(4) likewise requires tribes and tribal organizations to use the funds to assist in child find, screening, and other procedures for early identification of Indian children under 3 years of age and for parent training, and early intervention services.

The Paperwork Reduction Act of 1995 provides an opportunity for interested parties to comment on proposed information collection requests. The BIE is proceeding with this public comment period as the first step in obtaining an information collection clearance from the Office of Management and Budget (OMB). Each clearance request contains (1) type of review, (2) title, (3) summary of the collection, (4) respondents, (5) frequency of collection, (6) reporting and record keeping requirements.

II. Request for Comments

The BIE requests your comments on this collection concerning: (a) The necessity of this information collection for the proper performance of the functions of the agency, including whether the information will have practical utility; (b) The accuracy of the agency's estimate of the burden (hours and cost) of the collection of information, including the validity of the methodology and assumptions used; (c) Ways we could enhance the quality, utility and clarity of the information to be collected; and (d) Ways we could minimize the burden of the collection of the information on the respondents, such as through the use of automated collection techniques or other forms of information technology.

Please note that an agency may not sponsor or request, and an individual need not respond to, a collection of information unless it has a valid OMB Control Number.

It is our policy to make all comments available to the public for review at the location listed in the **ADDRESSES** section. Before including your address, phone number, e-mail address or other personally identifiable information, be advised that your entire comment—including your personally identifiable information—may be made public at any time. While you may request that we withhold your personally identifiable information, we cannot guarantee that we will be able to do so.

III. Data

OMB Control Number: 1076–0NEW.

Type of Review: Existing collection in use without an OMB number.

Title: IDEIA Part B and Part C Child Count.

Brief Description of Collection: Indian tribes and tribal organizations served by elementary or secondary schools for Indian children operated or funded by the Department of Interior that receive allocations of funding under the IDEIA for the coordination of assistance for Indian children aged 0 to 5 with disabilities on reservations must submit information to the BIE. The information must be provided on two forms. The Part B form addresses Indian children aged 3 to 5 on reservations served by Bureau-funded schools. The Part C form addresses Indian children up to age 3 on reservations served by Bureau-funded schools. The information required by the forms includes counts of children as of a certain date each year. Response is required to obtain a benefit.

Respondents: Indian tribes and tribal organizations.

Number of Respondents: 61 each year.

Estimated Time per Response: 10 hours per form.

Frequency of Response: Twice (Once per year for each form).

Total Annual Burden to Respondents: 1,220 hours.

Dated: May 24, 2010.

Alvin Foster,

Acting Chief Information Officer—Indian Affairs.

[FR Doc. 2010–13391 Filed 6–3–10; 8:45 am]

BILLING CODE 4310–4M–P

DEPARTMENT OF THE INTERIOR

Fish and Wildlife Service

[FWS–R3–ES–2009–N0065; 30120–1113–0000 D3]

Endangered and Threatened Wildlife and Plants; Post-Delisting Monitoring Plan for Bald Eagle (*Haliaeetus leucocephalus*)

AGENCY: Fish and Wildlife Service, Interior.

ACTION: Notice of availability of post-delisting monitoring plan.

SUMMARY: We, the Fish and Wildlife Service (Service), announce the availability of the final post-delisting monitoring plan (PDM Plan) for the bald eagle (*Haliaeetus leucocephalus*). The Endangered Species Act (ESA) requires that we implement a system, in cooperation with the States, to monitor effectively for at least 5 years the status of all species that have been recovered and no longer need ESA protection. In 2007, we removed the bald eagle in the contiguous 48 States from the Federal List of Threatened and Endangered Wildlife and Plants (delisted) due to recovery. Over a 20-year period, we will monitor the status of the bald eagle, at 5-year intervals.

ADDRESSES: To request a copy of the final PDM Plan, write to Jody Millar at our Rock Island Field Office: U.S. Fish and Wildlife Service, 1511 47th Avenue, Moline, IL 61265; or call (309) 757–5800. You may also request copies by e-mailing us at *baldeaglePDM@fws.gov.* Specify whether you want to receive a hard copy by U.S. mail or an electronic copy by e-mail. The final PDM Plan may also be downloaded from our regional Web site at *http://www.fws.gov/midwest/Endangered* or our bald eagle Web site at *http://www.fws.gov/migratorybirds/baldeagle.htm.*

FOR FURTHER INFORMATION CONTACT: Jody Millar (see **ADDRESSES**). Individuals who are hearing-impaired or speech-impaired may call the Federal Relay Service at 1–800–877–8337 for TTY assistance, 24 hours a day, 7 days a week.

SUPPLEMENTARY INFORMATION:

Background

In the 1970s, bald eagle surveys conducted by the Service, other cooperating agencies, and conservation organizations revealed that the bald eagle population was declining throughout the contiguous 48 States. On December 31, 1972, DDT was banned from use in the United States by the Environmental Protection Agency. The following year, the ESA (16 U.S.C. 1531–1544) was passed. In 1978, the bald eagle was listed throughout the contiguous 48 States as endangered except in Michigan, Minnesota, Wisconsin, Washington, and Oregon, where it was listed as threatened (43 FR 6233, February 14, 1978).

Listing the eagle under the ESA and banning of DDT and other harmful organochlorine chemicals resulted in significant increases in the breeding population of the species throughout the contiguous 48 States. On July 6, 1999, we published a proposed rule (64 FR 36454) to delist the bald eagle in the contiguous 48 States. This document included a draft monitoring plan and requested public comments. Slightly more than 10 percent of all comments we received on that proposal were concerned with post-delisting monitoring and the draft monitoring plan. Since then, we have revised the monitoring plan in response to the comments we received.

We published the notice of availability for the revised draft monitoring plan and the final rule on delisting simultaneously in the **Federal Register** (72 FR 37346) on July 9, 2007. After the comment period closed on October 9, 2007, we reviewed each comment we received and addressed those comments in the final bald eagle post-delisting monitoring plan that we make available now through this notice.

Section 4(g)(1) of the ESA requires that we implement a system, in cooperation with the States, to effectively monitor for not less than 5 years the status of all species that have been recovered and delisted. In order to meet the ESA's monitoring requirement and to facilitate efficient data collection, we have designed a sampling method capable of detecting substantial changes in the bald eagle population in the contiguous 48 States.

Monitoring will consist of collecting information on the number of nesting bald eagles in the contiguous 48 States using State collected data and stratified sampling based on density of identified bald eagle nest sites. Our Bald Eagle Monitoring Team will work cooperatively with the States, Tribes, other agencies, and partners to collect this information. We will analyze the information after each monitoring effort and will propose adjustments to the sampling design, if necessary. At the end of each 5th-year monitoring event, we will review all available information to determine the status of the bald eagle. If these data indicate that the estimated bald eagle population is experiencing significant decreases, we will initiate more intensive review or studies to determine the cause, or take action to re-list the bald eagle under Section 4 of the ESA, if necessary.

Monitoring under the post-delisting monitoring plan began in spring of 2009. We will publish a report on the results of the 2009 monitoring event within 1 year of survey and data analysis completion. This will be the first of our 5-year reports. The reports will be posted on our Web sites, *http://www.fws.gov/midwest/Endangered* and *http://www.fws.gov/migratorybirds/baldeagle.htm.*

In accordance with the Paperwork Reduction Act of 1995 (44 U.S.C. 3501 *et seq.*), the information collection and recordkeeping requirements included in the PDM Plan have been approved by the Office of Management and Budget (OMB) under OMB control number 1018–0143, which expires on November 30, 2012. An agency may not conduct or sponsor, and a person is not required to respond to, a collection of information unless it displays a currently valid OMB control number.

Author

The primary author of this document is Jody Millar (see **ADDRESSES**).

Authority

The authority for this action is the Endangered Species Act of 1973, as amended (16 U.S.C. 1531 *et seq.*)

Dated: May 28, 2010.

Lynn Lewis,

Assistant Regional Director, Ecological Services, Ft. Snelling, MN.

[FR Doc. 2010–13424 Filed 6–3–10; 8:45 am]

BILLING CODE 4310–55–P

DEPARTMENT OF THE INTERIOR

Bureau of Land Management

[LLCO956000.L14200000 BJ0000]

Notice of filing of plats

AGENCY: Bureau of Land Management, Interior.

ACTION: Notice of filing of plats.

SUMMARY: The Bureau of Land Management (BLM) is publishing this notice to inform the public of the intent to file the land survey plats listed below, and to afford all affected parties a proper period of time to protest this action, prior to the plat filing.

DATES: Unless there are protests of this action, the filing of the plats described in this notice will happen on July 6, 2010.

ADDRESSES: BLM, Colorado State Office, Cadastral Survey, 2850 Youngfield

Street, Lakewood, Colorado 80215–7093.

FOR FURTHER INFORMATION CONTACT: Randy Bloom, Chief Cadastral Surveyor for Colorado, (303) 239–3856.

SUPPLEMENTARY INFORMATION: The plat and field notes, of the dependent resurveys and surveys in Township 8 South, Range 96 West, Sixth Principal Meridian, Colorado, were accepted on January 12, 2010.

The plat and field notes, of the dependent resurvey in Township 2 North, Range 72 West, Sixth Principal Meridian, Colorado, were accepted on January 20, 2010.

The plat and field notes, of the dependent resurvey, in Sections 12 and 13, Township 2 North, Range 72 West, Sixth Principal Meridian, Colorado, were accepted on January 20, 2010.

The plat of Protraction Diagram 53, of Township 38 North, Range 8 West, New Mexico Principal Meridian, Colorado, was accepted on March 24, 2010.

The plat and field notes, of the dependent resurvey, in Section 14, Township 1 North, Range 72 West, Sixth Principal Meridian, Colorado, were accepted on March 31, 2010.

The supplemental plat of Section 11 in Township 1 North, Range 72 West, Sixth Principal Meridian, Colorado, was accepted on April 9, 2010.

The plat and field notes, of the dependent resurvey and surveys, in Township 4 South, Range 94 West, Sixth Principal Meridian, Colorado, were accepted on April 12, 2010.

The plat and field notes, of the corrective dependent resurvey, in Township 9 North, Range 79 West, Sixth Principal Meridian, Colorado, were accepted on April 16, 2010.

The plat and field notes, of the dependent resurvey, in Township 3 South, Range 73 West, Sixth Principal Meridian, Colorado, were accepted on April 28, 2010.

The plat and field notes, of the dependent resurvey, in Township 3 North, Range 72 West, Sixth Principal Meridian, Colorado, were accepted on May 4, 2010.

The plat and field notes, of the dependent resurvey in Township 7 South, Range 99 West, Sixth Principal Meridian, Colorado, were accepted on May 5, 2010.

The plat of Protraction Diagram 54, of Township 11 South, Range 86 West, Sixth Principal Meridian, Colorado, was accepted on May 5, 2010.

The plat and field notes, of the dependent resurveys of mineral surveys in Section 18, Township 1 North, Range 71 West, Sixth Principal Meridian, Colorado, were accepted on May 19, 2010.

The plat and field notes, of the dependent resurveys of mineral surveys in Section 13, Township 1 North, Range 72 West, Sixth Principal Meridian, Colorado, were accepted on May 19, 2010.

The supplemental plat of Section 13 in Township 1 North, Range 72 West, Sixth Principal Meridian, Colorado, was accepted on May 20, 2010.

The plat and field notes, of the dependent resurvey in Section 13, Township 9 South, Range 80 West, Sixth Principal Meridian, Colorado, were accepted on May 21, 2010.

The plat and field notes, of the dependent resurvey of certain mineral surveys in Section 24, Township 9 South, Range 80 West, Sixth Principal Meridian, Colorado, were accepted on May 21, 2010.

The plat and field notes, of the dependent resurvey and survey in Township 6 South, Range 91 West, Sixth Principal Meridian, Colorado, were accepted on May 25, 2010.

The plat and field notes, of the dependent resurvey in Township 1 South, Range 77 West, Sixth Principal Meridian, Colorado, were accepted on May 26, 2010.

If a protest of any of these projects is received prior to the date of the official filing, the official filing of that project will be stayed pending consideration of the merits of the protest.

Randy Bloom,

Chief Cadastral Surveyor for Colorado.

[FR Doc. 2010–13426 Filed 6–3–10; 8:45 am]

BILLING CODE 4310–JB–P

DEPARTMENT OF THE INTERIOR

Bureau of Land Management

[LLMT926000–10–L19100000–BJ0000–LRCM07RE4030]

Notice of Filing of Plats of Survey; Montana

AGENCY: Bureau of Land Management, Interior.

ACTION: Notice of filing of plats of survey.

SUMMARY: The Bureau of Land Management (BLM) will file the plat of survey of the lands described below in the BLM Montana State Office, Billings, Montana, July 6, 2010.

FOR FURTHER INFORMATION CONTACT: Marvin Montoya, Cadastral Surveyor, Branch of Cadastral Survey, Bureau of Land Management, 5001 Southgate Drive, Billings, Montana 59101–4669, telephone (406) 896–5124 or (406) 896–5009.

SUPPLEMENTARY INFORMATION: This survey was executed at the request of the Superintendent, Fort Peck Agency, through the Rocky Mountain Regional Director, Bureau of Indian Affairs, and was necessary to determine boundaries of trust or tribal interest lands.

The lands we surveyed are:

Principal Meridian, Montana

T. 28 N., R. 53 E.

The plat, in 1 sheet, representing the dependent resurvey of portions of the south and west boundaries and the subdivisional lines, the adjusted original meanders of the former left bank of the Missouri River, downstream, through sections 30 and 31, a portion of the subdivision of sections 30 and 31, and the subdivision of sections 30 and 31 and the survey of the meanders of the present left bank of the Missouri River, downstream, through sections 30 and 31, the left bank of a relicted channel of the Missouri River, downstream, through sections 30 and 31, the medial lines of two relicted channels of the Missouri River, through sections 30 and 31, a division of accretion line, certain partition lines and an island (Tract 37), Township 28 North, Range 53 East, Principal Meridian, Montana, was accepted May 25, 2010.

We will place a copy of the plat, in 1 sheet, and related field notes we described in the open files. They will be available to the public as a matter of information. If the BLM receives a protest against this survey, as shown on this plat, in 1 sheet, prior to the date of the official filing, we will stay the filing pending our consideration of the protest. We will not officially file this plat, in 1 sheet, until the day after we have accepted or dismissed all protests and they have become final, including decisions or appeals.

Authority: 43 U.S.C. Chap 3.

Dated: May 27, 2010.

James D. Claflin,

Chief Cadastral Surveyor, Division of Resources.

[FR Doc. 2010–13406 Filed 6–3–10; 8:45 am]

BILLING CODE 4310–DN–P

DEPARTMENT OF THE INTERIOR

Fish and Wildlife Service

[FWS–R4–ES–2010–N109; 40120–1112–0000–F5]

Receipt of Applications for Endangered Species Permits

AGENCY: Fish and Wildlife Service, Interior.

ACTION: Notice.

SUMMARY: We, the U.S. Fish and Wildlife Service, invite the public to comment on the following applications to conduct certain activities with

endangered species. With some exceptions, the Endangered Species Act (ESA) prohibits activities with listed species unless a Federal permit is issued that allows such activities. The ESA requires that we invite public comment before issuing these permits.

DATES: We must receive written data or comments on the applications at the address given below, by *July 6, 2010.*

ADDRESSES: Documents and other information submitted with the applications are available for review, subject to the requirements of the Privacy Act and Freedom of Information Act, by any party who submits a written request for a copy of such documents to the following office within 30 days of the date of publication of this notice: Fish and Wildlife Service, 1875 Century Boulevard, Suite 200, Atlanta, Georgia 30345 (Attn: Cameron Shaw, Permit Coordinator).

FOR FURTHER INFORMATION CONTACT: Cameron Shaw, telephone 904/731–3191; facsimile 904/731–3045.

SUPPLEMENTARY INFORMATION: The public is invited to comment on the following applications for permits to conduct certain activities with endangered and threatened species pursuant to section 10(a)(1)(A) of the Endangered Species Act of 1973, as amended (16 U.S.C. 1531 *et seq.*). This notice is provided under section 10(c) of the Act. If you wish to comment, you may submit comments by any one of the following methods. You may mail comments to the Fish and Wildlife Service's Regional Office (*see* **ADDRESSES** section) or via electronic mail (e-mail) to: *permitsR4ES@fws.gov.* Please include your name and return address in your e-mail message. If you do not receive a confirmation from the Fish and Wildlife Service that we have received your e-mail message, contact us directly at the telephone number listed above (*see* **FOR FURTHER INFORMATION CONTACT** section). Finally, you may hand deliver comments to the Fish and Wildlife Service office listed above (*see* **ADDRESSES** section).

Before including your address, telephone number, e-mail address, or other personal identifying information in your comments, you should be aware that your entire comment—including your personal identifying information—may be made publicly available at any time. While you can ask us in your comments to withhold your personal identifying information from public review, we cannot guarantee that we will be able to do so. There may also be other circumstances in which we would withhold from the administrative record a respondent's identity, as allowable by law. If you wish us to withhold your name and address, you must state this prominently at the beginning of your comments. We will not, however, consider anonymous comments. We will make all submissions from organizations or businesses, and from individuals identifying themselves as representatives or officials of organizations or businesses, available for public inspection in their entirety.

Applicant: William Waddell, Point Defiance Zoo and Aquarium, Tacoma, Washington, TE834070

The applicant requests renewed authorization to receive, retain, transfer, and harass the red wolf (*Canis rufus*) as required to conduct captive breeding and recovery programs for the species.

Applicant: Appalachian Technical Services, Wise, Kentucky, TE009638

The applicant requests authorization to capture, handle, radio-tag, and release Indiana bats (*Myotis sodalis*), gray bats (*Myotis grisescens*), and Virginia big-eared bats (*Corynorhinus townsendii virginianus*), for presence/absence surveys and scientific research.

Applicant: Benjamin Laester, Whittier, North Carolina, TE121142

The applicant requests renewed authorization to capture and handle the Indiana bat throughout its range in western North Carolina.

Applicant: Neil Turner, Turner Technology, Inc., Prestonsburg, Kentucky, TE210424

The applicant requests authorization to capture, handle, release, and use acoustical monitoring procedures to determine the presence of the Indiana bat in Kentucky.

Applicant: Susan Loeb, U.S. Forest Service, Clemson, South Carolina, TE119937

The applicant requests renewed authorization to capture, handle, release, and radio-tag Indiana bat in the following locations: Cherokee National Forest and Great Smoky Mountains National Park, Tennessee; Nantahala and Pisgah National Forests and Gold Mountain Gamelands, North Carolina.

Applicant: Roy S. DeLotelle, DeLotelle and Guthrie, Inc., Gainesville, Florida, TE825431

The applicant requests renewed authorization to capture, band, translocate, and monitor red-cockaded woodpeckers (*Picoides borealis*) throughout the range of the species in Florida, Georgia, South Carolina, North Carolina, Alabama, Mississippi, Tennessee, Arkansas, Texas, Oklahoma, Virginia, and Louisiana.

Applicant: North Louisiana National Wildlife Refuge Complex, Farmerville, Louisiana, TE9297A

The applicant requests authorization to trap, band, relocate and create artificial nesting cavities for red-cockaded woodpeckers throughout Louisiana and Arkansas.

Applicant: Audubon Nature Institute, New Orleans, Louisiana, TE077865

The permittee requests renewed authorization to harass and release to the wild Mississippi sandhill crane (*Grus canadensis pulla)* and whooping crane (*Grus americana*).

Applicant: Barbara Allen, Gulf Shores, Alabama, TE125557

The applicant requests renewed authorization to take, for scientific purposes and to enhance recovery efforts, Alabama beach mouse (*Peromyscus polionotus ammobates*), and three species of sea turtles: Kemp's ridley (*Lepidochelys kempii*), green (*Chelonia mydas*), and loggerhead (*Caretta caretta*).

Applicant: National Oceanic and Atmospheric Administration, National Marine Fisheries Service, Southeast Fisheries Science Center, Miami, Florida TE676379

The applicant requests renewed authorization to take (harass, capture, tag, track, salvage, collect biological samples, and euthanize) Kemp's ridley, hawksbill (*Eretmochelys imbracata*), leatherback (*Dermochelys coriacea*), green, loggerhead, and olive ridley (*Lepidochelys olivacea*) sea turtles for scientific purposes, enhancement of propagation or survival, recovery activities, and veterinary treatment in Virginia, North Carolina, South Carolina, Georgia, Florida, Alabama, Mississippi, Louisiana, Texas, Puerto Rico, U.S. Virgin Islands, the Gulf of Mexico, and the Northwestern Atlantic Ocean.

Applicant: Carol Johnston, Auburn, Alabama, TE178666

The applicant requests authorization to survey Coldwater Spring, Calhoun County, Alabama, to determine presence, habitat use, and diet of banded sculpin (*Cottus carolinae*) and pygmy sculpin (*Cottus paulus*) via snorkeling and stomach content analysis.

Applicant: Register-Nelson, Inc., Stockbridge, Georgia, TE114088

The applicant requests renewed authorization to capture, identify, and release blue shiner (*Cyprinella caerulea*), Etowah darter (*Etheostoma etowahae*), Cherokee darter (*Etheostoma scotti*), amber darter (*Percina antesella*), goldline darter (*Percina aurolineata*), snail darter (*Percina tanasi*), and Conasauga logperch (*Percina jenkinsi*) in Georgia. The applicant requests to amend the permit to include the capture, identification, and release of eastern indigo snake (*Drymarchon corais couperi*), reticulated flatwoods salamander (*Ambystoma bishopi*), and frosted flatwoods salamander (*Ambystoma cingulatum*) in Georgia.

Applicant: Jess Jones, Blacksburg Virginia, TE108813

The applicant requests authorization to conduct restoration activities and translocate the oyster mussel (*Epioblasma capsaeformis*) from the Clinch River in Tennessee upstream into Virginia.

Applicant: Campbellsville University, Campbellsville, Kentucky, TE12106

The applicant requests authorization to survey for the following freshwater mussels: ringpink (*Obovaria retusa*), fanshell (*Cyprogenia stegaria*), pocketbook (*Lampsilis ovata*), clubshell (*Pleurobema clava*), rough pigtoe (*Pleurobema plenum*), snuffbox (*Epioblasma triquetra*), and rabbitsfoot (*Quadrula cylindrica*).

Applicant: Ecological Resource Consultants, Inc., Panama City Beach, Florida, TE08988A

The applicant requests authorization to capture and release the following freshwater mussels while conducting presence/absence surveys in the Apalachicola, Chattahoochee, Flint, Chipola, Econfina, and Ochlockonee River Watersheds in Alabama, Georgia, and Florida: oval pigtoe (*Pleurobema pyriforme*), Gulf moccasinshell (*Medionidus penicillatus*), Chipola slabshell (*Elliptio chipolaensis*), purple bankclimber (*Elliptoideus solatianus*), shiny-rayed pocketbook (*Hamiota [=Lampsilis] subangulata*), fat threeridge (*Amblema neislerii*), and the Ochlockonee moccasinshell (*Medionidus simpsonianus*).

Applicant: Mark Hughes, Biological Integrity, LLC., Bainbridge, Georgia, TE12315A

The applicant requests authorization to capture and release the following freshwater mussels while conducting presence/absence surveys in the Apalachicola, Chattahoochee, Flint, Chipola, Econfina, and Ochlockonee River Watersheds in Alabama, Georgia, and Florida: oval pigtoe (*Pleurobema pyriforme*), Gulf moccasinshell (*Medionidus penicillatus*), Chipola slabshell (*Elliptio chipolaensis*), purple bankclimber (*Elliptoideus solatianus*), shiny-rayed pocketbook (*Hamiota [=Lampsilis] subangulata*), fat threeridge (*Amblema neislerii*), the Ochlockonee moccasinshell (*Medionidus simpsonianus*), and the Alabama moccasinshell (*Medionidus acutissimus*).

Applicant: U.S. Geological Survey, Georgia Cooperative Fish and Wildlife Research Unit, Athens, Georgia, TE10239A

The applicant requests authorization to capture freshwater mussels from the lower Flint River basin, Georgia, and temporarily hold them to collect hemolymph and tissue samples, evaluate fish hosts and develop propagation techniques for the oval pigtoe, Gulf moccasinshell, purple bankclimber, shiny-rayed pocketbook, and fat threeridge.

Applicant: Monte McGregor, Center for Mollusk Conservation, Kentucky Department of Fish and Wildlife Resources, Frankfort, Kentucky, TE178815

The applicant requests authorization to capture, propagate, and release multiple species of freshwater mussels (Family Unionidae) throughout their respective ranges (as collected opportunistically and based upon recovery needs).

Applicant: Dr. Kevin J. Roe, Iowa State University, TE040423

The applicant requests renewed authorization to collect tissue samples from Kentucky cave shrimp (*Palaemonias ganteri*) within Mammoth Cave National Park, Kentucky, for genetic evaluation.

Applicant: Stanley Rudzinski, Law Engineering and Environmental Services, Mt. Juliet, Tennessee, TE021030

The applicant requests authorization to capture and release Nashville crayfish, *(Orconectes shoupi)* during presence/absence surveys in the Mill Creek drainage, Davidson and Williamson counties, Tennessee.

Applicant: Norman Wagoner, Ouachita National Forest, Hot Springs, Arkansas, TE125605

The applicant requests renewed authorization to capture and release the American burying beetle (*Nicrophorus americanus*) while conducting inventory and monitoring surveys within the boundaries of Ouachita National Forest and Ozark-St. Francis National Forest, Arkansas and Oklahoma.

Applicant: Burns and McDonnell Engineering Company, Kansas City, Missouri, TE125620

The applicant requests renewed authorization to take the American burying beetle while conducting presence/absence surveys in Crawford, Sebastian, Franklin, Logan, and Scott counties, Arkansas.

Applicant: Archbold Expeditions, Venus, Florida, TE088035

The applicant requests renewed authorization to take or harass the following species during prescribed burn activities in Highlands County, Florida: Scrub mint (*Dicerandra frutescens*), snakeroot (*Eryngium cuneifolium),* Highland's scrub hypernicum (*Hypericum cumulicola*), scrub blazing star (*Liatria ohlingerae),* Britton's beargrass *(Nolina brittoniana*), wireweed (*Polygonella basiramia),* sandlace (*Polygonella myriophylla*), scrub plum (*Prunus geniculata*), Carter's mustard (*Warea carteri)* and Florida panther (*Puma concolor coryi*).

Applicant: Fort Jackson Military Reservation, Fort Jackson, South Carolina, TE183402

The applicant requests authorization to collect and sow seeds of smooth coneflower, (*Echinacea laevigata*) on Fort Jackson Military Reservation.

Applicant: Fairchild Tropical Botanic Garden, Miami, Florida, TE114069

The applicant requests renewed authorization to conduct presence/absence and mapping surveys, collect seeds and/or cuttings, and test the impact of canopy reduction on growth and reproduction of the endangered Key tree cactus (*Pilosocereus robinii*) in Monroe County, Florida.

Applicant: Florida Gas Transmission Company, LLC, Houston, Texas, TE139464

The applicant requests authorization to: Capture and release eastern indigo snake, frosted flatwood salamander, reticulated flatwoods salamander, gopher tortoise (*Gopherus polyphemus*), bluetail mole skink (*Eumeces egregius lividus*), and sand skink (*Neoseps reynoldsi*) and collect plants or plant parts of Highlands scrub Hypericum, Britton's beargrass, papery whitlow-wort (*Paronychia chartacea*), wireweed,

and Carter's mustard. Activities may occur within the following counties: Alabama—Mobile, Baldwin, and Escambia; and Florida—Escambia, Santa Rosa, Okaloosa, Walton, Washington, Jackson, Bay, Calhoun, Gadsden, Leon, Jefferson, Taylor, Lafayette, Madison, Suwannee, Gilchrist, Levy, Citrus, Hernando, Pasco, Hillsborough, Manatee, De Soto, Highlands, Okeechobee, Martin, and Miami-Dade counties.

Dated: May 14, 2010.

Jacquelyn B. Parrish,

Acting Regional Director.

[FR Doc. 2010–13404 Filed 6–3–10; 8:45 am]

BILLING CODE 4310–55–P

INTERNATIONAL TRADE COMMISSION

[USITC SE–10–018]

Sunshine Act Meeting Notice

AGENCY HOLDING THE MEETING: United States International Trade Commission.

TIME AND DATE: June 10, 2010 at 11 a.m.

PLACE: Room 101, 500 E Street, SW., Washington, DC 20436, Telephone: (202) 205–2000.

STATUS: Open to the public.

MATTERS TO BE CONSIDERED:

1. Agenda for future meetings: none.
2. Minutes.
3. Ratification List.
4. Inv. Nos. 701–TA–464 and 731–TA–1160 (Final) (Prestressed Concrete Steel Wire Strand from China)—briefing and vote. (The Commission is currently scheduled to transmit its determinations and Commissioners' opinions to the Secretary of Commerce on or before June 22, 2010.)
5. Outstanding action jackets: none.

In accordance with Commission policy, subject matter listed above, not disposed of at the scheduled meeting, may be carried over to the agenda of the following meeting.

Issued: June 1, 2010.

By order of the Commission.

William R. Bishop,

Hearings and Meetings Coordinator.

[FR Doc. 2010–13551 Filed 6–2–10; 4:15 pm]

BILLING CODE 7020–02–P

DEPARTMENT OF JUSTICE

Office of Justice Programs

[OJP (BJA) Docket No. 1520]

Meeting of the Department of Justice's (DOJ's) National Motor Vehicle Title Information System (NMVTIS) Federal Advisory Committee

AGENCY: Office of Justice Programs (OJP), Justice.

ACTION: Notice of meeting.

SUMMARY: This is an announcement of a meeting of DOJ's National Motor Vehicle Title Information System (NMVTIS) Federal Advisory Committee to discuss the role of the NMVTIS Federal Advisory Committee Members and various issues relating to the operation and implementation of NMVTIS.

DATES: The meeting will take place on Tuesday, June 22, 2010 from 8:30 a.m. to 4:30 p.m. ET and on Wednesday, June 23, 2010 from 8:30 a.m. to 12 p.m. ET.

ADDRESSES: The meeting will take place at the Bureau of Justice Assistance, Office of Justice Programs, 810 7th Street, NW., Washington, DC 20531; *Phone:* (202) 305–1661.

FOR FURTHER INFORMATION CONTACT: Alissa Huntoon, Designated Federal Employee (DFE), Bureau of Justice Assistance, Office of Justice Programs, 810 7th Street, NW., Washington, DC 20531; *Phone:* (202) 305–1661 [**Note:** This is not a toll-free number]; *E-mail: Alissa.Huntoon@usdoj.gov.*

SUPPLEMENTARY INFORMATION: This meeting is open to the public. Due to security measures, however, members of the public who wish to attend this meeting must register with Ms. Alissa Huntoon at the above address at least seven (7) days in advance of the meeting. Registrations will be accepted on a space available basis. Access to the meeting will not be allowed without registration. All attendees will be required to sign in at the security desk. Please bring photo identification and allow extra time prior to the meeting. Interested persons whose registrations have been accepted may be permitted to participate in the discussions at the discretion of the meeting chairman and with approval of the DFE.

Anyone requiring special accommodations should notify Ms. Huntoon at least seven (7) days in advance of the meeting.

Purpose

The NMVTIS Federal Advisory Committee will provide input and recommendations to the Office of Justice Programs (OJP) regarding the operations and administration of NMVTIS. The primary duties of the NMVTIS Federal Advisory Committee will be to advise the Bureau of Justice Assistance (BJA) Director on NMVTIS-related issues, including but not limited to: Implementation of a system that is self-sustainable with user fees; options for alternative revenue-generating opportunities; determining ways to enhance the technological capabilities of the system to increase its flexibility; and options for reducing the economic burden on current and future reporting entities and users of the system.

Alissa Huntoon,

Bureau of Justice Assistance. Office of Justice Programs.

[FR Doc. 2010–13456 Filed 6–3–10; 8:45 am]

BILLING CODE 4410–18–P

DEPARTMENT OF JUSTICE

Antitrust Division

Notice Pursuant to the National Cooperative Research and Production Act of 1993—Pistoia Alliance, Inc.

Notice is hereby given that, on April 22, 2010, pursuant to Section 6(a) of the National Cooperative Research and Production Act of 1993, 15 U.S.C. 4301 *et seq.* ("the Act"), Pistoia Alliance, Inc. has filed written notifications simultaneously with the Attorney General and the Federal Trade Commission disclosing changes in its membership. The notifications were filed for the purpose of extending the Act's provisions limiting the recovery of antitrust plaintiffs to actual damages under specified circumstances. Specifically, Genome Quest, Westborough, MA; SciencePoint Solutions, Redmond, WA; IO–Informatics, Berkeley, CA; Ariadne Genomics, Rockville, MD; and Cognizant Technology Solutions, London, UNITED KINGDOM, have been added as parties to this venture.

No other changes have been made in either the membership or planned activity of the group research project. Membership in this group research project remains open, and Pistoia Alliance, Inc. intends to file additional written notifications disclosing all changes in membership.

On May 28, 2009, Pistoia Alliance, Inc. filed its original notification pursuant to Section 6(a) of the Act. The Department of Justice published a notice in the **Federal Register** pursuant to Section 6(b) of the Act on July 15, 2009 (74 FR 34364).

The last notification was filed with the Department on January 27, 2010. A notice was published in the **Federal Register** pursuant to Section 6(b) of the Act on March 10, 2010 (75 FR 11197).

Patricia A. Brink,

Deputy Director of Operations, Antitrust Division.

[FR Doc. 2010–13309 Filed 6–3–10; 8:45 am]

BILLING CODE 4410–11–M

DEPARTMENT OF JUSTICE

Antitrust Division

Notice Pursuant to the National Cooperative Research and Production Act of 1993—INS Global Learning Consortium, Inc.

Notice is hereby given that, on April 26, 2010, pursuant to Section 6(a) of the National Cooperative Research and Production Act of 1993, 15 U.S.C. 4301 *et seq.* ("the Act"), INS Global Learning Consortium, Inc. has filed written notifications simultaneously with the Attorney General and the Federal Trade Commission disclosing changes in its membership. The notifications were filed for the purpose of extending the Act's provisions limiting the recovery of antitrust plaintiffs to actual damages under specified circumstances. Specifically, Accessible Portable Item Profile Project, Newton, MA; Fundacao Getulio Vargas, Centro Rio de Janeiro, BRAZIL; Kyung Hee Cyber University, Seoul, REPUBLIC OF KOREA; and Turning Technologies, Youngstown, OH, have been added as parties to this venture. Also, National Association of College Stores, Oberlin, OH, has withdrawn as a party to this venture.

No other changes have been made in either the membership or planned activity of the group research project. Membership in this group research project remains open, and IMS Global Learning Consortium, Inc. intends to file additional written notifications disclosing all changes in membership.

On April 7, 2000, INS Global Learning Consortium, Inc. filed its original notification pursuant to Section 6(a) of the Act. The Department of Justice published a notice in the **Federal Register** pursuant to Section 6(b) of the Act on September 13, 2000 (65 FR 55283).

The last notification was filed with the Department on February 16, 2010. A notice was published in the **Federal Register** pursuant to Section 6(b) of the Act on March 24, 2010 (75 FR 14191) .

Patricia A. Brink,

Deputy Director of Operations, Antitrust Division.

[FR Doc. 2010–13310 Filed 6–3–10; 8:45 am]

BILLING CODE M

DEPARTMENT OF JUSTICE

Antitrust Division

Notice Pursuant to the National Cooperative Research and Production Act of 1993—Diesel After Treatment Accelerated Aging Cycles—Heavy-Duty

Notice is hereby given that, on May 12, 2010, pursuant to Section 6(a) of the National Cooperative Research and Production Act of 1993, 15 U.S.C. 4301 *et seq.* ("the Act"), Southwest Research Institute—Cooperative Research Group on Diesel After treatment Accelerated Aging Cycles—Heavy-Duty ("DAAAC–HD") has filed written notifications simultaneously with the Attorney General and the Federal Trade Commission disclosing changes in its membership. The notifications were filed for the purpose of extending the Act's provisions limiting the recovery of antitrust plaintiffs to actual damages under specified circumstances. Specifically, GE Transportation, Erie, PA, has been added as a party to this venture.

No other changes have been made in either the membership or planned activity of the group research project. Membership in this group remains open, and DAAAC–HD intends to file additional written notifications disclosing all changes in membership.

On February 2, 2009, DAAAC–HD filed its original notification pursuant to Section 6(a) of the Act. The Department of Justice published a notice in the **Federal Register** pursuant to Section 6(b) of the Act on February 26, 2009 (74 FR 8813).

The last notification was filed with the Department on February 23, 2010. A notice was published in the **Federal Register** pursuant to Section 6(b) of the Act on March 24, 2010 (75 FR 14191).

Patricia A. Brink,

Deputy Director of Operations, Antitrust Division.

[FR Doc. 2010–13311 Filed 6–3–10; 8:45 am]

BILLING CODE 4410–11–M

NATIONAL ARCHIVES AND RECORDS ADMINISTRATION

Records Schedules; Availability and Request for Comments

AGENCY: National Archives and Records Administration (NARA).

ACTION: Notice of availability of proposed records schedules; request for comments.

SUMMARY: The National Archives and Records Administration (NARA) publishes notice at least once monthly of certain Federal agency requests for records disposition authority (records schedules). Once approved by NARA, records schedules provide mandatory instructions on what happens to records when no longer needed for current Government business. They authorize the preservation of records of continuing value in the National Archives of the United States and the destruction, after a specified period, of records lacking administrative, legal, research, or other value. Notice is published for records schedules in which agencies propose to destroy records not previously authorized for disposal or reduce the retention period of records already authorized for disposal. NARA invites public comments on such records schedules, as required by 44 U.S.C. 3303a(a).

DATES: Requests for copies must be received in writing on or before July 6, 2010. Once the appraisal of the records is completed, NARA will send a copy of the schedule. NARA staff usually prepare appraisal memorandums that contain additional information concerning the records covered by a proposed schedule. These, too, may be requested and will be provided once the appraisal is completed. Requesters will be given 30 days to submit comments.

ADDRESSES: You may request a copy of any records schedule identified in this notice by contacting the Life Cycle Management Division (NWML) using one of the following means:

Mail: NARA (NWML), 8601 Adelphi Road, College Park, MD 20740–6001.

E-mail: request.schedule@nara.gov.

FAX: 301–837–3698.

Requesters must cite the control number, which appears in parentheses after the name of the agency which submitted the schedule, and must provide a mailing address. Those who desire appraisal reports should so indicate in their request.

FOR FURTHER INFORMATION CONTACT: Laurence Brewer, Director, Life Cycle Management Division (NWML), National Archives and Records

Administration, 8601 Adelphi Road, College Park, MD 20740–6001. Telephone: 301–837–1539. E-mail: *records.mgt@nara.gov.*

SUPPLEMENTARY INFORMATION: Each year Federal agencies create billions of records on paper, film, magnetic tape, and other media. To control this accumulation, agency records managers prepare schedules proposing retention periods for records and submit these schedules for NARA's approval, using the Standard Form (SF) 115, Request for Records Disposition Authority. These schedules provide for the timely transfer into the National Archives of historically valuable records and authorize the disposal of all other records after the agency no longer needs them to conduct its business. Some schedules are comprehensive and cover all the records of an agency or one of its major subdivisions. Most schedules, however, cover records of only one office or program or a few series of records. Many of these update previously approved schedules, and some include records proposed as permanent.

The schedules listed in this notice are media neutral unless specified otherwise. An item in a schedule is media neutral when the disposition instructions may be applied to records regardless of the medium in which the records are created and maintained. Items included in schedules submitted to NARA on or after December 17, 2007, are media neutral unless the item is limited to a specific medium. (See 36 CFR 1225.12(e).)

No Federal records are authorized for destruction without the approval of the Archivist of the United States. This approval is granted only after a thorough consideration of their administrative use by the agency of origin, the rights of the Government and of private persons directly affected by the Government's activities, and whether or not they have historical or other value.

Besides identifying the Federal agencies and any subdivisions requesting disposition authority, this public notice lists the organizational unit(s) accumulating the records or indicates agency-wide applicability in the case of schedules that cover records that may be accumulated throughout an agency. This notice provides the control number assigned to each schedule, the total number of schedule items, and the number of temporary items (the records proposed for destruction). It also includes a brief description of the temporary records. The records schedule itself contains a full description of the records at the file unit level as well as their disposition. If NARA staff has prepared an appraisal memorandum for the schedule, it too includes information about the records. Further information about the disposition process is available on request.

Schedules Pending

1. Department of Agriculture, Office of the Secretary (N1–16–09–1, 3 items, 3 temporary items). Web site records, including web management and operations files, logs, and web content that is not unique. Unique web content will be managed in accordance with previously approved schedules or schedules that will be submitted in the future.

2. Department of Agriculture, Agricultural Research Service (N1–310–09–4, 3 items, 3 temporary items). Agency web site records, including web management and operations files, logs, and web content that is not unique. Unique web content will be managed in accordance with previously approved schedules or schedules that will be submitted in the future.

3. Department of Agriculture, Economic Research Service (N1–354–09–2, 3 items, 3 temporary items). Agency web site records, including web management and operations files, logs, and web content that is not unique. Unique web content will be managed in accordance with previously approved schedules or schedules that will be submitted in the future.

4. Department of Agriculture, National Agricultural Statistical Service (N1–355–09–1, 3 items, 3 temporary items). Agency web site records, including web management and operations files, logs, and web content that is not unique. Unique web content will be managed in accordance with previously approved schedules or schedules that will be submitted in the future.

5. Department of Agriculture, Natural Resources Conservation Service (N1–114–10–1, 3 items, 3 temporary items). Agency web site records, including web management and operations files, logs, and web content that is not unique. Unique web content will be managed in accordance with previously approved schedules or schedules that will be submitted in the future.

6. Department of Agriculture, Research, Education, and Extension Service (N1–540–08–1, 12 items, 12 temporary items). Records relating to the 4–H program. Included are records relating to peer review of such matters as curricula, proposals, and workshops, and to authorizations to use the 4–H emblem.

7. Department of Agriculture, Risk Management Agency (N1–258–09–9, 1 item, 1 temporary item). Master files of an electronic information system relating to accounting matters.

8. Department of the Army, Agency-wide (N1–AU–10–22, 1 item, 1 temporary item). Master files of an electronic information system that includes unit promotion eligibility rosters for enlisted personnel in grades E–1 through E–3.

9. Department of Education, Federal Student Aid (N1–441–09–17, 2 items, 2 temporary items). Files relating to pilot projects that explore the use of new technologies and procedures aimed at improving student aid programs. Also included are master files of an electronic information system that contains data submitted by schools that relate to initiatives under which schools are granted exemptions from requirements governing student aid in order to improve services and procedures.

10. Department of Education, Office for Civil Rights (N1–441–09–14, 1 item, 1 temporary item). Records relating to requests for exemptions from requirements prohibiting gender discrimination submitted by sororities, fraternities, and religious groups at educational institutions.

11. Department of Housing and Urban Development, Federal National Mortgage Association (N1–207–08–1, 12 items, 10 temporary items). Correspondence relating to mortgages, budget files, agreements, vouchers and other records that date from the 1930s to 1971 and are stored at the Washington National Records Center. Proposed for permanent retention are correspondence files relating to insured mortgages and Audit Branch subject files. The proposed disposition instructions are limited to paper records.

12. Department of Housing and Urban Development, Office of Single Family Housing (N1–207–09–4, 1 item, 1 temporary item). Master files of an electronic information system that contains data concerning real estate settlements in connection with the Real Estate Settlement Procedures Act of 1974.

13. Department of Justice, Office of the Inspector General (N1–60–09–48, 2 items, 2 temporary items). Master files and inputs associated with an electronic information system that contains data concerning expenditures in connection with financial and performance audits.

14. Department of Labor, Occupational Safety and Health

Administration (N1–100–08–1, 2 items, 1 temporary item). Background materials used to prepare the Secretary of Labor's annual report to the President on the occupational safety and health of Federal employees. The report itself along with the Secretary's transmittal are proposed for permanent retention.

15. Department of State, Bureau of Educational and Cultural Affairs (N1–59–09–29, 1 item, 1 temporary item). Master files associated with an electronic information system that contains statistical data concerning academic and cultural exchange programs. Key data from these records is included in another electronic information system that has been proposed for permanent retention.

16. Department of State, Bureau of Educational and Cultural Affairs (N1–59–09–31, 2 items, 2 temporary items). Master files and outputs associated with an electronic information system that contains data of agency academic exchange programs, including personal information on applicants, grantee institution, grant country, and start and end dates.

17. Department of State, Bureau of Educational and Cultural Affairs (N1–59–09–32, 2 items, 2 temporary items). Master files and outputs associated with an electronic information system that contains data of agency professional, youth, athletic, and cultural exchanges. Included is data concerning such matters as sponsoring organization, nature of the exchange, and personal information about the participants.

18. Department of State, Bureau of Educational and Cultural Affairs (N1–59–09–34, 2 items, 2 temporary items). Master files and outputs associated with an electronic information system that contains data on visa applications made in connection with exchange programs.

19. Department of State, Bureau of International Information Programs (N1–59–09–12, 10 items, 4 temporary items). Records of the Office of Publications including administrative records and abstracts of articles. Proposed for permanent retention are policy and program records, articles, periodicals, pamphlets, and other publications, and posters and other visual materials.

20. Department of the Treasury, Internal Revenue Service (N1–58–09–60, 2 items, 2 temporary items). Master files and system documentation associated with an electronic information system used to calculate Tax Year 2005 tax credits for taxpayers affected by Hurricane Katrina.

21. Department of the Treasury, Internal Revenue Service (N1–58–09–92, 2 items, 2 temporary items). Master files and system documentation associated with an electronic information system used to process business tax returns.

22. Federal Communications Commission, Public Safety and Homeland Security Bureau (N1–173–10–1, 2 items, 2 temporary items). Master files and outputs associated with an electronic information system used by communications providers to report on significant disruptions or outages.

23. Federal Communications Commission, Public Safety and Homeland Security Bureau (N1–173–10–2, 4 items, 4 temporary items). Master files and outputs associated with an electronic information system used by communications providers to provide information regarding the operational status of communications networks in the event of a disaster.

24. Nuclear Regulatory Commission, Office of the Chief Financial Officer (N1–431–10–1, 1 item, 1 temporary item). Master files of an electronic information system that is used to manage agency financial matters.

25. Office of the Director of National Intelligence, National Counterproliferation Center (N1–576–08–6, 20 items, 9 temporary items). Administrative records including such files as meeting planning records, weekly and bi-weekly reports, and non-substantive working papers. Proposed for permanent retention are such records as the files of the director and deputy director, records of working groups, subject files, and substantive working papers.

Dated: May 27, 2010.

Michael J. Kurtz,

Assistant Archivist for Records Services—Washington, DC.

[FR Doc. 2010–13477 Filed 6–3–10; 8:45 am]

BILLING CODE 7515–01–P

NATIONAL LABOR RELATIONS BOARD

Sunshine Act Meetings

TIME AND DATES: All meetings are held at 2:30 p.m., with the exception of the meeting on June 2, which begins at 1:30 p.m. Wednesday, June 2; Wednesday, June 9; Wednesday, June 16; Wednesday, June 23; Wednesday, June 30, 2010.

PLACE: Board Agenda Room, No. 11820, 1099 14th St., NW., Washington, DC 20570.

STATUS: Closed.

MATTERS TO BE CONSIDERED: Pursuant to § 102.139(a) of the Board's Rules and Regulations, the Board or a panel thereof will consider "the issuance of a subpoena, the Board's participation in a civil action or proceeding or an arbitration, or the initiation, conduct, or disposition * * * of particular representation or unfair labor practice proceedings under section 8, 9, or 10 of the [National Labor Relations] Act, or any court proceedings collateral or ancillary thereto." *See* also 5 U.S.C. 552b(c)(10).

CONTACT PERSON FOR MORE INFORMATION: Lester A. Heltzer, Executive Secretary, (202) 273–1067.

Dated: June 2, 2010.

Lester A. Heltzer,

Executive Secretary.

[FR Doc. 2010–13583 Filed 6–2–10; 4:15 pm]

BILLING CODE 7545–01–P

NATIONAL SCIENCE FOUNDATION

National Science Board; Committee on Strategy and Budget; Sunshine Act Meetings; Notice

The National Science Board's Committee on Strategy and Budget, pursuant to NSF regulations (45 CFR part 614), the National Science Foundation Act, as amended (42 U.S.C. 1862n–5), and the Government in the Sunshine Act (5 U.S.C. 552b), hereby gives notice in regard to the scheduling of meetings for the transaction of National Science Board business and other matters specified, as follows:

DATE AND TIME: Tuesday, June 15, 2010 at 12 Noon.

SUBJECT MATTER: Discussion of proposed NSF budgets and other committee business as reflected in the notice of closure and certification found at: *http://www.nsf.gov/nsb/meetings/2010/0615/closing.pdf.*

STATUS: Closed.

This meeting will be held by teleconference originating at the National Science Board Office, National Science Foundation, 4201 Wilson Blvd., Arlington, VA 22230. Please refer to the National Science Board Web site (*http://www.nsf.gov/nsb*) for information or schedule updates, or contact: Jennie Moehlmann, National Science Foundation, 4201 Wilson Blvd., Arlington, VA 22230. Telephone: (703) 292–7000.

Ann Ferrante,

Writer-Editor.

[FR Doc. 2010–13504 Filed 6–2–10; 11:15 am]

BILLING CODE 7555–01–P

NATIONAL SCIENCE FOUNDATION

Notice of Permits Issued Under the Antarctic Conservation Act of 1978

AGENCY: National Science Foundation.

ACTION: Notice of permits issued under the Antarctic Conservation of 1978, Public Law 95–541.

SUMMARY: The National Science Foundation (NSF) is required to publish notice of permits issued under the Antarctic Conservation Act of 1978. This is the required notice.

FOR FURTHER INFORMATION CONTACT: Nadene G. Kennedy, Permit Office, Office of Polar Programs, Rm. 755, National Science Foundation, 4201 Wilson Boulevard, Arlington, VA 22230.

SUPPLEMENTARY INFORMATION: On April 28, 2010, the National Science Foundation published a notice in the **Federal Register** of a permit application received. A permit was issued on May 28, 2010 to: David Ainley; Permit No. 2011–002.

Nadene G. Kennedy,

Permit Officer.

[FR Doc. 2010–13410 Filed 6–3–10; 8:45 am]

BILLING CODE 7555–01–P

OFFICE OF PERSONNEL MANAGEMENT

Privacy Act of 1974; Computer Matching Program

AGENCY: Office of Personnel Management.

AGENCY: Notice—computer matching between the Office of Personnel Management and the Social Security Administration.

SUMMARY: In accordance with the Privacy Act of 1974 (5 U.S.C. 552a), as amended by the Computer Matching and Privacy Protection Act of 1988 (Pub. L. 100–503), Office of Management and Budget (OMB) Guidelines on the Conduct of Matching Programs (54 FR 25818 published June 19, 1989), and OMB Circular No. A–130, revised November 28, 2000, "Management of Federal Information Resources," the Office of Personnel Management (OPM) is publishing notice of its new computer matching program with the Social Security Administration (SSA).

DATES: OPM will file a report of the subject matching program with the Committee on Homeland Security and Governmental Affairs of the Senate, the Committee on Oversight and Government Reform of the House of Representatives and the Office of Information and Regulatory Affairs, Office of Management and Budget (OMB). The matching program will begin 30 days after the **Federal Register** notice has been published or 40 days after the date of OPM's submissions of the letters to Congress and OMB, whichever is later. The matching program will continue for 18 months from the beginning date and may be extended an additional 12 months thereafter. Subsequent matches will run until one of the parties advises the other in writing of its intention to reevaluate, modify and/or terminate the agreement.

ADDRESSES: Send comments to Marc Flaster, Chief, Resource Management, Retirement and Benefits, Office of Personnel Management, Room 4332, 1900 E. Street, NW., Washington, DC 20415.

FOR FURTHER INFORMATION CONTACT: James Sparrow on (202) 606–1803.

SUPPLEMENTARY INFORMATION:

A. General

The Privacy Act (5 U.S.C. 552a), as amended, establishes the conditions under which computer matching involving the Federal government could be performed and adds certain protections for individuals applying for and receiving Federal benefits. Section 7201 of the Omnibus Budget Reconciliation Act of 1990 (Pub. L. 101–508) further amended the Privacy Act regarding protections for such individuals.

The Privacy Act, as amended, regulates the use of computer matching by Federal agencies when records in a system of records are matched with other Federal, State, or local government records. Among other things, it requires *Federal agencies involved in computer matching programs to:*

(1) Negotiate written agreements with the other agency for agencies participating in the matching programs;

(2) Obtain the approval of the match agreement by the Data Integrity Boards (DIB) of the participating Federal agencies;

(3) Furnish detailed reports about matching programs to Congress and OMB;

(4) Notify applicants and beneficiaries that their records are subject to matching;

(5) Verify match findings before reducing, suspending, terminating or denying an individual's benefits or payments.

B. OPM Computer Matches Subject to the Privacy Act

We have taken action to ensure that all of OPM's computer matching programs comply with the requirements of the Privacy Act, as amended.

Notice of Computer Matching Program, Office of Personnel Management (OPM) With the Social Security Administration (SSA)

A. Participating Agencies

OPM and SSA

B. Purpose of the Matching Program

The purpose of this agreement is to establish the conditions under which SSA agrees to disclose tax return information to OPM. The SSA records will be used in a matching program in which OPM will match SSA's tax return records with OPM's records on disability retirees under age 60, disabled adult child survivors, certain retirees in receipt of a supplemental benefit under the Federal Employees Retirement System (FERS), and certain annuitants receiving a discontinued service retirement benefit under the Civil Service Retirement System (CSRS). By law, these annuitants and survivors are limited in the amount they can earn and still retain benefits paid to them. In the case of the discontinued service annuitants, retirement benefits cease upon re-employment in Federal service. OPM will use the SSA data to determine continued eligibility for benefits being paid.

C. Authority for Conducting the Matching Program

Chapters 83 and 84 of title 5 of the United States Code provide the basis for computing annuities under CSRS and FERS, respectively, and require release of information by SSA to OPM in order to administer data exchanges involving military service performed by an individual after December 31, 1956. The CSRS requirement is codified at section 8332(j) of title 5 of the United States Code; the FERS requirement is codified at section 8422(e)(4) of title 5 of the United States Code. The responsibilities of SSA and OPM with respect to information obtained pursuant to this agreement are also in accordance with the following: the Privacy Act (5 U.S.C. 552a), as amended; section 307 of the Omnibus Budget Reconciliation Act of 1982 (Pub. L. 97–253), codified at section 8332 of title 5 of the United States Code; section 1306(a) of title 42 of the United States Code; and section 6103(1)(11) of title 26 of the United States Code.

D. Categories of Records and Individuals Covered by the Match

SSA will disclose data from its MBR file (60–0090, Master Beneficiary Record, SSA/OEEAS) and MEF file (60–0059, Earnings Recording and Self-Employment Income System, SSA/

OEEAS) and manually-extracted military wage information from SSA's "1086" microfilm file when required (71 FR 1796, January 11, 2006). OPM will provide SSA with an electronic finder file from the OPM system of records published as OPM/Central-1, Civil Service Retirement and Insurance Records. The system of records involved have routine uses permitting the disclosures needed to conduct this match.

E. Privacy Safeguards and Security

The Privacy Act (5 U.S.C. 552a(o)(1)(G) requires that each matching agreement specify procedures for ensuring the administrative, technical and physical security of the records matched and the results of such programs. All Federal agencies are subject to: the Federal Information Security Management Act of 2002 (FISMA) (44 U.S.C. 3541 *et seq.*); related OMB circulars and memorandum (e.g. OMB Circular A–130 and OMB M–06–16); National Institute of Science and Technology (NIST) directives; and the Federal Acquisition Regulations (FAR). These laws, circulars, memoranda, directives and regulations include requirements for safeguarding Federal information systems and personally identifiable information used in Federal agency business processes, as well as related reporting requirements. OPM and SSA recognize that all laws, circulars, memoranda, directives and regulations relating to the subject of this agreement and published subsequent to the effective date of this agreement must also be implemented if mandated.

FISMA requirements apply to all Federal contractors and organizations or sources that process or use Federal information, or that operate, use, or have access to Federal information systems on behalf of an agency. OPM will be responsible for oversight and compliance of their contractors and agents. Both OPM and SSA reserve the right to conduct onsite inspection to monitor compliance with FISMA regulations.

F. Inclusive Dates of the Match

The matching program shall become effective upon the signing of the agreement by both parties to the agreement and approval of the agreement by the Data Integrity Boards of the respective agencies, but no sooner than 40 days after notice of the matching program is sent to Congress and OMB or 30 days after publication of this notice in the **Federal Register**, whichever is later. The matching program will continue for 18 months from the effective date and may be extended for an additional 12 months thereafter, if certain conditions are met.

U.S. Office of Personnel Management.

John Berry,

Director.

[FR Doc. 2010–13495 Filed 6–3–10; 8:45 am]

BILLING CODE 6325–38–P

POSTAL REGULATORY COMMISSION

Sunshine Act Meetings

TIME AND DATE: Wednesday, June 9, 2010 at 11:30 a.m.

PLACE: Commission's main conference room, 901 New York Avenue, NW., Suite 200, Washington, DC 20268–0001.

STATUS: This meeting will be closed to the public.

MATTERS TO BE CONSIDERED:

1. Personnel: consideration of candidates for one or more officer-level positions (closed).
2. Personnel: discussion of staff-level vacancies (closed).
3. Contracts: discussion of confidential commercial information relative to Commission contracts (closed).

CONTACT PERSON FOR FURTHER INFORMATION: Brian Corcoran, Postal Regulatory Commission, at 202-789-6828 or *brian.corcoran@prc.gov.*

Dated: June 2, 2010.

Shoshana M. Grove,

Secretary.

[FR Doc. 2010–13553 Filed 6–2–10; 4:15 pm]

BILLING CODE 7710–FW–S

SECURITIES AND EXCHANGE COMMISSION

[Release No. IC–29290]

Notice of Applications for Deregistration Under Section 8(f) of the Investment Company Act of 1940

May 28, 2010.

The following is a notice of applications for deregistration under section 8(f) of the Investment Company Act of 1940 for the month of May, 2010. A copy of each application may be obtained via the Commission's Web site by searching for the file number, or an applicant using the Company name box, at *http://www.sec.gov/search/search.htm* or by calling (202) 551–8090. An order granting each application will be issued unless the SEC orders a hearing. Interested persons may request a hearing on any application by writing to the SEC's Secretary at the address below and serving the relevant applicant with a copy of the request, personally or by mail. Hearing requests should be received by the SEC by 5:30 p.m. on June 22, 2010, and should be accompanied by proof of service on the applicant, in the form of an affidavit or, for lawyers, a certificate of service. Hearing requests should state the nature of the writer's interest, the reason for the request, and the issues contested. Persons who wish to be notified of a hearing may request notification by writing to the Secretary, U.S. Securities and Exchange Commission, 100 F Street, NE., Washington, DC 20549–1090.

FOR FURTHER INFORMATION CONTACT: Diane L. Titus at (202) 551–6810, SEC, Division of Investment Management, Office of Investment Company Regulation, 100 F Street, NE., Washington, DC 20549–4041.

John Hancock Patriot Preferred Dividend Fund

[File No. 811–7590]

John Hancock Patriot Global Dividend Fund

[File No. 811–6685]

John Hancock Patriot Select Dividend Trust

[File No. 811–6107]

Summary: Each applicant, a closed-end investment company, seeks an order declaring that it has ceased to be an investment company. On May 29, 2007, June 4, 2007 and October 10, 2007, respectively, applicants transferred their assets to corresponding series of John Hancock Patriot Premium Dividend Fund II, based on net asset value. Each applicant also distributed preferred shares of Dutch Auction Rate Transferable Securities ("DARTS") of the acquiring fund to holders of applicants' Auction Rate Preferred Shares, DARTS, or Auction Market Preferred Shares, respectively, on the basis of their relative aggregate liquidation preference. Applicants paid $129,502, $138,610 and $216,419, respectively, of the expenses incurred in connection with the reorganizations.

Filing Date: The applications were filed on April 26, 2010.

Applicant's Address: 601 Congress St., Boston, MA 02210.

John Hancock Patriot Premium Dividend Fund I

[File No. 811–6182]

Summary: Applicant, a closed-end investment company, seeks an order

declaring that it has ceased to be an investment company. On June 25, 2007, applicant transferred its assets to corresponding series of John Hancock Patriot Premium Dividend Fund II, based on net asset value. Applicant also distributed Dutch Auction Rate Transferable Securities ("DARTS") of the acquiring fund to the holders of applicant's DARTS on the basis of their relative aggregate liquidation preference. Expenses of $124,002, $22,949 and $12,224 incurred in connection with the reorganization were paid by applicant, the acquiring fund, and John Hancock Advisers, LLC, applicant's investment adviser, respectively.

Filing Date: The application was filed on April 28, 2010.

Applicant's Address: 601 Congress St., Boston, MA 02210.

AIM Stock Funds

[File No. 811–1474]

Summary: Applicant seeks an order declaring that it has ceased to be an investment company. On April 30, 2008, applicant transferred its assets to AIM Dynamics Fund, a series of AIM Investment Securities Funds, based on net asset value. Expenses of $371,600 incurred in connection with the reorganization were paid by applicant and Invesco Advisers, Inc., applicant's investment adviser.

Filing Date: The application was filed on April 23, 2010.

Applicant's Address: 11 Greenway Plaza, Suite 100, Houston, TX 77046–1173.

Morgan Stanley Income Trust

[File No. 811–5654]

Morgan Stanley Limited Duration Fund

[File No. 811–7117]

Summary: Each applicant seeks an order declaring that it has ceased to be an investment company. On March 25, 2009, each applicant made a liquidating distribution to its shareholders, based on net asset value. Expenses of approximately $24,008 and $28,567, respectively, incurred in connection with the liquidations were paid by Morgan Stanley Investment Advisors Inc., applicants' investment adviser.

Filing Date: The applications were filed on April 21, 2010.

Applicants' Address: c/o Morgan Stanley Investment Advisors Inc., 522 Fifth Ave., New York, NY 10036.

Morgan Stanley Japan Fund

[File No. 811–7503]

Morgan Stanley Financial Services Trust

[File No. 811–7927]

Morgan Stanley Limited Term Municipal Trust

[File No. 811–7700]

Summary: Each applicant seeks an order declaring that it has ceased to be an investment company. On July 30, 2008, November 21, 2008 and March 18, 2009, respectively, each applicant made a liquidating distribution to its shareholders based on net asset value. Expenses of approximately $42,421, $84,488 and $19,872, respectively, incurred in connection with the liquidations were paid by Morgan Stanley Investment Advisors Inc., applicants' investment adviser.

Filing Date: The applications were filed on April 21, 2010.

Applicant's Address: c/o Morgan Stanley Investment Advisors Inc., 522 Fifth Ave., New York, NY 10036.

Nuveen Florida Investment Quality Municipal Fund

[File No. 811–6266]

Nuveen Florida Quality Income Municipal Fund

[File No. 811–6382]

Summary: Each applicant, a closed-end investment company, seeks an order declaring that it has ceased to be an investment company. On October 19, 2009, each applicant transferred its assets to Nuveen Premium Income Municipal Fund 2, Inc., based on net asset value. Shareholders of each applicant's municipal auction rate cumulative preferred shares ("preferred shares") received one share of the acquiring fund's preferred shares for each preferred share of that applicant. Total expenses of approximately $418,001 incurred in connection with the reorganizations were paid by applicants and the acquiring fund.

Filing Dates: The applications were filed on November 4, 2009, and amended on May 19, 2010.

Applicants' Address: 333 West Wacker Dr., Chicago, IL 60606.

Delafield Fund, Inc.

[File No. 811–8054]

Summary: Applicant seeks an order declaring that it has ceased to be an investment company. On September 28, 2009, applicant transferred its assets to The Delafield Fund, a series of The Tocqueville Trust, based on net asset value. Expenses of approximately $331,493 incurred in connection with the reorganization were paid by Reich & Tang Asset Management, LLC, applicant's investment adviser, and Tocqueville Asset Management, the surviving fund's investment adviser.

Filing Dates: The application was filed on March 11, 2010, and amended on May 17, 2010.

Applicant's Address: 600 Fifth Ave., New York, NY 10020.

Credit Suisse Alternative Capital Long/Short Equity Institutional Fund, LLC

[File No. 811–21641]

Credit Suisse Alternative Capital Multi-Strategy Institutional Fund, LLC

[File No. 811–21644]

Credit Suisse Alternative Capital Multi-Strategy Fund, LLC

[File No. 811–21657]

Credit Suisse Alternative Capital Long/Short Equity Fund, LLC

[File No. 811–21658]

Summary: Each applicant, a closed-end investment company, seeks an order declaring that it has ceased to be an investment company. Each applicant made a public offering of its securities from April 2005 until November 2009, at which time each applicant's board of managers determined to cease such offer. Each applicant has one remaining unitholder and one remaining investment which cannot be immediately liquidated. Applicants are not presently making a public offering of securities and do not propose to make a public offering. Each applicant will continue to operate in reliance on section 3(c)(1) of the Act.

Filing Dates: The applications were filed on February 24, 2010, and amended on May 6, 2010.

Applicants' Address: 11 Madison Ave., 13th Floor, New York, NY 10010.

Atlantic Whitehall Funds Trust

[File No. 811–8738]

Summary: Applicant seeks an order declaring that it has ceased to be an investment company. On July 13, 2009, applicant made a liquidating distribution to shareholders of two of its series, based on net asset value. On September 21, 2009, applicant's three remaining series transferred their assets to corresponding series of AIM Equity Funds and AIM Growth Series, based on net asset value. Expenses of $402,292 incurred in connection with the liquidation and reorganization were paid by Stein Roe Investment Counsel, Inc., applicant's investment adviser.

Filing Dates: The application was filed on January 6, 2010 and amended on April 19, 2010 and May 7, 2010.

Applicant's Address: 4400 Computer Dr., Westborough, MA 01581.

Pioneer Select Value Fund

[File No. 811–21530]

Pioneer Select Growth Fund

[File No. 811–21452]

Summary: Each applicant seeks an order declaring that it has ceased to be an investment company. On May 30, 2008 and March 23, 2009, respectively, applicants made liquidating distributions to their shareholders, based on net asset value. Expenses of $5,500 and $7,000, respectively, incurred in connection with the liquidations were paid by Pioneer Investment Management, Inc., applicants' investment adviser.

Filing Date: The applications were filed on November 12, 2009 and amended on May 21, 2010 and May 24, 2010, respectively.

Applicants' Address: 60 State St., Boston, MA 02109.

Utopia Funds

[File No. 811–21798]

Summary: Applicant seeks an order declaring that it has ceased to be an investment company. On March 31, 2009, applicant made a liquidating distribution to its shareholder, based on net asset value. Expenses of $304,485 incurred in connection with the liquidation were paid by applicant.

Filing Dates: The application was filed on June 8, 2009 and amended on March 4, 2010 and May 27, 2010.

Applicant's Address: 111 Cass St., Traverse City, MI 49684.

Morgan Stanley International SmallCap Fund

[File No. 811–7169]

Summary: Applicant seeks an order declaring that it has ceased to be an investment company. On July 30, 2008, applicant made a final liquidating distribution to its shareholders, based on net asset value. Expenses of approximately $41,106 incurred in connection with the liquidation were paid by Morgan Stanley Investment Advisors Inc., applicant's investment adviser.

Filing Date: The application was filed on April 21, 2010.

Applicant's Address: c/o Morgan Stanley Investment Advisors Inc., 522 Fifth Ave., New York, NY 10036.

SG Principal Protected Trust

[File No. 811–21194]

Summary: Applicant, a closed-end investment company, seeks an order declaring that it has ceased to be an investment company. Applicant has never made a public offering of its securities and does not propose to make a public offering or engage in business of any kind.

Filing Date: The application was filed on May 6, 2010.

Applicant's Address: 1221 Avenue of the Americas, New York, NY 10020.

S&P 500® Covered Call Fund Inc.

[File No. 811–21672]

Summary: Applicant, a closed-end investment company, seeks an order declaring that it has ceased to be an investment company. On February 2, 2010, applicant made a liquidating distribution to its shareholders, based on net asset value. Expenses of approximately $27,000 incurred in connection with the liquidation will be paid by applicant and IQ Investment Advisors LLC, applicant's investment adviser. Applicant will pay approximately $14,752 of the accrued expenses with cash that it has retained for that purpose.

Filing Date: The application was filed on April 29, 2010.

Applicant's Address: 4 World Financial Center, 6th Floor, New York, NY 10080.

Capital Growth Portfolio

[File No. 811–9835]

Summary: Applicant seeks an order declaring that it has ceased to be an investment company. On November 13, 2009, applicant made a liquidating distribution to its shareholders, based on net asset value. Applicant incurred no expenses in connection with the liquidation.

Filing Date: The application was filed on April 23, 2010.

Applicant's Address: Two International Place, Boston, MA 02110.

Adelante Funds

[File No. 811–9679]

Summary: Applicant seeks an order declaring that it has ceased to be an investment company. On March 19, 2010, applicant made a liquidating distribution to its shareholders, based on net asset value. Expenses of approximately $42,135 incurred in connection with the liquidation were paid by Adelante Capital Management LLC, applicant's investment adviser.

Filing Date: The application was filed on May 11, 2010.

Applicant's Address: 555 12th St., Suite 2100, Oakland, CA 94607.

AIM Summit Fund

[File No. 811–3443]

Summary: Applicant seeks an order declaring that it has ceased to be an investment company. On April 28, 2008, applicant transferred its assets to, and was reorganized as a series of, AIM Equity Funds, based on net asset value. Expenses of $282,300 incurred in connection with the reorganization were paid by applicant and Invesco Advisers, Inc., applicant's investment adviser.

Filing Date: The application was filed on April 23, 2010.

Applicant's Address: 11 Greenway Plaza, Suite 100, Houston, TX 77046–1173.

For the Commission, by the Division of Investment Management, pursuant to delegated authority.

Florence E. Harmon,

Deputy Secretary.

[FR Doc. 2010–13459 Filed 6–3–10; 8:45 am]

BILLING CODE 8010–01–P

SECURITIES AND EXCHANGE COMMISSION

Sunshine Act Meeting

Notice is hereby given, pursuant to the provisions of the Government in the Sunshine Act, Public Law 94–409, that the Securities and Exchange Commission will hold a Closed Meeting on Tuesday, June 8, 2010 at 2 p.m.

Commissioners, Counsel to the Commissioners, the Secretary to the Commission, and recording secretaries will attend the Closed Meeting. Certain staff members who have an interest in the matters also may be present.

The General Counsel of the Commission, or his designee, has certified that, in his opinion, one or more of the exemptions set forth in 5 U.S.C. 552b(c)(3), (5), (7), 9(B) and (10) and 17 CFR 200.402(a)(3), (5), (7), 9(ii) and (10), permit consideration of the scheduled matters at the Closed Meeting.

Commissioner Casey, as duty officer, voted to consider the items listed for the Closed Meeting in a closed session.

The subject matter of the Closed Meeting scheduled for Tuesday, June 8, 2010 will be: Institution and settlement of injunctive actions; institution and settlement of administrative proceedings; an adjudicatory matter; and other matters relating to enforcement proceedings.

At times, changes in Commission priorities require alterations in the scheduling of meeting items.

For further information and to ascertain what, if any, matters have been added, deleted or postponed, please contact:

The Office of the Secretary at (202) 551–5400.

Dated: June 1, 2010.

Elizabeth M. Murphy.

Secretary.

[FR Doc. 2010–13503 Filed 6–2–10; 11:15 am]

BILLING CODE 8010–01–P

SECURITIES AND EXCHANGE COMMISSION

[Release No. 34–62193; File No. SR–CBOE–2010–043]

Self-Regulatory Organizations; Chicago Board Options Exchange, Incorporated; Notice of Filing of Proposed Rule Change To Enable the Listing and Trading of Options on the Sprott Physical Gold Trust

May 28, 2010.

Pursuant to Section 19(b)(1) of the Securities Exchange Act of 1934 (the "Act") [1] and Rule 19b–4 thereunder,[2] notice is hereby given that on May 11, 2010, the Chicago Board Options Exchange, Incorporated ("Exchange" or "CBOE") filed with the Securities and Exchange Commission (the "Commission") the proposed rule change as described in Items I, II, and III below, which Items have been prepared by the Exchange. The Commission is publishing this notice to solicit comments on the proposed rule change from interested persons.

I. Self-Regulatory Organization's Statement of the Terms of Substance of the Proposed Rule Change

CBOE proposes to amend certain rules to enable the listing and trading on the Exchange of options on the Sprott Physical Gold Trust. The text of the rule proposal is available on the Exchange's Web site (*http://www.cboe.org/legal*), at the Exchange's Office of the Secretary and at the Commission.

II. Self-Regulatory Organization's Statement of the Purpose of, and Statutory Basis for, the Proposed Rule Change

In its filing with the Commission, the self-regulatory organization included statements concerning the purpose of, and basis for, the proposed rule change and discussed any comments it received on the proposed rule change. The text of those statements may be examined at the places specified in Item IV below. The Exchange has prepared summaries, set forth in sections A, B, and C below, of the most significant parts of such statements.

A. Self-Regulatory Organization's Statement of the Purpose of, and Statutory Basis for, the Proposed Rule Change

1. Purpose

Recently the U.S. Securities and Exchange Commission ("SEC" or "Commission") authorized CBOE to list and trade options on the SPDR Gold Trust,[3] the iShares COMEX Gold Trust, the iShares Silver Trust,[4] the ETFS Silver Trust and the ETFS Gold Trust,[5] the ETFS Palladium Trust and the ETFS Platinum Trust.[6] Now, the Exchange proposes to list and trade options on the Sprott Physical Gold Trust ("PHYS").

Under current Rule 5.3, only Units (also referred to herein as exchange traded fund ("ETFs")) representing (i) interests in registered investment companies (or series thereof) organized as open-end management investment companies, unit investment trusts or similar entities that hold portfolios of securities and/or financial instruments including, but not limited to, stock index futures contracts, options on futures, options on securities and indexes, equity caps, collars and floors, swap agreements, forward contracts, repurchase agreements and reverse purchase agreements (the "Financial Instruments"), and money market instruments, including, but not limited to, U.S. government securities and repurchase agreements (the "Money Market Instruments") comprising or otherwise based on or representing investments in indexes or portfolios of securities and/or Financial Instruments and Money Market Instruments (or that hold securities in one or more other registered investment companies that themselves hold such portfolios of securities and/or Financial Instruments and Money Market Instruments); or (ii) interests in a trust or similar entity that holds a specified non-U.S. currency deposited with the trust or similar entity when aggregated in some specified minimum number may be surrendered to the trust by the beneficial owner to receive the specified non-U.S. currency and pays the beneficial owner interest and other distributions on deposited non-U.S. currency, if any, declared and paid by the trust; or (iii) commodity pool interests principally engaged, directly or indirectly, in holding and/or managing portfolios or baskets of securities, commodity futures contracts, options on commodity futures contracts, swaps, forward contracts and/or options on physical commodities and/or non-U.S. currency ("Commodity Pool Units"); or (iv) represent interests in the streetTRACKS Gold Trust or the iShares COMEX Gold Trust or the iShares Silver Trust or the ETFS Silver Trust or the ETFS Gold Trust or the ETFS Palladium Trust or the ETFS Platinum Trust; or (v) represents an interest in a registered investment company ("Investment Company") organized as an open-end management investment company or similar entity, that invests in a portfolio of securities selected by the Investment Company's investment adviser consistent with the Investment Company's investment objectives and policies, which is issued in a specified aggregate minimum number in return for a deposit of a specified portfolio of securities and/or a cash amount with a value equal to the next determined net asset value ("NAV"), and when aggregated in the same specified minimum number, may be redeemed at a holder's request, which holder will be paid a specified portfolio of securities and/or cash with a value equal to the next determined NAV ("Managed Fund Share") are eligible as underlying securities for options traded on the Exchange.[7] This rule change proposes to expand the types of ETFs that may be approved for options trading on the Exchange to include the Sprott Physical Gold Trust.

Apart from allowing Sprott Physical Gold Trust to be an underlying for options traded on the Exchange as described above, the listing standards for ETFs will remain unchanged from those that apply under current Exchange rules. ETFs on which options may be listed and traded must still be listed and traded on a national securities exchange and must satisfy the other listing standards set forth in Interpretation and Policy .06 to Rule 5.3.

Specifically, in addition to satisfying the aforementioned listing requirements, Units must meet either (1) the criteria and guidelines under Rule 5.3 and Interpretation and Policy .01 to Rule 5.3, *Criteria for Underlying Securities*; or (2) they must be available for creation or redemption each

[1] 15 U.S.C. 78s(b)(1).

[2] 17 CFR 240.19b–4.

[3] *See* Securities Exchange Act Release No. 57897 (May 30, 2008), 73 FR 32061 (June 5, 2008) (order approving SR–CBOE–2005–11).

[4] *See* Securities Exchange Act Release No. 59055 (December 4, 2008), 73 FR 75148 (December 10, 2008) (order approving SR–CBOE–2008–72).

[5] *See* Securities Exchange Act Release No. 61483 (February 3, 2010) (order approving SR–CBOE–2010–007).

[6] *See* Securities Exchange Act Release No. 61892 (April 13, 2010), 75 FR 20649 (April 20, 2010) (order approving SR–CBOE–2010–015).

[7] *See* Interpretation and Policy .06 to Rule 5.3.

business day from or through the issuer in cash or in kind at a price related to net asset value, and the issuer must be obligated to issue Units in a specified aggregate number even if some or all of the investment assets required to be deposited have not been received by the issuer, subject to the condition that the person obligated to deposit the investments has undertaken to deliver the investment assets as soon as possible and such undertaking is secured by the delivery and maintenance of collateral consisting of cash or cash equivalents satisfactory to the issuer, as provided in the respective prospectus.

The Exchange states that the current continued listing standards for options on ETFs will apply to options on the Sprott Physical Gold Trust. Specifically, under Interpretation and Policy .08 to Rule 5.4, options on Units may be subject to the suspension of opening transactions as follows: (1) Following the initial twelve-month period beginning upon the commencement of trading of the Units, there are fewer than 50 record and/or beneficial holders of the Units for 30 or more consecutive trading days; (2) the value of the index or portfolio of securities, non-U.S. currency, or portfolio of commodities including commodity futures contracts, options on commodity futures contracts, swaps, forward contracts and/or options on physical commodities and/or Financial Instruments and Money Market Instruments on which Units are based is no longer calculated or available; or (3) such other event occurs or condition exists that in the opinion of the Exchange makes further dealing on the Exchange inadvisable.

Additionally, the Sprott Physical Gold Trust shall not be deemed to meet the requirements for continued approval, and the Exchange shall not open for trading any additional series of option contracts of the class covering the Sprott Physical Gold Trust, if the Sprott Physical Gold Trust ceases to be an "NMS stock" as provided for in paragraph (f) of Interpretation and Policy .01 of Rule 5.4 or the Sprott Physical Gold Trust is halted from trading on its primary market.

The addition of the Sprott Physical Gold Trust to Interpretation and Policy .06 to Rule 5.3 will not have any effect on the rules pertaining to position and exercise limits [8] or margin.[9]

The Exchange represents that its surveillance procedures applicable to trading in options on the Sprott Physical Gold Trust will be similar to those applicable to all other options on other Units currently traded on the Exchange. The Exchange represents that its surveillance procedures applicable to trading in options on the Sprott Physical Gold Trust will be similar to those applicable to all other options on other ETFs currently traded on the Exchange. Also, the Exchange may obtain information from the New York Mercantile Exchange, Inc. ("NYMEX") (a member of the Intermarket Surveillance Group) related to any financial instrument that is based, in whole or in part, upon an interest in or performance of gold.

2. Statutory Basis

The Exchange believes the proposed rule change is consistent with Section 6(b) [10] of the Act, in general, and furthers the objectives of Section 6(b)(5) [11] in particular in that it is designed to prevent fraudulent and manipulative acts and practices, to promote just and equitable principles of trade, to foster cooperation and coordination with persons engaged in facilitating transactions in securities, and to remove impediments to and perfect the mechanisms of a free and open market in a manner consistent with the protection of investors and the public interest. In particular, the Exchange believes that amending its rules to accommodate the listing and trading of options on the Sprott Physical Gold Trust will benefit investors by providing them with valuable risk management tools.

B. Self-Regulatory Organization's Statement on Burden on Competition

CBOE does not believe that the proposed rule change will impose any burden on competition not necessary or appropriate in furtherance of the purposes of the Act.

C. Self-Regulatory Organization's Statement on Comments on the Proposed Rule Change Received From Members, Participants or Others

The Exchange neither solicited nor received comments on the proposal.

III. Date of Effectiveness of the Proposed Rule Change and Timing for Commission Action

Within 35 days of the date of publication of this notice in the **Federal Register** or within such longer period (i) as the Commission may designate up to 90 days of such date if it finds such longer period to be appropriate and publishes its reasons for so finding or (ii) as to which the self-regulatory organization consents, the Commission will:

(A) By order approve such proposed rule change, or

(B) Institute proceedings to determine whether the proposed rule change should be disapproved.

IV. Solicitation of Comments

Interested persons are invited to submit written data, views, and arguments concerning the foregoing, including whether the proposed rule change is consistent with the Act. Comments may be submitted by any of the following methods:

Electronic Comments

- Use the Commission's Internet comment form (*http://www.sec.gov/rules/sro.shtml);* or
- Send an e-mail to *rule-comments@sec.gov.* Please include File Number SR–CBOE–2010–043 on the subject line.

Paper Comments

- Send paper comments in triplicate to Elizabeth M. Murphy, Secretary, Securities and Exchange Commission, 100 F Street, NE., Washington, DC 20549–1090.

All submissions should refer to File Number *SR–CBOE–2010–043.* This file number should be included on the subject line if e-mail is used. To help the Commission process and review your comments more efficiently, please use only one method. The Commission will post all comments on the Commission's Internet Web site (*http://www.sec.gov/rules/sro.shtml).* Copies of the submission, all subsequent amendments, all written statements with respect to the proposed rule change that are filed with the Commission, and all written communications relating to the proposed rule change between the Commission and any person, other than those that may be withheld from the public in accordance with the provisions of 5 U.S.C. 552, will be available for Web site viewing and printing in the Commission's Public Reference Room, 100 F Street, NE., Washington, DC 20549, on official business days between the hours of 10 a.m. and 3 p.m. Copies of the filing also will be available for inspection and copying at the principal office of the Exchange. All comments received will be posted without change; the Commission does not edit personal identifying information from submissions. You should submit only information that you wish to make

[8] *See* Rules 4.11, *Position Limits,* and 4.12, *Exercise Limits.*

[9] *See* Rule 12.3, *Margin Requirements.*

[10] 15 U.S.C. 78f(b).

[11] 15 U.S.C. 78f(b)(5).

available publicly. All submissions should refer to File Number SR–CBOE–2010–043 and should be submitted on or before June 25, 2010.

For the Commission, by the Division of Trading and Markets, pursuant to delegated authority.[12]

Florence E. Harmon,

Deputy Secretary.

[FR Doc. 2010–13437 Filed 6–3–10; 8:45 am]

BILLING CODE 8011–01–P

SECURITIES AND EXCHANGE COMMISSION

[Release No. 34–62199; File No. SR–FINRA–2010–026]

Self-Regulatory Organizations; Financial Industry Regulatory Authority, Inc.; Notice of Filing of Proposed Rule Change To Adopt FINRA Rule 5121 (Public Offerings of Securities With Conflicts of Interest) in the Consolidated FINRA Rulebook

June 1, 2010.

Pursuant to Section 19(b)(1) of the Securities Exchange Act of 1934 ("Act")[1] and Rule 19b–4 thereunder,[2] notice is hereby given that on May 20, 2010, Financial Industry Regulatory Authority, Inc. ("FINRA") (f/k/a National Association of Securities Dealers, Inc. ("NASD")) filed with the Securities and Exchange Commission ("SEC" or "Commission") the proposed rule change as described in Items I, II, and III below, which Items have been substantially prepared by FINRA. The Commission is publishing this notice to solicit comments on the proposed rule change from interested persons.

I. Self-Regulatory Organization's Statement of the Terms of Substance of the Proposed Rule Change

FINRA is proposing to adopt NASD Rule 2720 (Public Offerings of Securities With Conflicts of Interest) as a FINRA rule in the consolidated FINRA rulebook without material change. The proposed rule change would renumber NASD Rule 2720 as FINRA Rule 5121 in the consolidated FINRA rulebook.

The text of the proposed rule change is available on FINRA's Web site at *http://www.finra.org,* at the principal office of FINRA and at the Commission's Public Reference Room.

[12] 17 CFR 200.30–3(a)(12).

[1] 15 U.S.C. 78s(b)(1).

[2] 17 CFR 240.19b–4.

II. Self-Regulatory Organization's Statement of the Purpose of, and Statutory Basis for, the Proposed Rule Change

In its filing with the Commission, FINRA included statements concerning the purpose of and basis for the proposed rule change and discussed any comments it received on the proposed rule change. The text of these statements may be examined at the places specified in Item IV below. FINRA has prepared summaries, set forth in sections A, B, and C below, of the most significant aspects of such statements.

A. Self-Regulatory Organization's Statement of the Purpose of, and Statutory Basis for, the Proposed Rule Change

1. Purpose

As part of the process of developing a new consolidated rulebook ("Consolidated FINRA Rulebook"),[3] FINRA is proposing to adopt NASD Rule 2720 (Public Offerings of Securities With Conflicts of Interest) without material change as FINRA Rule 5121 in the Consolidated FINRA Rulebook.

NASD Rule 2720 governs public offerings of securities in which a member with a conflict of interest participates. The rule generally prohibits a member with a "conflict of interest," as defined in the rule,[4] from participating in a public offering, unless certain other requirements are met.[5] There is no comparable Incorporated NYSE Rule.

On June 15, 2009, the SEC approved a proposed rule change to modernize NASD Rule 2720 (the "2009 Rule Change").[6] The 2009 Rule Change became effective on September 14, 2009.[7]

The proposed rule change would adopt NASD Rule 2720 without material change as FINRA Rule 5121 in the Consolidated FINRA Rulebook. The rule would make minor changes to reflect the new terminology conventions of the Consolidated FINRA Rulebook.

FINRA will announce the implementation date of the proposed rule change in a *Regulatory Notice* to be published no later than 90 days following Commission approval. The implementation date will be no later than 180 days from Commission approval.

2. Statutory Basis

FINRA believes that the proposed rule change is consistent with the provisions of Section 15A(b)(6) of the Act,[8] which requires, among other things, that FINRA rules must be designed to prevent fraudulent and manipulative acts and practices, to promote just and equitable principles of trade, and, in general, to protect investors and the public interest. FINRA believes that the proposed rule change will continue to serve to protect investors in offerings where the member has a conflict of interest.

B. Self-Regulatory Organization's Statement on Burden on Competition

FINRA does not believe that the proposed rule change will result in any burden on competition that is not necessary or appropriate in furtherance of the purposes of the Act.

C. Self-Regulatory Organization's Statement on Comments on the Proposed Rule Change Received From Members, Participants, or Others

Written comments were neither solicited nor received.

[3] The current FINRA rulebook consists of (1) FINRA Rules; (2) NASD Rules; and (3) rules incorporated from NYSE ("Incorporated NYSE Rules") (together, the NASD Rules and Incorporated NYSE Rules are referred to as the "Transitional Rulebook"). While the NASD Rules generally apply to all FINRA members, the Incorporated NYSE Rules apply only to those members of FINRA that are also members of the NYSE ("Dual Members"). The FINRA Rules apply to all FINRA members, unless such rules have a more limited application by their terms. For more information about the rulebook consolidation process, *see Information Notice,* March 12, 2008 (Rulebook Consolidation Process).

[4] As defined in NASD Rule 2720(f)(5), a conflict of interest exists, if at the time of a member's participation in an entity's public offering, any of the following four conditions applies: (1) The securities are to be issued by the member; (2) the issuer controls, is controlled by or is under common control with the member or the member's associated persons; (3) at least five percent of the net offering proceeds, not including underwriting compensation, are intended to be (i) used to reduce or retire the balance of a loan or credit facility extended by the member, its affiliates and its associated persons, in the aggregate; or (ii) otherwise directed to the member, its affiliates and associated persons, in the aggregate; or (4) if, as a result of the public offering and any transactions contemplated at the time of the public offering (i) the member will be an affiliate of the issuer; (ii) the member will become publicly owned; or (iii) the issuer will become a member or form a broker-dealer subsidiary. NASD Rule 2720 defines several terms for purposes of the rule, including "entity," "control," and "common control."

[5] The rule requires prominent disclosure of the nature of the conflict, and in certain circumstances, the participation of a qualified independent underwriter. Members also must comply with certain net capital, discretionary accounts and filing requirements, as applicable.

[6] *See* Securities Exchange Act Release No. 60113 (June 15, 2009), 74 FR 29255 (June 19, 2009) (Order Approving Proposed Rule Change; File No. SR–FINRA–2007–009).

[7] *See Regulatory Notice* 09–49 (SEC Approves Amendments to Modernize and Simplify NASD Rule 2720 Relating to Public Offerings in Which a Member Firm With a Conflict of Interest Participates) (August 2009).

[8] 15 U.S.C. 78*o*–3(b)(6).

III. Date of Effectiveness of the Proposed Rule Change and Timing for Commission Action

Within 35 days of the date of publication of this notice in the **Federal Register** or within such longer period (i) as the Commission may designate up to 90 days of such date if it finds such longer period to be appropriate and publishes its reasons for so finding or (ii) as to which the self-regulatory organization consents, the Commission will:

(A) By order approve such proposed rule change, or

(B) Institute proceedings to determine whether the proposed rule change should be disapproved.

IV. Solicitation of Comments

Interested persons are invited to submit written data, views, and arguments concerning the foregoing, including whether the proposed rule change is consistent with the Act. Comments may be submitted by any of the following methods:

Electronic Comments

- Use the Commission's Internet comment form (*http://www.sec.gov/rules/sro.shtml*); or
- Send an e-mail to *rule-comments@sec.gov*. Please include File Number SR–FINRA–2010–026 on the subject line.

Paper Comments

- Send paper comments in triplicate to Elizabeth M. Murphy, Secretary, Securities and Exchange Commission, 100 F Street, NE., Washington, DC 20549–1090.

All submissions should refer to File Number SR–FINRA–2010–026. This file number should be included on the subject line if e-mail is used. To help the Commission process and review your comments more efficiently, please use only one method. The Commission will post all comments on the Commission's Internet Web site (*http://www.sec.gov/rules/sro.shtml*). Copies of the submission, all subsequent amendments, all written statements with respect to the proposed rule change that are filed with the Commission, and all written communications relating to the proposed rule change between the Commission and any person, other than those that may be withheld from the public in accordance with the provisions of 5 U.S.C. 552, will be available for Web site viewing and printing in the Commission's Public Reference Room, 100 F Street, NE., Washington, DC 20549, on official business days between the hours of 10 a.m. and 3 p.m. Copies of such filing also will be available for inspection and copying at the principal office of FINRA. All comments received will be posted without change; the Commission does not edit personal identifying information from submissions. You should submit only information that you wish to make available publicly. All submissions should refer to File Number SR–FINRA–2010–026 and should be submitted on or before June 25, 2010.

For the Commission, by the Division of Trading and Markets, pursuant to delegated authority.[9]

Florence E. Harmon,

Deputy Secretary.

[FR Doc. 2010–13460 Filed 6–3–10; 8:45 am]

BILLING CODE 8010–01–P

[9] 17 CFR 200.30–3(a)(12).

SECURITIES AND EXCHANGE COMMISSION

[Release No. 34–62190; File No. SR–CBOE–2010–021]

Self-Regulatory Organizations; Chicago Board Options Exchange, Incorporated; Order Approving Proposed Rule Change as Modified by Amendment No. 1 Thereto Relating to Correlated Instrument Delta Hedge Exemption

May 27, 2010.

On March 19, 2010, the Chicago Board Options Exchange, Incorporated ("Exchange" or "CBOE") filed with the Securities and Exchange Commission ("Commission"), pursuant to Section 19(b)(1) of the Securities Exchange Act of 1934 ("Act") [1] and Rule 19b–4 thereunder,[2] a proposed rule change to (i) expand the delta hedging exemption available for equity options position limits; (ii) amend the reporting requirements applicable to members relying on the delta hedging exemption; and (iii) adopt a delta hedging exemption from certain index options position limits. The proposed rule change was published for comment in the **Federal Register** on April 2, 2010.[3] On May 19, 2010, CBOE filed Amendment No. 1 to the proposal.[4] The Commission received no comment letters on the proposal. This order approves the proposed rule change, as modified by Amendment No. 1.

In December 2007, the Commission approved a CBOE proposal to create an exemption from position and exercise limits applicable to equity options (stock options and options on exchange-traded funds) for positions held by CBOE members and certain non-member affiliates that are delta neutral [5] under a "permitted pricing model" [6] ("Equity Exemption").[7] When a position is not delta neutral, only the option contract equivalent of the net delta [8] of the position remains subject to the position limits in Rule 4.11. Currently, the Equity Exemption is available only for securities that directly underlie the applicable option position. For example, with respect to options on exchange-traded funds ("ETF options"), index options overlying the same index on which the ETF is based currently cannot be combined with the ETF options to calculate a net delta for purposes of the Equity Exemption.

The proposed rule change would expand the Equity Exemption by permitting equity option positions for which the underlying security is an ETF that is based on the same index as an index option to be combined with any position in the underlying ETF as well as any position in an index option and/or a correlated instrument for calculation of the Equity Exemption.[9] The term "correlated instrument" would

[1] 15 U.S.C. 78s(b)(1).

[2] 17 CFR 240.19b–4.

[3] *See* Securities Exchange Act Release No. 61785 (March 25, 2010), 75 FR 16888.

[4] Amendment No. 1 deleted the word "or" from the rule text of the proposal and deleted a footnote from the purpose section and Exhibit 1 of the proposal. Because the amendment does not affect the substance of the rule filing, the amendment does not require notice and comment.

[5] "Delta neutral" is defined as a precise term for purposes of the Equity Exemption in Rule 4.11.04(c)(A).

[6] Under Rule 4.11.04(c)(C), "permitted pricing model" for purposes of the Equity Exemption is a pricing model: (1) Maintained and operated by the Options Clearing Corporation ("OCC Model"); (2) maintained and used by a member or its non-member affiliate subject to consolidated supervision by the Commission pursuant to Appendix E of Rule 15c3–1, 17 CFR 240.15c3–1, under the Act; (3) maintained and used by a financial holding company ("FHC") or a company treated as an FHC under the Bank Holding Company Act of 1956, or its affiliate subject to consolidated holding company group supervision; (4) maintained and used by a Commission-registered OTC derivatives dealer; or (5) used by a national bank under the National Bank Act.

[7] *See* Securities Exchange Act Release No. 56970 (December 14, 2007), 72 FR 72428 (December 20, 2007) (SR–CBOE–2007–99) ("Exemption Approval Order"). In August 2009, the Commission approved a CBOE proposal to extend the Equity Exemption to customers. *See* Securities Exchange Act Release No. 60555 (August 21, 2009), 74 FR 43741 (August 27, 2009) (SR–CBOE–2009–39). The Commission notes that the Equity Exemption is not currently available to customers. *See* Securities Exchange Act Release No. 61857 (April 7, 2010), 75 FR 18931 (April 13, 2010) (SR–CBOE–2010–30).

[8] "Net delta" is defined as a precise term for the purposes of the Equity Exemption in Rule 4.11.04(c)(B).

[9] However, this would not include baskets of securities for purposes of the delta hedging exemptions.

be defined to mean securities and/or other instruments that track the performance of or are based on the same underlying index as the index underlying the option position. Thus, the proposed rule change would allow financial products such as securities index options, index futures, and options on index futures to be included along with the ETF in an equity option's net delta calculation.[10]

To accommodate the use of index options and correlated instruments in the calculation of the Equity Exemption, the Exchange proposes to amend the definition of "net delta" in Rule 4.11.04(c)(B) to mean, at any time, the number of shares and/or other units of trade (either long or short) required to offset the risk that the value of an equity option position will change with incremental changes in the price of the security underlying the option position, as determined in accordance with a permitted pricing model. The Exchange also proposes to amend the definition of the "option contract equivalent of the net delta" to mean the net delta divided by the number of shares that equate to one option contract on a delta basis. Index options and equity options (*i.e.,* ETF options) that are eligible to be combined for computing a delta-based hedge exemption, along with all securities and/or other instruments that are based on or track the performance of the same underlying security or index, will be grouped and the net delta and options contract equivalent of the net delta will be calculated for each respective option class based on offsets realized from the grouping as a whole.

In another aspect of the proposal, CBOE proposes to relieve Exchange Market-Makers and Designated Primary Market-Makers ("DPMs") using the OCC Model from the reporting requirements of the Equity Exemption because, as explained by CBOE, Market-Maker and DPM position and delta information can be accessed through the Exchange's market surveillance systems. The Exchange noted that this proposal is consistent with similar exemptions from the reporting requirements under Rule 4.13 and those applicable to broad-based index options and FLEX options.

Finally, CBOE proposes to adopt an exemption from position and exercise limits[11] for positions in index options[12] held by CBOE members, certain of their affiliates, and customers that are delta neutral[13] under a permitted pricing model ("Index Exemption").[14] The options contract equivalent of the net delta[15] of such position would be subject to the appropriate position limit (subject to the availability of any other position limit exemptions).[16]

A member that intends to employ, or whose non-member affiliate or customer intends to employ, the Index Exemption would be required to provide a written certification to CBOE stating that the member, its affiliate, and/or its customer will use a permitted pricing model.[17] In addition, members that carry an account that includes an index option position for a non-member affiliate would be required to obtain and provide to the Exchange a written statement from the non-member affiliate confirming that the affiliate: (1) Is relying on this exemption; (2) will use only a permitted pricing model for purposes of calculating the net delta of its option positions for purposes of this exemption; (3) will promptly notify the member if it ceases to rely on this exemption; (4) authorizes the member, upon request, to provide to the Exchange or the Options Clearing Corporation such information regarding positions of the non-member affiliate as part of the Exchange's confirmation or verification of the accuracy of the net delta calculation under this exemption; and (5) if the non-member affiliate is using the OCC Model, has duly executed and delivered to the member such documents as the Exchange may require as a condition to reliance on this exemption.[18] Members that carry an account that includes an index option position for a customer would be required to obtain and provide to the Exchange a written statement from the customer confirming that the customer: (1) Is relying on this exemption; (2) will use only the OCC Model for purposes of calculating the net delta of the customer's options positions for purposes of this exemption; (3) will promptly notify the member if the customer ceases to rely on this exemption; and (4) in connection with using the OCC Model, has duly executed and delivered to the member such documents as the Exchange may require as a condition to reliance on this exemption.[19]

Furthermore, any member would be required to report, in accordance with Rule 4.13, all index options positions (including those that are delta neutral) that are reportable under that rule, and also would be required to report on its own behalf or on behalf of a designated aggregation unit[20] the net delta and

[10] For example, the proposed rule would allow options on Standard & Poor's Depositary Receipts ("SPY"), which tracks the performance of the S&P 500 index, to be hedged not only with SPY shares, but with S&P 500 options, S&P 500 futures, options on S&P 500 futures or any other instrument that tracks the performance of or is based on the S&P 500 index.

[11] Exchange Rule 24.5 establishes exercise limits for an index option at the same level as the index option's position limit under index options position limit rules, therefore no changes are proposed to Rule 24.5.

[12] The Index Exemption would apply to broad-based index options as well as industry index options. *See* proposed Rules 24.4.05 and Rule 24.4A.03.

[13] The term "delta neutral" would be defined as referring to an index option position that is hedged, in accordance with a permitted pricing model, by a position in one or more correlated instruments for the purpose of offsetting the risk that the value of the option position will change with incremental changes in the value of the underlying index. The term "correlated instruments" would be defined to mean securities and/or other instruments that track the performance of or are based on the same underlying index as the index underlying the option position. *See* proposed Rules 24.4.05(A). These definitions would allow financial products such as ETF options, index futures, options on index futures and ETFs that track the performance of or are based on the same underlying index to be included in an index option's net delta calculation.

[14] The terms "delta neutral," "permitted pricing model," and "options contract equivalent of the net delta" would be defined for the Index Exemption similar to the way these terms are defined for the Equity Exemption; with appropriate adjustments. *See id.* and *infra* note 15.

[15] For purposes of the Index Exemption, the term "options contract equivalent of the net delta" would be defined as the net delta divided by "units of trade that equate to one option contract on a delta basis," and the term "net delta" would be defined as, at any time, the number of shares "and/or other units of trade (either long or short)" required to offset the risk that the value of an index option position will change with incremental changes in the value of the underlying index, as determined in accordance with a permitted pricing model.

[16] *See* proposed Rule 24.4.05(B). The Commission notes that Rule 24.4 provides for multiple, independent hedge exemptions. Of course, to the extent that a position is used to hedge for the purpose of one exemption from position limit requirements, such as the Index Exemption, such position cannot be used to take advantage of another exemption from position limit requirements.

[17] *See* proposed Rule 24.4.05(E)(1)(i), (3)(i), and (4)(i). The Commission notes that customers relying on the Index Exemption would be permitted to hedge their positions only in accordance with the OCC Model. *See* proposed Rule 24.4.05(A). In addition, the Commission notes that, consistent with the Equity Exemption, the Exchange will not make the Index Exemption available to customers until the Exchange provides a representation to the Commission's Office of Compliance Inspections and Examinations that it can adequately surveil for such a customer exemption. Telephone conversation between Andrew Spiwak, Director Legal Division and Chief Enforcement Attorney, CBOE, and Theodore S. Venuti, Special Counsel, Division of Trading and Markets, Commission, on May 27, 2010. *See also supra* note 7.

[18] *See* proposed Rule 24.4.05(E)(3)(ii).

[19] *See* proposed Rule 24.4.05(E)(4)(ii).

[20] *See* proposed Rule 24.4.05(D), which provides, under certain conditions, that the net delta of an options position held by an entity entitled to rely on the exemption could be calculated without regard to positions in correlated instruments held by an affiliated entity or another trading unit within the same entity, provided that, among other things, no control relationship exists between such

Continued

options contract equivalent of the net delta of such positions for a each account that holds an index option position subject to the delta hedging exemption in excess of the levels specified in 24.4 (and Rule 24.4A, in the case of industry index options).[21] Each member relying on the exemption would be required to retain, and undertake reasonable efforts to ensure that its non-member affiliates or customers relying on the exemption retain, a list of the options, securities, and other instruments underlying each option position net delta calculation reported to the Exchange; and to produce such information to the Exchange upon request.[22] In addition, the options positions of a non-member relying on the exemption would be required to be carried by a member with which it is affiliated.[23]

The Exchange will announce the operative date of the proposed rule change in a regulatory circular to be published no later than 60 days after Commission approval. The operative date shall be no later than 30 days after publication of the regulatory circular.

The Commission finds that the proposed rule change is consistent with the requirements of the Act and the rules and regulations thereunder that are applicable to a national securities exchange.[24] In particular, the Commission believes that the proposed rule change is consistent with Section 6(b)(5) of the Act,[25] which requires, among other things, that CBOE rules be designed to prevent fraudulent and manipulative acts and practices, to promote just and equitable principles of trade, to remove impediments to and perfect the mechanism of a free and open market and a national market system, and, in general, to protect investors and the public interest.

In approving the Equity Exemption, the Commission noted its previous statement in support of recognizing options positions hedged on a delta neutral basis as properly exempted from position limits.[26] The Commission believes that it is appropriate and consistent with the Act to expand the Equity Exemption to allow the use of correlated instruments in determining whether an ETF options position is delta neutral. The Commission further believes that it is appropriate and consistent with the Act to establish a delta based index options hedge exemption from position limits. Finally, the Commission believes that it is reasonable for CBOE to exempt Exchange Market-Makers and DPMs using the OCC Model from the reporting requirements of the Equity Exemption, and not to include them as subject to the reporting requirements of the Index Exemption, because the Exchange can access the information through the Exchange's market surveillance systems.

It is therefore ordered, pursuant to Section 19(b)(2) of the Act,[27] that the proposed rule change (SR–CBOE–2010–021), as modified by Amendment No. 1, be, and it hereby is, approved.

For the Commission, by the Division of Trading and Markets, pursuant to delegated authority.[28]

Florence E. Harmon,

Deputy Secretary.

[FR Doc. 2010–13439 Filed 6–3–10; 8:45 am]

BILLING CODE 8010–01–P

affiliates or trading units and the entity has designated in writing in advance the affiliates or trading units that are to be considered separate and distinct from each other.

[21] *See* proposed Rule 24.4.05(F). *See also supra* note 12.

[22] *See* proposed Rule 24.4.05(G).

[23] *See* proposed Rule 24.4.05(E)(2).

[24] In approving this rule, the Commission notes that it has considered the proposed rule's impact on efficiency, competition, and capital formation. *See* 15 U.S.C. 78c(f).

[25] 15 U.S.C. 78f(b)(5).

[26] *See* Securities Exchange Act Release No. 40594 (October 23, 1998), 63 FR 59362, 59380 (November 3, 1998) (File No. S7–30–97) (adopting rules relating to OTC derivatives dealers), cited in Exemption Approval Order, *supra* note 7.

[27] 15 U.S.C. 78s(b)(2).

[28] 17 CFR 200.30–3(a)(12).

SECURITIES AND EXCHANGE COMMISSION

[Release No. 34–62192; File No. SR–CBOE–2010–052]

Self-Regulatory Organizations; Chicago Board Options Exchange, Incorporated; Notice of Filing and Immediate Effectiveness of Proposed Rule Change Related to Trades for Less Than $1

May 28, 2010.

Pursuant to Section 19(b)(1) of the Securities Exchange Act of 1934 (the "Act"),[1] and Rule 19b–4 thereunder,[2] notice is hereby given that on May 27, 2010, the Chicago Board Options Exchange, Incorporated ("Exchange" or "CBOE") filed with the Securities and Exchange Commission (the "Commission") the proposed rule change as described in Items I and II below, which Items have been prepared by the Exchange. The Exchange filed the proposal as a "non-controversial" proposed rule change pursuant to Section 19(b)(3)(A)(iii) of the Act[3] and Rule 19b–4(f)(6) thereunder.[4] The Commission is publishing this notice to solicit comments on the proposed rule change from interested persons.

I. Self-Regulatory Organization's Statement of the Terms of Substance of the Proposed Rule Change

The Exchange is proposing to extend its program that allows transactions to take place at a price that is below $1 per option contract until June 1, 2011. The text of the proposed rule change is available on the Exchange's Web site (*http://www.cboe.org/Legal*), at the Exchange's Office of the Secretary, on the Commission's Web site at *http://www.sec.gov,* and at the Commission's Public Reference Room.

II. Self-Regulatory Organization's Statement of the Purpose of, and Statutory Basis for, the Proposed Rule Change

In its filing with the Commission, the self-regulatory organization included statements concerning the purpose of and basis for the proposed rule change and discussed any comments it received on the proposed rule change. The text of those statements may be examined at the places specified in Item IV below. The Exchange has prepared summaries, set forth in sections A, B, and C below, of the most significant parts of such statements.

A. Self-Regulatory Organization's Statement of the Purpose of, and Statutory Basis for, the Proposed Rule Change

1. Purpose

An "accommodation" or "cabinet" trade refers to trades in listed options on the Exchange that are worthless or not actively traded. Cabinet trading is generally conducted in accordance with the Exchange Rules, except as provided in Exchange Rule 6.54, *Accommodation Liquidations (Cabinet Trades),* which sets forth specific procedures for engaging in cabinet trades. Rule 6.54 currently provides for cabinet transactions to occur via open outcry at a cabinet price of $1 per option contract in any options series open for trading in the Exchange, except that the Rule is not applicable to trading in option classes participating in the Penny Pilot Program. Under the procedures, bids and offers (whether opening or closing a position) at a price of $1 per option contract may be represented in the trading crowd by a Floor Broker or by a Market-Maker or provided in response to a request by a PAR Official/OBO, a Floor Broker or a Market-Maker, but

[1] 15 U.S.C. 78s(b)(1).

[2] 17 CFR 240.19b–4.

[3] 15 U.S.C. 78s(b)(3)(A)(iii).

[4] 17 CFR 240.19b–4(f)(6).

must yield priority to all resting orders in the PAR Official/OBO cabinet book (which resting cabinet book orders may be closing only). So long as both the buyer and the seller yield to orders resting in the cabinet book, opening cabinet bids can trade with opening cabinet offers at $1 per option contract.

The Exchange has temporarily amended the procedures through June 1, 2010 to allow transactions to take place in open outcry at a price of at least $0 but less than $1 per option contract.[5] These lower priced transactions are traded pursuant to the same procedures applicable to $1 cabinet trades, except that (i) bids and offers for opening transactions are only permitted to accommodate closing transactions in order to limit use of the procedure to liquidations of existing positions, and (ii) the procedures are also available for trading in option classes participating in the Penny Pilot Program.[6] The Exchange believes that allowing a price of at least $0 but less than $1 better accommodates the closing of options positions in series that are worthless or not actively traded, particularly due to recent market conditions which have resulted in a significant number of series being out-of-the-money. For example, a market participant might have a long position in a call series with a strike price of $100 and the underlying stock might now be trading at $30. In such an instance, there might not otherwise be a market for that person to close-out the position even at the $1 cabinet price (*e.g.,* the series might be quoted no bid).[7]

The purpose of the instant rule change is to extend the operation of these temporary procedures through June 1, 2011, so that the procedures can continue without interruption while CBOE considers whether to seek permanent approval of the temporary procedures.

2. Statutory Basis

The Exchange believes the proposed rule change is consistent with the Act[8] and the rules and regulations thereunder and, in particular, the requirements of Section 6(b) of the Act.[9] Specifically, the Exchange believes the proposed rule change is consistent with the Section 6(b)(5)[10] requirements that the rules of an exchange be designed to promote just and equitable principles of trade, to prevent fraudulent and manipulative acts, to remove impediments to and to perfect the mechanism for a free and open market and a national market system, and, in general, to protect investors and the public interest. The Exchange believes that allowing for liquidations at a price less than $1 per option contract better facilitates the closing of options positions that are worthless or not actively trading.

B. Self-Regulatory Organization's Statement on Burden on Competition

CBOE does not believe that the proposed rule change will impose any burden on competition not necessary or appropriate in furtherance of the purposes of the Act.

C. Self-Regulatory Organization's Statement on Comments on the Proposed Rule Change Received From Members, Participants, or Others

The Exchange neither solicited nor received comments on the proposal.

III. Date of Effectiveness of the Proposed Rule Change and Timing for Commission Action

Because the foregoing proposed rule does not (i) significantly affect the protection of investors or the public interest; (ii) impose any significant burden on competition; and (iii) become operative for 30 days from the date on which it was filed, or such shorter time as the Commission may designate if consistent with the protection of investors and the public interest, provided that the self-regulatory organization has given the Commission written notice of its intent to file the proposed rule change at least five business days prior to the date of filing of the proposed rule change or such shorter time as designated by the Commission, the proposed rule change has become effective pursuant to Section 19(b)(3)(A) of the Act[11] and Rule 19b–4(f)(6) thereunder.[12]

Under Rule 19b–4(f)(6) of the Act,[13] a proposal does not become operative for 30 days after the date of its filing, or such shorter time as the Commission may designate if consistent with the protection of investors and the public interest. The Exchange has requested that the Commission waive the 30-day operative date so that the pilot may continue without interruption while the Exchange considers whether to seek permanent approval of the temporary procedures. The Exchange believes that waiver of the operative delay will continue to allow for the orderly closing of option positions that are worthless or not actively traded. The Commission believes that waiving the 30-day operative delay is consistent with the protection of investors and the public interest, and thus designates the proposal as operative upon filing.[14]

At any time within 60 days of the filing of such proposed rule change, the Commission may summarily abrogate such rule change if it appears to the Commission that such action is necessary or appropriate in the public interest, for the protection of investors,

[5] *See* Securities Exchange Act Release Nos. 59188 (December 30, 2008), 74 FR 480 (January 6, 2009) (SR–CBOE–2008–133) (adopting the amended procedures on a temporary basis through January 30, 2009), 59331 (January 30, 2009), 74 FR 6333 (February 6, 2009) (extending the amended procedures on a temporary basis through May 29, 2009), and 60020 (June 1, 2009), 74 FR 27220 (June 8, 2009) (SR–CBOE–2009–034) (extending the amended procedures on a temporary basis through June 1, 2010).

[6] Currently the $1 cabinet trading procedures are limited to options classes traded in $0.05 or $0.10 standard increment. The $1 cabinet trading procedures are not available in Penny Pilot Program classes because in those classes an option series can trade in a standard increment as low as $0.01 per share (or $1.00 per option contract with a 100 share multiplier). Because the temporary procedures allow trading below $0.01 per share (or $1.00 per option contract with a 100 share multiplier), the procedures are available for all classes, including those classes participating in the Penny Pilot Program.

[7] As with other accommodation liquidations under Rule 6.54, transactions that occur for less than $1 are not be disseminated to the public on the consolidated tape. In addition, as with other accommodation liquidations under Rule 6.54, the transactions are exempt from the Consolidated Options Audit Trail ("COATS") requirements of Exchange Rule 6.24, *Required Order Information.* However, the Exchange maintains quotation, order and transaction information for the transactions in the same format as the COATS data is maintained. In this regard, all transactions for less than $1 must be reported to the Exchange following the close of each business day. The rule also provides that transactions for less than $1 will be reported for clearing utilizing forms, formats and procedures established by the Exchange from time to time. In this regard, the Exchange initially intends to have clearing firms directly report the transactions to The Options Clearing Corporation ("OCC") using OCC's position adjustment/transfer procedures. This manner of reporting transactions for clearing is similar to the procedure that CBOE currently employees for on-floor position transfer packages executed pursuant to Exchange Rule 6.49A, *Transfer of Positions.*

[8] 15 U.S.C. 78s(b)(1).

[9] 15 U.S.C. 78f(b).

[10] 15 U.S.C. 78f(b)(5).

[11] 15 U.S.C. 78s(b)(3)(A).

[12] 17 CFR 240.19b–4(f)(6). Rule 19b–4(f)(6)(iii) requires the self-regulatory organization to submit to the Commission written notice of its intent to file the proposed rule change, along with a brief description and text of the proposed rule change, at least five business days prior to the date of filing of the proposed rule change, or such shorter time as designated by the Commission. The Exchange has satisfied this requirement.

[13] *Id.*

[14] For purposes only of waiving the operative date of this proposal, the Commission has considered the proposed rule's impact on efficiency, competition, and capital formation. *See* 15 U.S.C. 78c(f). *See also* 17 CFR 200.30–3(a)(59).

or otherwise in furtherance of the purposes of the Act.

IV. Solicitation of Comments

Interested persons are invited to submit written data, views, and arguments concerning the foregoing, including whether the proposed rule change is consistent with the Act. Comments may be submitted by any of the following methods:

Electronic Comments

- Use the Commission's Internet comment form (*http://www.sec.gov/rules/sro.shtml);* or
- Send an e-mail to *rule-comments@sec.gov*. Please include File Number SR–CBOE–2010–052 on the subject line.

Paper Comments

- Send paper comments in triplicate to Elizabeth M. Murphy, Secretary, Securities and Exchange Commission, 100 F Street, NE., Washington, DC 20549–1090.

All submissions should refer to File Number SR–CBOE–2010–052. This file number should be included on the subject line if e-mail is used. To help the Commission process and review your comments more efficiently, please use only one method. The Commission will post all comments on the Commission's Internet Web site (*http://www.sec.gov/rules/sro.shtml*). Copies of the submission, all subsequent amendments, all written statements with respect to the proposed rule change that are filed with the Commission, and all written communications relating to the proposed rule change between the Commission and any person, other than those that may be withheld from the public in accordance with the provisions of 5 U.S.C. 552, will be available for Web site viewing and printing in the Commission's Public Reference Room, 100 F Street, NE., Washington, DC 20549, on official business days between the hours of 10 a.m. and 3 p.m. Copies of the filing also will be available for inspection and copying at the principal office of the Exchange. All comments received will be posted without change; the Commission does not edit personal identifying information from submissions. You should submit only information that you wish to make available publicly. All submissions should refer to File Number SR–CBOE–2010–052 and should be submitted on or before June 25, 2010.

For the Commission, by the Division of Trading and Markets, pursuant to delegated authority.[15]

Florence E. Harmon,

Deputy Secretary.

[FR Doc. 2010–13438 Filed 6–3–10; 8:45 am]

BILLING CODE 8010–01–P

SECURITIES AND EXCHANGE COMMISSION

[Release No. 34–62194; File No. SR–Phlx–2010–48]

Self-Regulatory Organizations; Order Approving Proposed Rule Change by NASDAQ OMX PHLX, Inc. Relating to Market Data Fees

May 28, 2010.

I. Introduction

On April 6, 2010, NASDAQ OMX PHLX, Inc. ("Phlx" or "Exchange") filed with the Securities and Exchange Commission ("Commission"), pursuant to Section 19(b)(1) of the Securities Exchange Act of 1934 ("Act") [1] and Rule 19b–4 thereunder,[2] a proposed rule change to establish fees for a data product, Top of Phlx Options Plus Orders ("TOPO Plus Orders" or "TOPO Plus"), which currently provides disseminated Exchange top-of-market data (including orders, quotes and trades), together with all information that is included in the Exchange's Specialized Order Feed ("SOF"). The proposed rule change was published for comment in the **Federal Register** on April 16, 2010.[3] The Commission received three comment letters on the proposed rule change.[4] The Exchange submitted one letter in response to these comment letters.[5]

This order approves the proposed rule change.

II. Description of the Proposed Rule Change

In June 2009, the Exchange launched Phlx XL II, an electronic trading platform on which all options on the Exchange are currently traded.[6] In conjunction with the launch and rollout of the Phlx XL II system, the Exchange developed the Top of Phlx Options direct data feed ("TOPO"),[7] which provides to subscribers the Exchange's best bid and offer position, with aggregate size, based on displayable order and quoting interest on the Phlx XL II system.

In October 2009, the Exchange made the TOPO Plus Orders data feed available to all market participants for free.[8] According to the Exchange, TOPO Plus Orders provides disseminated Exchange top-of-market data (including orders, quotes and trades) together with all information that is included in SOF, the Exchange's real-time full limit order book data feed. When it established TOPO Plus Orders, the Exchange stated that it planned to submit a proposed rule change to the Commission in order to implement fees for the use of TOPO Plus Orders.

SOF is currently available to any Exchange quoting participant (*i.e.,* specialists, Streaming Quote Traders, and Remote Streaming Quote Traders (collectively, "users")) and is available to users on an issue-by-issue basis at the user's request. A user does not have to be assigned in an issue for the Exchange to provide SOF to such user in that issue. The SOF provides real-time information to keep track of the single order book(s), single and complex orders, complex strategy and Live Auction for all symbols for which the user is configured. Users may be configured for one or more symbols. SOF provides real-time data for the entire book to its users. It is a compilation of limit order data resident in the Exchange's limit order book for options traded on the Exchange that the Exchange provides through a real-time data feed. The Exchange updates SOF information upon receipt of each displayed limit order. For every limit

---

[15] 17 CFR 200.30–3(a)(12).

[1] 15 U.S.C. 78s(b)(1).

[2] 17 CFR 240.19b–4.

[3] *See* Securities Exchange Act Release No. 61878 (April 8, 2010), 75 FR 20023 (April 16, 2010) ("Notice").

[4] *See* Letter from Lawrence Lempert, Bullock Trading, LP, Michael Waber, Fairview Trading Corp., Andy Yang, Cutler Group, LP, Theodore Raven, TSR Associates, LLC, and Tim Lobach, Keystone Trading Partners to Mary Schapiro, Chairman, Commission, dated May 3, 2010 ("Lempert Letter") and Letter from Robert Sullivan, Empire Options Corporation to Mary Schapiro, Chairman, Commission, received May 3, 2010 ("Sullivan Letter"). *See also* Letter from Michael Waber, Fairview Trading, Inc., to Elizabeth M. Murphy, Secretary, Commission, dated May 23, 2010 ("Waber Letter") (responding to the Phlx Letter, *infra* note 5).

[5] *See* Letter from Richard S. Rudolph, Assistant General Counsel, NASDAQ OMX PHLX, Inc. to Elizabeth M. Murphy, Secretary, Commission, dated May 13, 2010 ("Phlx Letter").

[6] *See* Securities Exchange Act Release No. 59995 (May 28, 2009), 74 FR 26750 (June 3, 2009) (SR–Phlx–2009–32).

[7] *See* Securities Exchange Act Release No. 60459 (August 7, 2009), 74 FR 41466 (August 17, 2009) (SR–Phlx–2009–54). The Exchange represents that the data contained in the TOPO data feed is identical to the data sent to the processor for the Options Price Regulatory Authority ("OPRA"), and the TOPO and OPRA data leave the Phlx XL II system at the same time.

[8] *See* Securities Exchange Act Release No. 60877 (October 26, 2009), 74 FR 56255 (October 30, 2009) (SR–Phlx–2009–92).

price, the SOF includes the aggregate order volume.

The Exchange anticipates that it will generally phase out SOF as of June 1, 2010, and instead offer only TOPO Plus Orders to participants that wish to continue to receive the data currently included in SOF. Thus, current SOF users must migrate to TOPO Plus Orders by June 1, 2010. The Exchange recognizes, however, that some SOF users may encounter issues beyond their control that render them unable to migrate from SOF to the TOPO Plus Orders feed on or before that date. Accordingly, the Exchange would make SOF available for a period of time after June 1, 2010 to current SOF users that have not migrated to TOPO Plus Orders. In the event that an SOF user is unable to migrate to TOPO Plus Orders due to circumstances beyond their control, by June 1, 2010, the Exchange would apply the same monthly fee applicable to TOPO Plus Orders users that are Internal Distributors (as defined below) to such SOF users. Once a user has migrated from SOF to TOPO Plus Orders, they would not have the option of reverting to SOF. New subscribers currently do not have, and would not be given, the option to use SOF. New subscribers must subscribe to TOPO Plus Orders to receive the market data feed.

The Exchange proposes to charge monthly fees to distributors for use of TOPO Plus Orders. The amount of the monthly distributor fee would depend on whether the distributor is an "Internal Distributor" or an "External Distributor." The Exchange's fee schedule currently reflects that a "distributor" of NASDAQ OMX PHLX data is any entity that receives a feed or data file of data directly from NASDAQ OMX PHLX or indirectly through another entity and then distributes it either internally (within that entity) or externally (outside that entity), and that all distributors would be required to execute a NASDAQ OMX PHLX distributor agreement.

An Internal Distributor is an organization that subscribes to the Exchange for the use of TOPO or TOPO Plus Orders, and is permitted by agreement with the Exchange to provide TOPO or TOPO Plus Orders data to internal users (*i.e.,* users within their own organization). Under the proposal, Internal Distributors of TOPO Plus Orders would be charged a monthly fee of $4,000 per organization.[9] This charge would also apply to SOF users that have not migrated to TOPO Plus Orders on or before June 1, 2010.[10]

An External Distributor is an organization that subscribes to the Exchange for the use of TOPO Plus Orders, and is permitted by agreement with the Exchange to provide TOPO Plus Orders data to both internal users and to external users (*i.e.,* users outside of their own organization). External Distributors would be charged a monthly fee of $5,000 per organization.[11]

The Exchange also proposes to assess a monthly Subscriber Fee [12] on External Distributors of TOPO Plus Orders. The monthly Subscriber Fee would be assessed on a per-subscriber basis depending upon whether the subscriber is a Non-Professional Subscriber [13] or a Professional Subscriber.[14] The monthly Subscriber Fee assessed to External Distributors would be $1 per Non-Professional Subscriber. The monthly Subscriber Fee assessed to External Distributors would be $20 per Professional Subscriber. The Monthly Subscriber Fee would also apply to SOF users that have not migrated to TOPO Plus Orders on or before June 1, 2010.

III. Summary of Comments and Phlx's Response

The commenters argue that, contrary to the Exchange's claim in the Notice, at least some of the information contained in TOPO Plus should not qualify as "non-core." In addition, the commenters argue that the proposed fees for TOPO Plus are not fair and reasonable.[15]

A. Core Data vs. Non-Core Data

The commenters argue that the TOPO Plus Order feed should not be considered non-core data, but instead that portions of it (*e.g.,* single and complex order book, and Live Auction data) should be viewed as core data.[16] For example, the Lempert Letter states that TOPO Plus epitomizes the type of essential data that should be included in core data, and believes that Phlx's TOPO Plus is distinguishable from other data products approved by the Commission [17] because the SOF portion of TOPO Plus is critical information not available anywhere else.[18] In addition, the Lempert Letter states that the complex order book should be classified as core data because "customers have an expectation that those orders are displayed to all market participants in a transparent manner just as single option orders must be disseminated to OPRA." [19]

Phlx disagrees and states in its response letter that the Commission has defined "core data" as "the best priced quotations and comprehensive last sale reports of all market data," which is reported to OPRA and then disseminated to the market place as a whole.[20] Phlx states that non-core data is defined as anything other than core data that an exchange produces on a voluntary basis, such as depth-of-market data, and notes that data such as TOPO Plus is not required to be produced by Phlx.[21] The Exchange also notes that, while it provides last sale data regarding complex orders to OPRA as core data pursuant to the requirements of the OPRA Plan, it does not provide top of the complex order book data to the OPRA Plan because OPRA does not currently support such order types and the OPRA Plan explains that such information should not be reported to OPRA.[22]

[9] Internal Distributors of TOPO are currently charged a monthly fee of $2,000 per organization. This fee would continue to apply to Internal Distributors that distribute the TOPO feed.

[10] SOF users do not distribute SOF to any external users. Therefore, the Exchange would assess the lesser fee applicable to internal distributors of TOPO Plus Orders on SOF users that have not migrated as of June 1, 2010.

[11] External Distributors of TOPO are currently charged a monthly fee of $2,500 per organization. This fee would continue to apply to External Distributors that distribute the TOPO feed.

[12] A "subscriber" is a person or entity to whom the External Distributor provides the TOPO Plus Orders data feed.

[13] A Non-Professional Subscriber is a natural person who is neither: (i) Registered or qualified in any capacity with the Commission, the Commodities Futures Trading Commission, any state securities agency, any securities exchange or association, or any commodities or futures contract market or association; (ii) engaged as an "investment adviser" as that term is defined in Section 201(11) of the Investment Advisors Act of 1940 (whether or not registered or qualified under that Act); nor (iii) employed by a bank or other organization exempt from registration under federal or state securities laws to perform functions that would require registration or qualification if such functions were performed for an organization not so exempt.

[14] A Professional Subscriber is any subscriber that is not a Non-Professional Subscriber. If the NASDAQ OMX PHLX distributor agreement is signed in the name of a business or commercial entity, such entity would be considered a Professional Subscriber.

[15] In addition to the issues discussed here, the Commission notes the comment letters raise additional issues that are not pertinent or applicable to the subject matter of the current proposed rule change, and which are not discussed in this order.

[16] *See* Lempert Letter at 2–3; Sullivan Letter at 1; *see also* Waber Letter at 1–2.

[17] *See* Securities Exchange Act Release No. 59039 (December 2, 2008), 73 FR 74770 (December 9, 2008) (SR–NYSEArca–2006–21) ("NYSE Arca Order").

[18] *See* Lempert Letter at 2.

[19] *Id.* at 3.

[20] *See* Phlx Letter at 2 (citing the NYSE Arca Order).

[21] *Id.* at 2.

[22] *Id.* at 2–3.

B. Fees and Costs

The commenters also argue that the proposed fees are not fair and reasonable, and believe that the proposed fees discriminate against smaller broker-dealers because they would charge the same amount per broker-dealer regardless of the quantity of issues traded.[23] In addition, one commenter also expresses concern regarding the cost for broker-dealers of acquiring the technology necessary if they opt to receive the TOPO Plus raw data stream.[24]

In its response letter, Phlx contends that its TOPO Plus fees represent an equitable allocation of reasonable dues, fees and other charges among its members and issuers and other persons using its facilities.[25] Phlx states that the commenters in the Sullivan and Lempert Letters would be considered Internal Distributors, and thereby subject to the $4,000 fee, only if they choose to receive a raw data feed from Phlx or any other vendor where the subscriber can interact with data in its raw form.[26] In the Phlx Letter, the Exchange states that, based "upon the use of TOPO Plus by [the commenters] and the manner in which External Distributors would distribute TOPO Plus to them, Phlx concludes that [they] are neither Internal Distributors nor External Distributors of TOPO Plus," and therefore not subject to the monthly $4,000 (for Internal Distributors) or $5,000 (for External Distributors) in monthly fees.[27] Instead, Phlx believes they would be Professional Subscribers and subject to the fees charged them by the External Distributor from which they receive the feed. Such External Distributor would be assessed a $20 monthly fee for each of its Professional Subscribers, which Phlx believes would likely be passed through to subscribers, along with any other fees agreed upon by such External Distributor and its subscribers.[28]

IV. Discussion and Commission Findings

After careful review, the Commission finds that the proposal is consistent with the requirements of the Act and the rules and regulations thereunder applicable to a national securities exchange.[29] In particular, the Commission finds that the proposed rule change is consistent with the requirements of Section 6(b)(4) of the Act,[30] which requires that the rules of a national securities exchange provide for the equitable allocation of reasonable dues, fees and other charges among members and issuers and other persons using its facilities. The Commission also believes that the proposed rule change is consistent with Section 6(b)(5) of the Act,[31] which requires, among other things, that the rules of an exchange be designed to promote just and equitable principles of trade, to foster cooperation and coordination with persons engaged in regulating, clearing, settling, processing information with respect to, and facilitating transactions in securities, to remove impediments to and perfect the mechanism of a free and open market and a national market system, and, in general, to protect investors and the public interest; and not be designed to permit unfair discrimination between customers, issuers, brokers, or dealers. The Commission further believes that the proposed rule change is consistent with Section 6(b)(8) of the Act,[32] in that it does not impose any burden on competition not necessary or appropriate in furtherance of the purposes of the Act.

The Commission has reviewed the proposal using the approach set forth in the NYSE Arca Order for non-core market data fees.[33] There, the Commission stated that "core" data related to data "that Commission rules require to be consolidated and distributed to the public by a single central processor" whereas "no Commission rule requires exchange or market participants either to distribute non-core data to the public or to display non-core data to investors."[34] In the NYSE Arca Order, the Commission also stated that, "when possible, reliance on competitive forces is the most appropriate and effective means to assess whether the terms for the distribution of non-core data are equitable, fair and reasonable, and not unreasonably discriminatory."[35] It noted that the "existence of significant competition provides a substantial basis for finding that the terms of an exchange's fee proposal are equitable, fair, reasonable, and not unreasonably or unfairly discriminatory."[36] If an exchange "was subject to significant competitive forces in setting the terms of a proposal," the Commission will approve a proposal unless it determines that "there is a substantial countervailing basis to find that the terms nevertheless fail to meet an applicable requirement of the Exchange Act or the rules thereunder."[37]

As noted in the NYSE Arca Order, the standards in Section 6 of the Act do not differentiate between types of data and therefore apply to exchange proposals to distribute both core data and non-core data.[38] All U.S. options exchanges are required pursuant to the OPRA Plan to provide core data—the best-priced quotations and comprehensive last sale reports—to OPRA, which data is then distributed to the public pursuant to the OPRA Plan.[39] In contrast, individual exchanges and other market participants distribute non-core data voluntarily.[40] The mandatory nature of the core data disclosure regime leaves little room for competitive forces to determine products and fees.[41] Non-core data products and their fees are, by contrast, much more sensitive to competitive forces. The Commission therefore is able to rely on competitive forces in its determination of whether an exchange's proposal to distribute non-core data meets the standards of Section 6.[42]

The Commission agrees with Phlx that, contrary to the commenters' assertions, the Exchange's instant proposal relates to the distribution of non-core data. The Commission will, therefore, apply the market-based approach set forth in the NYSE Arca Order. Pursuant to this approach, the first step is to determine whether Phlx was subject to significant competitive forces in setting the terms of its non-core market data proposal, including the level of any fees. As in the Commission's NYSE Arca Order, in determining whether Phlx was subject to significant competitive forces in setting the terms of its proposal, the Commission has analyzed Phlx's need to attract order flow from market participants, and the availability to market participants of alternatives to purchasing Phlx's non-core market data.

The Commission believes that the options industry is currently subject to

[23] *See* Lempert Letter at 3; *see also* Sullivan Letter at 1 and Waber Letter at 1–2.

[24] *See* Lempert Letter at 3–4.

[25] *See* Phlx Letter at 3.

[26] *Id.* at 4.

[27] *Id.*

[28] *Id.* at 4.

[29] In approving this proposed rule change, the Commission has considered the proposed rule's impact on efficiency, competition, and capital formation. *See* 15 U.S.C. 78c(f).

[30] 15 U.S.C. 78f(b)(4).

[31] 15 U.S.C. 78f(b)(5).

[32] 15 U.S.C. 78f(b)(8).

[33] *See* NYSE Arca Order, *supra* note 17.

[34] *Id.* at 74771.

[35] *Id.*

[36] *Id.* at 74782.

[37] *Id.* at 74781.

[38] *Id.* at 74779.

[39] *See* Plan for Reporting of Consolidated Options Last Sale Reports and Quotation Information ("OPRA Plan"), Sections V(a)–(c).

[40] *See* NYSE Arca Order at 74779.

[41] *Id.*

[42] *Id.*

significant competitive forces.[43] It is generally accepted that the start of widespread multiple listing of options across exchanges in August 1999 greatly enhanced competition among the exchanges.[44] The launch of four new options exchanges since that time, numerous market structure innovations, and the start of the options penny pilot[45] have all further intensified intermarket competition for order flow.

Phlx currently competes with seven other options exchanges for order flow.[46] Attracting order flow is an essential part of Phlx's competitive success.[47] If Phlx cannot attract order flow to its market, it will not be able to execute transactions. If Phlx cannot execute transactions on its market, it will not generate transaction revenue. If Phlx cannot attract orders or execute transactions on its market, it will not have market data to distribute, for a fee or otherwise, and will not earn market data revenue and thus not be competitive with other exchanges that have this ability. This compelling need to attract order flow imposes significant pressure on Phlx to act reasonably in setting its fees for Phlx market data, particularly given that the market participants that will pay such fees often will be the same market participants from whom Phlx must attract order flow. These market participants include broker-dealers that control the handling of a large volume of customer and proprietary order flow. Given the portability of order flow from one exchange to another, any exchange that sought to charge unreasonably high data fees would risk alienating many of the same customers on whose orders it depends for competitive survival.

Phlx also notes that it currently trades options on seven proprietary index products that are not traded on any other exchange. These seven options currently represent less than 0.04% of Phlx's total contract volume.[48] The Commission believes that, given the small percentage of Phlx's total contract volume represented by these seven products, the inclusion of data on these products in the TOPO Plus Orders product does not confer market power on Phlx to compel market participants to purchase the entire Phlx data feed and the inclusion of depth-of-book data for these products in Phlx's TOPO Plus Orders product does not undermine the fact that Phlx is subject to significant competitive forces in setting the TOPO Plus fees.

In addition to the need to attract order flow, the availability of alternatives to Phlx's TOPO Plus product significantly affect the terms on which Phlx can distribute this market data.[49] In setting the fees for its TOPO Plus product, Phlx must consider the extent to which market participants would choose one or more alternatives instead of purchasing its data.[50] The most basic source of information concerning the depth generally available at an exchange is the complete record of an exchange's transactions that is provided in the core data feeds.[51] In this respect, the core data feeds that include an exchange's own transaction information are a significant alternative to the exchange's market data product.[52] Further, other options exchanges can produce their own data products, and thus are sources of potential competition for Phlx.[53] In addition, one or more securities firms could act independently and distribute their own order data, with or without a fee.

The Commission believes that there are a number of alternative sources of information that impose significant competitive pressures on Phlx in setting the terms for distributing its TOPO Plus product. The Commission believes that the availability of those alternatives, as well as Phlx's compelling need to attract order flow, impose significant competitive pressure on Phlx to act equitably, fairly, and reasonably in setting the terms of its proposal.[54]

Because Phlx was subject to significant competitive forces in setting the terms of the proposal, the Commission will approve the proposal in the absence of a substantial countervailing basis to find that the terms of the proposal fail to meet the applicable requirements of the Act or the rules thereunder. An analysis of the proposal does not provide such a basis. The fees do not unreasonably discriminate among types of distributors, such as by favoring participants in the Phlx market or penalizing participants in other markets.[55] The Commission notes that the Exchange will assess on External Distributors a monthly subscriber fee of $20 per Professional Subscriber, and $1 per Non-Professional Subscriber. The monthly subscriber fees assessed upon External Distributors are based upon the manner in which the data will ultimately be used, *i.e.,* for commercial vs. non-commercial purposes.[56]

As discussed above, the commenters also argue that the proposed TOPO Plus fees are not fair and reasonable, and that the fee amounts discriminate against smaller broker-dealers because the proposed fees would charge the same

[43] The Commission has previously stated that the options industry is subject to significant competitive forces. *See* Securities Exchange Act Release No. 59949 (May 20, 2009), 74 FR 25593 (May 28, 2009) (SR–ISE–2007–97) (order approving the International Stock Exchange's proposal establishing fees for a real-time depth of market data offering).

[44] *See, generally, Concept Release: Competitive Developments in the Options Markets,* Securities Exchange Act Release No. 49175 (date), 69 FR 6124 (February 9, 2004); *see also* Battalio, Robert, Hatch, Brian, and Jennings, Robert, *Toward a National Market System for U.S. Exchange-Listed Equity Options,* The Journal of Finance 59 (933–961); De Fontnouvelle, Patrick, Fishe, Raymond P., and Harris, Jeffrey H., *The Behavior of Bid-Ask Spreads and Volume in Options Markets During the Competition for Listings in 1999,* The Journal of Finance 58 (2437–2463); and Mayhew, Stewart, *Competition, Market Structure, and Bid-Ask Spreads in Stock Option Markets,* The Journal of Finance 57 (931–958).

[45] *See, e.g.,* Securities Exchange Act Release Nos. 55162 (January 24, 2007), 72 FR 4738 (February 1, 2007) (SR–Amex–2006–106); 55073 (January 9, 2007), 72 FR 4741 (February 1, 2007) (SR–BSE–2006–48); 55154 (January 23, 2007), 72 FR 4743 (February 1, 2007) (SR–CBOE–2006–92); 55161 (January 24, 2007), 72 FR 4754 (February 1, 2007) (SR–ISE–2006–62); 55156 (January 23, 2007), 72 FR 4759 (February 1, 2007) (SR–NYSEArca–2006–73); and 55153 (January 23, 2007), 72 FR 4553 (January 31, 2007) (SR–Phlx–2006–74).

[46] In its filing, Phlx discusses "the intensity of the competition for order flow," and states that "Phlx currently competes with seven other options exchanges for order flow" and "the ISE and CBOE enjoy close to thirty percent market share of volume, followed by NYSE Arca and Phlx at close to fifteen percent market share, followed by four other exchanges with meaningful market share." *See* Notice at 20025.

[47] Phlx states in its filing that "it has a compelling need to attract order flow from market participants * * * in order to maintain its share of trading volume." *Id.*

[48] Notice at 20025.

[49] *See* NYSE Arca Order at 74784.

[50] *See* NYSE Arca Order at 74783.

[51] *Id.*

[52] *Id.* Information on transactions executed on Phlx is available through OPRA.

[53] For example, ISE and CBOE each enjoy greater market shares than Phlx and thus have the ability to offer data products that could compete favorably with the Exchange's products.

[54] The Commission stated in the NYSE Arca Order that broker-dealers are not required to obtain depth-of-book order data to meet their duty of best execution. *See id.* at 74788 for a more detailed discussion. Likewise, the Commission does not view obtaining depth-of-book data as a necessary prerequisite to broker-dealers satisfying the duty of best execution with respect to the trading of standardized options.

[55] Phlx notes that TOPO Plus Orders are lower for Internal Distributors than for External Distributors. Because Internal Distributors are by definition more limited in the scope of their distribution of TOPO Plus Orders data than External Distributors, it is reasonable to expect that Internal Distributors will provide TOPO Plus Orders data to a smaller number of internal subscribers. Conversely, External Distributors can reasonably be expected to distribute the TOPO Plus Orders data to a higher number of subscribers because they do not have the same limitation. *See* Notice at 20025.

[56] The Commission notes that the CTA participants' fees have long provided for a lower fee for non-professional subscribers, and that the fees approved by the Commission in the NYSE Arca Order also provided for lower fees for non-professional subscribers. *See* NYSE Arca Order at 74772.

amount per broker-dealer regardless of the quantity of issues traded, and concern regarding the cost of acquiring the technology necessary if they opt to receive the TOPO Plus raw data stream.[57] The Commission believes that, in the Phlx Letter, the Exchange addressed the commenters' concerns in clarifying that the Exchange would only consider them to be Internal Distributors (and thus subject to a $4,000 monthly fee) if they opt to receive the TOPO Plus data as a raw data feed. The Exchange noted that the commenters could opt to receive TOPO Plus from an External Distributor, whereby they would be considered Professional Subscribers. In such a case, the proposal would charge an External Distributor $20 per month for each Professional Subscriber to whom it distributes the feed and Phlx notes that the External Distributor may pass through the Professional Subscriber fee to its subscribers, along with any other fees agreed upon, which should be significantly less than the monthly distributor fees proposed under the proposed rule change.

Though the Commission notes the commenters cost concerns regarding receiving the TOPO Plus raw data stream, if the commenters choose to receive the raw data stream, they would be subject to the same technology constraints and costs in dealing with the data as other market participants. In addition, the Commission notes that the Exchange has stated that it would make the SOF data feed available for those current SOF users that may encounter issues beyond their control that render them unable to migrate to TOPO Plus before June 1, 2010.

V. Conclusion

For the foregoing reasons, the Commission finds that the proposed rule change is consistent with the Act and the rules and regulations thereunder applicable to a national securities exchange and, in particular, with Section 6(b)(4), (5), and (8) of the Act.[58]

It is therefore ordered, pursuant to Section 19(b)(2) of the Act,[59] that the proposed rule change (SR–Phlx–2010–48) is approved.

For the Commission, by the Division of Trading and Markets, pursuant to delegated authority.[60]

Florence E. Harmon,

Deputy Secretary.

[FR Doc. 2010–13461 Filed 6–3–10; 8:45 am]

BILLING CODE 8010–01–P

[57] *See supra* notes 23–24 and accompanying text.

[58] 15 U.S.C. 78f(b)(4), (5), and (8).

[59] 15 U.S.C. 78s(b)(2).

[60] 17 CFR 200.30–3(a)(12).

DEPARTMENT OF TRANSPORTATION

Federal Railroad Administration

Adoption of Environmental Impact Statement; Availability of an Environmental Reevaluation

AGENCY: Federal Railroad Administration (FRA), Department of Transportation (DOT).

ACTION: Adoption and Recirculation of Final Environmental Impact Statement and Notice of Availability of Environmental Reevaluation.

SUMMARY: FRA is issuing this notice to advise the public and interested agencies that FRA has decided to adopt portions of the Environmental Impact Statement (EIS) issued by the Federal Transit Administration (FTA) in 2004 for the construction of the Transbay Transit Center (TTC) in San Francisco, California, in order to satisfy FRA's National Environmental Policy Act obligations related to funding the train box element of the TTC. Additionally, FRA has made available an Environmental Reevaluation of the EIS, updating certain relevant sections of the environmental analysis and describing design modifications to the train box. Under applicable Council on Environmental Quality (CEQ) regulations, FRA may adopt and recirculate the FTA's Final EIS since FRA's proposed action is substantially the same as the action covered by the FTA's EIS, and FRA has determined that the FTA EIS meets the standard for an adequate statement under the CEQ Regulations. In addition, under FRA's environmental procedures, FRA is required to issue a reevaluation of the adequacy, accuracy and validity of a final EIS in certain circumstances, which the agency has also done for this project.

FOR FURTHER INFORMATION CONTACT: Melissa DuMond, Environmental Protection Specialist, Federal Railroad Administration, 1200 New Jersey Ave., SE, MS–20, Washington, DC 20590, Telephone: (202) 493–6366.

SUPPLEMENTARY INFORMATION: The FTA and the Transbay Joint Powers Authority ("TJPA") prepared a joint environmental impact statement/environmental impact report for the Transbay Terminal/Caltrain Downtown/Extension Redevelopment Project ("2004 EIS"). The 2004 EIS included an analysis of the environmental impacts of the Caltrain Downtown Extension, the establishment of a redevelopment area plan, and the construction of the TTC on the site of the existing Transbay Terminal at First and Mission Streets in San Francisco, California. The purpose of the project is to improve public access to bus and rail services, modernize the Transbay Terminal and improve service, reduce non-transit vehicle usage, alleviate blight, and revitalize the Transbay Terminal area. The TTC will replace the existing Transbay Terminal, which was first built in 1939, because the existing Terminal does not currently meet seismic safety or space utilization standards. In addition to the above mentioned benefits, the 2004 EIS contemplated a future high-speed rail system at the TTC in the form of a rail box that could accommodate high-speed rail trains. On the basis of the 2004 EIS, the FTA issued a Record of Decision (ROD) in 2005. In response to project modifications and refinements, the TJPA adopted five addenda to the EIS, which are described in the Environmental Reevaluation.

The Transbay Terminal project is divided into two construction phases, which have been refined through the five addenda to the 2004 EIS. Phase 1, which relates to the portion of the 2004 EIS adopted by FRA, includes the above-grade portion of the TTC and limited below-grade structural support work including the train box. Phase 2 includes the construction of the Downtown Extension. Under this notice, the FRA is adopting the portions of the 2004 EIS dealing with Phase 1 construction as it directly relates to the FRA's funding of the train box under the High-Speed Intercity Passenger Rail Program.

The American Recovery and Reinvestment Act ("Recovery Act") provided $8 billion to the FRA as initial funding for the High-Speed Intercity Passenger Rail Program. The Secretary of Transportation selected the California High-Speed Rail Authority ("CHSRA") to receive up to $2.25 billion from the Recovery Act to fund the development of high-speed intercity passenger rail service in California. As the TTC has been demonstrated to be the only feasible and practicable site in downtown San Francisco for the northern terminus of the California high-speed rail system, FRA proposes to provide up to $400 million of the CHSRA Recovery Act funding to the TJPA in order to construct the train box designed to accommodate the future high-speed rail service at the TTC. Constructing the train box now results in substantial savings over options involving later construction of high-speed rail facilities under an already completed TTC.

The CEQ regulations allow Federal agencies, such as the FRA, to adopt

environmental documents prepared by another Federal agency when the proposed actions are "substantially the same" and the adopting agency has concluded that the initial statement meets the standards for an adequate statement under the CEQ regulations. 40 CFR 1506.3. Furthermore, the CEQ regulations state that when the actions are substantially the same, "the agency adopting the agency's statement is not required to recirculate it except as a final statement." *Id.* FRA has conducted an independent review of the 2004 EIS for the purpose of determining whether FRA could adopt it pursuant to 40 CFR 1506.3. FRA's review concluded that FRA's action in funding the train box is substantially the same as the action documented in the 2004 EIS, that the EIS adequately assessed the environmental impacts associated with the train box and meets the standards of the CEQ NEPA Regulations (40 CFR parts 1500 through1508), and that the FRA can adopt the 2004 EIS. CEQ's regulations implementing NEPA strongly encourage agencies to reduce paperwork and duplication. 40 CFR 1500.4. One of the methods identified by CEQ to accomplish this goal is adopting the environmental documents prepared by other agencies in appropriate circumstances. 40 CFR 1500.4(n), 1500.5(h), and 1506.3.

In order to comply with its obligations under Section 106 of the National Historic Preservation Act, 16 U.S.C. 470 *et seq.,* the FRA also intends to join the existing Memorandum of Agreement (MOA) between the FTA and the California State Historic Preservation Officer. That MOA describes the roles and responsibilities of the parties and will allow FRA to take into account the potential effect of the FRA's action on historic properties pursuant to the requirements of Section 106. In addition, the 2004 EIS includes a final determination according to the requirements of Section 4(f) of the Department of Transportation Act of 1966. 49 U.S.C. 303. Section 4(f) requires that projects undertaken by DOT must avoid using parks, recreational areas, wildlife and waterfowl refuges, or public and private historical sites unless there is no feasible and prudent alternative, and the action includes all possible planning to minimize harm to the property. By adopting the 2004 EIS, the FRA is also adopting the FTA's Final Section 4(f) Evaluation and will therefore be in compliance with the requirements of that statute.

Furthermore, FRA's Procedures for Considering Environmental Impacts (64 FR 28545, May 26, 1999) require the reevaluation of a Final EIS if major steps toward implementation of the proposed action have not commenced within three years from the date of approval of the final EIS. The reevaluation is required to determine whether the final EIS is still accurate, adequate and valid. As described above, the train box was an element of the 2004 EIS; however, design modifications to the train box occurred, and the Environmental Reevaluation provides an update to those sections for which new information is available that is pertinent to the proposed action in Phase 1 of the Transbay Terminal project. In accordance with the Environmental Protection Agency's (EPA) requirements regarding the filing of EISs, FRA has provided the EPA with a notice of adoption and five copies of the FTA's Final EIS and the Environmental Reevaluation. EPA will publish a notice of availability of the Final EIS in the **Federal Register** consistent with its usual practices. Because of the multi-volume size of the FEIS and its continued availability in libraries in the affected community and on the TJPA's and FRA's Web sites, FRA is not republishing the document on its own. This would be costly, defeat CEQ's goals of reducing paperwork and duplication of effort, and be of little or no additional value to other agencies or the public. The Environmental Reevaluation is also available on the TJPA's Web site (*www.transbaycenter.org*), on the FRA's Web site (*http://www.fra.dot.gov*), and at libraries in San Francisco, San Bruno, and Oakland, California. FRA has mailed a notification of FRA's adoption and identified places where the 2004 EIS and the Environmental Reevaluation are available to persons and parties of record who have participated in the most recent phase of the 2004 EIS process, as well as to elected officials, local transit agencies, regional agencies, local media, and potentially interested community organizations. Comments on the 2004 EIS or the Environmental Reevaluation may be submitted no later than June 28, 2010 to Melissa DuMond at the address noted above.

The final stage in the environmental review process under NEPA is the issuance of a Record of Decision by the agency describing the agency's decision and the basis for it. Under the timelines included in the CEQ regulation (40 CFR 1506.10), a Record of Decision cannot be issued by an agency earlier than thirty days after the EPA publishes its **Federal Register** notice notifying the public of the availability of the final EIS. Any Record of Decision issued by the FRA will be consistent with 40 CFR 1505.2 and section 15 of FRA's Procedures for Considering Environmental Impacts.

Accordingly, FRA has adopted and is recirculating the 2004 EIS and has issued an Environmental Reevaluation.

Issued in Washington, DC, on May 28, 2010.

Joseph C. Szabo,

Administrator.

[FR Doc. 2010–13398 Filed 6–3–10; 8:45 am]

BILLING CODE 4910–06–P

DEPARTMENT OF TRANSPORTATION

Federal Highway Administration

Environmental Impact Statement: Calvert and St. Mary's Counties, MD

AGENCY: Federal Highway Administration (FHWA), DOT.

ACTION: Notice of withdrawal.

SUMMARY: The FHWA is issuing this notice to advise the public that a prior Notice of Intent to prepare an Environmental Impact Statement (EIS) for the proposed roadway widening and bridge replacement project in Calvert and St. Mary's Counties, Maryland (**Federal Register** Vol. 72, No. 203; FR Doc. 07–5190) is being withdrawn and an Environmental Assessment (EA), in lieu of an EIS, is being prepared for this proposed highway project.

FOR FURTHER INFORMATION CONTACT: Ms. Jeanette Mar, Environmental Program Manager, Federal Highway Administration, DelMar Division Office, City Crescent Building, Suite 2450, 10 South Howard Street, Baltimore, Maryland 21201; Telephone: (410) 779–7152, e-mail address: *Jeanette.Mar@dot.gov.*

SUPPLEMENTARY INFORMATION: The Federal Highway Administration (FHWA), in cooperation with the Maryland State Highway Administration (SHA), is advising the general public that SHA conducted studies of the potential environmental impacts associated with the proposed roadway widening and bridge replacement of MD 4 from MD 2 to MD 235 in Calvert and St. Mary's Counties, a distance of approximately 4.1 miles.

Improvements to the corridor are necessary to improve existing capacity and traffic operations, and to increase vehicular, pedestrian and bicycle safety along MD 4, while supporting existing and planned development in the area. Improvements to the bridge are necessary due to inadequate shoulder widths, major traffic delays and/or closures currently occur along the Thomas Johnson Memorial Bridge during crashes and maintenance

activities. In addition, the rate on MD 4 from FDR Boulevard to MD 235, as well as the rear end collision rate across the Thomas Johnson Memorial Bridge, is greater than the statewide average.

Alternatives under consideration include taking no action and widening existing MD 4 to a four-lane divided highway, with various options for bridge improvements and/or reconstruction. The EA will be available for public and agency review and comment prior to a Public Hearing. Public notice will be given of the availability of the EA for review and of the time and place of this hearing. A Scoping Meeting was held in May 2007, and two Open House Workshops were held in June 2008 to solicit opinions and ideas on proposed improvements from local citizens.

To ensure that the full range of issues related to this proposed action are addressed and all significant issues identified, comments and suggestions are invited from all interested parties. Comments or questions concerning this proposed action and the determination that an EA is the proper environmental document should be directed to FHWA at the address provided above.

(Catalog of Federal Domestic Assistance Program Number 20.205, Highway Research, Planning and Construction. The regulations implementing Executive Order 12372 regarding intergovernmental consultation on Federal programs and activities apply to this program.)

Issued on May 27, 2010.

Jeanette Mar,

Environmental Program Manager.

[FR Doc. 2010–13399 Filed 6–3–10; 8:45 am]

BILLING CODE 4910–22–P

DEPARTMENT OF TRANSPORTATION

Federal Highway Administration

Tennessee Division: Notice To Rescind a Notice of Intent (NOI) to Prepare an Environmental Impact Statement (EIS): State Route 91 Improvements in Elizabethton, Carter County, TN

AGENCY: Federal Highway Administration (FHWA), DOT.

ACTION: Rescind NOI to prepare an EIS.

SUMMARY: The FHWA is issuing this notice to advise the public that the NOI published on February 22, 2007, at 72 FR 8054, to prepare an EIS for the State Route 91 Improvements in Elizabethton, Carter County, Tennessee, is being rescinded.

FOR FURTHER INFORMATION CONTACT: Mr. Charles J. O'Neill, Planning and Program Management Team leader, FHWA–Tennessee Division Office, 404 BNA Drive, Suite 508, Nashville, TN 37217.

SUPPLEMENTARY INFORMATION: The FHWA, in cooperation with the Tennessee Department of Transportation (TDOT) is rescinding the NOI to prepare an EIS for the State Route 91 Improvements in Elizabethton, Carter County, Tennessee.

The proposed project calls for improving the State Route 91 corridor from west of State Route 362 to just west of State Route-37 (U.S. 19E), a distance of approximately four miles. The purpose of the project is to improve traffic flow, travel time, and mobility; reduce the conflicts between vehicles on State Route 91; and create an easily navigable route to area businesses along State Route 91. Since the NOI to prepare an EIS was published in the Federal Register on February 22, 2007, TDOT has conducted public involvement and agency coordination, developed a purpose and need for the project, and developed preliminary alternatives to be examined in the EIS. The preliminary alternatives included No-Build, a Transportation System Management (TSM) alternative, build alternatives that would construct a roadway on new locations to the north and to the south of the existing roadway, and an upgrade to existing State Route 91. Preliminary screenings identified sensitive environmental features associated with new location alternatives that could result in potentially significant adverse impacts.

FHWA and TDOT have determined that a combination of TSM and upgrade improvements along existing State Route 91 would meet the need and purpose of the project and could be accomplished without potentially significant adverse impacts to sensitive environmental features. FHWA and TDOT will evaluate these improvements of State Route 91 along the existing route as a Categorical Exclusion.

Comments and questions concerning the proposed action should be directed to FHWA at the address provided above.

(Catalog of Federal Domestic Assistance Program Number 20.205, Highway Planning and Construction. The regulations implementing Executive Order 12372 regarding intergovernmental consultation on Federal programs and activities apply to this proposed program.)

Charles J. O'Neill,

Planning and Program Management Team Leader, Nashville, TN.

[FR Doc. 2010–13428 Filed 6–3–10; 8:45 am]

BILLING CODE 4910–22–P

DEPARTMENT OF TRANSPORTATION

Federal Motor Carrier Safety Administration

Withdrawal of Regulatory Guidance Concerning the Federal Motor Carrier Safety Regulations

AGENCY: Federal Motor Carrier Safety Administration (FMCSA), DOT.

ACTION: Notice; withdrawal of regulatory guidance.

SUMMARY: FMCSA announces the withdrawal of a number of items of regulatory guidance concerning the Federal Motor Carrier Safety Regulations (FMCSRs) that are now obsolete as a result of rules published by FMCSA and found in 49 CFR part 393, "Parts and accessories necessary for safe operation." All prior interpretations and regulatory guidance concerning the applicability of the obsolete FMCSRs that were published in the **Federal Register**, as well as memoranda and letters concerning those regulations, may no longer be relied upon as authoritative if they are inconsistent with the revised and/or amended regulations.

DATES: *Effective Date:* This regulatory guidance is effective on June 4, 2010.

FOR FURTHER INFORMATION CONTACT: Ms. Deborah M. Freund, Vehicle and Roadside Operations Division, Office of Bus and Truck Standards and Operations, (202) 366–5370, Federal Motor Carrier Safety Administration, 1200 New Jersey Ave., SE., Washington, DC 20590–0001.

SUPPLEMENTARY INFORMATION:

Legal Basis

The Motor Carrier Safety Act of 1984 (Pub. L. 98–554, Title II, 98 Stat. 2832, October 30, 1984) (the 1984 Act) provides authority to regulate drivers, motor carriers, and vehicle equipment. It requires the Secretary of Transportation (Secretary) to prescribe regulations on minimum safety standards for commercial motor vehicle (CMV) safety. At a minimum, the regulations shall ensure that: (1) CMVs are maintained, equipped, loaded, and operated safely; (2) the responsibilities imposed on operators of CMVs do not impair their ability to operate the vehicles safely; (3) the physical condition of operators of CMVs is adequate to enable them to operate the vehicles safely; and (4) the operation of CMVs does not have a deleterious effect on the physical condition of the operators (49 U.S.C. 31136(a)). Section 211 of the 1984 Act also grants the Secretary broad power, in carrying out

motor carrier safety statutes and regulations, to "prescribe recordkeeping and reporting requirements" and to "perform other acts the Secretary considers appropriate" (49 U.S.C. 31133(a)(8) and (10)). The FMCSA Administrator has been delegated authority under 49 CFR 1.73(g) to carry out the functions vested in the Secretary by 49 U.S.C. chapter 311, subchapters I and III, relating to CMV programs and safety regulation.

Members of the motor carrier industry and other interested parties may access FMCSA's guidance through FMCSA's Internet site at *http://www.fmcsa.dot.gov.* Specific questions addressing any of the interpretive material withdrawn in this document should be directed to the contact person listed earlier under **FOR FURTHER INFORMATION CONTACT**, or to the FMCSA Division Office in each State.

Basis for the Notice

On February 12, 2008, the Commercial Vehicle Safety Alliance (CVSA) petitioned FMCSA to withdraw certain regulatory guidance concerning 49 CFR part 393. The regulatory guidance that was the subject of the petition had been made obsolete by final rules concerning (1) protection against shifting and falling cargo, and (2) general amendments to Part 393 of the FMCSRs.

For the reasons set forth below, FMCSA granted the CVSA's petition on July 9, 2009:

Protection Against Shifting and Falling Cargo

FMCSA published a final rule on September 27, 2002 (67 FR 61212), revising the regulations in 49 CFR part 393 concerning protection against shifting and falling cargo for CMVs engaged in interstate commerce. The previous cargo securement regulations required all cargo-carrying CMVs to be equipped with devices that provided protection against shifting or falling cargo and that met the requirements of one of four "options" (Options A, B, C, or D). The September 2002 cargo securement final rule replaced Options A through D with: (1) More comprehensive, performance-based, general requirements; and (2) detailed requirements for a number of specific commodities, the proper securement of which generated the most disagreement between industry and enforcement agencies. Because Options A through D are no longer a part of the cargo securement regulations, the regulatory guidance provided in questions 2, 5, and 6 to section 393.100 (reference 62 FR 16419, dated April 4, 1997) is no longer valid and is hereby withdrawn.

General Amendments to Part 393

FMCSA published a final rule on August 15, 2005 (70 FR 48008), amending part 393 of the FMCSRs. As part of this rule, FMCSA clarified that CMVs must have both windshield wiping and windshield washing systems that meet the requirements of Federal Motor Vehicle Safety Standard No. 104, "Windshield wiping and washing systems." As such, the regulatory guidance provided in question 1 to section 393.78 (reference 62 FR 16418, dated April 4, 1997) is no longer valid and is hereby withdrawn.

FMCSA further clarified that the requirements of section 393.201 apply to all CMVs, including trailers, and not only buses, trucks, and truck tractors. As such, the regulatory guidance provided in question 2 to section 393.201 (reference 62 FR 16419, dated April 4, 1997) is no longer valid and is hereby withdrawn.

FMCSA also revised section 393.201(d) to make the regulation more practical. Paragraph (d) was intended to prohibit welding on vehicle frames constructed of certain types of steel that are weakened by the welding process. However, the previous wording was overly restrictive. To address this issue, paragraph (d) now allows welding which is performed in accordance with the vehicle manufacturer's recommendations, and therefore, the regulatory guidance provided in question 3 to section 393.201 is now redundant, no longer necessary, and hereby withdrawn.

Decision

For the reasons presented above, FMCSA removes the following regulatory guidance: Section 393.78, question 1; section 393.100, questions 2, 5, and 6; and section 393.201, questions 2 and 3, published online at *http://www.fmcsa.dot.gov/rules-regulations/administration/fmcsr/FmcsrGuideDetails.aspx?menukey=393.*

Issued on: May 26, 2010.

Anne S. Ferro,

Administrator.

[FR Doc. 2010–13401 Filed 6–3–10; 8:45 am]

BILLING CODE 4910–EX–P

DEPARTMENT OF TRANSPORTATION

National Highway Traffic Safety Administration

Petition for Exemption From the Vehicle Theft Prevention Standard; Mercedes-Benz

AGENCY: National Highway Traffic Safety Administration (NHTSA), Department of Transportation (DOT).

ACTION: Grant of petition for exemption.

SUMMARY: This document grants in full the Mercedes-Benz USA, LLC (MBUSA) petition for an exemption of the SL–Class Line Chassis vehicle line in accordance with 49 CFR part 543, *Exemption from the Theft Prevention Standard.* This petition is granted because the agency has determined that the antitheft device to be placed on the line as standard equipment is likely to be as effective in reducing and deterring motor vehicle theft as compliance with the parts-marking requirements of the Theft Prevention Standard (49 CFR part 541).

DATES: The exemption granted by this notice is effective beginning with the 2011 model year.

FOR FURTHER INFORMATION CONTACT: Ms. Rosalind Proctor, Office of International Policy, Fuel Economy and Consumer Programs, NHTSA,1200 New Jersey Avenue, SE., West Building, W43–302, Washington, DC 20590. Ms. Proctor's telephone number is (202) 366–0846. Her fax number is (202) 493–0073.

SUPPLEMENTARY INFORMATION: In a petition dated April 26, 2010, MBUSA requested an exemption from the parts-marking requirements of the Theft Prevention Standard (49 CFR part 541) for the new MY 2011 SL–Class Line Chassis vehicle line. The petition requested an exemption from parts-marking pursuant to 49 CFR part 543, *Exemption from Vehicle Theft Prevention Standard,* based on the installation of an antitheft device as standard equipment for an entire vehicle line.

Under § 543.5(a), a manufacturer may petition NHTSA to grant an exemption for one vehicle line per model year. In its petition, MBUSA provided a detailed description and diagram of the identity, design, and location of the components of the antitheft device for its new vehicle line. MBUSA will install a passive ignition immobilizer (FBS III) and access code protected locking system as standard equipment on its new vehicle line beginning with MY 2011. MBUSA stated that its immobilizer device is an interlinked system of control units which

collectively perform the immobilizer function. The interlinked system includes the engine, electronic ignition starter, transmitter key, electronic control unit and the fuel injection system which independently calculates and matches a unique code. MBUSA stated that if a relevant query from the vehicle to the transmitter key is valid, operation of the vehicle is authorized. MBUSA stated that the device will also incorporate an audible and visible alarm feature as standard equipment. MBUSA's submission is considered a complete petition as required by 49 CFR 543.7, in that it meets the general requirements contained in § 543.5 and the specific content requirements of § 543.6.

MBUSA stated that activation of the device occurs automatically when the key is removed from the ignition switch, whether the doors are open or not. Once activated, only a valid key with the correct code inserted into the ignition switch will disable immobilization and allow the vehicle to start and operate. MBUSA further stated that no other action by the operator other than turning the key is required to activate or deactivate the immobilizer.

In its submission, MBUSA stated that a locking/unlocking function is also incorporated into the device. The data exchange between the transmitter key and the vehicle's central controller for the lock/unlock function is carried out by radio signal. The unlocking signal from the remote key sends a message to the vehicle's central electronic control unit and a permanent code is verified and compared to the stored code in the Signal Acquisition Module (SAM). MBUSA stated that the locking system will only unlock the doors, tailgate and fuel filler cover when both codes match.

In addressing the specific content requirements of § 543.6, MBUSA provided information on the reliability and durability of its proposed device. To ensure reliability and durability of the immobilizer device, MBUSA conducted performance tests based on its Economic Commission for Europe (ECE) specified standards. MBUSA provided a detailed list of the tests conducted and believes that the device is reliable and durable since the device complied with the specified requirements for each test. MBUSA also stated that it believes that the immobilizer device offered on the SL-class vehicle will be at least as effective as compliance with the parts-marking requirements of the theft prevention standard and as effective in deterring theft as it has been in other MBUSA vehicle lines for which theft data has been published. MBUSA submitted theft rate data published by the agency comparing its proposed device to antitheft devices already installed in the Aston Martin Vantage, BMW 6-series and Porsche 911 vehicle lines. MBUSA stated it believes that an immobilizer device was effective in contributing to a 63.5% reduction in the theft rate for the Aston Martin Vantage Line. Specifically, data published by the agency showed a theft rate of 0.0000 for the calendar year (CY) 2006 Aston Martin Vantage vehicle line and 0.6784 for the MY 2007. MBUSA also referenced theft data published by the agency which showed that the average theft rate for the BMW 6-series with an immobilizer was 2.3505 in MY/CY 2005 and 1.6227 in MY/CY 2007. MBUSA stated that it believes that this data also indicates that the immobilizer device was effective in contributing to an additional (31%) reduction in the theft rate of the BMW 6-series vehicle line. MBUSA also referenced theft rate data published by the agency for the Porsche 911 vehicle line (with an immobilizer) showing a theft rate experience of 0.8342 and 0.000 for MY/CY's 2005 and 2006 respectively. MBUSA stated that it believes that the data indicates that the immobilizer device was effective in contributing to a 13.8% reduction in the theft rate of the Porsche 911 vehicle line.

MBUSA stated that its proposed device is also functionally similar to the antitheft devices installed on the Mercedes-Benz E–Class, C–Class and SLK Class chassis vehicles which the agency has already exempted from the parts-marking requirements. In its submission, MBUSA concluded that lower theft rates could be expected from vehicles equipped with immobilizer devices as standard equipment. MBUSA stated it believes that the data indicated the immobilizer device was effective in contributing to an average reduction of 29.9% in the theft rate of the SL–Line Chassis when theft rates for the vehicle line dropped from 1.4170 (CY 2005) to 1.0460 (CY 2007).

Based on the supporting evidence submitted by MBUSA on the device, the agency believes that the antitheft device for the SL–Class Line Chassis vehicle line is likely to be as effective in reducing and deterring motor vehicle theft as compliance with the parts-marking requirements of the Theft Prevention Standard (49 CFR part 541). The agency concludes that the device will provide the five types of performance listed in § 543.6(a)(3): promoting activation; attracting attention to the efforts of an unauthorized person to enter or move a vehicle by means other than a key; preventing defeat or circumvention of the device by unauthorized persons; preventing operation of the vehicle by unauthorized entrants; and ensuring the reliability and durability of the device.

Pursuant to 49 U.S.C. 33106 and 49 CFR 543.7(b), the agency grants a petition for exemption from the parts-marking requirements of part 541 either in whole or in part, if it determines that, based upon substantial evidence, the standard equipment antitheft device is likely to be as effective in reducing and deterring motor vehicle theft as compliance with the parts-marking requirements of part 541. The agency finds that MBUSA has provided adequate reasons for its belief that the antitheft device for the MBUSA new vehicle line is likely to be as effective in reducing and deterring motor vehicle theft as compliance with the parts-marking requirements of the Theft Prevention Standard (49 CFR part 541). This conclusion is based on the information MBUSA provided about its device.

For the foregoing reasons, the agency hereby grants in full MBUSA's petition for exemption for the SL–Class line Chassis vehicle line from the parts-marking requirements of 49 CFR part 541, beginning with the 2011 model year vehicles. The agency notes that 49 CFR part 541, appendix A–1, identifies those lines that are exempted from the Theft Prevention Standard for a given model year. 49 CFR 543.7(f) contains publication requirements incident to the disposition of all part 543 petitions. Advanced listing, including the release of future product nameplates, the beginning model year for which the petition is granted and a general description of the antitheft device is necessary in order to notify law enforcement agencies of new vehicle lines exempted from the parts-marking requirements of the Theft Prevention Standard.

If MBUSA decides not to use the exemption for this line, it must formally notify the agency. If such a decision is made, the line must be fully marked according to the requirements under 49 CFR 541.5 and 541.6 (marking of major component parts and replacement parts).

NHTSA notes that if MBUSA wishes in the future to modify the device on which this exemption is based, the company may have to submit a petition to modify the exemption. Section 543.7(d) states that a part 543 exemption applies only to vehicles that belong to a line exempted under this part and equipped with the anti-theft device on which the line's exemption is based. Further, § 543.9(c)(2) provides for the

submission of petitions "to modify an exemption to permit the use of an antitheft device similar to but differing from the one specified in that exemption."

The agency wishes to minimize the administrative burden that § 543.9(c)(2) could place on exempted vehicle manufacturers and itself. The agency did not intend in drafting part 543 to require the submission of a modification petition for every change to the components or design of an antitheft device. The significance of many such changes could be *de minimis.* Therefore, NHTSA suggests that if the manufacturer contemplates making any changes, the effects of which might be characterized as *de minimis,* it should consult the agency before preparing and submitting a petition to modify.

Authority: 49 U.S.C. 33106; delegation of authority at 49 CFR 1.50.

Issued on: June 1, 2010.

Stephen R. Kratzke,

Associate Administrator for Rulemaking.

[FR Doc. 2010–13466 Filed 6–3–10; 8:45 am]

BILLING CODE 4910–59–P

DEPARTMENT OF TRANSPORTATION

National Highway Traffic Safety Administration

[Docket No. NHTSA–2010–0060; Notice 1]

Ford Motor Company, Receipt of Petition for Decision of Inconsequential Noncompliance

The Ford Motor Company (Ford) [1] has determined that certain model year 2010 Ford Taurus passenger cars, built from June 1, 2009, through October 5, 2009, and certain model year 2010 Lincoln MKT multi-purpose vehicles, built from June 29, 2009, through October 8, 2009, do not fully meet the windshield marking requirements of paragraph S6.2 of Federal Motor Vehicle Safety Standard (FMVSS) No. 205 *Glazing Materials.* On November 12, 2009, Ford filed an appropriate report pursuant to 49 CFR part 573, *Defect and Noncompliance Responsibility and Reports.*

Pursuant to 49 U.S.C. 30118(d) and 30120(h) (see implementing rule at 49 CFR part 556), Ford has petitioned for an exemption from the notification and remedy requirements of 49 U.S.C. Chapter 301 on the basis that this noncompliance is inconsequential to motor vehicle safety.

This notice of receipt of Ford's petition is published under 49 U.S.C. 30118 and 30120 and does not represent any agency decision or other exercise of judgment concerning the merits of the petition.

Ford estimates approximately 15,663 model year 2010 Ford Taurus passenger car models, built from June 1, 2009, through October 5, 2009, at Ford's Chicago Assembly Plant, and approximately 3,565 model year 2010 Lincoln MKT multi-purpose vehicle models, built from June 29, 2009, through October 8, 2009, at Ford's Oakville Assembly Plant, a total of approximately 19,228 vehicles are not in compliance with paragraph S6.2 of FMVSS No. 205 relating to windshield marking.[2]

Paragraph S6.2 of FMVSS No. 205 requires in pertinent part:

S6.2 A prime glazing manufacturer certifies its glazing by adding to the marks required by section 7 of ANSI/SAE Z26.1–1996, in letters and numerals of the same size, the symbol "DOT" and a manufacturer's code mark that NHTSA assigns to the manufacturer. * * *

Ford describes the noncompliance as the improper location of the "AS1" glazing marking. The standard requires that the "AS1" glazing marking be located in close proximity to the official designated trademark area (lower portion) of the windshield. However, Ford said that the "AS1" symbol is marked in the upper portion of the windshield, on both sides of the affected windshields and that the windshields conform to all other FMVSS No. 205 requirements.

Ford states the basis for why they believe this noncompliance is inconsequential to motor vehicle safety as:

No other Ford vehicles are affected by this condition and we are not aware of any field or owner complaints related to this condition. In our judgment, the condition does not present a risk to motor vehicle safety because the windshield fully meets the performance and physical requirements of FMVSS [No.] 205. Additionally repair service will be unaffected because the selection of replacement windshields is typically done utilizing a distributor, a catalog, or NAGS [National Auto Glass Specification] number. Furthermore, repairers will be able to determine the appropriate glazing because the upper portions of the windshield are properly labeled with the "AS1," designation, the glazing is clearly marked as "Laminated," and all other markings required by FMVSS [No.] 205 are properly labeled.

Additionally, Ford stated that Zeledyne discovered the noncompliance during its trademark content project study in which its laboratory personnel noticed that the "AS1" symbol was missing from the designated trademark location on the lower corner of the windshields for the affected vehicles.

Ford also has informed NHTSA that it has corrected the problem that caused these errors so that they will not be repeated in future production.

Therefore, Ford believes that the described noncompliance does not present a risk to motor vehicle safety. Thus, Ford requests that its petition, to exempt it from providing recall notification of noncompliance as required by 49 U.S.C. 30118 and remedying the recall noncompliance as required by 49 U.S.C. 30120, should be granted.

NHTSA notes that the statutory provisions (49 U.S.C. 30118(d) and 30120(h)) that permit manufacturers to file petitions for a determination of inconsequentiality allow NHTSA to exempt manufacturers only from the duties found in sections 30118 and 30120, respectively, to notify owners, purchasers, and dealers of a defect or noncompliance and to remedy the defect or noncompliance.

Interested persons are invited to submit written data, views, and arguments on this petition. Comments must refer to the docket and notice number cited at the beginning of this notice and be submitted by any of the following methods:

a. By mail addressed to: U.S. Department of Transportation, Docket Operations, M–30, West Building Ground Floor, Room W12–140, 1200 New Jersey Avenue, SE., Washington, DC 20590.

b. By hand delivery to U.S. Department of Transportation, Docket Operations, M–30, West Building Ground Floor, Room W12–140, 1200 New Jersey Avenue, SE., Washington, DC 20590. The Docket Section is open on weekdays from 10 a.m. to 5 p.m. except Federal Holidays.

c. *Electronically:* by logging onto the Federal Docket Management System (FDMS) Web site at *http://www.regulations.gov/.* Follow the online instructions for submitting comments. Comments may also be faxed to 1–202–493–2251.

Comments must be written in the English language, and be no greater than 15 pages in length, although there is no limit to the length of necessary attachments to the comments. If comments are submitted in hard copy form, please ensure that two copies are provided. If you wish to receive

[1] Ford is a domestic manufacturer of motor vehicles, incorporated under the laws of the State of Delaware, with offices at The American Road, Dearborn, Michigan.

[2] Ford additionally notes that the nonconforming windshields installed in the subject vehicles were manufactured by Zeledyne, Inc. (Zeledyne), at their facility located at 7200 W. Centennial Boulevard, Nashville, TN 37209.

confirmation that your comments were received, please enclose a stamped, self-addressed postcard with the comments. Note that all comments received will be posted without change to *http://www.regulations.gov*, including any personal information provided.

Documents submitted to a docket may be viewed by anyone at the address and times given above. The documents may also be viewed on the Internet at *http://www.regulations.gov* by following the online instructions for accessing the dockets. DOT's complete Privacy Act Statement is available for review in the **Federal Register** published on April 11, 2000 (65 FR 19477–78).

The petition, supporting materials, and all comments received before the close of business on the closing date indicated below will be filed and will be considered. All comments and supporting materials received after the closing date will also be filed and will be considered to the extent possible. When the petition is granted or denied, notice of the decision will be published in the **Federal Register** pursuant to the authority indicated below.

Comment closing date: July 6, 2010.

Authority: (49 U.S.C. 30118, 30120: delegations of authority at CFR 1.50 and 501.8).

Issued on: May 27, 2010.

Claude H. Harris,

Director, Office of Vehicle Safety Compliance.

[FR Doc. 2010–13402 Filed 6–3–10; 8:45 am]

BILLING CODE 4910–59–P

DEPARTMENT OF THE TREASURY

Office of the Comptroller of the Currency

Agency Information Collection Activities: Submission for OMB Review; Comment Request

AGENCY: Office of the Comptroller of the Currency (OCC), Treasury.

ACTION: Notice and request for comment.

SUMMARY: The OCC, as part of its continuing effort to reduce paperwork and respondent burden, invites the general public and other Federal agencies to comment on a continuing information collection, as required by the Paperwork Reduction Act of 1995. An agency may not conduct or sponsor, and a respondent is not required to respond to, an information collection unless it displays a currently valid Office of Management and Budget (OMB) control number. The OCC is soliciting comment concerning an extension of OMB approval of the information collection titled, "Disclosure of Financial and Other Information by National Banks (12 CFR 18)." OCC also gives notice that it has sent this collection to OMB for review.

DATES: Comments must be submitted on or before July 6, 2010.

ADDRESSES: Communications Division, Office of the Comptroller of the Currency, Public Information Room, Mailstop 2–3, Attention: 1557–0182, 250 E Street, SW., Washington, DC 20219. In addition, comments may be sent by fax to (202) 874–4448, or by electronic mail to *regs.comments@occ.treas.gov.* You can inspect and photocopy the comments at the OCC's Public Information Room, 250 E Street, SW., Washington, DC 20219. You can make an appointment to inspect the comments by calling (202) 874–5043.

Additionally, you should send a copy of your comments to OCC Desk Officer, 1557–0182, by mail to U.S. Office of Management and Budget, 725 17th Street, NW., #10235, Washington, DC 20503, or by fax to (202) 395–6974.

FOR FURTHER INFORMATION CONTACT: You may request additional information or a copy of the collection and supporting documentation submitted to OMB by contacting: Mary H. Gottlieb, (202) 874–5090, Legislative and Regulatory Activities Division, Office of the Comptroller of the Currency, 250 E Street, SW., Washington, DC 20219.

SUPPLEMENTARY INFORMATION:

Title: Disclosure of Financial and Other Information by National Banks (12 CFR Part 18).

OMB Control No.: 1557–0182.

Type of Review: Extension, without revision, of a currently approved collection.

Description: The collections of information are found in 12 CFR 18.3, 18.4, and 18.8. Section 18.3 requires the preparation of an annual disclosure statement and specifies how it must be made available. Section 18.4 details the required elements of the disclosure statement and permits a bank to supplement its annual disclosure statement with an optional narrative. Lastly, section 18.8 requires that a national bank promptly furnish its annual disclosure statement upon request.

The regulation applies to approximately 1,535 national banks and 50 Federal branches and agencies. Most banks will use their Call Reports or information prepared for annual reports as their disclosure material.

This program of periodic financial disclosure is necessary, not only to facilitate informed decision making by existing and potential customers and investors, but also to improve public understanding of, and confidence in, the financial condition of individual national banks and the national banking system. Financial disclosure also reduces the likelihood that the market will overreact to incomplete information.

Affected Public: Businesses or other for-profit.

Burden Estimates:

Estimated Number of Respondents: 1,585.

Estimated Number of Responses: 1,585.

Estimated Annual Burden: 793 hours.

Frequency of Response: On occasion.

Comments: OCC issued a 60-Day **Federal Register** notice on March 18, 2010. 75 FR 13205. No comments were received. Comments continue to be solicited on:

(a) Whether the collection of information is necessary for the proper performance of the functions of the OCC, including whether the information has practical utility;

(b) The accuracy of the OCC's estimate of the information collection burden;

(c) Ways to enhance the quality, utility, and clarity of the information to be collected;

(d) Ways to minimize the burden of the collection on respondents, including through the use of automated collection techniques or other forms of information technology; and

(e) Estimates of capital or start-up costs and costs of operation, maintenance, and purchase of services to provide information.

Dated: May 27, 2010.

Michele Meyer

Assistant Director, Legislative and Regulatory Activities Division, Office of the Comptroller of the Currency.

[FR Doc. 2010–13251 Filed 6–3–10; 8:45 am]

BILLING CODE 4810–33–P

DEPARTMENT OF THE TREASURY

Office of the Comptroller of the Currency

Agency Information Collection Activities: Submission for OMB Review; Comment Request

AGENCY: Office of the Comptroller of the Currency (OCC), Treasury.

ACTION: Notice and request for comment.

SUMMARY: The OCC, as part of its continuing effort to reduce paperwork and respondent burden, invites the general public and other Federal agencies to comment on a continuing

information collection, as required by the Paperwork Reduction Act of 1995. An agency may not conduct or sponsor, and a respondent is not required to respond to, an information collection unless it displays a currently valid Office of Management and Budget (OMB) control number. The OCC is soliciting comment concerning an extension of OMB approval of the information collection titled, "Interagency Guidance on Asset Securitization Activities." The OCC is also giving notice that it has submitted the collection to OMB for review.

DATES: Comments must be submitted on or before July 6, 2010.

ADDRESSES: Communications Division, Office of the Comptroller of the Currency, Mailstop 2–3, Attention: 1557–0217, 250 E Street, SW., Washington, DC 20219. In addition, comments may be sent by fax to (202) 874–5274, or by electronic mail to *regs.comments@occ.treas.gov.* You may personally inspect and photocopy the comments at the OCC, 250 E Street, SW., Washington, DC 20219. For security reasons, the OCC requires that visitors make an appointment to inspect comments. You may do so by calling (202) 874–4700. Upon arrival, visitors will be required to present valid government-issued photo identification and to submit to security screening in order to inspect and photocopy comments.

Additionally, you should send a copy of your comments to OCC Desk Officer, 1557–0217, by mail to U.S. Office of Management and Budget, 725, 17th Street, NW., #10235, Washington, DC 20503, or by fax to (202) 395–6974.

FOR FURTHER INFORMATION CONTACT: You may request additional information or a copy of the collection and supporting documentation submitted to OMB by contacting: Mary H. Gottlieb, (202) 874–5090, Legislative and Regulatory Activities Division, Office of the Comptroller of the Currency, 250 E Street, SW., Washington, DC 20219.

SUPPLEMENTARY INFORMATION:

Title: Interagency Guidance on Asset Securitization Activities.

OMB Control No.: 1557–0217.

Type of Review: Extension, without revision, of a currently approved collection.

Description: This information collection applies to institutions engaged in asset securitization and consists of a written asset securitization policy, the documentation of fair value of retained interests, and a management information system to monitor securitization activities. Institution management uses the collection as the basis for the safe and sound operation of their asset securitization activities. The OCC uses the information to evaluate the quality of an institution's risk management practices. The OCC also uses the information to assist institutions lacking proper supervision of their asset securitization activities with the implementation of corrective action to ensure that the activities are conducted in a safe and sound manner.

Affected Public: Businesses or other for-profit.

Burden Estimates:

Estimated Number of Respondents: 33.

Estimated Number of Responses: 97.

Estimated Annual Burden: 478 hours.

Frequency of Response: On occasion.

Comments: The OCC issued a 60-day **Federal Register** notice on March 17, 2010 (75 FR 12812). No comments were received. Comments continue to be invited on:

(a) Whether the collection of information is necessary for the proper performance of the functions of the agency, including whether the information has practical utility;

(b) The accuracy of the agency's estimate of the burden of the collection of information;

(c) Ways to enhance the quality, utility, and clarity of the information to be collected;

(d) Ways to minimize the burden of the collection on respondents, including through the use of automated collection techniques or other forms of information technology; and

(e) Estimates of capital or start-up costs and costs of operation, maintenance, and purchase of services to provide information.

Dated: May 27, 2010.

Michele Meyer,

Assistant Director, Legislative and Regulatory Activities Division, Office of the Comptroller of the Currency.

[FR Doc. 2010–13247 Filed 6–3–10; 8:45 am]

BILLING CODE 4810–33–P

DEPARTMENT OF THE TREASURY

Office of the Comptroller of the Currency

Agency Information Collection Activities: Submission for OMB Review; Comment Request

AGENCY: Office of the Comptroller of the Currency (OCC), Treasury.

ACTION: Notice and request for comment.

SUMMARY: The OCC, as part of its continuing effort to reduce paperwork and respondent burden, invites the general public and other Federal agencies to comment on a continuing information collection, as required by the Paperwork Reduction Act of 1995. An agency may not conduct or sponsor, and a respondent is not required to respond to, an information collection unless it displays a currently valid Office of Management and Budget (OMB) control number. The OCC is soliciting comment concerning a continuing information collection titled, "Survey of Minority Owned National Banks." OCC also gives notice that it has sent the collection to OMB for review.

DATES: Comments must be submitted on or before July 6, 2010.

ADDRESSES: Communications Division, Office of the Comptroller of the Currency, Mailstop 2–3, Attention: 1557–0236, 250 E Street, SW., Washington, DC 20219. In addition, comments may be sent by fax to (202) 874–5274 or by electronic mail to *regs.comments@occ.treas.gov.* You may personally inspect and photocopy the comments at the OCC, 250 E Street, SW., Washington, DC 20219. For security reasons, the OCC requires that visitors make an appointment to inspect comments. You may do so by calling (202) 874–4700. Upon arrival, visitors will be required to present valid government-issued photo identification and to submit to security screening in order to inspect and photocopy comments.

Additionally, you should send a copy of your comments to OCC Desk Officer, 1557–0236, by mail to U.S. Office of Management and Budget, 725 17th Street, NW., #10235, Washington, DC 20503, or by fax to (202) 395–6974.

FOR FURTHER INFORMATION CONTACT: You may request additional information or a copy of the collection and supporting documentation submitted to OMB by contacting: Mary H. Gottlieb, (202) 874–5090, Legislative and Regulatory Activities Division, Office of the Comptroller of the Currency, 250 E Street, SW., Washington, DC 20219.

SUPPLEMENTARY INFORMATION:

Title: Survey of Minority Owned National Banks.

OMB Control No.: 1557–0236.

Type of Review: Regular review.

Description: The OCC is committed to assessing its efforts to provide supervisory support, technical assistance, education, and other outreach to the Minority Owned National Banks (MONBs) under its supervision. To perform this assessment, it is necessary to obtain, from the individual MONBs, feedback on the effectiveness of OCC's current efforts and suggestions for enhancing its

supervision and assistance going forward. The OCC will use the information it gathers to assess the needs of MONBs as well as its efforts to meet those needs. The OCC will also use the information to focus and enhance its supervisory, technical assistance, education and other outreach activities with respect to MONBs.

Affected Public: Businesses or other for-profit.

Burden Estimates:

Estimated Number of Respondents: 39.

Estimated Number of Responses: 39.

Estimated Annual Burden: 78 hours.

Frequency of Response: On occasion.

Comments: The OCC published a 60-Day **Federal Register** notice on March 17, 2010. 75 FR 12812. No comments were received. Comments continue to be invited on:

(a) Whether the collection of information is necessary for the proper performance of the functions of the OCC, including whether the information has practical utility;

(b) The accuracy of the OCC's estimate of the information collection burden;

(c) Ways to enhance the quality, utility, and clarity of the information to be collected;

(d) Ways to minimize the burden of the collection on respondents, including through the use of automated collection techniques or other forms of information technology; and

(e) Estimates of capital or start-up costs and costs of operation, maintenance, and purchase of services to provide information.

Dated: May 27, 2010.

Michele Meyer,

Assistant Director, Legislative and Regulatory Activities Division, Office of the Comptroller of the Currency.

[FR Doc. 2010–13249 Filed 6–3–10; 8:45 am]

BILLING CODE 4810–33–P

DEPARTMENT OF VETERANS AFFAIRS

Advisory Committee on Disability Compensation; Notice of Meeting

The Department of Veterans Affairs (VA) gives notice under Public Law 92–463 (Federal Advisory Committee Act) that the Advisory Committee on Disability Compensation will meet on June 21–22, 2010, at the St. Regis Washington, DC, 923 16th and K Streets, NW., from 8:30 a.m. to 5 p.m. each day. The meeting will be held in the Carlton Ballroom. The meeting is open to the public.

The purpose of the Committee is to advise the Secretary of Veterans Affairs on the maintenance and periodic readjustment of the VA Schedule for Rating Disabilities. The Committee is to assemble and review relevant information relating to the nature and character of disabilities arising from service in the Armed Forces, provide an ongoing assessment of the effectiveness of the rating schedule and give advice on the most appropriate means of responding to the needs of veterans relating to disability compensation.

On both days, the Committee will receive briefings on issues related to compensation for Veterans with service-connected disabilities and other Veteran benefits programs. Time will be allocated for receiving public comments on the afternoon of June 22. Public comments will be limited to three minutes each. Individuals wishing to make oral statements before the Committee will be accommodated on a first-come, first-served basis. Individuals who speak are invited to submit 1–2 page summaries of their comments at the time of the meeting for inclusion in the official meeting record.

The public may submit written statements for the Committee's review to Ms. Ersie Farber, Designated Federal Officer, Department of Veterans Affairs, Veterans Benefits Administration (211A), 810 Vermont Avenue, NW., Washington, DC 20420. Any member of the public wishing to attend the meeting or seeking additional information should contact Ms. Farber at (202) 461–9728 or *Ersie.farber@va.gov.*

Dated: May 28, 2010.

By Direction of the Secretary:

Vivian Drake,

Acting Committee Management Officer.

[FR Doc. 2010–13418 Filed 6–3–10; 8:45 am]

BILLING CODE P

Federal Register

Friday,
June 4, 2010

Part II

Environmental Protection Agency

40 CFR Part 241

Identification of Non-Hazardous Secondary Materials That Are Solid Waste; Proposed Rule

ENVIRONMENTAL PROTECTION AGENCY

40 CFR Part 241

[EPA–HQ–RCRA–2008–0329; FRL–9148–2]

RIN 2050–AG44

Identification of Non-Hazardous Secondary Materials That Are Solid Waste

AGENCY: Environmental Protection Agency (EPA).

ACTION: Proposed rule.

SUMMARY: On January 2, 2009, the Environmental Protection Agency (EPA or the Agency) issued an Advanced Notice of Proposed Rulemaking (ANPRM) to solicit comment on which non-hazardous secondary materials that are used as fuels or ingredients in combustion units are solid wastes under the Resource Conservation and Recovery Act (RCRA). The meaning of "solid waste" as defined under RCRA is of particular importance since it will determine whether a combustion unit is required to meet emissions standards for solid waste incineration units issued under section 129 of the Clean Air Act (CAA) or emissions standards for commercial, industrial, and institutional boilers issued under CAA section 112. CAA section 129 states that the term "solid waste" shall have the meaning "established by the Administrator pursuant to [RCRA]." EPA is proposing a definition of non-hazardous solid waste that would be used to identify whether non-hazardous secondary materials burned as fuels or used as ingredients in combustion units are solid waste. EPA is also proposing that non-hazardous secondary materials that have been discarded, and are therefore solid wastes, may be rendered products after they have been processed (altered chemically or physically) into a fuel or ingredient product. This proposed rule is necessary to identify units for the purpose of developing certain standards under sections 112 and 129 of the CAA. In addition to this proposed rule, EPA is concurrently proposing air emission requirements under CAA section 112 for industrial, commercial, and institutional boilers and process heaters, as well as air emission requirements under CAA section 129 for commercial and industrial solid waste incineration units.

DATES: *Comments.* Comments must be received on or before July 19, 2010. Under the Paperwork Reduction Act, comments on the information collection provisions are best assured of having full effect if the Office of Management and Budget (OMB) receives a copy of your comments on or before July 6, 2010.

Public Hearing. We will hold a public hearing concerning this proposed rule and the interrelated proposed CAA rules, discussed in this proposal and published in the proposed rules section of today's **Federal Register**, on June 21, 2010. Persons requesting to speak at a public hearing must contact EPA by June 14, 2010.

ADDRESSES: Submit your comments, identified by Docket ID No. EPA–HQ–RCRA–2008–0329, by one of the following methods:

- *http://www.regulations.gov:* Follow the on-line instructions for submitting comments.
- *E-mail:* Comments may be sent by electronic mail (e-mail) to: *rcra-docket@epa.gov*, Attention Docket ID No. EPA–HQ–RCRA–2008–0329. In contrast to EPA's electronic public docket, EPA's e-mail system is not an "anonymous access" system. If you send an e-mail comment directly to the docket without going through EPA's electronic public docket, EPA's e-mail system automatically captures your e-mail address. E-mail addresses that are automatically captured by EPA's e-mail system are included as part of the comment that is placed in the official public docket, and made available in EPA's electronic public docket.
- *Fax:* Comments may be faxed to 202–566–9744, Attention Docket ID No. EPA–HQ–RCRA–2008–0329.
- *Mail:* Proposed Rulemaking—Identification of Non-Hazardous Secondary Materials That Are Solid Waste, Environmental Protection Agency, Mailcode: 28221T, 1200 Pennsylvania Ave., NW., Washington, DC 20460. Please include a total of 2 copies. In addition, please mail a copy of your comments on the information collection provisions to the Office of Information and Regulatory Affairs, Office of Management and Budget (OMB), *Attn:* Desk Officer for EPA, 725 17th St., NW., Washington, DC 20503.
- *Hand Delivery:* Deliver two copies of your comments to Proposed Rulemaking—Identification of Non-Hazardous Secondary Materials That Are Solid Waste, EPA/DC, EPA West, Room 3334, 1301 Constitution Ave., NW., Washington, DC 20460. Attention Docket ID No. EPA–HQ–RCRA–2008–0329. Such deliveries are only accepted during the Docket's normal hours of operation and special arrangements should be made for deliveries of boxed information.

Instructions: Direct your comments to Docket ID No. EPA–HQ–RCRA–2008–0329. EPA's policy is that all comments received will be included in the public docket without change and may be made available online at *http://www.regulations.gov,* including any personal information provided, unless the comment includes information claimed to be Confidential Business Information (CBI) or other information whose disclosure is restricted by statute. Do not submit information that you consider to be CBI or otherwise protected through *http://www.regulations.gov* or e-mail. The *http://www.regulations.gov* Web site is an "anonymous access" system, which means EPA will not know your identity or contact information unless you provide it in the body of your comment. If you send an e-mail comment directly to EPA without going through *http://www.regulations.gov*, your e-mail address will be automatically captured and included as part of the comment that is placed in the public docket and made available on the Internet. If you submit an electronic comment, EPA recommends that you include your name and other contact information in the body of your comment and with any disk or CD–ROM you submit. If EPA cannot read your comment due to technical difficulties and cannot contact you for clarification, EPA may not be able to consider your comment. Electronic files should avoid the use of special characters, any form of encryption, and be free of any defects or viruses. For additional information about EPA's public docket, visit the EPA Docket Center homepage at *http://www.epa.gov/epahome/dockets.htm.* For additional instructions on submitting comments, go to the **SUPPLEMENTARY INFORMATION** section of this document. We also request that interested parties who would like information they previously submitted to EPA to be considered as part of this action, to identify the relevant information by docket entry numbers and page numbers.

Public Hearing: We will hold a public hearing concerning the proposed rule on June 21, 2010. Persons interested in presenting oral testimony at the hearing should contact Ms. Odessa Bowling, Program Implementation and Information Division, Office of Resource Conservation and Recovery, at (703) 308–8404 by June 14, 2010. The public hearing will be held in the Washington DC area at a location and time that will be posted at the following Web site: *http://www.epa.gov/osw/nonhaz/definition.htm.* Please refer to this Web site to confirm the date of the public hearing as well. If no one requests to

speak at the public hearing by June 14, 2010 then the public hearing will be cancelled and a notification of cancellation posted on the following web site: *http://www.epa.gov/osw/nonhaz/definition.htm.* Information regarding the interrelated CAA proposals referenced can be found at *http://www.epa.gov/airquality/combustion.*

Docket: All documents in the docket are listed in the *http://www.regulations.gov* index. Although listed in the index, some information is not publicly available, *e.g.*, CBI or other information whose disclosure is restricted by statute. Certain other material, such as copyrighted material, will be publicly available only in hard copy. Publicly available docket materials are available either electronically in *http://www.regulations.gov* or in hard copy at the RCRA Docket, EPA/DC, EPA West, Room 3334, 1301 Constitution Ave., NW., Washington, DC. The Public Reading Room is open from 8:30 a.m. to 4:30 p.m., Monday through Friday, excluding legal holidays. The telephone number for the Public Reading Room is (202) 566–1744, and the telephone number for the RCRA Docket is (202) 566–0270.

FOR FURTHER INFORMATION CONTACT: George Faison, Program Implementation and Information Division, Office of Resource Conservation and Recovery, 5303P, Environmental Protection Agency, Ariel Rios Building, 1200 Pennsylvania Avenue, NW., Washington, DC 20460–0002; *telephone number:* 703–305–7652; *fax number:* 703–308–0509; *e-mail address: faison.george@epa.gov.*

SUPPLEMENTARY INFORMATION:

A. Does This Action Apply to Me?

Categories and entities potentially affected by this action include:

Generators		Users	
Major generator category	NAICS*	Major boiler type and primary industry category	NAICS*
Iron and Steel Mills	331111	*Industrial Boilers:*	
		Food Manufacturing	311, 312
		Pulp and Paper Mills	3221
		Chemical Manufacturing	325
Other Rubber Product Manufacturing.	32629	Petroleum Refining	32411
		Primary Metal Manufacturing	331
		Fabricated Metal Manufacturing	332
Logging	113310	Other Manufacturing	313, 339, 321, 333, 336, 511, 326, 316, 327
Sawmills and Wood Preservation	32111.		
Veneer, Plywood, and Engineered Wood Product Manufacturing.	32121	*Commercial Boilers:*	
Pulp, Paper, and Paperboard Mills	3221	Office	813, 541, 921
Cattle Ranching and Farming	1121	Warehouse	493
Hog and Pig Farming	1122	Retail	442–454
Poultry and Egg Production	1123	Education	611
Sheep and Goat Farming	1124	Social Assistance	624
Horses and Other Equine Production.	112920	Lodging, Restaurant	721, 722
Crop Production	111	Health Care Facilities	621
Support Activities for Crop Production.	11511	Other	922140, others
Food Manufacturing	311.		
Beverage and Tobacco Product Manufacturing.	312	*Common Non-Manufacturing Boilers:*	
Construction of Buildings	236	Agriculture (crop & livestock production).	111, 112, 115
Site Preparation Contractors	238910	All Mining	212
Landscaping Services	561730	Construction	236
Iron and Steel Mills	331111.		
Fossil Fuel Electric Power Generation.	221112	*Other Boilers:*	
Cement Manufacturing	327310	Electric Utility Boilers	2211
Bituminous Coal and Lignite Surface Mining.	212111.		
Bituminous Coal Underground Mining.	212112	Non HW Burning Cement Kilns	327310
Anthracite Mining	212113.		
Sewage Treatment Facilities	221320.		
Solid Waste Collection and Solid Waste Landfill.	562111, 562212.		
Metal-casting industry	331522.		
Glass and Glass Product Manufacturing.	3272.		

Generators		Users	
Major generator category	NAICS*	Major boiler type and primary industry category	NAICS*
Packaging	32611.		
Plastic manufacturers	325211.		
Electrometallurgical Ferroalloy Product Manufacturing.	331112.		
Recycling Services for Degreasing Solvents Manufacturing.	325998.		
Solvent Dyes Manufacturing	325132.		
Solvents Made in Petroleum Refineries.	324110.		
Automotive Repair and Replacement Shops.	811111.		
Recyclable Material Wholesalers	423930.		
Engineered Wood Members Manufacturing.	321213.		
All Other Miscellaneous Chemical Product and Preparation Manufacturing.	325998.		

* NAICS = North American Industrial Classification System.

This table is not intended to be exhaustive, but rather provides a guide for readers regarding entities likely to be impacted by this action. This table lists examples of the types of entities of which EPA is aware that could potentially be affected by this action. Other types of entities not listed could also be affected. To determine whether your facility, company, business, organization, etc., is affected by this action, you should examine the applicability criteria in this rule. If you have any questions regarding the applicability of this action to a particular entity, consult the person listed in the preceding section: **FOR FURTHER INFORMATION CONTACT**.

B. What Should I Consider as I Prepare My Comments for EPA?

1. *Submitting CBI.* Do not submit this information to EPA through *http://www.regulations.gov* or e-mail. Clearly mark the part or all of the information that you claim to be CBI. For CBI information in a disk or CD ROM that you mail to EPA, mark the outside of the disk or CD ROM as CBI and then identify electronically within the disk or CD ROM the specific information that is claimed as CBI. In addition to one complete version of the comment that includes information claimed as CBI, a copy of the comment that does not contain the information claimed as CBI must be submitted for inclusion in the public docket. Information so marked will not be disclosed except in accordance with the procedures set forth in 40 CFR part 2.

2. *Tips for Preparing Your Comments.* When submitting comments, remember to:

- Identify the rulemaking by docket number and other identifying information (subject heading, **Federal Register** date, and page number).
- Follow directions—The agency may ask you to respond to specific questions or organize comments by referencing a Code of Federal Regulations (CFR) part or section number.
- Explain why you agree or disagree, suggest alternatives, and substitute language for your requested changes.
- Describe any assumptions and provide any technical information and/or data that you used.
- If you estimate potential costs or burdens, explain how you arrived at your estimate in sufficient detail to allow for it to be reproduced.
- Provide specific examples to illustrate your concerns, and suggest alternatives.
- Explain your views as clearly as possible.
- Make sure to submit your comments by the comment period deadline identified.

3. *Docket Copying Costs.* Many documents are available only in the original and, therefore, must be photocopied. Patrons are allowed 100 free photocopies. Thereafter, they are charged 15 cents per page. When necessary, an invoice indicating how many copies were made, the cost of the order, and where to send a check will be issued to the patron.

Documents also are available on microfilm. The EPA/DC staff assist patrons locate the needed documents and operate the microfilm machines. The billing fee for printing microfilm documents is the same as for photocopying documents.

Patrons who are outside of the metropolitan Washington, DC, area can request documents by telephone. The photocopying and microfilming fee is the same as for walk-in patrons. If an invoice is necessary, EPA/DC staff can mail one with the order.

Preamble Outline

I. Statutory Authority
II. List of Abbreviations and Acronyms
III. Introduction
IV. Background
A. What Is the History of CISWI, CISWI Definitions, and Boiler Rulemakings?
B. Why Is the Court's Decision Affecting the CAA Rules Relevant to RCRA?
C. What Do Sections 112 and 129 of the CAA Require?
V. Use of Secondary Materials
A. Introduction
B. Secondary Materials Use and Benefits
VI. History of the Definition of Solid Waste
A. Statutory Definition of Solid Waste
B. Case Law on Definition of Solid Waste
C. The Concept of Legitimacy
VII. ANPRM Discussion, Summary of the Proposed Approach, Comments Received on the ANPRM, and Rationale for and Detailed Description of the Proposed Rule
A. Summary of the ANPRM Approach
1. Traditional Fuels
2. Guiding Principles Used To Determine if Secondary Materials Used in Combustion Units Are Solid Wastes
3. Secondary Materials Used as Legitimate "Alternative" Fuels That Have Not Been Previously Discarded
4. Secondary Materials Used as Legitimate "Alternative" Fuels Resulting From the Processing of Discarded Secondary Materials
5. Secondary Materials Used as Legitimate Ingredients
6. Hazardous Secondary Materials That May Be Excluded From the Definition of Solid Waste Under RCRA Subtitle C Because They Are More Like Commodities Than Wastes
7. Additional Areas for Comment in the ANPRM

a. Fuels or Materials That Have Been Discarded That Are Generally Considered To Be Solid Wastes
b. Other Approaches for Determining Whether Secondary Materials Are Fuels and Not Solid Wastes
c. Materials for Which State Beneficial Use Determinations Have Been Made
d. Biofuels
B. Summary of the Proposed Approach
1. Changes From the ANPRM Approach
2. General Proposed Approach
3. Legitimacy Criteria
4. Traditional Fuels
5. Circumstances Under Which a Non-Hazardous Secondary Material Would Not Be Considered a Solid Waste
6. Petition Process
C. What Were the Major Comments on the ANPRM?
1. Comments From State Agencies
2. Meaning of Discard
3. General Approach
4. Level of Processing Needed to Produce a Non-Waste Product From Discarded Waste Material
5. Comments on Specific Materials Used as Fuels
a. Traditional Fuels
b. Biomass
c. Used Tires
d. Used Oil
e. Coal Refuse/Coal Combustion Residuals
f. Sewage Sludge
6. Comments on Specific Materials Used as Ingredients
a. Cement Kiln Dust
b. Coal Combustion Residuals
c. Foundry Sand
d. Blast Furnace Slag/Steel Slag
7. Legitimacy Criteria
a. General
b. Fuels or Ingredients Being Managed as Valuable Commodities
c. Fuels Must Have Meaningful Heating Value
d. Fuel/Ingredient Contaminant Levels
e. Ingredients Must Provide Useful Contribution
f. Ingredients Must Produce a Valuable Product
8. De Minimis Concept
D. Rationale for, and Detailed Description of, Proposed Approach
1. Non-Hazardous Secondary Materials Used as Fuel Within the Control of the Generator
a. Scope and Applicability
b. Restrictions and Requirements
2. Non-Hazardous Secondary Materials Used as Fuel Outside the Control of the Generator
3. Non-Hazardous Secondary Materials Used as Ingredients in Combustion Units
4. Non-Hazardous Secondary Materials Processed Into Non-Waste Fuel/Ingredient Products
a. Proposed Definition of Processing
b. Rationale for Processing Discarded Material Into Non-Waste Product
c. Examples of Adequate Processing
d. Examples of Minimal Processing That Would Not Meet Proposed Definition of Processing
e. Alternative Approach for Addressing Non-Hazardous Secondary Materials That Are Processed Into Non-Waste Fuels or Ingredients
5. Non-Waste Determination Process
6. Legitimacy Criteria
a. Legitimacy Criteria for Fuels
b. Legitimacy Criteria for Ingredients
E. Alternative Approach
F. Effect of Today's Proposal on Other Programs
1. Clean Air Act
2. Renewable Energy
3. Subtitle C Hazardous Waste Program
VIII. State Authority
A. Applicability of State Solid Waste Definitions and Beneficial Use Determinations
B. State Adoption of the Rulemaking
IX. Cost and Benefits of the Proposed Rule
X. Statutory and Executive Order Reviews
A. Executive Order 12866: Regulatory Planning and Review
B. Paperwork Reduction Act
C. Regulatory Flexibility Act
D. Unfunded Mandates Reform Act
E. Executive Order 13132: Federalism
F. Executive Order 13175: Consultation and Coordination With Indian Tribal Governments
G. Executive Order 13045: Protection of Children From Environmental Health and Safety Risks
H. Executive Order 13211: Actions That Significantly Affect Energy Supply, Distribution or Usage
I. National Technology Transfer Advancement Act
J. Executive Order 12898: Federal Actions To Address Environmental Justice in Minority Populations and Low-Income Populations

I. Statutory Authority

The U.S. Environmental Protection Agency (EPA) is promulgating these regulations under the authority of sections 2002(a)(1) and 1004(27) of the Resource Conservation and Recovery Act (RCRA), as amended, 42 U.S.C. 6912(a)(1) and 6903(27). Section 129(a)(1)(D) of the CAA directs EPA to establish standards for Commercial and Industrial Solid Waste Incinerators (CISWI), which burn solid waste (section 129(g)(6) of the Clean Air Act (CAA), 42 U.S.C. 7429). Section 129(g)(6) provides that the term, solid waste, is to be established by EPA under RCRA. Section 2002(a)(1) of RCRA authorizes the Agency to promulgate regulations as are necessary to carry out its functions under the Act. The statutory definition of "solid waste" is provided in RCRA section 1004(27).

II. List of Abbreviations and Acronyms

ANPRM Advanced Notice of Proposed Rulemaking
ASME American Society of Mechanical Engineers
Btu British Thermal Unit
CAA Clean Air Act
CAFO Concentrated Animal Feeding Operations
CCA Chromated Copper Arsenate
CCR Coal Combustion Residuals
CFR Code of Federal Regulations
CISWI Commercial and Industrial Solid Waste Incinerator
CKD Cement Kiln Dust
CWA Clean Water Act
DSE Domestic Sewage Exemption
DSW Definition of Solid Waste
EG Emission Guidelines
EGU Electric Utility Steam Generating Unit
EPA U.S. Environmental Protection Agency
GACT Generally Available Control Technology
GHG Greenhouse Gas
HAP Hazardous Air Pollutant
IWI Institutional Waste Incinerator
LCA Life Cycle Analysis
MACT Maximum Achievable Control Technology
NESHAP National Emission Standards for Hazardous Air Pollutants
NSPS New Source Performance Standards
OSWI Other Solid Waste Incinerator
PC Portland Cement
PIC Product of Incomplete Combustion
POTW Publicly Owned Treatment Works
PVC Polyvinyl Chloride
RCRA Resource Conservation and Recovery Act
SWDA Solid Waste Disposal Act
TDF Tire Derived Fuel
VSMWC Very Small Municipal Waste Combustor

III. Introduction

In 1990, Congress added section 129 to the CAA to address emissions from solid waste incinerators. CAA section 129 directs EPA to promulgate emission standards for categories of "solid waste incineration units." 42 U.S.C. 7429(a)(1). The term "solid waste incineration unit" is defined, in pertinent part, to mean "a distinct operating unit of any facility which combusts any solid waste material from commercial or industrial establishments * * *" *Id.* at § 7429(g)(1). The CAA specifically excludes the following types of units from the definition of "solid waste incineration unit": (1) Incinerators or other units required to have a permit under section 3005 of RCRA; (2) material recovery facilities (including primary and secondary smelters) which combust waste for the primary purpose of recovering metals; (3) qualifying small power production facilities, as defined in section 3(17)(C) of the Federal Power Act, or qualifying cogeneration facilities, as defined in section 3(18)(B) of the Federal Power Act, which burn homogeneous waste (such as units which burn tires or used oil, but not including refuse-derived fuel) for the production of electric energy or in the case of qualifying cogeneration facilities which burn homogeneous waste for the production of electric energy or steam or forms of useful energy (such as heat) which are used for industrial, commercial, heating

or cooling purposes, or (4) air curtain incinerators, provided that such incinerators only burn wood wastes, yard wastes and clean lumber and that such air curtain incinerators comply with the opacity limitations to be established by the Administrator by rule. *Id.*

CAA section 129 further states that the term "solid waste" shall have the meaning "established by the Administrator pursuant to the Solid Waste Disposal Act" *Id.* at 7429(g)(6). CAA section 129 refers to the Solid Waste Disposal Act (SWDA). However, this act, as amended, is commonly referred to as RCRA. Thus, the term "RCRA" is used in place of SWDA in this Notice. RCRA in turn defines the term "solid waste" to mean "* * * any garbage, refuse, sludge from a waste treatment plant, water supply treatment plant, or air pollution control facility and other discarded material, including solid, liquid, semisolid, or contained gaseous material resulting from industrial, commercial, mining, and agricultural operations, and from community activities, * * *" Section 1004 (27).

IV. Background

The discussion below was previously included in the Advanced Notice of Proposed Rulemaking (ANPRM). However, because it is also pertinent to the development of today's proposal, it also is included here for the benefit of the reader. The entire record for the ANPRM is included in the record for this rulemaking. To the extent there are any inconsistencies or differences between the ANPRM and this proposal, the statements in this proposal apply.

A. What is the history of CISWI, CISWI definitions, and boiler rulemakings?

EPA promulgated a final rule setting forth performance emissions standards for Commercial and Industrial Solid Waste Incineration Units (referred to as the "CISWI Rule"). 65 FR 75338 (December 1, 2000). Under CAA section 129, the emissions standards for new sources must be at least as stringent as the emissions control achieved in practice by the best-controlled similar source. For existing sources, the emissions standards must be at least as stringent as the average emissions limitation achieved by the best-performing 12 percent of units in the category. CAA section 129 (a)(2). This level of stringency is commonly referred to as the maximum achievable control technology (MACT) "floor." EPA must also consider more stringent "beyond-the-floor" emissions controls, taking into account cost, energy, and non-air quality environmental impacts. The Administrator may also distinguish among classes, types (including mass-burn, refuse-derived fuel, modular and other types of units), and sizes of units within a category in establishing such standards. *Id.* at 7429(a)(2).

The CISWI Rule established emission limitations for new and existing CISWI units for the following pollutants: Cadmium, carbon monoxide, dioxins/furans, hydrogen chloride, lead, mercury, oxides of nitrogen (NO_X), particulate matter (PM), sulfur dioxide (SO_2), and opacity. In addition, the rule established certain monitoring and operator training and certification requirements. *See* 65 FR 75338 for a more detailed discussion of the CISWI Rule.

The CISWI Rule was challenged in *Sierra Club* v. *EPA* (No. 01–1048) (DC Cir.). After promulgation of the CISWI Rule, the DC Circuit issued its decision in a challenge to EPA's MACT standards for the cement kiln industry. *Cement Kiln Recycling Coalition* v. *EPA,* 255 F.3d 855 (DC Cir. 2001) ("Cement Kiln"). As a result of the courts decision in *Cement Kiln,* EPA requested a voluntary remand of the CISWI Rule, in order to address concerns related to the issues that were raised by the court in *Cement Kiln.* The court granted EPA's request for a voluntary remand and remanded, without vacatur, the CISWI Rule back to EPA. Because the CISWI Rule was not vacated, its requirements remain in effect. *See Sierra Club.* v. *EPA,* 374 F. Supp.2d 30, 32–33 (D.D.C. 2005).

On September 22, 2005, EPA issued revised definitions of "solid waste," "commercial or industrial solid waste incineration unit," and "commercial or industrial waste" (the "CISWI Definitions Rule"). *See* 70 FR 55568. In the CISWI Definitions Rule, EPA defined "commercial and industrial solid waste" to exclude solid waste that is combusted at a facility in a combustion unit whose design provides for energy recovery or which operates with energy recovery. Therefore, a unit combusting solid waste with energy recovery was not considered a CISWI unit.

The CISWI Definitions Rule was vacated by the DC Circuit in *NRDC* v. *EPA (*489 F.3d 1250 (DC Cir. 2007)). The court stated that the statute unambiguously requires any unit that combusts "any solid waste material at all"—regardless of whether the material is being burned for energy recovery—to be regulated as a "solid waste incineration unit." *Id.* at 1260. In the same decision, the court also vacated and remanded EPA's emissions standards for commercial, industrial, and institutional major source boilers and process heaters (the Boiler MACT Rule), concluding that the universe of sources subject to that rule would be much smaller if it did not include units that combust solid waste for the purposes of energy recovery.

B. Why is the court's decision affecting the CAA rules relevant to RCRA?

In responding to the court's vacatur and remand of the CISWI Definitions Rule and the Boiler MACT Rule, EPA is establishing, under RCRA, which non-hazardous secondary materials [1] are "solid waste." This is necessary because, under the court's decision, any unit combusting any "solid waste" at all must be regulated as a "solid waste incineration unit," regardless of the function of the combustion device. If a non-hazardous secondary material (also referred to as secondary materials in this notice) is not a "solid waste" under RCRA, then a unit combusting that material must be regulated pursuant to CAA section 112 if it is a source of HAP. Alternatively, if such material is a "solid waste" under RCRA, then a unit combusting that material must be regulated under CAA section 129.

C. What do CAA Sections 112 and 129 require?

CAA section 112 requires EPA to promulgate regulations to control emissions of 187 [2] hazardous air pollutants (HAP) from sources in each source category listed by EPA under section 112(c). The statute requires the regulations for major sources [3] to reflect the maximum degree of reduction in emissions of HAP that is achievable taking into consideration the cost of achieving the emission reduction, any non-air quality health and environmental impacts, and energy requirements. For existing sources, the emissions standards must be at least as stringent as the average emissions limitation achieved by the best-

[1] A secondary material is any material that is not the primary product of a manufacturing or commercial process, and can include post-consumer material, post-industrial material, and scrap. Many types of secondary materials have Btu or material value, and can be reclaimed or reused in industrial processes. For purposes of this notice, the term secondary materials include only non-hazardous secondary materials. *See also American Mining Congress* v. *EPA,* 824 F.2d 1177 (DC Cir. 1987) in which the U.S. Court of Appeals for the District of Columbia Circuit discussed secondary materials.

[2] EPA has delisted 3 of the 190 HAP initially listed in section 112(b)(1): Methyl ethyl ketone, glycol ethers, and caprolactam.

[3] A "major source" is any stationary source that emits or has the potential to emit considering controls, in the aggregate, 10 tons per year or more of any HAP or 25 tons per year or more of any combination of HAP. CAA section 112(a)(1).

performing 12 percent of units in the category or subcategory for categories and subcategories with at least 30 sources, and by the best-performing five sources in the category or subcategory for categories and subcategories with fewer than 30 sources. For new sources, the emissions standard must be at least as stringent as the emissions limitation achieved by the best-performing similar source. CAA section 112(d)(3). This level of stringency is commonly referred to as the MACT "floor."

Like the CAA section 112 standards, the CAA section 129 standards are based on a MACT floor. Also, as with the section 112 standards, above-the-floor standards may be established where EPA determines it is "achievable" taking into account costs and other factors. Although CAA section 129 "establishes emission requirements virtually identical to section [112's]," *Nat'l Lime Ass'n* v. *EPA,* 233 F.3d at 631, the two sections differ in three primary respects. First, CAA section 112 requires that MACT standards be established for major sources of HAP emissions, but provides discretionary authority to establish standards based on "generally available control technology" (GACT) for area sources of HAP emissions.[4] On the other hand, under CAA section 129, EPA must issue MACT standards for all solid waste incineration units in a given category regardless of size. Second, CAA section 129 requires that numeric emission limitations must be established for the following nine pollutants, plus opacity (as appropriate): cadmium, carbon monoxide, dioxins/furans, hydrogen chloride, lead, mercury, NOx, particulate matter (total and fine), and SO_2.[5] These nine pollutants represent the minimum that must be regulated; EPA has the discretion to establish standards for other pollutants as well. Third, CAA section 129 includes specific requirements for operator training, pre-construction site assessments, and monitoring that are not included in CAA section 112. *See* CAA section 129(a)(3), (c) and (d).

Rather, CAA section 112's implicit authority and CAA sections 113 and 114's explicit authority is relied upon to include provisions as necessary to assure compliance with and enforcement of the section 112 emission limitations. It is important to note that CAA section 129(h)(2) specifies that no solid waste incineration unit subject to the performance standards under CAA sections 111 and 129 shall be subject to the standards under CAA section 112(d).

V. Use of Secondary Materials

A. Introduction

The U.S. is pursuing an approach to materials management that employs the concepts of life cycle assessment[6] and full cost accounting.[7] Within the context of RCRA,[8] this proposal aims to facilitate materials management to the extent allowed by the statute, through the establishment of a regulatory framework that guides the beneficial use of various secondary materials, while ensuring that such use is protective of human health and the environment. EPA, in conjunction with the states, seeks to further facilitate this objective through research, analysis, incentives, and communication. The Agency recognizes that secondary materials are widely used today as raw materials, as products, and as fuels and/or ingredients in industrial processes. We expect these uses will continue and expand in future years as effective materials management becomes more critical to a sustainable society. The use of materials from a variety of non-traditional sources, including the use of energy-containing secondary materials, is expected to play an important role in future resource conservation efforts.

The use of secondary materials as alternative fuels and/or ingredients in manufacturing processes using combustion not only recovers valuable resources, it is known to contribute to emission reductions. For example, both greenhouse gas (GHG) and particulate matter (PM) emissions have been reduced as a co-benefit of the use of secondary materials.[9] The use of secondary materials, such as use as a fuel in industrial processes may also result in other benefits. These may include reduced fuel imports, reducing negative environmental impacts caused by previous dumping (*e.g.,* tires), and reduced methane gas generation from landfills.

Secondary materials may, in most cases, be more appropriately defined as "by-products,"[10] reflecting their inherent resource recovery value in the generation and production of heat, energy, and/or marketable products. These secondary materials can provide micro (firm level) and macroeconomic benefits when legitimately used as an effective substitute for, or supplement to primary materials. Economic efficiency can be improved with the use of secondary materials, when substituted for increasingly scarce primary materials, because the use of such materials often results in an equivalent level of output at lower overall resource use, or in turn, more output could be generated using the same amount of resource inputs. When this occurs, monetary savings resulting from reduced resources would, theoretically, be applied to a higher and better use in the economy. This helps advance economic growth as a result of improved industrial efficiency,[11] which, in turn, helps move the country toward material sustainability and energy self sufficiency, while protecting human health and the environment.

B. Secondary Materials Use and Benefits

A wide and diverse range of secondary materials are currently used as fuels and/or ingredients in

[4] An "area source" is any stationary source of HAP that is not a major source. CAA section 112(a)(2). Area sources may be regulated under CAA section 112(d)(2) standards if the Administrator finds that the sources "presen[t] a threat of adverse effects to human health or the environment (by such sources individually or in the aggregate) warranting regulation under this section." Section 112(c)(3). Certain categories of area sources must be regulated in accordance with section 112(c)(3) and (k)(3)(B).

[5] Of these nine pollutants, cadmium, dioxins/furans, hydrogen chloride, lead, and mercury are also regulated HAP pursuant to CAA section 112, and particulate matter and carbon monoxide are commonly used as surrogate emission standards to control specific CAA section 112 HAP (*e.g.,* CAA section 112 HAP metal and organic emissions).

[6] The terms "life cycle analysis" and "life cycle assessment" are commonly used interchangeably. Life cycle assessment is a system-wide analytical technique for assessing the environmental (and sometimes economic) effects of a product, process, or activity across all life stages.

[7] Full cost accounting is an accounting system that incorporates economic, environmental, health, and social costs of a product, action, or decision.

[8] RCRA Section 6901(c)—Materials: The Congress finds with respect to materials, that—(1) Millions of tons of recoverable material which could be used are needlessly buried each year; (2) methods are available to separate usable materials from solid waste; and (3) the recovery and conservation of such materials can reduce the dependence of the United States on foreign resources and reduce the deficit in its balance of payments.

[9] For example, the GHG rate associated with the combustion of scrap tires is approximately 0.081 $MTCO_2E$ per MMBtu of scrap tires combusted, while the GHG emissions rate for coal is approximately 0.094 $MTCO_2E$ per MMBtu. Combined with the avoided extraction and processing emissions 0.006 $MTCO_2E$/MMBtu for coal, the total avoided GHG is 0.019 $MTCO_2E$ per MMBtu. Substituting tire-derived fuel for coal would also avoid an estimated 0.246 Lbs/MMBtu of PM associated with extraction and processing of the coal. Please see the Materials Characterization Papers in the docket for further details on these estimates, and other estimates of avoided emissions associated with burning tires and other secondary materials as fuel.

[10] For purposes of this action, we define by-product as a secondary or incidental material derived from the primary use or production process that has value in the marketplace, or value to the user.

[11] Opportunities for improved economic efficiency are recognized through the Action Statement of the *U.S. Business Council For Sustainable Development:* "Promoting Sustainable Development by Creating Value Through Action Establishing Networks and Partnerships, and Providing a Voice for Industry."

manufacturing or service processes. Based on our research conducted in support of the January 2, 2009 ANPRM, we identified eight non-hazardous secondary material fuels or fuel groups and six non-hazardous ingredients, or ingredient groups. The eight fuel source materials were: The biomass group (pulp and paper residuals, forest derived biomass, agricultural residues, food scraps, animal manure, and gaseous fuels); construction and demolition materials (building related, disaster debris, and land clearing debris); scrap tires; scrap plastics; spent solvents; coal refuse; waste water treatment sludge, and used oil. The six secondary material ingredients were: blast furnace slag; cement kiln dust (CKD); the coal combustion product group (fly ash, bottom ash, and boiler slag); foundry sand; silica fume; and secondary glass material. The ANPRM discussed and described these key secondary materials. In addition, we developed comprehensive Materials Characterization Papers for each of these fuel and ingredient materials. These papers were included in the docket for the ANPRM, which as we note above is incorporated into the docket for this proposed rule.

Based on our review of the public comments submitted in response to the ANPRM, plus further research, we have identified three additional secondary materials not addressed in the ANPRM. These additional secondary materials are auto shredder residue, purification process byproducts, and resinated wood products. We have prepared Materials Characterization Papers for these newly identified secondary materials, which are also included in the docket for today's proposed rule. In addition, we have updated and revised nearly all [12] of the existing Materials Characterization Papers to incorporate commenter information, as appropriate, plus relevant information derived from the 2008 combustion survey database (OMB Control Number 2060–0616). We believe that our newly defined list of secondary fuels and ingredients accounts for the vast majority of all secondary materials used in combustion processes in the U.S. However, as part of this proposal, we again solicit comment on these and any other non-hazardous secondary materials potentially used as fuels and/or ingredients. Comments containing detailed, quality controlled data are welcome and will be very useful as we move forward in this rulemaking effort. Information on the annual quantity of material generated, used, and stored; major uses (*i.e.,* fuel v. non-fuel); management practices; major markets; processing requirements; contaminants; and life cycle inventory data would be most helpful.

[12] The materials characterization paper on Silica Fume was the only paper not requiring updating.

VI. History of the Definition of Solid Waste

A. Statutory Definition of Solid Waste

RCRA defines "solid waste" as "* * *any garbage, refuse, sludge from a waste treatment plant, water supply treatment plant, or air pollution control facility and *other discarded material* * * * resulting from industrial, commercial, mining, and agricultural operations, and from community activities * * *" (RCRA section 1004 (27) (emphasis added)). The key concept is that of "discard" and, in fact, this definition turns on the meaning of the phrase, "other discarded material," since this term encompasses all other examples provided in the definition.

The ANPRM provides a complete discussion on the concept of discard, as well as a description of the solid waste program under RCRA subtitle D, and the hazardous waste program under RCRA subtitle C. We refer the reader to the ANPRM for a detailed discussion on these subjects regarding the definition of solid waste. The ANPRM also includes a detailed discussion on the case law on the definition of solid waste, which we repeat below, and on the concept of legitimacy, or legitimate recycling. That discussion is relevant to this proposal and is incorporated into this rulemaking. We are repeating parts of the discussion on legitimacy below to the extent it helps in understanding this proposal.

B. Case Law on Definition of Solid Waste

Partly because the interpretation of the definition of solid waste is the foundation of the hazardous waste regulatory program, there has been a great deal of litigation over the meaning of "solid waste" under RCRA subtitle C. From these cases, a few key principles emerge which guide our thinking on the definition of solid waste.

First, the ordinary plain-English meaning of the term, "discard" controls when determining whether a material is a solid waste. *See American Mining Congress* v. *EPA,* 824 F.2d 1177 (DC Cir. 1987) ("AMC I"). The ordinary plain-English meaning of the term discarded means "disposed of," "thrown away," or "abandoned." The DC Circuit in AMC I specifically rejected a more expansive meaning for discard that would encompass any materials "no longer useful in their original capacity" even if they were not destined for disposal. 824 F.2d at 1185–87. The Court further held that the term "discarded materials" could not include materials "* * * destined for beneficial reuse or recycling in a continuous process by the generating industry itself. (824 F.2d at 1190).

Subsequent to AMC I, the DC Circuit discussed the meaning of discard in particular cases. In *American Petroleum Institute* v. *EPA,* 906 F.2d 729 (DC Cir. 1990) ("API I"), the court rejected EPA's decision not to regulate recycled air pollution control equipment slag based on an Agency determination that waste "ceases to be a 'solid waste' when it arrives at a metals reclamation facility because at that point it is no longer 'discarded material.' " 906 F.2d at 740. Instead, the court held that the materials were part of a mandatory waste treatment plan for hazardous wastes prescribed by EPA and continued to be wastes even if recycled. 906 F.2d at 741. Further, a material is a solid waste regardless of whether it "may" be reused at some time in the future. *American Mining Congress* v. *EPA,* 907 F.2d 1179 (DC Cir. 1990) ("AMC II").

One of the more important holdings of a number of court decisions is that simply because a waste has, or may have, value does not mean the material loses its status as a solid waste. *See API I,* 906 F.2d at 741 n.16; *United States* v. *ILCO Inc.,* 996 F.2d 1126, 1131–32 (11th Cir. 1993); *Owen Steel* v. *Browner,* 37 F.3d 146, 150 (4th Cir. 1994). *ILCO and Owen Steel,* however, recognize that products made from wastes are, themselves, products and not wastes.

The DC Circuit's decision in *Association of Battery Recyclers* v. *EPA,* 208 F.3d 1047 (DC Cir. 2000) ("ABR") reiterated the concepts discussed in the previous cases. The Court held that it had already resolved the issue presented in ABR in its opinion in AMC I, where it found that "* * * Congress unambiguously expressed its intent that 'solid waste' (and therefore EPA's regulatory authority) be limited to materials that are 'discarded' by virtue of being disposed of, abandoned, or thrown away" (208 F.2d at 1051). It repeated that materials reused within an ongoing industrial process are neither disposed of nor abandoned (208 F.3d at 1051–52). The court also explained that the intervening API I and AMC II decisions had not narrowed the holding in AMC I (208 F.3d at 1054–1056).

Notably, the Court in ABR did *not* hold that storage before reclamation automatically makes materials "discarded." Rather, it held that "* * * at least some of the secondary material EPA seeks to regulate as solid waste (in

the mineral processing rule) is destined for reuse as part of a continuous industrial process and thus is not abandoned or thrown away" (208 F.3d at 1056). In this regard, the court criticized all parties in the case—industry as well as EPA—because they "presented this aspect of the case in broad abstraction, providing little detail about the many processes throughout the industry that generate residual material of the sort EPA is attempting to regulate * * *." (Ibid).

American Petroleum Institute v. *EPA,* 216 F.3d 50, 55 (DC Cir. 2000) ("API II"), decided shortly after ABR and considered by the court at the same time, provides further guidance for defining solid waste, but in the context of two specific waste streams in the petroleum refining industry. The court overturned EPA's determination that certain recycled oil bearing wastewaters are wastes (216 F.3d at 55–58) and upheld conditions imposed by the Agency in excluding petrochemical recovered oil from the definition of solid waste (216 F.3d at 58–59). In the case of oil-bearing wastewaters, EPA had determined that the first phase of treatment, primary treatment, results in a waste being created. 216 F.3d at 55. The court overturned this decision and remanded it to EPA for a better explanation, neither accepting EPA's view nor the contrary industry view. The court noted that the ultimate determination that had to be made was whether primary treatment is simply a step in the act of discarding or the last step in a production process before discard. 213 F.3d at 57. In particular, the court rejected EPA's argument that primary treatment was required by regulation, instead stating that the Agency needed to "set forth why it has concluded that the compliance motivation predominates over the reclamation motivation" and "why that conclusion, even if validly reached, compels the further conclusion that the wastewater has been discarded." 213 F.3d at 58.

The court also considered whether material is discarded in *Safe Food and Fertilizer* v. *EPA,* 350 F.3d 1263 (DC Cir. 2003) ("Safe Food"). In that case, among other things, the court rejected the argument that, as a matter of plain meaning, recycled material destined for immediate reuse within an ongoing industrial process is never considered "discarded," whereas material that is transferred to another firm or industry for subsequent recycling must always be solid wastes. 350 F.3d at 1268. Instead, the court evaluated "whether the agency's interpretation of * * * 'discarded' * * * is, reasonable and consistent with the statutory purpose* * *." *Id.* Thus, EPA has the discretion to determine that a material is not a solid waste, even if it is transferred between industries.

We also note that the Ninth Circuit has specifically found that non-hazardous secondary materials may, under certain circumstances, be burned and not constitute a solid waste under RCRA. *See Safe Air For Everyone* v. *Waynemeyer* ("Safe Air"), 373 F.3d 1035 (9th Cir., 2004) (Kentucky bluegrass stubble may be burned to return nutrients to the soil and not be a solid waste).

C. The Concept of Legitimacy

An important element under the RCRA subtitle C definition of solid waste (and an important element of today's proposal) is the concept of legitimate use and recycling. Under RCRA subtitle C, some hazardous secondary materials that would otherwise be subject to regulation under RCRA's "cradle to grave" system are not considered solid wastes if they are "legitimately recycled" or legitimately used as an ingredient or substitute for a commercial product. The principal reasoning behind this construct is that use or recycling of such materials often closely resembles normal industrial production, rather than waste management. However, since there can be considerable economic incentive to manage recyclable materials outside of the RCRA hazardous waste regulatory system, there is a clear potential for and historical evidence of some handlers claiming they are recycling, when in fact they are conducting waste treatment and/or disposal in the guise of recycling. EPA considers such "sham" recycling to be, in fact, discard and such secondary materials being sham recycled are solid wastes.

To guard against hazardous secondary materials being discarded in the guise of recycling, EPA has long articulated the need to distinguish between "legitimate" (*i.e.,* true) recycling or other use and "sham" (*i.e.,* fake) recycling; *see* the preamble to the 1985 hazardous waste regulations that established the definition of solid waste under RCRA subtitle C (50 FR 638; January 4, 1985). A similar discussion that addressed legitimacy as it pertains to burning hazardous secondary materials for energy recovery (considered a form of recycling under RCRA subtitle C) was presented in the January 9, 1988 proposed amendments to the definition of solid waste (53 FR 522). Then on April 26, 1989, the Office of Solid Waste [13] issued a memorandum that consolidated the various preamble and other statements concerning legitimate recycling into a list of questions to be considered in evaluating the legitimacy of hazardous secondary materials recycling (OSWER directive 9441.1989(19)). This memorandum (known to many as the "Lowrance Memo," a copy of which is included in the Docket to today's preamble) has been a primary source of information for the regulated community and for overseeing agencies in distinguishing between legitimate and sham recycling.

On October 30, 2008, EPA finalized several exclusions from the definition of solid waste for hazardous secondary materials being reclaimed and a non-waste determination process for persons to receive a formal determination that their hazardous secondary materials are not solid wastes when legitimately reclaimed.[14] In that action, EPA codified in 40 CFR 260.43 the requirement that materials be legitimately recycled as a condition for the exclusion for hazardous secondary materials that are legitimately reclaimed under the control of the generator (40 CFR 261.2(a)(2)(ii) and 40 CFR 261.4(a)(23)) and as a condition of the exclusion for hazardous secondary materials that are transferred for the purpose of legitimate reclamation (40 CFR 261.4(a)(24) and 40 CFR 261.4(a)(25)). As part of that final rule, EPA also codified a legitimate recycling provision specifically as a requirement or condition of these exclusions and the non-waste determination process (40 CFR 260.34).

Although this proposed rule does not address the Agency's hazardous waste regulations, EPA believes the concept of legitimacy is an important one in determining when a secondary material is genuinely recycled and not discarded under the guise of recycling. Therefore, the Agency is including the following discussion in today's preamble to provide the context in which EPA has integrated the concept of legitimacy into the recently promulgated hazardous waste exclusions from the definition of solid waste.[15]

[13] On January 9, 2009, the Office of Solid Waste was renamed the Office of Resource Conservation and Recovery.

[14] *See* 73 FR 64668.

[15] The hazardous waste exclusions from the definition of solid waste became effective on December 29, 2008. On January 29, 2009, the Sierra Club submitted a petition under RCRA section 7004(a), 42 U.S.C. 6974(a), to the Administrator of EPA requesting that the Agency repeal the revisions to the definition of solid waste rule and stay the implementation of the rule. In addition, the Sierra Club and the American Petroleum Institute have filed petitions for judicial review of a rule with the

Continued

The legitimacy provision in the October 2008 final rule, which applies specifically to hazardous secondary materials excluded under the rule, has two parts. The first part includes two factors: (1) the hazardous secondary materials being recycled must provide a useful contribution to the recycling process or to the product or intermediate of the recycling process, and (2) the product or intermediate produced by the recycling process must be valuable. These two legitimacy factors make up the core of legitimacy, and, therefore, a process that does not conform to them cannot be a legitimate recycling process, but would be considered sham recycling.

The second part of the legitimacy provision consists of two factors that must be considered when determining if a particular hazardous secondary material recycling process is legitimate for the purposes of the exclusion. These two factors are: (1) The generator and the recycler should manage the hazardous secondary material as a valuable commodity, and (2) the product of the recycling process does not contain significant concentrations of hazardous constituents that are not in analogous products. EPA believes these two factors are important in determining legitimacy, but has not made them factors that must be met because the Agency is aware of situations where a legitimate recycling process exists, but may not conform to one or both of these two factors. In making a determination that a hazardous secondary material is legitimately recycled, persons must evaluate all factors and consider legitimacy as a whole. If, after careful evaluation of these other considerations, one or both of the non-mandatory factors are not met, then this fact may be an indication that the material is not legitimately recycled. To evaluate the extent to which these factors are met and in determining the legitimacy of a recycling process that does not meet one or both of these factors, persons can consider the protectiveness of the storage methods, exposure from toxics in the product, the bioavailability of the toxics in the product, and other relevant considerations.

EPA stated in the preamble to the October 2008 final rule that, although the Agency was only codifying the legitimacy provision as part of the new hazardous secondary materials recycling exclusions and non-waste determination process, it was stressing that EPA retains its long-standing policy that all recycling of hazardous secondary materials must be legitimate and that the four legitimacy factors codified at 40 CFR 260.43 are substantively the same as the Agency's long-standing legitimacy policy, as stated in the 1989 Lowrance Memo and in various definition of solid waste rulemakings.

EPA believes the same principle of "legitimacy" is likewise an important element in the recycling of non-hazardous secondary materials. That is, the concept of legitimate recycling is crucial to determining whether a non-hazardous secondary material being recycled is truly being recycled or is, in fact, being discarded through sham recycling. In the January 2, 2009 ANPRM, the Agency sought comment on the appropriate construct for determining when such non-hazardous secondary materials are legitimately burned as a fuel or used as a legitimate ingredient in an industrial process that involved combustion (*see* Section V, 74 FR 53–9). A general discussion of the comments EPA received follows in Section VII.C.

VII. ANPRM Discussion, Summary of the Proposed Approach, Comments Received on the ANPRM, and Rationale for and Detailed Description of the Proposed Rule

A. Summary of the ANPRM Approach

In the ANPRM, the Agency considered various scenarios in evaluating the usage of secondary materials (*e.g.,* as fuels or ingredients) and whether these materials should be considered solid wastes under RCRA when used in combustion devices, such that units burning these secondary materials would be subject to regulation under CAA section 129, rather than subject to CAA section 112. Specifically, the ANPRM identified several cases where such non-hazardous secondary materials are not solid wastes when combusted, and thus, subject to CAA section 112. These were: (1) Traditional fuels, (2) secondary materials used as legitimate "alternative" fuels that have not been previously discarded, (3) secondary materials used as legitimate "alternative fuels" resulting from the processing of discarded secondary materials, (4) secondary materials used as legitimate ingredients, and (5) hazardous secondary materials that may be excluded from the definition of solid waste under RCRA subtitle C because they are more like commodities than wastes. All other cases where non-hazardous secondary materials are combusted would be considered "solid wastes" and subject to CAA section 129.

1. Traditional Fuels

The ANPRM categorized cellulosic biomass (*e.g.,* wood) and fossil fuels (*e.g.,* coal, oil, natural gas) and their derivatives (*e.g.,* petroleum coke, bituminous coke, coal tar oil, refinery gas, synthetic fuel, heavy recycle, asphalts, blast furnace gas, recovered gaseous butane, coke oven gas) as traditional fuels that have been burned historically as fuels and have been managed as valuable products, and stated that they are considered unused products that have not been discarded and therefore are not solid wastes. The ANPRM further stated that wood collected from forest fire clearance activities and trees and uncontaminated wood found in disaster debris would not be discarded if managed properly and burned as a legitimate fuel, and therefore not a solid waste.

2. Guiding Principles Used To Determine if Secondary Materials Used in Combustion Units Are Solid Wastes

The ANPRM explained key factors in determining if alternative fuels or ingredients are solid wastes under RCRA, including whether they have been discarded, and if they have been discarded, whether they have been processed to produce a fuel or ingredient product that would not be considered a solid waste. The ANPRM further explained that the plain-English meaning of the term discard applies to the RCRA definition of solid waste. That is, a material is discarded if it is disposed of, thrown away, or abandoned. Moreover, the ANPRM stated the term "discarded materials" could not include materials " * * * destined for beneficial reuse or recycling in a continuous process by the generating industry itself," and that determining whether a secondary material is used in a continuous process is important because certain materials under consideration are produced and managed in a continuous process within an industry (*e.g.,* cement kiln dust that is recycled in cement kilns). The ANPRM went on to say that even if the secondary material is not used in a continuous process, if it is used as a legitimate fuel or ingredient, these secondary materials are not solid wastes if they were not previously discarded.

For alternative fuels or ingredients not to be considered discarded, and thus not to be solid wastes, the ANPRM stated that they must be legitimate fuels or ingredients. It then described EPA's criteria for determining if a secondary

United States Court Of Appeals for The District Of Columbia Circuit. One of the issues that EPA will consider is the definition of legitimate recycling. However, until that occurs, the final rule, including the definition of legitimate recycling remains in effect until and unless EPA goes through another rulemaking process (proposed and final) to repeal or amend it.

material is a legitimate fuel or ingredient. The Agency explained that it generally considers secondary materials to be legitimate non-waste fuels if they are handled as valuable commodities, have meaningful heating value, and contain contaminants that are not significantly higher in concentration than traditional fuel products. If these criteria are not met, sham recycling may be indicated and the secondary material might be a solid waste. Similarly, for non-hazardous secondary materials to be considered a non-waste ingredient, the ANPRM stated that it would generally consider secondary materials to be non-waste ingredients if the secondary material is handled as a valuable commodity, the secondary material provides a useful contribution, the recycling results in a valuable product, and the product does not contain contaminants that are significantly higher in concentration than traditional products.

3. Secondary Materials Used as Legitimate "Alternative" Fuels That Have Not Been Previously Discarded

For legitimate "alternative" fuels that have not been previously discarded, the ANPRM stated that the question of what constitutes a legitimate "fuel" reflects the availability of fuel materials generally, the demand for fuel, and technology developments. Thus, in addition to traditional fuels, the ANPRM stated that there is a category of secondary materials that are legitimate alternative fuels; that is, there are secondary materials that may not have been traditionally used as fuels, but that are nonetheless legitimate fuels today because of changes in technology and in the energy market. In cases where these legitimate alternative fuels have not been discarded, EPA said that it would not consider them to be solid wastes. We stated that much of the biomass currently used as alternative fuels are not solid waste since they have not been discarded in the first instance and are legitimate fuel products, noting that biomass can include a wide range of alternative fuels, and can be broken down into two different categories—cellulosic biomass and non-cellulosic biomass. Cellulosic biomass was described to include forest-derived biomass (*e.g.,* green wood, forest thinnings, clean and unadulterated bark, sawdust, trim, and tree harvesting residuals from logging and sawmill materials), food scraps, pulp and paper mill wood residuals (*e.g.,* hog fuel, such as clean and unadulterated bark, sawdust, trim screenings; and residuals from tree harvesting), and agricultural residues (*e.g.,* straw, corn husks, peanut shells, and bagasse). Non-cellulosic biomass was described to include manures and gaseous fuels (*e.g.,* from landfills and manures).

The ANPRM stated that biomass, especially cellulosic biomass, has a comparable composition to traditional fuel products due to the nature of the plants and animals (*i.e.,* they would not be considered to have additional "contaminants"). Thus, if they are managed as valuable commodities and have meaningful heating value, they would not be considered solid wastes.

The ANPRM also noted that tires used as tire-derived fuel (TDF), which include whole or shredded tires, that have not been previously discarded, are legitimate fuels if they meet the legitimacy criteria *i.e.,* they are handled as valuable commodities, have meaningful heating value, and do not contain contaminants that are significantly higher in concentration when compared to traditional fuel products (*see* Materials Characterization Paper on Scrap Tires in the docket for today's rule for a complete discussion on contaminants in TDF [EPA–HQ–RCRA–2008–0329]). We noted that in many cases, used tires that are collected pursuant to state tire oversight programs (*e.g.,* used tires from tire dealerships that are sent to used tire processing facilities) are handled as valuable commodities, and, therefore, have not been abandoned, disposed of, or thrown away. We noted that because states typically regulate these programs under their state solid waste authorities, it is not the Agency's intent to undercut the state's authority in this area. We requested comment on whether tires collected pursuant to state tire oversight programs have been discarded, and also requested comment on whether an EPA designation specifying that used tires, for example, managed pursuant to state collection programs are not solid wastes, would adversely impact a state's ability to manage such a program. EPA notes that it is considering a change regarding the issue of tires collected under state programs, which is discussed later in the preamble. In particular, the Agency proposes that tires collected under these recycling programs are discarded and are solid wastes. EPA proposes this formulation for tires, but is asking for further comment on the ANPRM formulation that secondary material collected and sent for legitimate use as fuels are not discarded and are not solid wastes. For more discussion, *see* sections VII.C.5.c. and VII.D.2 of today's proposal. EPA may issue a final rule containing either set of provisions depending on information received in the comment period and other information available to the Agency.

The ANPRM described other non-traditional alternative fuels in use today that we are evaluating to determine whether they have been discarded and whether they are legitimate alternative fuels (*e.g.,* construction and demolition materials,[16] scrap plastics, non-hazardous non-halogenated solvents and lubricants, and wastewater treatment sludge). The ANPRM then described secondary materials we considered to be questionable as to whether they are legitimate fuels because they lack adequate heating value (wet biomass), or because they may contain contaminants that are significantly higher[17] in concentration than those in traditional fuel products to the degree that sham recycling is indicated. The materials that were described in the ANPRM that could fall into this category include polyvinyl chloride (PVC), halogenated plastics, chromated copper arsenate (CCA) lumber, creosote lumber, copper-based treated lumber, lead-based treated lumber, and secondary mill residues, such as board, trim and breakage from the manufacture of reconstituted wood/panel products.

4. Secondary Materials Used as Legitimate "Alternative" Fuels Resulting From the Processing of Discarded Secondary Materials

The ANPRM also stated that legitimate fuel products may be extracted, processed, or reclaimed from non-hazardous secondary materials that have been discarded in the first instance and that such products would generally not be considered solid waste. Once processed to make a legitimate non-waste fuel product, such a product

[16] EPA is completing a study evaluating the use of a mobile unit for the combustion of vegetative and construction and demolition debris generated from natural disasters. This study includes monitoring of the source and ambient emissions, and a screening risk assessment. Results are projected to be available later in 2010. Extreme care needs to be taken to exclude specific materials in C&D debris, especially regulated-asbestos containing materials (RACM). Additionally, the wiring, plastics, and painted surfaces may contribute to emissions of concern and might not equate to traditional fuels. Upon publication, this study will be available at EPA's National Risk Management Research Laboratory (NRMRL) publications Web site at *http://www.epa.gov/nrmrl/publications.html*.

[17] In determining whether the concentration of contaminants in secondary materials is "significantly higher," the Agency stated in the ANPRM that it could use a qualitative evaluation of the potential human health and environmental risks posed. A contaminant concentration could be elevated without posing unacceptable risk, and therefore may not be considered "significant" for the purposes of determining whether the secondary material is a legitimate fuel.

would not be discarded and therefore would not be a solid waste, provided it met the general principles discussed in today's preamble for being a legitimate fuel. However, until a legitimate product has been processed, the secondary material that has been discarded is a solid waste, and must comply with any federal, state or local regulations. In addition, any waste generated in the "processing" of these materials would need to be managed properly and comply with the appropriate requirements. The ANPRM described various secondary materials that can be processed into fuels, including discarded biomass (*e.g.,* with dewatering/drying techniques to increase the Btu/lb, or stripping the paint off wood to produce clean biomass), coal fines, used oil, tires,[18] landfill ash, and secondary materials that are mixed and processed into pellets (or other forms) that have the consistency and handling characteristics of coal (*e.g.,* K–Fuel, N–Viro). The ANPRM stated that the degree of processing necessarily will vary depending on the specific material, but the objective remains the same—the product from the processing must be a legitimate fuel (*i.e.,* a material with meaningful heating value, with contaminants that are not present at significantly higher concentrations than those of traditional fuel products, and managed as a valuable commodity).

Although the ANPRM stated that forest-derived biomass is not considered to have been discarded, we requested comment on whether any forest-derived biomass that was determined to have been discarded and was subsequently processed by chipping or sorting prior to use as a fuel through combustion would be considered to have undergone adequate processing to convert the discarded material into a fuel product. We also requested comment on whether mined landfill power plant residuals that is crushed, screened, and/or separated into its fundamental components through density separation is adequately processed to convert it into a fuel product or ingredient (under the assumption that it meets our previously described legitimacy criteria).

With respect to used oil, the ANPRM stated that off-specification used oil that is collected from repair shops is generally thought to be originally discarded, but that on-spec used oil was considered to be a product fuel, not a waste. We also requested comment on whether off-specification used oil managed pursuant to the 40 CFR part 279 used oil management standards which are burned for energy recovery should be considered to be discarded, and thus whether such off-specification used oil should be considered a non-waste fuel. We stated that although off-specification used oil may contain contaminant levels that are higher in concentration than traditional (virgin) fossil fuels, they still are managed within the constraints of the used oil management standards, and may only be burned in specific types of combustion devices.

5. Secondary Materials Used as Legitimate Ingredients

For secondary materials used as ingredients, the ANPRM also stated we must determine whether alternative ingredients, such as CKD, bottom ash, boiler slag, blast furnace slag, foundry sand, and secondary glass material have been discarded, or whether they are being used as legitimate non-waste ingredients. For example, the ANPRM stated that coal fly ash is handled as a commodity within continuous commerce when it is marketed to cement kilns as an alternative ingredient, and would not be considered a waste if it met the legitimacy criteria.

The ANPRM also stated that secondary materials used as ingredients that were previously discarded could be processed into legitimate non-waste ingredients.

6. Hazardous Secondary Materials That May Be Excluded From the Definition of Solid Waste Under RCRA Subtitle C Because They Are More Like Commodities Than Wastes

In the ANPRM, the Agency explained that, under the hazardous waste regulations, EPA has evaluated a number of hazardous secondary materials that are legitimately used or recycled and determined that such materials, while they either met a listing description or exhibited one or more of the hazardous waste characteristics, were not "solid wastes" for purposes of the subtitle C hazardous waste regulations. Specifically, black liquor, spent sulfuric acid, and comparable fuels may be burned under certain conditions and would not be solid wastes. The ANPRM discussed EPA's interest in extending this determination so that these materials are not considered solid wastes under RCRA subtitle D as well.

7. Additional Areas for Comment in the ANPRM

a. Fuels or Materials That Have Been Discarded That Are Generally Considered To Be Solid Wastes

The ANPRM explained that secondary materials that have been previously discarded and not subsequently processed into legitimate fuels or ingredients are considered solid wastes under RCRA. However, the Agency requested comment as to whether these discarded materials—once recovered from the discard environment—should no longer be considered solid waste (assuming they are in fact valuable fuels or ingredients and otherwise meet the legitimacy criteria once recovered). EPA recognized that waste can be burned for energy or material recovery. Such materials, once they have been discarded, generally are considered "solid wastes" and units that burn these materials would be subject to the CAA section 129 incineration standards if they have not been processed into a legitimate non-waste ingredient or fuel. However, the ANPRM explained that as prices for primary materials have increased, in many cases, the economics of using secondary materials as a substitute for primary materials has shifted, changing how the secondary materials are considered in commerce. In addition, new technologies can expand the universe of secondary materials that could be considered legitimate fuels.

The ANPRM therefore requested comment on those situations where discarded materials (*e.g.,* used tires and coal refuse) can be directly used as a legitimate fuel or ingredient without processing because they are indistinguishable in all relevant aspects from a fuel or ingredient product. (Note that the Agency only requested comment on these secondary materials at the point they have been removed from their "discard" environment and managed as valuable commodities. Materials that have been disposed of in abandoned piles or landfills are clearly discarded while they remain in those environments and are subject to appropriate federal, state and local regulations.)

b. Other Approaches for Determining Whether Secondary Materials Are Fuels and Not Solid Wastes

The ANPRM requested comment on an approach, as presented to the Agency by industry representatives, for determining when non-hazardous secondary materials are fuels and thus, not solid waste, and how the process

[18] Turning scrap tires into TDF can involve two physical processing steps: Chipping/shredding and in some cases metal removal. The ANPRM stated that, at that point, the Agency's view was that tire shredding/chipping alone (without metal recovery), as well as in combination with metal recovery, are legitimate processing activities sufficient to convert a discarded material into a fuel product.

may be implemented.[19] Industry representatives suggested that non-hazardous secondary materials should be evaluated, on a case-by-case basis, to identify which criteria have been satisfied and determine whether the material is legitimately handled as a fuel. Criteria identified by industry stakeholders include: handling and storage of materials to minimize loss, use of materials within a reasonable period of time, material value (*e.g.,* whether there is a market for the material as a fuel, internal or external to the company), material managed and treated as a commodity, and processing of material to enhance fuel value. Under the industry recommended approach, the secondary material would not necessarily have to satisfy all criteria. To implement the aforementioned concepts for determining when or which secondary materials are fuels, the ANPRM described two methods presented by industry, which were not meant to be mutually exclusive. One method is self-implementing, by which an owner or operator of a combustion device must determine that the secondary material meets the criteria set forth and maintain records to demonstrate that these criteria are met. The other method is not self-implementing, but would allow an owner or operator to petition EPA or the state to specifically list a secondary material as a legitimate non-waste fuel (in addition to a pre-established list of materials). In the petition, the owner or operator would use the criteria as the basis for proposing that EPA or the state list the secondary material, or the owner or operator could submit additional information to demonstrate the environmental equivalence of the material to other listed fuels.

c. Materials for Which State Beneficial Use Determinations Have Been Made

The ANPRM explained that states regulate the management of non-hazardous solid waste, including secondary industrial materials, and that many states have a process or promulgated regulations to determine when these materials are no longer wastes because they can beneficially and safely be used as products in commerce. Materials are no longer subject to the state's solid waste regulations under the state rules when the state determines that the secondary materials are no longer solid wastes when beneficially used. The ANPRM further explained that the states are the lead Agencies for implementing the non-hazardous waste programs and, as such, the Agency wanted to make sure that state programs are not adversely affected by any decisions that are made by EPA, noting that we see a benefit to deferring to state decisions, which are able to consider site-specific information. As a result, the Agency requested comments on whether to consider secondary materials that receive a state beneficial use determination for use as a fuel or as an ingredient as not a solid waste, also not be considered a solid waste under federal law.

d. Biofuels

Biofuels can be generally described as a gas or liquid fuel made from biological materials, including plants, animal manure, and other organic sources. The ANPRM noted that biofuel production has increased dramatically in the past few years and is expected to continue increasing over the coming years, and stated that biofuels produced from secondary materials, such as ethanol and biodiesel, are not considered to be solid wastes themselves, but rather are viewed as legitimate fuel products. Secondary materials associated with biofuel production can be viewed to include both the feedstock materials that are used to produce biofuels, as well as the byproducts generated from the production of biofuels. The ANPRM stated that these materials are considered legitimate alternative fuels when they have meaningful heating value, do not contain contaminants that are significantly higher in concentration than traditional fuels, and are handled as a valuable commodity.

B. Summary of the Proposed Approach

1. Changes from the ANPRM Approach

While many of the concepts and provisions that were discussed in the ANPRM are included in this proposal, including discard and the legitimacy criteria, the basic framework is different based partly on the approach taken in the Definition of Solid Waste (DSW) final rule promulgated on October 30, 2008 (*see* 73 FR 64668) under subtitle C of RCRA, based partly on the comments received (*see* section VII.C for the comments and EPA's response), as well as on our interpretation of whether these secondary materials are considered to be discarded (*see* section VII.C.2 for the comments and EPA's response).

The ANPRM indicated that there may be a number of secondary materials that would not be considered discarded even if the original generator sent them to another entity outside of its control. For example, used tires collected from automobiles at tire dealerships and managed pursuant to state tire collection programs were not viewed as solid wastes in the ANPRM. Comments received from some states suggested that non-hazardous secondary material fuels that are transferred to a third party have entered what is traditionally considered to be the "waste stream" (and have been regulated by the states as wastes) and therefore should appropriately be considered wastes (*e.g.,* scrap tires) unless/until they are processed into non-waste fuel products. As discussed below, this proposal assumes that non-hazardous secondary materials that are used as fuels and are managed outside the control of the generator are solid wastes unless they are processed into non-waste fuel products. (Note: The same non-hazardous secondary material that is burned for energy recovery under the control of the generator and meets the legitimacy criteria would not be considered a solid waste since the non-hazardous secondary material would not be considered discarded.)

We are also proposing, as discussed below, a non-waste determination petition process. That process will allow those persons who burn non-hazardous secondary material fuels that are not managed within the control of the generator (that this proposal would consider to be solid wastes), to petition EPA for a determination that such non-hazardous secondary materials are not discarded and therefore, are not solid wastes (assuming these materials have met the applicable legitimacy criteria). While the Agency recognizes that a petition process can be resource intensive, we also believe it necessary and appropriate to provide an opportunity for persons to demonstrate to EPA that their non-hazardous secondary material fuels would not be considered "discarded" under RCRA and therefore, not solid waste.

Furthermore, some other important changes were made between the ANPRM and this proposal based on comments received and further investigation. One of the differences is the classification of "clean" biomass and on-specification used oil as a traditional fuel (*see* section VII.C.5.b.). In addition, EPA is only addressing non-hazardous secondary materials in this rulemaking, and thus, has decided not to address hazardous secondary materials that have been excluded from the definition of solid waste under subtitle C of RCRA in this rulemaking proceeding. Instead, facilities combusting hazardous secondary materials should refer to

[19] A copy of this industry-recommended approach entitled, "Outline of Regulatory Approach to Determine Materials Considered Fuels—not Solid Wastes—under RCRA," is included in the docket to today's proposed rule.

EPA's Subtitle C hazardous waste regulations to determine whether the materials they are combusting are solid wastes. Each of these changes is discussed in detail in the referenced sections.

2. General Proposed Approach

This proposal maintains the same general principles for determining whether a non-hazardous secondary material is or is not a solid waste as expressed in the ANPRM. Under the proposed rule, the following are not solid wastes when combusted for purposes of the CAA: non-hazardous secondary materials used as fuels that remain within and are combusted within the control of the generator and that meet the legitimacy criteria; non-hazardous secondary materials that meet the legitimacy criteria and are used as ingredients in a manufacturing process; materials that meet the legitimacy criteria and have been sufficiently processed into a fuel or ingredient from discarded non-hazardous secondary materials that have been discarded; and non-hazardous secondary materials used as a fuel that does not remain within the control of the generator for which EPA grants a facility's petition for a "non-solid waste" determination.

The term "discarded" is intended to encompass material handling and management scenarios that meet the plain meaning of discard (abandoned, disposed of, or thrown away). For example, a secondary material that is thrown away and disposed of in a landfill is considered to have been discarded in the first instance. Materials that have been discarded in the first instance are solid waste even if they satisfy the legitimacy criteria (unless they are processed into a legitimate non-waste product) since both wastes and non-wastes may be legitimately recycled.

3. Legitimacy Criteria

This proposal also maintains the same general principles as described in the ANPRM for determining whether a non-hazardous secondary material is or is not a legitimate fuel or ingredient. Secondary materials used in a combustion unit that are not a legitimate fuel or ingredient would be considered sham recycling and thus, a solid waste. For legitimate fuels, non-hazardous secondary materials must be handled as a valuable commodity, have meaningful heating value, be used as a fuel in a combustion unit that recovers energy, and contain contaminants at levels comparable to those in traditional fuels. As used throughout today's proposal, "comparable" levels of contaminants refer to levels that are comparable or less than those in traditional fuels. For legitimate ingredients, the non-hazardous secondary material must be handled as a valuable commodity, provide a useful contribution, result in a valuable product or intermediate, and result in products that contain contaminants at levels that are comparable in concentration to those found in traditional products that are manufactured without the non-hazardous secondary material. As with fuels, contaminant levels that are comparable refers to levels that are comparable or less than contaminant levels found in traditional products that are manufactured without the non-hazardous secondary material ingredients.

4. Traditional Fuels

This proposal recognizes that traditional fuels are not solid wastes when burned in a combustion unit. Traditional fuels are those fuels that have been historically managed as valuable fuel products rather than being managed as waste materials. Traditional fuels include fossil fuels (*e.g.,* coal, oil, including used oil meeting on-specification levels, natural gas) and their derivatives (*e.g.,* petroleum coke, bituminous coke, coal tar oil, refinery gas, synthetic fuel, heavy recycle, asphalts, blast furnace gas, recovered gaseous butane, and coke oven gas). Clean cellulosic biomass materials are also traditional fuels rather than wastes when burned as a fuel. "Clean" material is defined as those non-hazardous secondary materials that have not been altered (either chemically or through some type of production process), such that it contains contaminants at concentrations normally associated with virgin biomass materials. Clean cellulosic biomass includes forest-derived biomass (*e.g.,* green wood, forest thinnings, clean and unadulterated bark, sawdust, trim, and tree harvesting residuals from logging and sawmill materials), corn stover and other biomass crops used specifically for energy production (*e.g.,* energy cane, other fast growing grasses), bagasse[20] and other crop residues (*e.g.,* peanut shells), wood collected from forest fire clearance activities, trees and clean wood found in disaster debris, and clean biomass from land clearing operations.

We request comment on whether other fuels in use today also should be classified as traditional fuels, and also whether other types of cellulosic biomass should be designated as clean biomass, and thus a traditional fuel. In identifying other secondary materials as a traditional fuel, commenters will need to explain why such materials should be considered a traditional fuel—that is, an explanation of how the materials have historically been managed as a valuable fuel product and not a waste.

EPA acknowledges that changes in technology and in the energy market over time may result in additional secondary materials being economically viable to be used as "traditional" fuels. It also may not always be clear whether a fuel material is a traditional fuel. We agree with commenters to the ANPRM that this rulemaking should be flexible to account for increasing use and changes in commodities, technologies, markets, and fuel prices. We, therefore, request comment on whether we should provide a petition process that would allow a facility or person to request that EPA determine whether the fuel that they burn qualifies as a traditional fuel. If we adopt such a petition process, it would be implemented through the same process as the non-waste determination petition process discussed in section VII.D.5.

5. Circumstances Under Which a Non-Hazardous Secondary Material Would Not Be Considered a Solid Waste

Non-hazardous secondary materials used as fuels in combustion units would be considered solid wastes unless: (1) The non-hazardous secondary materials (not otherwise discarded) remain under the control of the generator as discussed in section VII.D.1, and meet the legitimacy criteria; or (2) they are legitimate non-waste fuels that meet the legitimacy criteria and are produced from the processing of discarded non-hazardous secondary materials as discussed in section VII.D.4. Non-hazardous secondary materials used as a fuel in combustion units that are transferred to a third party are considered solid wastes unless a non-waste determination has been granted pursuant to the proposed petition process (discussed below).

Non-hazardous secondary materials used as ingredients that are combusted in combustion units would not be considered solid waste if they have not been discarded in the first instance and if they are legitimate ingredients, irrespective of whether they have been transferred to a third party. We are not

[20] Bagasse is the matted cellulose fiber residue from sugar cane that has been processed in a sugar mill. For more information on bagasse, *see* the Materials Characterization Paper on Biomass-Agricultural Residues and Food Scraps, which is located in the docket of today's proposed rule.

proposing to differentiate ingredients that are used within the control of the generator from those that are not since we believe the use of non-hazardous secondary materials as ingredients is considered to be more integral or akin to use in a commercial manufacturing process and thus these non-hazardous secondary materials would not be considered discarded provided they satisfy the legitimacy criteria.

Except for the petition process, the proposed criteria are designed to be self-implementing in nature, not requiring Agency action. As such, we are proposing that it will be the facility's (*i.e.,* the facility that burns the material) responsibility to determine if the secondary material satisfies the proposed criteria that identifies which material is a solid waste when burned in a combustion unit.

6. Petition Process

EPA is also proposing to establish a non-waste determination petition process for secondary materials used as fuels outside the control of the generator. The petition process provides persons with an administrative process for a formal determination that their non-hazardous secondary material fuel has not been discarded and is indistinguishable in all relevant aspects from a fuel and therefore not a solid waste. The determination will be based on whether the non-hazardous secondary material has been discarded, is a legitimate fuel and the following criteria: (1) Whether market participants handle the non-hazardous secondary material as a fuel rather than a solid waste; (2) whether the chemical and physical identity of the non-hazardous secondary material is comparable to commercial fuels; (3) whether the non-hazardous secondary material will be used in a reasonable time frame given the state of the market; (4) whether the constituents in the non-hazardous secondary material will be released to the air, water, or land from the point of generation to the combustion of the secondary material at levels comparable to what would otherwise be released from traditional fuels; and (5) other relevant factors. For further information regarding the non-waste determination petition process, *see* section VII.D.5.

EPA developed two flowcharts that generally illustrate the process of determining whether nonhazardous secondary materials burned as a fuel or ingredient in combustion units are or are not solid waste. These diagrams present the proposed rule's basic framework as a series of questions that should be considered when determining the appropriate characterization of a nonhazardous secondary material (*i.e.* as a solid waste or not when burned in a combustion unit). *See* "Flow Chart for Determining Whether Non-Hazardous Secondary Material Ingredients Burned In Combustion Units are Solid Wastes", and "Flow Chart for Determining Whether Non-Hazardous Materials Used as Fuel In Combustion Units are Solid Waste" in the docket for today's proposal. We are soliciting comments on whether these flow charts should be included in the Code of Federal Regulations (CFR) as part of the final rule.

C. What were the major comments on the ANPRM?

1. Comments from State Agencies

EPA received comments from several states and state organizations in response to the ANPRM. Comments received expressed a range of viewpoints representing states with differing solid waste management programs and authorities. Consequently, it was not surprising that the comments received often articulated competing suggestions and recommendations based upon different state programs and experiences.

Comment: Some states did not want EPA to define what is or is not a waste at the federal level if it impacts or limits the scope of what states currently regulate under their solid waste management authority. Some states noted a potential problem related to existing "stringency provisions" in some state laws. For example, if a solid waste determination is made at the federal level, it could be argued that the state is less stringent through their issued exemptions and the state rule must be rescinded. Conversely, some states argued they cannot, by state statute, be more stringent than the Federal regulations, and even if they don't have this statutory limitation, they may feel pressure to not be more restrictive than the federal definition. Many states said we should defer the determination of whether those non-hazardous secondary materials used as fuels or ingredients are solid wastes to the states and urged flexibility in how each state could incorporate any new regulations into its existing solid waste management programs.

EPA's Response: The Clean Air Act (section 129(g)(6)) states that the term "solid waste" shall have the meaning established by the Administrator pursuant to the Solid Waste Disposal Act. Accordingly, EPA must define which non-hazardous secondary materials used as fuels or ingredients in combustion units are solid waste at the national level in order to identify the universe of sources subject to the boilers emissions standards to be issued under CAA section 112 and the CISWI emissions standards to be issued under CAA section 129. *See* section VIII of today's proposal for a discussion on the applicability of state solid waste definitions and beneficial use determinations, as well as a discussion on state adoption of this rulemaking.

Comment: Many states commented that they had long-standing "waste" management programs regulating non-hazardous secondary materials, that no one had questioned the legitimacy of their regulatory programs in the past, and that it was inappropriate and contrary to the intent of RCRA for EPA to exclude this material, which had been considered "waste" for many decades, from regulation under RCRA.

On the other hand, other states were concerned a federal designation that some of these non-hazardous secondary materials are "wastes" would disrupt existing recycling markets by creating a deterrent from using these non-hazardous secondary materials as fuels or ingredients. These states emphasized the importance of promoting beneficial use of non-hazardous secondary materials and were concerned that regulation of certain materials (especially used tires) under CAA section 129 would create negative incentives to their beneficial use and consequently could have negative environmental impacts.

Many states explained that they manage/regulate many of these secondary materials as solid waste (*e.g.,* tires), but determine they are not wastes (via beneficial use determinations) when after analysis the state has determined they are going to a legitimate use (*e.g.,* as a fuel). These states recommended that these materials remain a solid waste until they are approved for, procured and delivered to the potential end user in order to retain their ability to regulate the management of these secondary materials, usually under its solid waste management authority.[21] For example, some states recommended that EPA exclude whole tires from the definition of solid waste at the point of combustion.[22]

[21] Many states regulate used tires under a statutory authority outside of their solid waste management statutory authority, while some states regulate used tires pursuant to both their solid waste management authority, as well as separate tire statutory authority.

[22] Subsequent to the closing of the comment period, the Environmental Council of States (ECOS) approved Resolution 09–7, entitled "Meaning of 'Solid Waste' under the Resource Conservation and Recovery Act (RCRA) as it Applies to Non-

Continued

EPA's Response: In developing this proposed rule, EPA attempted to balance and address the concerns raised by the states regarding potential impacts on their existing solid waste programs in determining which non-hazardous secondary materials are solid wastes when combusted, while at the same time, recognizing that the proposed rule needed to be based on whether these secondary materials are considered to have been managed in a way that meets the plain meaning of discard, as defined in *AMC I.* We believe we have addressed that balance, considering the statutory limitations, but also understand that today's proposal could impact existing state solid waste management programs, as well as states' beneficial use programs, and specifically request comment on how today's proposal impacts or could impact such state programs. For example, does the proposed approach impact the ability of the states to continue to regulate the management of secondary materials prior to their final end use.

Comment: Some state commenters suggested that the Agency address CAA section 129 implementation issues by subcategorizing energy recovery units that burn waste materials and regulate this combustion similarly to the CAA section 112 requirements.[23]

EPA's Response: This comment relates to EPA's regulation of solid waste incineration units under section 129 and is not relevant to this action, which proposes to define "solid waste" under RCRA for non-hazardous secondary materials.

2. Meaning of Discard

As discussed in Section VI, RCRA defines "solid waste" as " * * * any garbage, refuse, sludge from a waste treatment plant, water supply treatment plant, or air pollution control facility and *other discarded material* * * * resulting from industrial, commercial, mining, and agricultural operations, and from community activities * * *" (RCRA section 1004 (27) (emphasis added)). The ANPRM provided a thorough discussion on the definition of solid waste, including a summary of relevant case law. *See* also Section VI.B in today's preamble. Further, the ANPRM highlighted the importance of the concept of "discard," noting that the definition of solid waste turns on the meaning of the phrase, "other discarded material," as this term encompasses all other examples provided in the definition.

Comment: Several comments stressed that the Agency use the plain meaning of discard (*i.e.,* disposed of, abandoned, or thrown away) in defining the term "solid waste" for the purpose of establishing the appropriate standards for combustion units under CAA sections 112 and 129.

EPA's Response: EPA agrees with the premise of using the "plain meaning" of discard, as this position is consistent with case law on the issue (for a more detailed discussion, please refer to the ANPRM and section VI.B of today's preamble).

Comment: Some commenters noted that the same rationale and principles related to "discarded materials" should apply whether these materials are regulated under RCRA subtitles C or D, as the principles related to "discarded materials" are the same. Other commenters argued that the subtitle C approach should not be used for non-hazardous secondary materials since these materials pose less risk relative to hazardous wastes.

EPA's Response: EPA believes it is appropriate to use the same general framework that has been used to define solid waste for purposes of RCRA subtitles C and D (albeit tailored to specifically address non-hazardous secondary materials used as fuels or ingredients in combustion units), noting that the same statutory definition of solid waste applies to both RCRA subtitles D and C. However, EPA is not proposing in today's action any revisions to its hazardous waste regulations.

Comment: Some commenters argued that any secondary materials that are beneficially reused or recycled are not waste, regardless of whether or not the reuse or recycling is conducted in the same or different location or industry (on-site and off-site).

EPA's Response: The Agency does not agree with this assertion, as this position is not consistent with case law. Again, the question of whether a material is or is not a solid waste depends on the issue of discard. In *Safe Food and Fertilizer* v. *EPA,* 350 F. 3d 1263, the court rejected the argument that, as a matter of plain meaning, recycled material destined for immediate reuse within an ongoing industrial process is never considered "discarded," whereas material that is transferred to another firm or industry for subsequent recycling must always be solid wastes. 350 F. 3d at 1268. Instead, the court evaluated "whether the Agency's interpretation of * * * "discarded" * * * is, reasonable and consistent with the statutory purpose." *Id.* Thus, EPA has discretion to determine if non-hazardous secondary materials are not a solid waste if it is managed within the control of the generator, as well as if it is transferred outside the control of the generator. As previously described, this proposal states that non-hazardous secondary materials used as a fuel in combustion units that remain under the control of the generator and meet the legitimacy criteria are not solid waste, but that non-hazardous secondary materials that are transferred to a third party and combusted are considered solid wastes, unless a petition for a non-waste determination has been granted. Ingredients, on the other hand, are determined not to be solid waste even if they are managed outside the control of the generator as long as they meet the legitimacy criteria. *See* section VII.D.6 for a discussion on EPA's rationale for these determinations.

Comment: One commenter noted that EPA's hazardous waste regulations under subtitle C provide that hazardous secondary materials "burned to recover energy" or "used to produce a fuel" are "discarded" and, therefore, are solid wastes. 40 CFR.261.2(c)(2). The commenter went on to point out that under the ANPRM approach, EPA is interpreting the definition of solid waste to mean that burning of non-hazardous secondary material, under appropriate conditions, is not "discard" under RCRA. According to the comment, the ANPRM is inconsistent with the interpretation in 40 CFR 261.2. Regardless of whether EPA believes that it can issue separate definitions of solid waste for hazardous waste and non-hazardous waste, the commenter suggests "discarded" cannot be read both to include materials that are "burned to recover energy" or "used to produce a fuel" and to exclude such materials.

EPA's Response: EPA disagrees with this comment and does not believe the regulations are inconsistent. The hazardous waste definition may be considered a "presumption" that secondary materials burned for energy recovery, or used to produce a fuel, are solid wastes. EPA has, through rulemaking, excluded from the definition of solid waste a number of materials burned for energy recovery under certain conditions. *See* 40 CFR 261.2(c)(2)(A)(ii) (off specification commercial chemicals otherwise listed as hazardous wastes); 261.4(a)(6)("black liquor" in pulping processes);

Hazardous Waste Programs." This resolution, which was revised on March 23, 2010, urges EPA to exclude whole tires from the definition of solid waste for the purposes of combustion. Both the original (dated September 22, 2009) and revised versions are included in the docket for today's rule.

[23] *Id.* ECOS Resolution 09–7 presents this position as an alternative to excluding whole tires from the definition of solid waste for the purposes of combustion.

261.4(a)(7) (spent sulfuric acid); and 261.4(a)(16) (comparable fuels). In addition, EPA has excluded materials used to produce fuels. *See,* 40 CFR 261.4(a)(12) (oil bearing hazardous secondary material inserted into the petroleum refining process), and 261.4(a)(18) (petrochemical recovered oil inserted into the refining process).

Regardless of the appropriateness of these exclusions, or whether the Agency may appropriately exclude any secondary materials from the solid waste definition, consistency between the regulations for hazardous and non-hazardous secondary materials is not an issue. This proposed rule, which identifies certain secondary materials burned for energy recovery as not being solid wastes, is comparable to the conditional exclusions for the definition of solid waste in the hazardous waste regulations. Conditions apply to all of the secondary materials being considered for determinations as to whether they are solid wastes. The legitimacy criteria apply to all of the secondary materials.

It is reasonable and within EPA's discretion to determine that non-hazardous secondary materials may be burned as products and are not wastes. Today's proposal acknowledges the difficulty that the combustion of secondary materials is commonly associated with disposal. However, this view does not take into account that the secondary material may often be used to produce a safe fuel product that is a valuable commodity and is sold in the marketplace no differently from traditional fuels. This position seems like a common sense interpretation of the term, "solid waste," under RCRA.

Another difficulty the Agency faces is the misconception that secondary material that is burned, either for destruction or energy recovery, by definition has high levels of contaminants. The manner in which the secondary material is managed is a key factor that determines discard. Contaminant levels are part of that consideration. If a material has high levels of contaminants, it would be considered sham recycling, which is one type of way a material can be "discarded."

Hazardous secondary materials—those that would be hazardous wastes under RCRA subtitle C, if discarded—are more likely to contain high levels of contaminants. Thus, EPA could reasonably presume that burning such secondary materials, even if burned for energy recovery, is likely a waste activity. This was the Agency's rationale for issuing the subtitle C rule at 40 CFR 261.2(c)(2), which specifies that burning for energy recovery is a waste disposal activity. In EPA's rule establishing the comparable fuels exclusion from the definition of solid waste for hazardous secondary materials, the Agency stated that these hazardous secondary materials (comparable fuels) are lower in hazardous contaminants than the normal hazardous wastes and that burning of the comparable fuels "does not present the element of discarding hazardous constituents through combustion that underlies the typical classification of hazardous waste-derived fuels as a solid waste. 50 FR at 629–630 (Jan. 4, 1985)." 63 FR at 33783 (1998). We may, after looking at certain secondary materials, decide that they are not in fact solid wastes and are being burned as valuable commodities to recover energy. This interpretation, however, is consistent with today's proposal, which also evaluates whether materials burned for energy recovery are wastes or non-wastes.

Moreover, the case law supports the conclusion that materials burned for energy recovery or used to produce fuels may or may not be solid wastes. *American Mining Congress* v. *EPA,* 824 F.2d 1177 (DC Cir. 1987) ("AMC I"), held that the term "discarded materials" could not include materials " * * * destined for beneficial reuse or recycling in a continuous process by the generating industry itself. 824 F.2d at 1190. The provision under consideration in this case dealt specifically with material "reclaimed" in a continuous process. That is, material is regenerated from a secondary material in a continuous process. However, it is highly likely the courts would apply this same reasoning to secondary materials that are otherwise reused or recycled in a continuous industrial process, such as material used, or combusted, to recover energy. *Accord, Association of Battery Recyclers* v. *EPA,* 208 F.3d 1047 (DC Cir. 2000) ("ABR").

It is also worth noting that the Ninth Circuit has specifically found that non-hazardous secondary materials may, under certain circumstances, be burned and not constitute solid waste under RCRA. *See Safe Air For Everyone* v. *Waynemeyer* ("Safe Air"), 373 F.3d 1035 (9th Cir., 2004) (Kentucky bluegrass stubble may be burned to return nutrients to the soil and not be a solid waste). This activity is not waste treatment even in the absence of energy recovery. We believe, therefore, that burning material for another useful purpose (*e.g.,* energy recovery) does not necessarily constitute a disposal activity.

With respect to materials used to produce fuels, in *American Petroleum Institute* v. *EPA,* 216 F.3d 50 (DC Cir. 2000) ("API II"), the court overturned EPA's determination that certain recycled oil bearing wastewaters are wastes (216 F.3d at 55–58) and upheld conditions imposed by the Agency in excluding petrochemical recovered oil from the definition of solid waste (216 F.3d at 58–59). Both of these materials are returned to the petroleum refinery process and used to produce fuel. The court in this case was clearly considering the conditions under which two types of material may be excluded from the definition of solid waste. For purposes of the issue of concern in today's proposal, this decision supports EPA's discretion to determine whether or not a secondary material used as a fuel product is a solid waste or not, in light of factors relevant to determining whether the material is discarded. Therefore, EPA is not prevented from exercising its discretion to decide that issue either way.

3. General Approach

EPA received several comments on the general approach outlined in the ANPRM for determining which non-hazardous secondary materials used as fuels or ingredients in combustion units are or are not solid wastes. Most commenters supported the general regulatory structure that included: (1) A recognition that certain materials are inherently fuel products, (2) a self-implementing approach for identifying those non-hazardous secondary materials that are not considered solid waste pursuant to general criteria and (3) a petition process for receiving a non-waste determination from the Agency.[24]

Comments: Several commenters discussed whether to include a list of wastes and/or a list of non-wastes in the regulations. One commenter recommended that a list of secondary materials that are considered wastes be

[24] On August 18, 2009, EPA received a letter signed by nearly one hundred community groups and citizens that urged for an expansive definition of solid waste for the purposes of combustion and argued against the general approach of the ANPRM. A copy of this letter has been placed in the docket for today's proposed rule. The letter highlights stakeholder concerns regarding the differences between CAA sections 112 and 129 and argues against an overly narrow definition of solid waste. Partially in response to these comments and others, we are considering and taking comment on an alternative approach to that proposed and described in section VII.D. This alternative approach would include, with certain exceptions, non-hazardous secondary materials that are burned as a fuel or used as an ingredient in the combustion process within the definition of solid waste. As such, units combusting those materials would be required to meet CAA section 129 standards. For more information on the alternative approach, see section VII.E of this proposed rulemaking.

identified, rather than a list of secondary materials that are not considered wastes, while other commenters urged for the inclusion of a list of secondary materials that are not considered wastes when burned as a fuel. If EPA included a list of secondary materials that are not considered wastes when burned as a fuel in its regulations, one commenter also suggested that the Agency additionally include a list of secondary materials that are considered wastes in order to remove any uncertainty. Those commenters who urged that the regulations include a list of secondary materials not considered a waste when used as a fuel or ingredient also cautioned that such a list should not be all-inclusive in order to account for changes in technology and new secondary materials and processes that are not yet developed.

EPA's Response: In recognition of changes in economies, technologies, markets and material processes, EPA is not proposing to list specific non-hazardous secondary materials as either wastes or non-wastes in regulatory language, but is rather specifying the criteria to be used to determine if these secondary materials are or are not solid wastes. We believe that there could be instances where determinations of whether a particular non-hazardous secondary material meets the various criteria will have to be based on site-specific information; a national designation that in all circumstances, a particular non-hazardous secondary material is or is not a waste may not be possible. However, it is EPA's goal in this proposal, as well as in the pending final rule preamble, to indicate, as clearly as possible, which non-hazardous secondary materials used as fuels or ingredients in combustion units are or are not considered solid waste based on this criteria. As several commenters also noted, any approach must be flexible enough to account for changing technologies and new secondary materials that could, in the future, be viable fuels or ingredients. The proposed approach allows for these changes, not by codifying a list of specific non-hazardous secondary materials that are or not waste, but rather by adopting a self-implementing approach that can consider site-specific information, if necessary.

Comments: A few commenters noted a preference for categorical determinations that certain secondary materials were products, not wastes (*e.g.,* traditional fuels) along with clear criteria for solid waste determinations for secondary materials not falling into one of these categories (*i.e.* a petition process for non-waste determinations).

EPA's Response: EPA partially agrees with this approach. The proposed rule discusses traditional fuels as a category of fuel products that are not secondary materials and therefore, are not solid waste. With respect to non-hazardous secondary materials, although this proposal does not list types/categories of such secondary materials that are or are not solid waste in regulatory text (as discussed above), we are proposing self-implementing regulatory criteria to be used by the regulated universe to determine whether the non-hazardous secondary material would or would not be a solid waste. The regulatory criteria are based on four categories of non-hazardous secondary materials that are managed under various scenarios, including: (1) Non-hazardous secondary materials that remain within the control of the generator and meet the legitimacy criteria and used as fuel; (2) non-hazardous secondary materials that meet the legitimacy criteria and are used as ingredients; (3) fuel or ingredient products that are processed from discarded non-hazardous secondary materials and that are used as fuels or ingredients in a combustion unit, provided they meet the legitimacy criteria; and (4) EPA has granted a non-waste determination for non-hazardous secondary material fuels managed outside the control of the generator.

More detailed information on these categories and their respective criteria can be found in section VII.D. of this proposal.

Comments: Some commenters suggested that a petition process for a waste determination should not be mandatory. Proponents of this position urged that any regulatory construct for demonstrating that non-hazardous secondary materials qualify as alternative fuels should be self-implementing and not involve the need for individual regulatory determinations.

EPA's Response: The non-waste petition process that applies to non-hazardous secondary material fuels managed outside the control of the generator is not mandatory; however, we note that the assumption in this proposed rule is that these materials would be a solid waste, unless they are granted a non-waste determination by EPA. Also, as explained above, we are proposing a self-implementing approach for all the other non-hazardous secondary material management categories that can consider site-specific information, if necessary (*i.e.,* facilities will make a self-determination of whether the non-hazardous secondary material in question meets the regulatory criteria). We again note it is EPA's intention to indicate in the preamble, as clearly as possible, which non-hazardous materials used as fuels or ingredients in combustion units are or are not considered solid waste based on the criteria laid out in regulatory text. The Agency expects this self-implementing approach will govern for the majority of situations.

4. Level of Processing Needed To Produce a Non-Waste Product From Discarded Waste Material

In the ANPRM, we stated that if a non-hazardous secondary material is processed into a legitimate fuel or ingredient product, then the processed material would not be a discarded material. We listed various non-hazardous secondary materials we believed to have undergone adequate processing (*e.g.,* tire-derived fuel), and requested comment on whether some of the materials, such as mined landfilled ash, should be considered to have undergone adequate processing, such that it would be rendered a non-waste.

Comments: Most commenters generally agreed with the concept, but had differing views on what level of "processing" would render a discarded material a legitimate non-waste product fuel or ingredient product. Their views ranged from not requiring any processing, to specifying a minimum level of processing if processing criteria are retained. These commenters argued that any management activity associated with recovering the non-hazardous secondary material would be sufficient. Commenters who indicated that the non-hazardous secondary material should not be required to "undergo processing" before it is considered a non-waste fuel or ingredient argued that as long as these secondary materials meet the legitimacy criteria, they should not be viewed as a solid waste once recovered from the discard environment; these commenters provided examples of non-hazardous secondary materials, such as whole tires, biomass, and coal fly ash. Also, some commenters stated that the act of recovering or "extracting" the material from the "discard environment" should constitute the requisite degree of processing needed. Commenters who argued that no minimum level of processing be specified supported their position by noting that procedures for recovering solid waste vary widely and that the amount of processing required would be dependent on the application for which the non-hazardous secondary material is being prepared.

EPA's Response: We disagree with the commenters who generally argued that no level of processing or even a

minimum level of processing should be sufficient to produce a non-waste fuel or ingredient. We likewise disagree with those commenters who argued that the act of recovering or "extracting" secondary material from the discard environment should be sufficient to be considered processing. Rather, the Agency believes that sufficient processing of the secondary material (*e.g.,* changing the mass, chemical make-up, or removing particular components from the secondary material) must be undertaken to transform a waste-derived fuel or waste-derived ingredient into a fuel or ingredient product. Thus, our position on this issue has changed from that discussed in the ANPRM, as explained below.

For example, the Agency no longer believes that, in light of the proposed definition of processing, simply cutting or sizing a material is sufficient to produce a product fuel or ingredient. Specifically, under the proposed rule, processing "means any operations that transform discarded non-hazardous secondary material into a new fuel or new ingredient product. Minimal operations, such as operations that result only in modifying the size of the material by shredding, do not constitute processing for purposes of this definition. Processing includes, but is not limited to, operations that: Remove or destroy contaminants; significantly improve the fuel characteristics of the material, *e.g.,* sizing or drying the material in combination with other operations; chemically improve the as-fired energy content; and improve the ingredient characteristics." *See* the proposed definition in § 241.2.

We believe the proposed definition is specific enough to describe the general level of processing that would be needed, but flexible enough to apply broadly to the wide range of non-hazardous secondary materials that are currently under consideration, or that could be under consideration in the future as technologies change. We believe that discarded non-hazardous secondary materials must be sufficiently processed in order to render a secondary material into a non-waste product. Without sufficient processing, the non-hazardous secondary material that is produced would remain a waste-derived fuel or waste-derived ingredient, and if burned in a combustion unit, would be subject to the CAA section 129 requirements. The Agency specifically requests comment on these points.

See section VII.D.4 for a discussion of the processing of discarded non-hazardous secondary materials into non-waste fuel or ingredient products. That section describes EPA's rationale for why this processed material is no longer considered a solid waste, as well as examples of processing that EPA believes does or does not meet the requisite level to render a discarded secondary material into a non-waste product.

5. Comments on Specific Materials Used as Fuels

In the ANPRM, we listed a number of non-hazardous secondary materials, as well as traditional fuels, that we believe are currently being used as fuels and ingredients. We solicited comment on additional information, including: The composition or characteristics of non-hazardous secondary materials; how much of the non-hazardous secondary material is produced and utilized; how it is utilized (*i.e.* as a fuel or an ingredient); and how it is generally handled. The majority of comments submitted for fuels were in regard to traditional fuels and the following non-hazardous secondary materials—biomass, used tires, used oil, coal refuse, and sewage sludge.

a. Traditional Fuels. The ANRPM described traditional fuels to include: Coal, oil, natural gas, and their derivatives (*e.g.,* petroleum coke, bituminous coke, coal tar oil, refinery gas, synthetic fuel, heavy recycle, asphalts, blast furnace gas, recovered gaseous butane, and coke oven gas), as well as cellulosic biomass (*e.g.,* wood). We requested comment on whether there are other fuels that should be considered as traditional fuels and would fall within this grouping.

Comments: A few commenters suggested that bagasse should be included in the traditional fuel group because it is a valuable co-product which is fed directly from the mill to the boilers and has historically been the source of electrical power in communities located near the sugar cane mills. In addition, cellulosic biomass crops similar to bagasse (*e.g.,* energy cane and other fast growing grasses) grown specifically for fuel production, agricultural seeds, woody biomass, and wood collected from forest fire clearance activities, land clearing biomass, trees, unadulterated wood from pallets, and uncontaminated wood from disaster debris were suggested as materials that should qualify as traditional fuels. Last, several commenters argued that used oil, on-spec and off-spec, should be listed as traditional fuels. Since neither type of used oil is discarded, the presumption is that it is recycled.

EPA's Response: We agree with commenters that many of the materials mentioned in the comments should be classified as traditional fuels, which are not solid waste. However, to further add clarity, we are proposing that in order to qualify as a traditional fuel, cellulosic biomass must be "clean"—that is, must not be altered (either chemically or through some type of production process), such that it contains contaminants not normally associated with virgin biomass materials, to ensure that the material being burned does not introduce contaminants not normally associated with virgin biomass materials (we describe what we consider to be clean biomass in section VII.C.5.b). We believe clean biomass to include, but not necessarily be limited to: forest-derived biomass (*e.g.,* green wood; forest thinnings; clean and unadulterated bark; sawdust; trim; and tree harvesting residuals from logging and sawmill materials); corn stover and other biomass crops used specifically for energy production (*e.g.,* energy cane, other fast growing grasses); bagasse and other crop residues (*e.g.,* peanut shells, agricultural seeds); wood collected from forest fire clearance activities; trees and clean wood found in disaster debris; clean biomass from land clearing operations; and clean construction wood.

In regard to used oil, for the reasons discussed later in section VII.D.4, we are including on-spec used oil in the list of traditional fuels because we believe it meets our view of what is a traditional fuel (*i.e.,* fuels that have been historically managed as valuable fuel products rather than being managed as waste materials). However, off-spec used oil will be considered a solid waste, unless it is processed into a legitimate non-waste fuel, such as on-spec oil.

b. Biomass. Biomass includes a wide range of secondary materials which can be divided into two categories, cellulosic and non-cellulosic, as stated in the ANPRM.[25] While the ANPRM indicated that much of the biomass currently used as fuels are not solid waste since they have not been discarded in the first instance and are legitimate fuel products, we specifically requested comment on whether some biomass contains contaminants that are significantly higher in concentration when compared to traditional fuel products.

Comments: Cellulosic Biomass: For the cellulosic biomass category, several commenters argued that resinated wood products (*e.g.,* board trim, sander dust,

[25] In the ANPRM, we did not distinguish between "clean" cellulosic biomass and that which is not. Therefore, the comments discussed in this section are only in reference to cellulosic biomass that does not meet the definition of "clean."

panel trim) used to manufacture particleboard, medium density fiberboard, and hardboard are not discarded and are typically used on-site to either make composites or are used as fuel. One commenter stated that "[i]t is also important to note the quantity of formaldehyde actually present in these resonated wood fuels. It is minute. As the resins cure, virtually all of the formaldehyde in the adhesive is cross linked into polymers and no longer exists as formaldehyde. Current extraction tests on the highest formaldehyde content products show levels to be less than 0.02%, using the standard industry extraction test for formaldehyde from composites, EN 1203." Commenters also point out that formaldehyde is a common product of incomplete combustion, suggesting that trace amounts of formaldehyde would be present in the emissions irrespective of whether formaldehyde was present in the residuals. One commenter noted that incomplete combustion of virtually all organic materials produces carbon monoxide and formaldehyde. Commenters also stated that California rules on product emissions will shortly push those numbers below 0.01%, and cite several studies that indicate emissions from burning resinated wood residuals are not significantly different than burning wood absent the resinated materials.[26] Specific to panel trim, one commenter argued that emissions are not expected to be any different from those generated from unadulterated wood and traditional fuels like coal and oil that contain concentrations of part 261, Appendix VIII constituents that are orders of magnitude higher than in panel trim.

One commenter discussed the use of pulp and paper sludges as fuel. This commenter states that because these residuals are primarily composed of biomass, emissions from burning these materials are essentially the same as the emissions from burning other biomass fuels, such as bark or wood. The commenter cited a report that found that the burning of kraft pulp mill wastewater treatment residuals in bark boilers at levels below about 10 to 15 percent of total heat input is not expected to lead to an increase in any of the criteria or criteria-related pollutants, such as NO_X, SO_2, or VOC.[27] Further, the commenter states that a comparison of emission data for forty-eight organic compounds when burning wood residue and wood residue in combination with bleached kraft mill wastewater treatment residuals (around 12 percent of total heat input) in four wood-fired boilers showed no discernible differences in emissions of these organics when the residuals were co-fired. A similar comparison was conducted for metals, showing no discernable impact when burning these sludges.

Another commenter stated that treated wood (*e.g.,* pentachlorophenol, copper-based compounds, borate based compounds) also should be considered a fuel because it is not discarded and can be safely burned in boilers. In addition, commenters stated that creosote treated wood is a coal derivative and burning creosote would likely result in emissions no greater than burning coal. Creosote is a distilled and homogenous product that should burn more thoroughly than coal and is not burned in its pure form. Commenters also noted that creosote treated wood is a combination of two materials we listed as traditional fuels. For these reasons, it should qualify as a fuel. However, the same commenter noted that they would not be opposed to EPA requiring CCA lumber to be removed from the fuel stream.

EPA's Response: Cellulosic Biomass: We agree that certain biomass (cellulosic biomass that is "clean" and non-cellulosic biomass) materials can be legitimate fuels. We also generally agree with commenters that secondary materials, such as secondary mill residues (*i.e.,* residues such as sanderdust, board, trim and breakage from the manufacture of reconstituted wood/panel products) and pulp and paper mill residuals (*i.e.,* primary and secondary wastewater treatment sludges)[28] are likely legitimate fuels.

Regarding resinated wood products, we acknowledge that we have limited compositional data on these materials. As noted above, we did receive comments on the ANPRM concerning the contaminant data of these materials, specifically in regard to formaldehyde and emissions comparisons relative to burning wood that do not contain these resinated materials. Although emissions comparisons are not a direct indicator of whether these fuels satisfy the legitimacy criteria, we recognize that such data can be useful as an indicator of the contaminant levels in the secondary material fuels relative to traditional fuels. Based upon what limited data we do have regarding these materials, as well as comments received on the ANPRM, we have decided to classify resinated wood residuals as non-wastes for purposes of this proposed rule, if they are used as fuels within the control of the generator. (As we discuss in section VII.E of this preamble, the Agency is considering resinated wood residuals under the alternative approach as solid wastes when burned under the control of the generator for energy recovery, since as a matter of policy, the Agency may want to define a broader definition of solid waste.) Thus, given the general lack of data, we are requesting data and information both on the contaminant levels of these materials, as well as the appropriateness of categorizing them as non-wastes.[29] Based on the data and information the Agency receives, we may decide that such secondary materials are more appropriately defined as solid wastes.

We also acknowledge having limited data on pulp and paper sludges that are used as fuel. As noted above, we did receive comments on the ANPRM about contaminants associated with these secondary materials. Similar to resinated wood residuals, based on the limited data we have, we also have decided to classify pulp and paper sludges that are used as fuels within the control of the generator to be non-waste. (Like resinated wood residuals, the Agency also decided to classify pulp and paper sludges as solid wastes when burned under the control of the generator for energy recovery under the alternative approach being considered. *See* section VII.E.). Given the limited data we have, we also are requesting comment both on the contaminant levels of these materials, as well as the

[26] *See* U.S. EPA, "Wood Products in the Waste Stream: Characterization and Combustion Emissions, Vol. 1," November 1996. See also National Council for Air and Stream Improvement, Inc. Technical Bulletin (TB) 906, "Alternative Fuels Used in the Forest Products Industry: Their Composition and Impact on Emissions." September 2005.

[27] National Council for Air and Stream Improvement, Inc. Technical Bulletin (TB) 906, "Alternative Fuels Used in the Forest Products Industry: Their Composition and Impact on Emissions." September 2005.

[28] Primary sludges consist of wood fiber and inorganic materials and secondary sludges are primarily microbial biomass.

[29] It is worth noting that, in response to a request from EPA's Office of Air and Radiation (OAR), EPA's National Center for Environmental Assessment (NCEA) initiated an update of the formaldehyde IRIS assessment to address significant new scientific information that had become available on formaldehyde. EPA anticipates deriving an inhalation reference concentration (RfC) and reexamining the inhalation cancer assessment as part of this update. The draft assessment has been reviewed by scientists and managers within NCEA and across EPA. EPA will release a draft for public comment and independent expert scientific peer review, with a National Academy of Sciences (NAS) panel review expected to commence in late April 2010, which will coincide with a formal public comment process through the **Federal Register**.

appropriateness of categorizing them as non-wastes, and may decide based on the comments received to classify pulp and paper sludges as solid waste when burned under the control of the generator in a combustion unit for energy recovery when the rule is promulgated.

Although limited information was submitted in regard to painted wood or pentachlorophenol, copper-based and borate-based compound treated wood materials and their contaminant concentrations, we believe these secondary materials contain elevated levels of contaminants relative to traditional fuels, and thus do not meet legitimacy criteria and should be considered solid waste if burned in a combustion unit. (It should also be noted that to the extent that any of these treated wood materials are identified as a hazardous waste, it would not be eligible to be burned in a non-hazardous waste combustion unit.) In regard to creosote treated lumber, we believe there is still a fair amount of uncertainty associated with the level of contaminants (*e.g.,* levels of polycyclic aromatic hydrocarbons present in creosote) in comparison to traditional fuels. We, therefore, are requesting that commenters provide additional data on contaminant levels associated with these non-hazardous secondary materials relative to traditional fuels that are in use today as fuels.

Comments: Non-cellulosic Biomass: One commenter stated that animal manure should not be categorically excluded from the definition of solid waste because it is inherently waste-like, is discarded, and does not meet the legitimacy criteria for "handled as a valuable commodity." The commenter stated that manure generated in concentrated Animal Feeding Operation (CAFO) are known to contain heavy metals, halogens, dioxins, etc. Manure from CAFOs are discarded in two ways after it is collected: some manure is recycled for land application (*e.g.,* "used in a manner constituting disposal") and excess manure is simply disposed.

The same commenter acknowledged that manure can be recycled for use as bioenergy, but cautioned that it should not automatically be exempt from the definition of solid waste. In support of its position that manure recycled into bioenergy and used as fuel is still a solid waste, the commenter cites the regulations at 40 CFR 261.2(e)(2)(ii), which lists materials burned for energy recovery, used to produce a fuel, or contained fuels among materials that are solid wastes, even if recycling of those materials involves use, reuse, or return to the original process. Overall, the commenter is concerned with the large volumes of animal manure currently being generated at animal feeding operations and the lack of oversight at recycling facilities to ensure that recovery is immediate and happens without releasing any pollutants into the environment. Based on the commenter's observations, current regulations (*i.e.* the 2008 CAFO NPDES Rule) still are not sufficient to assure that CAFO operations will meet the two benchmarks of immediacy and environmental care that define a "valuable commodity." They conclude that for manure to be excluded from the definition of solid waste, it should have to meet numerous qualifying conditions to show that the manure is being recycled.

EPA's Response: Non-cellulosic Biomass: Because the focus of this rulemaking is to determine which non-hazardous secondary materials are or are not solid waste when burned as a fuel or ingredient in combustion units (not when utilized for other purposes, such as land application), we are not making any determination that manure is a solid waste for other possible beneficial end uses. Such beneficial use determinations are generally made by the states for these other end uses, and EPA will continue to look to the states to make such determinations.

With respect to whether manure is a legitimate non-waste fuel, EPA recognizes that manure has been used previously as a fuel, and is currently used as a fuel source in other countries. In fact, some commenters have argued that manure should be considered a traditional fuel, and if not, should at least be considered a non-waste fuel since they believe that manure meets the legitimacy criteria. While we appreciate the information submitted in the comments, we lack data sufficient to evaluate the legitimacy criteria for manure. Therefore, we request information and data on how manure is handled from its point of generation to the point it is used as a fuel, in order that EPA can determine whether manure would meet this legitimacy criterion.

In addition, EPA has limited data on the contaminant concentrations and Btu value of manure to determine whether it would meet these legitimacy criteria. Therefore, we are requesting that commenters provide additional information and data on the extent to which manure (including materials, such as chicken litter) is currently used as a fuel, as well as data to support whether these materials meet our legitimacy criteria, including the contaminant levels—that is, they contain contaminants at levels comparable to traditional fuels and heating content of the various types of manure.[30] We will evaluate the information submitted during the public comment period and will discuss our determination in the final rule.

On the other hand, if manure is processed into biofuels, by, for example, anaerobic digesters such biofuels would be considered a legitimate non-waste fuel that has been processed from a non-hazardous secondary material provided "the biofuel" meets the legitimacy criteria—that is, managed as a valuable commodity, has a meaningful heating value and contains contaminants at levels that are comparable to traditional fuel. We again acknowledge, however, that we have limited data (such as how the biofuels are managed, once generated, contaminant concentrations and Btu value) on biofuels that are produced from animal manures, and request that commenters provide additional data on the extent to which manures are currently processed into biofuels, as well as data to support whether these materials meet our legitimacy criteria, including contaminant levels and heating content.

c. Used Tires. We discussed in the ANPRM that tires used as legitimate alternative fuels can be categorized as a non-waste fuel if they have not been previously discarded (*i.e.,* if the used tires have not been abandoned and thrown away). The ANPRM further stated that used tires collected and managed pursuant to a state tire oversight program, are not considered to be discarded. The ANPRM also explained that discarded used tires that have been processed to make a legitimate fuel product (such as TDF) would not be a solid waste. Furthermore, we requested comment on whether used tires that fall within the category of secondary materials that are discarded, but can be directly used as a legitimate fuel or ingredient without processing because they are indistinguishable in all relevant aspects from a fuel or ingredient product (e g., whole tires) should not be considered a solid waste.

[30] Based on data provided to EPA by USDA, research conducted by the Texas Agricultural Experiment Station and the Texas Cooperative Extension shows that manure has a dry, ash free heating value of 8,500 Btu/lb, while other research demonstrates the energy value of manure (as received) to be much lower (between 2,710–5,764 Btu/lb). For more information, please refer to the background paper entitled, "USDA Response to EPA's Belief that Manure that is Burned as a Fuel is a Solid Waste," which is located in the docket for today's rule.

Comments: Other than the states,[31] commenters generally agreed with the approach outlined in the ANPRM. Commenters did not agree, however, that whole tires taken from waste tire piles, but not processed, should be considered solid wastes. Several commenters responded that tires should be excluded from the definition of solid waste irrespective of where they are generated, including from waste tire piles. Along the same lines, some commenters argued that regardless of the source, scrap tires are indistinguishable from one another in terms of fuel/Btu value and air emissions and that the only distinction is whether they have been previously discarded. Others stated that extraction and reclamation from a waste tire pile should be sufficient processing to classify a tire as a legitimate non-waste fuel.

EPA's Response: As discussed in section VII.D.2, we now believe that whole used tires (even if collected from tire dealerships and automotive shops and overseen by a state tire collection oversight program) are initially abandoned and thus meet the plain meaning of discard. As a result, whole used tires that are not processed into a legitimate fuel or ingredient (*e.g.,* shredded/chipped with steel belts removed) would be considered a solid waste. We acknowledge that whole tires can be legitimately burned as fuel, but because they have been discarded, whole tires would be considered solid wastes and subject to the CAA section 129 requirements unless processed into a non-waste fuel product. *See* section VII.D.2 for a more detailed discussion on why we now consider whole used tires to have been discarded by the original owner.

We are also proposing a process by which a facility or person can apply for a non-waste determination for secondary materials that are not managed within the control of the generator. As outlined in section VII.D.5, the purpose of the petition process is to recognize that some non-hazardous secondary materials may remain outside the control of the generator and not be processed into a fuel product, but still be a legitimate non-waste fuel product. As part of this petition, the facility must demonstrate that the secondary material has not been discarded in the first instance.[32]

We also are requesting comment on whether discarded materials, such as used tires that have been abandoned and disposed of in waste tire piles and have not been processed (as defined in this proposal), should not be considered solid wastes if they meet the legitimacy criteria and are indistinguishable in all relevant aspects from a product or intermediate.

d. Used Oil. As indicated in the ANPRM, we consider off-specification (or "off-spec") used oil that is collected from repair shops to have been discarded. Used oil that meets the on-specification (or "on-spec") levels and properties of 40 CFR 279.11 is considered be a legitimate non-waste fuel product. We requested comment on whether off-spec used oil managed pursuant to the 40 CFR part 279 used oil management standards and which is burned for energy recovery in certain types of combustion devices[33] should be considered a legitimate non-waste fuel.

Comments: Most commenters believe that off-spec (and on-spec) used oil should not be classified as a solid waste. Various reasons were provided in support. Specifically, one commenter reasoned that off-spec used oil should not be treated as a solid waste if it has been delivered to a legitimate recycler for processing. Designation as a solid waste would lead to costly burning in hazardous waste incinerators, burning in uncontrolled space heaters, and more undesirable disposal methods. Many commenters also referred to Congress' intent to manage used oil differently and EPA's regulatory structure for the management of used oil as evidence that used oil should not be classified as a solid waste. They added that used oil is typically neither disposed of, thrown away, nor abandoned, but is collected and contained. Used oil is a valuable product that is subject to EPA's recycling presumption. Btu content is not necessarily lower than on-spec used oil or virgin fuel, and contaminants, such as water, flashpoint, and metals can be effectively addressed. In a similar, but slightly different view, a number of commenters argued that on-spec and off-spec used oil should be included in the list of traditional fuels. Since neither is discarded, the presumption is that it is recycled. Only one commenter thought that off-spec used oil should continue to be considered a solid waste within the RCRA framework.

EPA's Response: We agree with the commenters who said that on-spec used oil should not be classified as a solid waste. Based upon how we define traditional fuels (*i.e.* fuels that have been historically managed as valuable fuel products rather than being managed as waste materials), we believe that on-spec used oil should be considered a traditional fuel. In accordance with 40 CFR part 279, once used oil is determined to be on-spec, it is no longer regulated under the used oil management standards.[34] Used oil that has been determined to be on-spec has verified that it contains contaminants at levels below the maximum concentration limits established in the standards, such that the emissions resulting from the burning of on-spec used oil will not pose an increased threat to human health or the environment than the emissions resulting from the burning of virgin oil or diesel. This is because the contaminants of concern (*i.e.,* those for which maximum concentration levels have been set) present in on-spec used oil are either at the same concentration or a lower concentration than virgin refined fuel oil.[35]

This approach is supported by *Safe Food and Fertilizer* v. *EPA,* 350 F.3d 1263 (DC Cir. 2003). The decision upheld an EPA rule that excluded from the definition of solid waste certain recycled materials used to make zinc fertilizers (and the fertilizers themselves) as long as they were not speculatively accumulated, met certain handling, storage and reporting conditions, and were "identical" to fertilizers made from raw materials, *i.e.,* they had concentration levels for certain chemicals that fall below specified thresholds. 350 F.3d at 1265. We believe on-spec used oil satisfies these criteria.

In regard to off-spec used oil, we disagree that it should not be classified as a solid waste. The used oil regulations are structured such that off-spec used oil is managed within the constraints of the used oil management

[31] For a discussion of state comments regarding used tires, *see* section VII.C.1., "Comments from State Agencies."

[32] The petition process for a non-waste determination would also require the petitioner to describe how the non-hazardous secondary material satisfies the criteria outlined in the petition process, which includes whether it meets the legitimacy criteria.

[33] Devises include industrial boilers located at facilities that are engaged in a manufacturing process where substances are transformed into new products, utility boilers used to produce electric power, steam, heated or cooled air or other gases or fluids for sale, used oil fired space heaters provided the burner meets the provisions of 40 CFR 279.23, and hazardous waste incinerators subject to regulation under 40 CFR subpart O of parts 264 and 265.

[34] Once used oil is claimed to be on-spec and the marketer complies with the requirements for analysis and record retention, notification, and record tracking shipment to on-specification burners, it is no longer subject to other management standards. We note that today's proposed rule does not change any of the regulations in place that regulate on-spec used oil.

[35] *See* Used Oil Final Rule, 50 FR 49181 (November 29, 1985).

standards until it is processed into on-spec used oil or it is properly disposed of. It may only be burned in specific types of combustion devices.[36] Although off-spec used oil may be managed within the control of the generator, it contains contaminants at levels that are not comparable to traditional fuels, and thus would not be considered a legitimate non-waste fuel per the legitimacy criteria. Therefore, today's proposed rule considers off-spec used oil as a solid waste subject to the CAA section 129 requirements, as wells as state, and local requirements, unless it is processed to meet the on-spec used oil limits specified in 40 CFR 279.11.

It also should be noted that off-spec used oil may be burned in used oil-fired space heaters pursuant to 40 CFR part 279, provided: (1) The heater burns only used oil that the owner or operator generates or used oil received from household do-it-yourself used oil generators; (2) the heater is designed to have a maximum capacity of not more than 0.5 million Btu per hour; and (3) the combustion gases from the heater are vented to the ambient air. The RCRA used oil regulations base this provision on a finding that uncontrolled emissions from these sources do not pose a significant threat to human health and the environment.[37] However, consistent with our determination that off-spec used oil be considered a solid waste when burned as a fuel, we believe that off-spec used oil managed within the control of the generator would not qualify for the generator controlled exclusion when burned in a used oil fired-space heater, since contaminant levels are not comparable to traditional fuels. Therefore, we are proposing that off-spec used oil combusted at a unit that is within the control of the generator would be solid waste. We request comment on this approach, as well as any supporting information.

e. Coal Refuse/Coal Combustion Residuals. The ANPRM identified coal refuse (*i.e.,* mining rejects and recovered landfilled ash) as a solid waste because it has been discarded and has not been subsequently processed for use as a fuel. We solicited comment on whether there are circumstances under which these materials have been discarded, but not processed, and can be considered as non-waste fuels once they are removed or recovered from the "discard" environment and managed as legitimate fuels.

Comments: Several commenters responded that coal refuse should not be classified as a solid waste. One commenter argued that there is no basis for continuing to classify an alternative fuel or ingredient as a solid waste merely because it does not have to undergo some type of processing before being used. The same commenter also indicated that the recovery of ash and mill rejects from disposal sites all involve some degree of processing. The materials have to be excavated, stored, and transported to their designated uses where they are also often subject to the same types of processing activities that are associated with the mining and management of virgin coal (*i.e.,* screening, sizing, and chemical analysis to identify Btu, ash characteristics and sulfur content). Given the significant costs associated with the extraction of these materials, including excavation and handling, as well as the nearly identical nature of these materials to traditional fuels and ingredients, the extraction operations themselves constitute the requisite degree of processing necessary to be viewed as a non-waste. One commenter stated that they were aware of one electric utility that in the past recovered high-carbon content ash from a disposal facility that it owns, and used the ash as a fuel source by supplementing the coal used in one of their utility boilers. The same company today takes high-carbon fly and bottom ash directly from several existing boiler units and burns it at their power generating station. This commenter noted that there are at least four patented processes for removing unwanted carbon from fly ash that allow the processed ash to produce both technically compliant fly ash for use in concrete and a separate carbon stream that can be re-introduced into the boiler for its fuel value.

One commenter contended that coal refuse is a solid waste due to its toxicity levels in comparison to normal coal. Specifically, waste coals can have up to four times more mercury and chromium, and three times more lead than other coals.

EPA's Response: As discussed in the Material Characterization Paper developed for this rulemaking, large volumes of coal refuse piles were accumulated at mining sites from the time mining first began in the Appalachians through the late 1970s. Beginning in the late 1970s, laws were enacted that, for the first time, required stabilization and reclamation of mining sites, including coal refuse disposal piles and fills. Current mining operations continue to generate the material, though likely at lower rates than in previous decades.

For purposes of this proposal, we are therefore differentiating between coal refuse that was generated in the past and placed into "legacy" piles, and the current generation of coal refuse. Legacy piles of coal refuse would clearly be considered to be disposed of and abandoned, thus meeting the definition of a solid waste material. We would not consider currently generated coal refuse to be abandoned or disposed of and, therefore, would not be considered a solid waste.

With regard to coal refuse from legacy piles, the processing of coal refuse for use as a fuel or ingredient involves separation through the use of screens or grizzlies, blending, crushing, and some drying. Although we understand that virgin coal is similarly processed, we believe that such operations would constitute "minimal processing" and would not meet the processing definition as proposed. *See* section VII.D.4 for a discussion of what does and does not constitute "processing" as defined in this proposal. Therefore, because coal refuse from legacy piles has been discarded and does not undergo a sufficient level of processing, it is considered a solid waste and would be subject to the CAA 129 requirements if burned in a combustion unit.

We note that one commenter contended that coal refuse contained elevated levels of mercury, chromium, and lead when compared to other coals. We recognize that available data show that coal refuse generally has higher metals concentrations than non-refuse coal concentrations. Although coal refuse can contain metals concentrations that are higher than found in virgin coal, data also show that emissions levels from some facilities burning coal refuse (namely those equipped with circulating fluidized beds (CFBs)) are lower than most existing pulverized coal utility boilers.[38] For the purposes of this proposal, however, it is not necessary to discuss whether coal refuse from legacy piles

[36] These devices, listed in 40 CFR 279.61, were determined to not pose significant health risks when burning off-spec used oil because they typically are equipped with particulate control equipment (as required by CAA permits). Nonindustrial boilers (*e.g.,* those located in apartment and office buildings, schools, and hospitals), on the other hand, were found to pose significant risk when off-spec used oil is burned because they are typically very small and may not achieve complete combustion and do not have any emission control equipment.

[37] Used Oil Final Rule, 50 FR 49194 (November 29, 1985).

[38] CFBs ability to achieve lower emissions levels is due to several factors: (1) CFB boilers are often newer than many existing pulverized coal utility boilers and may be equipped with better particulate matter (PM) controls; (2) CFBs utilize lower operating temperatures, which result in lower metal and NO_X emissions; and (3) CFB boilers often add limestone to their feed to control SO_2 emissions, which results in greater metal fixation to the ash.

satisfies the contaminant requirement of the legitimacy criteria, given that we believe that such coal refuse is a solid waste because it is discarded and is not sufficiently processed into a fuel product.

We are also differentiating between mined landfilled ash, which generally refers to landfilled coal ash, from coal refuse, which we generally characterize as coal mining rejects that have been placed in waste piles (known as gob or culm, for example).[39] Coal combustion residuals (CCRs) that have been discarded in the first instance (*e.g.,* coal ash mined from landfills) would be considered solid waste unless they are processed into legitimate non-waste fuel products. It appears that the patented processes described by the commenter that separates carbon from the fly ash to produce a fuel would satisfy the processing requirement included in this proposal. However, until the Agency has additional information, we are not in a position to indicate that such processing is sufficient to produce a non-waste fuel. Therefore, we are requesting that commenters provide additional information explaining how this processing is conducted, and the extent to which these high carbon fuels are produced nationwide. With respect to high-carbon fly and bottom ash taken directly from existing boiler units and burned at power generating stations, we believe that such secondary materials are not discarded and would not be considered a solid waste if it was managed within the control of the generator and satisfies the fuel legitimacy criteria.

Regarding the commenter that indicated coal fly ash and mill rejects are often subjected to the same types of processing activities that are associated with the mining and management of virgin coal (*i.e.,* screening, sizing, and chemical analysis to identify Btu, ash characteristics and sulfur content), we believe that screening, sizing, and chemical analysis constitutes a minimal level of processing, and would not satisfy the processing requirement of this proposal. Although we recognize that sizing of materials is an important processing step for fuels in order to improve combustion efficiency, we believe this represents an inadequate level of processing to change a discarded material into a product fuel and, therefore, these materials would be considered solid wastes under today's proposal. However, we request that commenters provide additional information on the extent to which CCRs are recovered from the discard environment (*e.g.,* landfills) and used as fuels. We also request that commenters provide more detailed information on how these secondary materials are processed, and whether these materials might satisfy the legitimacy criteria for fuels.

f. Sewage Sludge. Sewage sludge or "wastewater treatment sludge" as referred to in the ANPRM, was one of several non-hazardous secondary materials that we solicited comment as to whether it is a legitimate alternative fuel and thus would not be solid waste if it has not been previously discarded.

Comments: All commenters who addressed this issue argued that sewage sludge should not be classified as a solid waste. One commenter specifically pointed to the RCRA statutory definition of solid waste, stating that Congress expressly exempts solid and dissolved materials in domestic sewage processed at Publicly Owned Treatment Works (POTWs). Rather, sewage sludge should be regulated comprehensively under the Clean Water Act (CWA), or to the extent necessary to meet CAA obligations, EPA should regulate the combustion of POTW sewage sludge under CAA section 112. Additionally, it was put forth that if the Agency disagreed with the assertion that the RCRA statute requires the Agency to exempt sewage sludge from the definition of solid waste, that the Agency provide a regulatory exclusion for sewage sludge burned in incinerators in order to preserve the current framework for regulating sewage sludge managed under section 405 of the CWA to avoid redundancy. This commenter was also concerned about the implications a determination that sewage sludge is solid waste when incinerated would have on how states regulate sewage sludge managed for different purposes (*e.g.,* land application).

Two commenters stated that sewage sludge meets all three legitimacy criteria for fuels. It is handled as a valuable commodity by virtue of it being continuously dewatered and directly injected into the incinerator; it is not diverted or stored and every effort is made to maximize the quantity of sludge to be combusted. One commenter stated these materials have meaningful heating value, given that it recovers a net energy value of 4,300,000 Btus/hour of useable thermal energy from its combustion. Also, the CWA section 405 regulations provide risk-based limits for contaminants when incinerated, such that as long as the contaminant level is below the limits, it does not pose a significant health risk.

EPA's Response: We agree with commenters that the RCRA statutory definition of solid waste excludes the solid or dissolved material in domestic sewage. This is evidenced by the RCRA hazardous waste regulations that extend this exclusion to mixtures of hazardous waste with domestic sewage, provided that the mixture occurs in a pipeline en route to a POTW. *See* 40 CFR 261.4(a)(1). However, we do not agree with the commenters that the Domestic Sewage Exemption (DSE) applies to the sludge generated from the treatment process and thus, sewage sludge is a solid waste if it is discarded.[40] We believe that sewage sludge burned without energy recovery (*i.e.,* burned for destruction) in an incinerator is discarded, and thus a solid waste. Further, the Agency is not proposing to provide a regulatory solid waste exclusion for sewage sludge burned in incinerators that would preserve the current framework for regulating sewage sludge managed under section 405 of the CWA to avoid redundancy. However, we request comment on whether such an approach is within our discretion. Regarding the commenter's concerns about possible impacts on how states regulate sewage sludge managed for different purposes (*e.g.,* land application), as discussed in more detail in Section VIII, through this rulemaking, EPA is articulating the narrow definition of which non-hazardous secondary materials are or are not solid waste when used as fuel for energy recovery or as ingredients in combustion units. We are not making solid waste determinations that cover other possible secondary material end uses. In EPA's view, these regulations should have no effect on state programs that choose to regulate this material in different ways and under different authorities.

Two commenters indicated that many POTWs recover energy in the form of usable heat from the incineration of sewage sludge via waste heat boilers. Although waste heat boilers are useful devices for providing energy in the form of steam for secondary processes, the Agency does not regard them as legitimate energy recovery devices because they receive their energy input

[39] The ANPRM included landfill ash in its description of coal refuse.

[40] EPA has long viewed sewage sludge generated from POTWs as a solid waste, beginning with the 1980 Identification and Listing of Hazardous Waste rulemaking. In this final rule, EPA stated that the DSE is "only applicable to non-domestic wastes that mix with sanitary waste in a sewer system leading to a POTW." *See* 45 FR 33097 (May 19, 1980). In the same rule, EPA further said it decided not to exclude sewage sludge from regulation under RCRA, since the statutory expressions regarding the definitions of "solid waste" and "sludge" was clear. (*See* 45 FR 33101).

from the combustion of off-gases via a separate combustion chamber. Under the RCRA program, a legitimate energy recovery device is one that meets the definition of a boiler or an industrial furnace (*see* 40 CFR 260.10). Among other criteria, a boiler's combustion chamber and primary energy recovery section(s) must be of integral design, unless it falls under the process heater or fluidized bed combustion exemption. Thus, a combustion chamber that is connected by a duct to a waste heat boiler (or recuperator/heat exchanger) does not qualify as a legitimate energy recovery device. The CAA program views waste heat recovery units (*i.e.,* external to the combustion chamber) similarly. Waste heat recovery units are designed to cool the exhaust gas stream, and/or to recover, indirectly, the useful heat remaining in the exhaust gas from a combustion unit that has some other primary purpose (such as an institutional waste incinerator). The presence of a waste heat recovery unit on the exhaust gas does not change the fact that the unit combusting the secondary material is primarily an incineration unit burning waste for disposal purposes. *See* Other Solid Waste Incinerators (OSWI) final rule at 70 FR 74870 at 74876, (December 16, 2005). Therefore, sewage sludge burned in a waste heat recovery unit would not satisfy the meaningful heating value legitimacy criteria and would thus be considered to be burning solid waste (for more discussion on the legitimacy criteria, *see* section VII.D.6).

The Agency also notes that data generally shows that municipal sewage sludge contains metals that are typically higher in concentrations when compared to traditional fuels (*e.g.,* coal and fuel oil). *See* the table below for a comparison of the concentration of certain toxics of municipal wastewater treatment sludges to coal.

COMPARISON OF TOXICS OF MUNICIPAL WASTEWATER TREATMENT SLUDGES TO TRADITIONAL FUELS [41]

Element	Sewage sludge		Coal (mg/kg)
	40-City study (mg/kg dry weight)	National sewage sludge study (mg/kg dry weight)	
Arsenic	9.9	6.7	10
Cadmium	69	6.9	0.5
Chromium	429	119	20
Copper	602	741	Not available.
Lead	369	134.4	40
Mercury	2.8	5.2	0.1
Molybdenum	17.7	9.2	Not available.
Nickel	135.1	42.7	20
Selenium	7.3	5.2	1
Zinc	1,594	1,202	Not available.

Sewage sludge findings in this table are for final sludge which is defined as the liquid, solid, or semi-solid residue generated during the treatment of domestic sewage in a treatment works, receiving secondary treatment or better, and which may include sewage sludge processed to meet the land application standards.

As such, the Agency does not believe that sewage sludge would meet the legitimacy criteria for contaminants. Therefore, the Agency is proposing that sewage sludge, generated from POTWs and when combusted, be classified as a solid waste, and subject to the CAA Section 129 requirements.

6. Comments on Specific Materials Used as Ingredients

The ANPRM identified a number of non-hazardous secondary materials that we believe are currently being used as ingredients in combustion processes (*i.e.,* blast furnace slag; CKD; coal combustion residual group (fly ash, bottom ash, and boiler slag); foundry sand; silica fume; and secondary glass material). The ANPRM solicited comment on whether or not these non-hazardous secondary materials are legitimate ingredients per the legitimacy criteria, and requested additional data and/or information supporting whether these secondary materials are legitimate ingredients. The majority of comments submitted were in regard to: CKD, CCRs, foundry sand, and blast furnace slag/steel slag.

a. Cement Kiln Dust. For CKD, the ANPRM indicated that CKD is not a solid waste if it is recycled within the continuous clinker production process.

Comments: One commenter responded that they strongly support this view, but that other CKD which may be available could be useful if industry could find a means to incorporate this viable ingredient into the process. Thus, they believe that any EPA interpretation regarding the use of CKD must allow for access of the material irrespective of where the ingredient is maintained prior to use.

EPA's Response: As explained in section VII.D.3, we are proposing that non-hazardous secondary materials used as ingredients in combustion units that are not discarded in the first instance would not be considered a solid waste provided they satisfy the legitimacy criteria for ingredients (discussed in section VII.D.6.b). This proposal does not assume that ingredients used in combustion units that are not managed within the control of the generator are discarded materials (as is the case for non-hazardous secondary material fuels) since we believe that non-hazardous secondary materials used as ingredients in manufacturing processes, such as cement kilns are commodities managed within continuous commerce and are used as an integral part of the manufacturing process. That is, secondary materials that are directly used (or in the case of previously used materials, reused), function as raw materials in normal manufacturing operations or as products in normal commercial applications, and thus, EPA has interpreted the definition of solid waste as excluding secondary materials recycled in ways that most closely resemble normal production processes.

With respect to the comment that our interpretation regarding the use of CKD must allow for access of the material irrespective of where the ingredient is maintained prior to use, it is not clear what point the commenter is making. To the extent that the CKD has not been

[41] More information on the composition of municipal wastewater treatment sludges can be found in the Materials Characterization Paper on Wastewater Treatment Sludge, which has been placed in the docket for today's proposed rule.

discarded in the first place, we are proposing that the use of CKD in a cement kiln would not be considered a solid waste whether it remains under the control of the generator or is transferred to another person, so long as it meets the legitimacy criteria. However, if CKD has been discarded, its use as an ingredient in the cement kiln would be considered combustion of a solid waste, (and the cement kiln would be subject to the CAA section 129 requirements), unless it has been processed (as defined in section VII.D.4) to produce a non-waste ingredient.

b. Coal Combustion Residuals. The ANPRM identified what was considered to comprise the CCR group: Fly ash, bottom ash, and boiler slag. Similar to CKD, it was stated that coal fly ash that is handled as a commodity within continuous commerce when it is marketed to cement kilns as an alternative ingredient is not discarded. Under the ANPRM approach, if the CCR product was previously discarded, such non-hazardous secondary materials would be solid wastes, unless they were processed into a legitimate ingredient product. However, we solicited comment on the situation where a discarded material is recovered from the environment and directly used as an ingredient (*i.e.* without processing). Additionally, we solicited comment on the extent to which non-hazardous secondary materials that have already been discarded (*e.g.,* coal fly ash that has been landfilled) are later processed and used as ingredients in combustion units, as well as requested descriptions of the types of processing that these secondary materials undergo.

Comments: Several commenters believe CCRs can be either legitimate fuels or ingredients when used in a combustion unit. One commenter stated that there are a number of cement kilns that use or have used high carbon fly ash as a fuel and ingredient. As an ingredient, the constituents within the fly ash are similar to those required from natural materials (such as shale, marl or limestone) in that they contain fractions of silica, iron and aluminum needed in the kiln. As a fuel, the relatively high carbon content imparts energy through its combustion, reducing the need for some portion of fossil or other fuels for the kiln.

EPA's Response: As discussed above (and as further discussed in Section VII.D.6.b), we are proposing that non-hazardous secondary materials used as ingredients in combustion units that are not discarded in the first instance would not be considered a solid waste provided they satisfy the legitimacy criteria for ingredients. Commenters point out that CCRs can serve both as ingredients, as well as fuel supplements. This raises the question of whether these types of secondary materials should be treated like non-hazardous secondary materials used as fuels (where we assume they are discarded if they are managed outside the control of the generator), as opposed to ingredients (in which case they are not solid waste even if they are managed outside the control of the generator provided they satisfy the legitimacy criteria and have not been discarded in the first instance). It also raises the question as to whether these materials should be required to satisfy the legitimacy criteria for fuels or for ingredients, or both. We do not believe it would be appropriate to require these types of secondary materials to satisfy the criteria of both fuels and ingredients. As a result, we are proposing that the decision to treat them as fuels or ingredients should be based on the primary purpose of using the non-hazardous secondary material in the cement kiln. With respect to CCRs, we believe the primary purpose of their use is as an ingredient; thus, provided the CCRs satisfy the legitimacy criteria for ingredients and are not discarded in the first instance, they would not be considered solid waste.[42] However, we specifically solicit comment on this point, and in particular, whether the use of CCRs is primarily used for their ingredient value as opposed for their fuel value.

Comment: With respect to the extent that CCRs have been discarded, but are later processed, one commenter noted that there are at least four patented processes for removing unwanted carbon from fly ash that would allow the processed ash to produce both technically compliant fly ash for use in concrete and a separate carbon stream that can be re-introduced into the boiler for fuel value. Another commenter stated that coal fly ash (and mill rejects) recovered from disposal sites all involve some degree of processing, in that the materials have to be excavated, stored, and transported to their designated uses. The materials are also often subject to the same types of processing activities that are associated with the mining and management of virgin coal (*i.e.,* screening, sizing, and chemical analysis to identify Btu, ash characteristics and sulfur content). Finally, one commenter disagreed with our position on CCRs. The commenter believes that CCRs are wastes due to their high concentration of contaminants, predominantly mercury.

EPA's Response: In regard to when a discarded material is recovered from the environment and directly used as a fuel or ingredient, we are proposing that the secondary material is a solid waste, unless it undergoes a sufficient level of processing to produce a legitimate fuel product or ingredient. As discussed in detail in section VII.D.4, when a non-hazardous secondary material has been discarded, unless sufficient processing occurs to change the material to produce a legitimate fuel product or ingredient, it would remain a solid waste under this proposal. However, we are also requesting comment on whether such non-hazardous secondary materials that have been discarded and shown to be a legitimate fuel or ingredient product, should nevertheless be considered a legitimate non-waste fuel or ingredient, even if the non-hazardous secondary material does not undergo processing at all or an adequate amount of processing.

As previously described for processed CCR's that are used as fuels, it appears that the patented processes described by the commenter that separates carbon from the fly ash to produce technically compliant fly ash for use in concrete would satisfy the processing requirement included in this proposal; however, we are requesting that commenters provide additional information explaining how this processing is conducted, and whether this type of fly ash is used as an ingredient in the clinker production process.

Regarding the commenter that indicated that coal fly ash and mill rejects are often subject to the same types of processing activities that are associated with the mining and management of virgin coal (*i.e.,* screening, sizing, and chemical analysis to identify Btu, ash characteristics and sulfur content), we do not believe that screening, sizing, and chemical analysis by itself is a sufficient level of processing that would render a discarded material into a non-waste ingredient product. As we noted previously in Section VII.C.5.e., while we recognize that screening, sizing, and chemical analysis can be important for producing traditional fuels, we also are proposing that such processing is not sufficient to change a waste-derived fuel into a product fuel. Thus, such secondary materials that undergo such minimal processing are still considered waste-derived fuels because such processing of CCRs, even with screening and chemical analyses, would not be

[42] We note that used tires provide both fuel value and ingredient value in cement kilns. In this instance, however, we believe the primary purpose of using tires in a cement kiln is to recover their energy value, and therefore believe tires should satisfy the fuel criteria in determining whether the materials are discarded and legitimate.

sufficient to produce a non-waste ingredient. However, we request that commenters provide additional information as to the extent to which CCRs are recovered from the discard environment (*e.g.,* landfills) and used as ingredients in cement kilns, and if so, we request commenters provide more detailed information on the extent to which these CCRs are processed, and thus, might satisfy our proposed definition of processing in section VII.D.4.

In addressing the commenter who argued that CCRs are solid wastes due to their high concentration of contaminants, we begin by noting that the chemical properties of CCRs are influenced to a great extent by those of the coal burned, the type of combustion unit, and the air pollution controls applied.[43] We are also aware that fly ash may contain various levels of metals, such as vanadium, zinc, copper, chromium, nickel, lead, arsenic, and mercury.[44] However, in a recent Report to Congress that addressed the use of these secondary materials as ingredients in cement and concrete applications, the overall conclusion reached with respect to the perceived safety health risk barriers was a positive one, in that the risk analyses did not identify significant risks to human health and the environment associated with these uses.[45]

The Report to Congress also identifies several industry stakeholders and state agencies that have recognized that regulatory programs for the control of mercury and NO_X in electric utility air emissions (and the necessary new emission control technologies and configurations necessary to achieve emissions reductions) can potentially result in increased carbon levels in coal fly ash that impact the ability to use the ash as a supplementary cementitious material.[46] Consequently, EPA is studying the possible effects of new air emission control technologies and configurations on the composition of CCRs and publishing its findings in a series of reports.[47] Thus, we request comment on whether advanced emission control technologies, such as carbon control technologies for mercury and NO_X, are resulting or will result in increased levels of contaminants in coal ash to the extent that coal ash would not satisfy our legitimacy criteria.

c. Foundry Sand. Similar to the previously discussed ingredients, we requested data and/or information supporting whether foundry sand is discarded and if not discarded, whether it meets the legitimacy criteria.

Comment: One commenter responded and stated that foundry sand meets all four legitimacy criteria for ingredients. The commenter offered several examples of applications for foundry sand in support of why it should not be a solid waste; however, very little information was provided in the context of utilizing foundry sand as an ingredient in a combustion process.

EPA's Response: Since this proposal is limited to those situations where the non-hazardous secondary material is used as a fuel or ingredient in a combustion process, examples of using foundry sand in other applications is not directly relevant. However, as previously explained, we are proposing that non-hazardous secondary materials used as ingredients in combustion units that are not discarded in the first instance would not be considered a solid waste provided they satisfy the legitimacy criteria for ingredients (discussed in section VII.D.6.b).

d. Blast Furnace Slag/Steel Slag. The ANPRM also requested data and/or information regarding blast furnace slag and steel slag and their use as legitimate ingredients and thus, whether they are or are not considered solid waste.

Comments: Two commenters responded that steelmaking slag and mill scale should be excluded from the definition of solid waste because they meet all four legitimacy criteria for ingredients. With respect to our solicitation for comment on when a material is previously discarded and has been processed into a legitimate ingredient product, one commenter responded that current practice to obtain these materials requires the procurement of a mining license and operating practices that are similar to processing of natural aggregates (though drilling and blasting practices are not required for recovery). In particular, iron and steel slag aggregates are removed by ripping and digging, followed by magnetic separation, crushing, further magnetic separation and finally sized by screening. They are then loaded and weighed in customer trucks subject to quality assurance and quality control for comparable virgin aggregate intended for the same use.

EPA's Response: As with the previous ingredients, we are proposing that blast furnace and steel slag used as ingredients in combustion units that are not discarded in the first instance would not be considered a solid waste provided they satisfy the legitimacy criteria for ingredients. If these materials, as described by the commenter, are considered to have been discarded in the first instance, then they would have to be sufficiently processed into ingredient products that satisfy the legitimacy criteria in order to be classified as a non-waste ingredient. Based on the processing operations described above, it appears that blast furnace and steel slag undergo sufficient processing; however, before the Agency concludes this to be the case, we request that commenters provide more detailed information regarding the level of processing that occurs.

7. Legitimacy Criteria

The ANPRM discussed the following legitimacy criteria specific to fuel products that are used in combustion processes: (1) Handled as valuable commodities; (2) have meaningful heating value; (3) and contain contaminants that are not significantly higher in concentration than traditional fuel products. Likewise, for ingredients, the ANPRM listed the following criteria: (1) Handled as a valuable commodity; (2) the non-hazardous secondary material provides a useful contribution; (3) the recycling results in a valuable product; and (4) the product does not contain contaminants that are significantly higher in concentration than traditional products. We requested

[43] For more information on the different types, or ranks, of coal, please refer to the Materials Characterization Paper on Traditional Fuels and Key Derivatives, which is located in the docket of today's proposed rule.

[44] Listed by relative frequency. *See* "Technical Background Document for the Report to Congress on Removing Wastes from Fossil Fuel Combustion: Waste Characterization." U.S. EPA. March 15, 1999.

[45] "Study on Increasing the Usage of Recovered Mineral Components in Federally Funded Projects Involving Procurement of Cement or Concrete to Address the Safe, Accountable, Flexible, Efficient Transportation Equity Act: A Legacy for Users. Report to Congress." June 3, 2008. EPA530–R–08–007. When analyzing perceived safety and health risk barriers associated with the beneficial use of recovered mineral components (including CCRs et al), this study concluded that "Findings from [several cited] analyses did not identify significant risks to human health and the environment associated with the beneficial uses of concern. In addition, [EPA] identified no documents providing evidence of damage to human health and the environment from these beneficial uses. Our overall conclusions from these efforts, therefore, are that encapsulated applications, including cement and concrete uses, appear to present minimal risk." *Id.* at 4–11.

[46] *Id* at 4–4.

[47] A series of reports have been and are being developed by U.S. EPA's Office of Research Development. To date, three documents have been finalized, including: (1) "Characterization of Mercury-Enriched Coal Combustion Residuals from Electric Utilities Using Enhanced Sorbents for Mercury Control." EPA–600/R–06/008. Feb. 2006; (2) "Characterization of Coal Combustion Residuals from Electric Utilities Using Wet Scrubbers for Multi-Pollutant Control." EPA–600/R–08/077. July 2008; and (3) "Characterization of Coal Combustion Residuals from Electric Utilities Using Multi-Pollutant Control Technology—Leaching and Characterization Data." EPA–600/R–09/151. December 2009.

comment on the criteria themselves and whether they are reasonable for non-hazardous secondary materials.

a. General

Comments: Application of Legitimacy Criteria: Commenters provided various viewpoints on the appropriateness of the legitimacy criteria for non-hazardous secondary materials that are used as fuels or ingredients. Several commenters disagreed with the application of the same subtitle C legitimacy definition for determining whether non-hazardous secondary materials are solid waste under RCRA subtitle D because non-hazardous secondary materials do not pose the same hazards. However, many of the commenters agreed with the application of the subtitle C legitimacy principles, but also argued that the criteria must be flexible to account for increasing use and changes in commodities, technologies, markets, and fuel prices and should not be more onerous than the legitimacy test codified at 40 CFR 260.43. Commenters also requested clarification as to whether all criteria need to be met, but urged EPA to recognize that legitimate uses are possible even if not all criteria are met.

EPA's Response: Application of Legitimacy Criteria: First, we would note that there are two questions that the Agency needs to answer: (1) Whether or not the non-hazardous secondary material is a fuel product or ingredient product, or whether the material has been discarded and is therefore a solid waste, which includes waste-derived fuels or ingredients and (2) whether the non-hazardous secondary material is being legitimately and beneficially used or recycled.

With respect to the legitimacy question, EPA believes it important and crucial to develop a set of legitimacy criteria to make sure that the fuel product and ingredient product are being legitimately and beneficially used and not simply being discarded via sham recycling. The definition of legitimate recycling developed for subtitle C hazardous secondary materials carefully considered the history surrounding the uses of materials, as well as the applicable case law with respect to the meaning of discard. Likewise, those same principles are pertinent to how a non-hazardous secondary material is determined not to be a solid waste. Therefore, we are proposing to codify general legitimacy criteria that use the same basic framework that has been established for the subtitle C hazardous waste regulations, but that are also tailored specifically for application to non-hazardous secondary materials that are used as fuels or ingredients in combustion units. *See* 40 CFR 241.3(d) for the proposed regulatory text of the legitimacy criteria and, for comparison *see* 40 CFR 260.43 in final regulations for the DSW hazardous waste legitimacy provisions. The rationale for the non-hazardous secondary materials legitimacy provisions (including comparisons to the DSW legitimacy provision) is discussed in section VII.D.6.

Commenters also suggested that the legitimacy criteria must be flexible to account for increasing use and changes in commodities, technologies, markets, and fuel prices and should not be more onerous than the legitimacy definition codified at 40 CFR 260.43. We agree with these commenters and have proposed qualitative criteria that we believe provide the flexibility needed in evaluating these secondary materials that will accommodate such changes. The legitimacy criteria are structured to distinguish between legitimate reuse/recycling and disposal (*i.e.,* sham recycling), while at the same time not impose restrictions on the types of non-hazardous secondary materials that may be of value in the future. For a detailed discussion of the proposed legitimacy criteria, *see* section VII.D.6.

In regard to the commenters who requested clarification on whether all criteria need to be met, we believe that each of the criteria is important and addresses certain issues that need to be assessed. Therefore, each criterion must be met in order for the non-hazardous secondary material to be considered to be a legitimate non-waste fuel or ingredient. Thus, today's proposal requires that in evaluating the legitimacy criteria, the owner/operator of the combustion unit must assure that the non-hazardous secondary material meets all of the criteria.[48] *See* section VII.D.6 for additional discussion.

Comment: Ingredients (General): We also received one general comment regarding the legitimacy criteria for ingredients. The commenter argued that the determination is not applicable for any material that is within a process and is being recycled in that process, and should not have to be justified as a secondary material, since closed-loop systems do not manage solid waste.

EPA's Response: Ingredients (General): We generally agree with the commenter. That is, to the extent that the non-hazardous secondary material has not been discarded in the first instance, which we presume it would not be as part of a closed-loop system, and such secondary material meets the legitimacy criteria, it would not be considered a solid waste when combusted. Thus, as an example, where CKD is recycled back into the cement kiln, and meets the legitimacy criteria, it is not solid waste.

b. Fuels or Ingredients Being Managed as Valuable Commodities

Comments: For this criterion, most commenters generally agreed with the Agency that such non-hazardous secondary materials should be managed as a valuable commodity, but argued that a specified containment system should not be a mandatory part of the criteria. One commenter suggested that rather than focus on containment, the focus should be on whether the non-hazardous secondary material has value for future use. Another commenter suggested that a more appropriate requirement is that the non-hazardous secondary material should be stored in a manner that preserves their economic value and avoids damaging releases to the environment. Another commenter thought that EPA should look to state requirements for containment, handling, and storage. Similarly, another commenter suggested that EPA should recognize that if a non-hazardous secondary material is managed pursuant to federal requirements that also apply to raw materials (*e.g.,* coal refuse compared to coal), the criteria are satisfied. Lastly, one commenter argued that the concept of "speculative accumulation" of one year can prevent accumulation of enough non-hazardous secondary materials to make recovery economical and thus, is not an appropriate criterion to conclude that a non-hazardous secondary material isn't being reused and is a solid waste.

EPA's Response: We generally agree with those commenters who argued that a specific containment system should not be required and, therefore, are proposing a qualitative approach in line with the same principle as the

[48] In EPA's final definition of solid waste rule regarding hazardous secondary materials, EPA codified a "legitimate recycling provision." *See* 40 CFR 260.43. This legitimacy provision has two parts. The first part includes two factors that must be considered and met, which are considered the core of the legitimacy factors. The second part of the legitimacy provision consists of two factors that must be considered, but need not be met because the Agency is aware of situations where a legitimate recycling process exists, but may not conform to one or both of these factors. For further discussion of the legitimacy factors in the hazardous waste rules, *see* section VII.C.7 of this preamble and the final definition of solid waste rule (October 30, 2008 beginning on 73 FR 64700). Thus, the application of the legitimacy provision proposed in this rule is different than that promulgated in the final definition of solid waste rule in that all of the criteria to be considered in today's proposed rule must both be considered and met.

commenter who suggested that non-hazardous secondary materials should be stored in a manner that preserves their economic value, while preventing damaging releases to the environment. We also are proposing to incorporate the concept that non-hazardous secondary materials be "contained" in the same manner as its analogous fuel or raw ingredient. Thus, we are proposing that where there is an analogous fuel or ingredient, the non-hazardous secondary material used would be required to be managed in a manner consistent with the management of the analogous fuel or ingredient or otherwise must be adequately contained so as to prevent releases to the environment. As explained in section VII.D.6, an analogous ingredient or fuel" is an ingredient or fuel for which the non-hazardous secondary material substitutes and which serves the same function and has similar physical and chemical properties as the non-hazardous secondary material. Where there is no analogous fuel or ingredient, the non-hazardous secondary material must be adequately contained so as to prevent damaging releases to the environment. "Adequately contained" is when a non-hazardous secondary material is stored in a manner that adequately prevents releases to the environment considering the nature and toxicity of the non-hazardous secondary material. In regard to the comment on speculative accumulation, we are not proposing a specific timeframe, because states already require varied timeframes and we will leave this up to the state's discretion.

c. Fuels Must Have Meaningful Heating Value. The ANPRM discussed the meaningful heating value criterion for legitimate alternative fuel, and outlined a qualitative approach rather than a "bright-line" cutoff for heating value. The ANPRM requested comment as to whether it was possible or appropriate to establish a specific heating value cutoff.

Comments: Several commenters favored the ANPRM approach, while others recommended either a lower Btu benchmark or replacing the Btu benchmark with a case-by-case analysis. No commenters recommended deleting the criterion. Commenters emphasized that innovations and advancements in technology can efficiently produce energy from non-hazardous secondary materials with lower heating value content.

EPA's Response: We are proposing a qualitative approach for a meaningful heating value criterion as outlined in the ANPRM. The proposed regulatory text specifies that "the material must have a meaningful heating value and be used as a fuel in a combustion unit that recovers energy". *See* proposed 241.3(d)(1)(ii). We are clarifying in this proposal, that non-hazardous secondary materials with a heating value of greater than 5,000 Btu/lb, as fired, would be considered to satisfy the criterion. However, non-hazardous secondary materials with a heating value lower than 5,000 Btu/lb, as fired, may also be considered to have a meaningful heating value if the unit can cost-effectively recover meaningful energy. *See* section VII.D.6.a. for an explanation of the factors that may be considered in determining whether an energy recovery unit can cost-effectively recover energy from a non-hazardous secondary material. Also, as outlined in the same section, this criterion is an appropriate factor, since it expresses the principle that non-hazardous secondary materials used as a fuel with a meaningful heating value provides a useful contribution to the manufacturing process. The Agency believes a 5,000 Btu/lb benchmark, as fired, identifying when a non-hazardous secondary material, by definition, provides fuel value is appropriate since it is consistent with determinations expressed in previous RCRA and CAA rulemakings, including the RCRA comparable fuels rule (63 FR 33781), the RCRA subtitle C boilers and industrial furnaces rule (48 FR 11157–59), and the CAA NESHAP for Hazardous Waste Combustors NODA (62 FR 24251).

We request comment on whether it would be appropriate to also identify a lower Btu/lb threshold, below which non-hazardous secondary materials would not be considered to have meaningful heating value and thus, would be a solid waste by definition.

d. Fuel/Ingredient Contaminant Levels. To address the possible presence of waste-like contaminants in non-hazardous secondary materials, the ANPRM stated that such secondary materials used as fuels should not contain contaminants that are significantly higher than those contained in traditional fuels. For ingredients, the ANPRM stated that products that use non-hazardous secondary materials as ingredients in combustion units should not contain contaminants that are significantly higher in concentration than the product produced without the non-hazardous secondary material. For both ingredients and fuels, the ANPRM suggested that a qualitative approach may be more appropriate to use than numerical specifications. In addition, we requested comment on whether the contaminants evaluated should be the hazardous constituents listed in Appendix VIII to 40 CFR part 261, or whether a different list of contaminants would be more appropriate.

Comments: Commenters were evenly divided on whether the presence of contaminants was an appropriate legitimacy criterion. For commenters favoring the criterion, most believed that a qualitative approach was preferable; stating that little risk exists for environmental exposure and numerical specifications may be impractical due to the multiplicity of fuels or ingredients. However, a minority of commenters favored a quantitative approach. For commenters recommending that the presence of contaminants not be included as a criterion, most emphasized that emissions will be controlled under either CAA sections 112 or 129. They stated that comparative contaminant concentrations are inappropriate, and that the Agency should recognize the lower risks posed by non-hazardous secondary materials. One commenter stated that the amount of contamination acceptable in an alternative fuel depends on how much is fired with the main boiler fuel, the type of contaminant (organic vs. inorganic), and the emission controls used.

Specifically with respect to the use of ingredients in combustion units, one commenter agreed that the assessment should involve the final recycled product and not the ingredient itself. However, another commenter countered that the assessment should be a comparison of post combustion emission levels, not the product made with non-hazardous secondary materials to those in a product made with virgin materials. This commenter reasoned that combustion will destroy many of the substances that EPA considers possible contaminants and basically eliminates any environmental concern. Another commenter recommended an analysis of appropriate total constituent concentrations, leachable constituent concentrations, and a comparison to traditional ingredients (as outlined in the Solid Waste RCRA subtitle D groundwater protection constituent list).

EPA's Response: Based on our assessment of all of the comments, we believe it appropriate to include contaminant levels as a legitimacy criterion. Thus, we do not agree with those commenters' that assert that contaminant comparisons are not appropriate to require as part of the legitimacy criteria. The Agency believes the criterion is necessary because non-hazardous secondary materials that contain contaminants that are not comparable in concentration to those contained in traditional fuel products or

ingredients would suggest that these contaminants are being combusted as a means of discarding them, and thus the non-hazardous secondary material should be classified as a solid waste. In some cases, this can also be an indicator of sham recycling. For example, non-hazardous secondary materials that may not contain comparable concentrations of contaminants include chromium-, copper-, and arsenic (CCA)-treated lumber, polyvinyl chloride (PVC) plastics which can contain up to 60 percent halogens (chlorine), lead-based painted wood, and fluorinated plastics. Also, we disagree with the commenter who argued that any assessment should only include a comparison of post-combustion emission levels because the combustion unit will destroy many of the substances that EPA considers possible contaminants (and thereby eliminate any environmental concern). The Agency believes that this post-combustion assessment of contaminants further supports the principle that contaminant levels (before and after combustion) are important indicators of legitimacy.

The legitimacy criterion for fuel/ingredient contaminants outlined in today's rule has changed from the criterion outlined in the ANPRM. In the ANPRM, non-hazardous secondary materials used as fuel could not contain contaminants that were significantly higher than traditional fuel products. For ingredients, the non-hazardous secondary material could not result in products that contain contaminants that are significantly higher in concentration than found in traditional products.

Under today's proposed rule, non-hazardous secondary material used as fuels in combustion units must contain contaminants (defined as HAP listed under CAA section 112(b) and the nine pollutants listed under CAA section 129) at levels "comparable" to those in traditional fuels which the combustion unit is designed to burn. For use as an ingredient, the non-hazardous secondary material must result in products that contain contaminants at levels that are "comparable" in concentration to those found in traditional products that are manufactured without the non-hazardous secondary material ingredients.

As discussed in section VII.C.7., requiring that the secondary material have contaminants at levels comparable to traditional fuels would ensure that the burning of any secondary materials in combustion units will not result in discard of materials and will not result in increased releases to the environment that could impact the health and environment of the local community. Ensuring that the level of contaminants in the non-hazardous secondary material is comparable to traditional fuels would prevent secondary materials from being discarded and be the most protective of human health and the environment. Today's proposed rule also requests comment on an approach, consistent with the ANPRM approach, which would only compare contaminants at levels that are significantly higher than traditional fuel products.

Similar to the ANPRM, the assessment of whether the non-hazardous secondary material used as a fuel has contaminants comparable to traditional fuel products is to be made by directly comparing the numerical contaminant levels in the non-hazardous secondary material to the contaminant levels in traditional fuels. *See* section VII.C.7., for a complete discussion of contaminant assessments.

The assessment of whether products produced from the use of non-hazardous secondary material ingredients in combustion units that have contaminants that are comparable in concentration to traditional products can be made by a comparison of contaminant levels in the ingredients themselves to traditional ingredients they are replacing, or by comparing the contaminant levels in the product itself with and without use of the non-hazardous secondary material ingredient. *See* section VII.D.6.b.

e. Ingredients Must Provide Useful Contribution. The ANPRM cited (from the October 2008 DSW Final Rule for hazardous waste) five ways [49] in which a secondary material can add value and usefully contribute to a recycling process and solicited comment on whether they are appropriate for non-hazardous secondary materials.

Comment: Only one commenter responded and indicated that the five criteria are too narrow and should be broadened to apply to the non-hazardous secondary material uses (*i.e.,* processes not considered recycling) since using the criteria for hazardous waste as a model is too limiting.

EPA's Response: After review of the comment, we understand that there is some interest in broadening those criteria for non-hazardous secondary material use, but the commenter did not provide any information to merit the development of a separate or additional criteria for non-hazardous secondary material use to describe how they can "add value and usefully contribute to a recycling process" (or broaden to non-recycling uses as suggested by the commenter). However, the Agency solicits comments on this point; in particular, what the separate criteria would be and how a non-hazardous secondary material would or can "add value and usefully contribute to a recycling process."

f. Ingredients Must Produce a Valuable Product. For this criterion to be met, the ANPRM indicated that a product or intermediate is valuable if it is (i) sold to a third party or (ii) used by the recycler or generator as an effective substitute for a commercial product or as an ingredient or intermediate in an industrial process. We then requested comment on whether this description of valuable product/intermediate is an appropriate way to consider this criterion in the context of non-hazardous secondary materials used as ingredients.

Comments: One commenter responded that they support this criterion, but caution that it be broad enough so that it addresses the value obtained by both its use on-site and off-site by a third party. The commenter also suggested that the provision be interpreted broadly to also include traditional recycling markets and the products generally in which such secondary materials are utilized.

EPA's Response: We believe that the criteria described in the ANPRM are broad enough to address the value obtained by both its use on-site and off-site by a third party. With regard to interpreting the criterion broadly enough to include traditional recycling markets and the products in which the secondary materials are utilized, we do not agree that it would be appropriate. Specifically, this rule is addressing a particular issue within the context of RCRA—that is, which non-hazardous secondary materials are or are not solid wastes when used in a combustion unit. We have tailored the legitimacy criteria to apply specifically to the use of these non-hazardous secondary materials as fuels or ingredients in combustion units only. An assessment of uses beyond those in combustion units is beyond the scope of this rulemaking.

8. De Minimis Concept

Although we did not discuss the concept of *de minimis* in the ANPRM, commenters argued strongly that EPA allow for *de minimis* amounts of solid

[49] The five ways include: (i) The secondary material contributes valuable ingredients to a product or intermediate; or (ii) replaces a catalyst or carrier in the recycling process; or (iii) is the source of a valuable constituent recovered in the recycling process; or (iv) is recovered or regenerated by the recycling process; or (v) is used as an effective substitute for a commercial product.

waste to be burned without being subject to the CAA 129 requirements.

Comments: Several commenters believe that any regulatory construct should include a *de minimis* exemption that excludes from the definition of solid waste for purposes of CAA section 129, those materials (*i.e.,* solid waste) that, when combusted, result in *de minimis* emissions. An example provided by the commenters of a waste material is boiler chemical cleaning waste, which consists primarily of water, but also includes metal deposits from the boiler tubes, as well as spent solvent. Another example is oily rags which are generated in small quantities during routine maintenance activities. Air emissions associated with these practices is a small fraction compared to the emissions generated from fossil fuel combustion. Commenters also cited several court decisions that held that EPA retains the legal authority to promulgate *de minimis* exceptions for regulatory schemes.

EPA's Response: The issue of whether the burning of *de minimis* amounts of solid waste (*i.e.,* because it results in *de minimis* emissions) can be exempted from CAA 129 regulation is outside the scope of this rulemaking, which is only concerned with identifying which non-hazardous secondary materials burned as fuels or ingredients in combustion units are or are not solid waste.

D. Rationale for, and Detailed Description of, Proposed Approach

Under this proposal, non-hazardous secondary materials used as fuels in combustion units would be considered solid waste unless: (1) The non-hazardous secondary materials remain under the control of the generator as discussed in section VII.D.1, and are legitimate fuels; or (2) they are legitimate fuels that are produced from the processing of discarded non-hazardous secondary materials as discussed in section VII.D.4. Non-hazardous secondary materials used as a fuel in combustion units that are transferred to a third party (and not considered to be managed within the control of the generator) are considered solid wastes unless a non-waste determination has been made pursuant to the proposed petition process (discussed below in section VII.D.5).[50]

Non-hazardous secondary materials used as ingredients in combustion units would not be considered solid waste if they have not been discarded in the first instance and if they are legitimate ingredients, irrespective of whether they have been transferred to a third party outside the control of the generator. Non-hazardous secondary materials that have been discarded may be processed into a non-waste ingredient that meets the legitimacy requirements as discussed in VII.D.4.

The ANPRM also discussed another possible exclusion from being a solid waste—that is, hazardous secondary materials that are excluded from the definition of solid waste under RCRA subtitle C when combusted. However, EPA has concluded that it does not need to include this exclusion since these materials have already been excluded from the definition of solid waste as hazardous secondary materials and, therefore, are not subject to this rule, which deals with the definition of solid waste for non-hazardous secondary materials used in combustion units. As noted in the ANPRM, under the hazardous waste regulations, the Agency has evaluated a number of hazardous secondary materials that are recycled and determined that such materials, while they either met a listing description or exhibited one or more of the hazardous waste characteristics, were not "solid wastes" for purposes of the RCRA Subtitle C hazardous waste regulations when they were combusted. Specifically, the following materials may be burned under certain conditions and are not defined as solid wastes for purposes of the hazardous waste regulations—black liquor, spent sulfuric acid, comparable fuels and commercial chemical products that are themselves fuels.[51] These secondary materials are not solid wastes provided they are handled under the applicable conditions of the exclusions specified under the RCRA subtitle C hazardous waste regulations, and are not considered solid wastes for purposes of CAA section 129. The rules covering the determinations for black liquor, spent sulfuric acid,[52] comparable fuels,[53] and commercial chemical products that are themselves fuels[54] are not being reopened in this proceeding and EPA is no longer requesting comment on those solid waste definitions for purposes of this rule.

Except for the petition process, the proposed criteria are designed to be self implementing in nature, *i.e.* they do not require prior Agency approval.

1. Non-Hazardous Secondary Materials Used as Fuel Within the Control of the Generator

We are proposing to use the general framework finalized in the Definition of Solid Waste Rule to determine circumstances under which non-hazardous secondary materials remaining under the control of the generator that are used as fuels in combustion units are not considered to have been discarded.

a. *Scope and Applicability.* EPA is proposing that non-hazardous secondary materials used as fuels in combustion units that remain within the control of the generator and that meet the legitimacy criteria specified in section VII.D.6 would not be solid waste. Non-hazardous secondary materials that remain within the control of the generator and meet these criteria are referred to as legitimate (non-waste) fuel products. The proposed conditions that must be satisfied to qualify as "under the control of the generator" are found in proposed 40 CFR part 241.3. Nevertheless, EPA is seeking comment on whether such secondary materials should be considered solid wastes and thus, be subject to the CAA section 129 requirements if combusted.

There are two scenarios where non-hazardous secondary materials used as fuels can be demonstrated to remain within the control of the generator. As such, the proposal consists of two parts in determining whether these secondary materials qualify for being "under the control of the generator." The first part applies to non-hazardous secondary material generated and used as fuels at the generating facility. For purposes of this proposed criteria, "generating facility" means all contiguous property owned, leased, or otherwise controlled by the secondary material generator, and

[50] As we noted earlier in the preamble, traditional fuels also are not considered solid wastes when burned in a combustion unit. Therefore, we will not discuss the use of traditional fuels further since we believe it is understood that they are legitimate products and not wastes.

[51] Black liquor is burned in a pulping liquor recovery furnace and then reused in the pulping process, while spent sulfuric acid is used to produce virgin sulfuric acid; in both these instances, these hazardous secondary materials are considered to be an integral part of the manufacturing process. With respect to comparable fuel, these hazardous secondary materials are considered a legitimate non-waste fuel because they meet the chemical and physical specifications of a traditional benchmark fuel. Commercial chemical products that are themselves fuels, such as off-specification fuels, including gasoline, jet fuel, kerosene, diesel, etc., are not solid wastes when burned as fuels if that is their intended purpose (40 CFR 261.2(c)(2)(ii)).

[52] *See* Definition of Solid Waste Final Rule, January 4, 1985 at 50 FR 641–642, covering both black liquor and spent sulfuric acid.

[53] *See* "RCRA Comparable Fuels Exclusion" Final Rule, June 19, 1998, 63 FR 33782.

[54] *See* 50 FR 614 "Amendments to the Definition of Solid Waste" (Final Rule), January 4, 1985 at 50 FR 618, 629. *See also* Hazardous Waste Management System; Definition of Solid Waste; Corrections, April 11, 1985 at 50 FR 14219.

"secondary material generator" means any person whose act or process produces non-hazardous secondary materials at the generating facility. A facility that collects non-hazardous secondary materials from other persons (for example, used tires collected through a collection program) is not the secondary material generator of those materials. This is consistent with the approach taken in the DSW final rule, which specified that a facility that collects hazardous secondary materials from other persons (for example, when mercury-containing equipment is collected through a special collection program), would not be considered the hazardous secondary material generator for purposes of eligibility for the generator-controlled exclusion. *See* 73 FR at 64715.

If a generator hires or contracts with a different company to use the non-hazardous secondary materials at the generator's facility as fuel, either temporarily or permanently, these materials remain under the control of the generator. However, generators sometimes contract with a second company to collect non-hazardous secondary materials at the generating facility and such materials are subsequently used as fuels in a combustion unit at another facility. In that situation, if the facility that burns the non-hazardous secondary material is not "within the control of the generator" as defined below in the second part of the definition, then the non-hazardous secondary material fuel would be considered a solid waste unless a non-waste determination has been granted pursuant to the petition process.

The second part of the proposed definition applies to non-hazardous secondary material generated and used as fuels at a different facility that is controlled by the generator (or if a person as defined in proposed § 241.2 controls both the generator and the facility using the fuel in a combustion unit). For purposes of this proposed criteria, "control" means the power to direct the policies of the facility, whether by ownership of stock, voting rights, or otherwise, except that contractors who operate facilities on behalf of a different person as defined in proposed § 241.2 shall not be deemed to "control" such facilities. Thus, when a contractor operates two facilities, each of which is owned by a different company, non-hazardous secondary materials generated at the first facility and used as a fuel at the second facility is not considered "under the control of the generator."

We note that the DSW final rule includes a third part of the definition that applies to hazardous secondary materials that are generated pursuant to a written contract between a tolling contractor and a toll manufacturer and legitimately reclaimed by the tolling contractor. For purposes of that exclusion, a tolling contractor is a person who arranges for the production of a product or intermediate made from specified raw or virgin materials through a written contract with a toll manufacturer. The toll manufacturer is the person who produces the product or intermediate made from the specified raw or virgin materials pursuant to a written contract with a tolling contractor. We view this as a very specific type of arrangement where, for example, a chemical manufacturer outsources a step in the manufacturing process to another company (typically a "batch" manufacturer), and then the batch manufacturer sends both the product and the residuals back to the main company (and the residuals are then reclaimed by the main company). Although there are two companies, there is only one manufacturing operation, and the main company keeps control over (and liability for) everything through the tolling contract.

We do not believe that tolling contracts are relevant to non-hazardous secondary materials used as fuels in combustion units as we are unaware of these types of contractual arrangements where both products and secondary material fuel are sent to what we are calling tolling contractors. As a result, we are not including this type of arrangement under the proposed definition for non-hazardous secondary material fuels that remain under the control of the generator. However, the Agency requests comments on whether to include this option in the final rule; those persons who provide comments supporting the addition of this option to the final rule should provide specific instances or examples of where non-hazardous secondary materials are managed under tolling arrangements and the frequency that such arrangements are used, and how these arrangements remain "under the control of the generator."

b. Restrictions and Requirements

Legitimate Use. Under this proposed rule, non-hazardous secondary materials used as fuels in combustion units that remain under the control of the generator must meet the legitimacy criteria proposed in § 241.3(d). To satisfy the legitimacy criteria, the non-hazardous secondary material (non-waste) fuel must be handled as a valuable commodity, have meaningful heating value and be used as a fuel, in a combustion unit that recovers energy, and contain contaminants at levels comparable to those in traditional fuels which the combustion unit is designed to burn. The details of the legitimacy criteria are discussed in Section VII.D.6. of this proposal.

Notification. We are not proposing to require facilities that use non-hazardous secondary material fuels within the control of the generator to notify EPA as part of this proposal. We believe this would be duplicative of the CAA 112 regulatory notification and record keeping requirements being proposed for boilers and process heaters today. That proposal would require specific notifications from sources subject to the standards including notifications of compliance status, test results and descriptions of applicable air pollution control devices. In addition, for sources that have made a non-waste self-determination under § 241.3, the proposal for boilers and process heaters requires that records be maintained which document how the fuel meets legitimacy criteria and the definition of processing as appropriate. However, we solicit comment on this and specifically request comment on whether the Agency should require, at least initially, if not on a periodic basis, notification and recordkeeping under RCRA by those persons who both generate or combust non-hazardous secondary materials that are not solid wastes, including documentation that explains or provides the basis for the non-hazardous secondary material meeting the legitimacy criteria, and thus, is not a solid waste.

2. Non-Hazardous Secondary Materials Used as Fuel Outside the Control of the Generator

Non-hazardous secondary materials used as a fuel in combustion units that are not considered to be managed within the control of the generator would be considered solid wastes unless they have been processed into a legitimate non-waste fuel product (discussed in section VII.D.4. below) or unless a non a non-waste determination has been made pursuant to the proposed petition process (discussed in section VII.D.5. below).

This proposed approach differs from the ANPRM approach, which specified that non-hazardous secondary materials, such as used tires collected at tire dealerships and transferred to a third party would not be considered discarded if, for example, they were managed pursuant to state tire collection programs. As previously discussed, comments received from the states suggested that non-hazardous

secondary material fuels that are transferred to a third party have entered what is traditionally considered to be the "waste stream" (and have been regulated by the states as wastes) and therefore should appropriately be considered to be solid wastes (*e.g.,* scrap tires) unless/until they are processed into non-waste fuel products. However, the Agency seeks comment on whether the approach described in the ANPRM would be more appropriate. In submitting comments supporting a broader approach, we request that commenters provide the basis for why such secondary materials have not been discarded.

When non-hazardous secondary material fuels are transferred to another party, we generally believe that the material is discarded since the generator has relinquished control of the secondary material and the entity receiving such materials may not have the same incentives to manage them as a useful product, which results in the materials being discarded. (Note: As indicated above, the Agency is proposing a petition process to allow any person to demonstrate that non-hazardous secondary material fuels transferred to another party outside the control of the generator have not been discarded, and thus, are not a solid waste. *See* section VII.D.5. below for details on the petition process.)

This lack of incentive to manage as a useful product has been well-documented in the context of hazardous secondary material recycling as evidenced by the results of the environmental problems study performed in support of the DSW final rule.[55] (This scenario does not apply to transfers taking place under the transfer-based exclusion for hazardous secondary materials that are generated and then transferred to another company for the purpose of reclamation.) However, this finding also holds true for non-hazardous secondary materials that are used as fuel.

For example, the over-accumulation of scrap tires is well known and has resulted in massive piles of discarded tires that have contributed to the overall solid waste management problem due to the threat of fires, such as the Rhinehart Tire Fire Dump,[56] and because they provide an ideal breeding ground for mosquitoes and rodents. It is estimated that 275 million tires remained in stockpiles across the United States in 2003 and that approximately 290 million new scrap tires are generated each year.[57] Other non-hazardous secondary materials destined for use as a fuel that were accumulated, but then discarded have similarly contributed to the overall solid waste management problem.[58]

As discussed in the DSW final rule,[59] this pattern of discard at off-site, third party reclaimers appears to be a result of inherent differences between commercial recycling and normal manufacturing. As opposed to manufacturing, where the cost of raw materials or intermediates (or inputs) is greater than zero and revenue is generated primarily from the sale of the output, secondary materials recycling, including when used as a fuel, can involve generating revenue primarily from receipt of the secondary materials. Recyclers of secondary materials in this situation may thus respond differently than traditional manufacturers to economic forces and incentives, accumulating more inputs (secondary materials) than can be processed and generating stockpiles with sometimes little incentive to perform actual recycling.

However, this pattern of discard does not hold true for materials that are more commodity-like than waste like, such as traditional fuels and non-hazardous secondary materials used as ingredients in manufacturing processes that utilize combustion systems. As previously discussed, traditional fuels have been burned historically as fuels and have been managed as valuable products, are considered unused products and therefore are not solid wastes. Also *see* discussion in section VIII.D.6.b below that explains EPA's rationale as to why ingredients that are not managed within the control of the generator are determined not to be discarded.

In some cases, a non-hazardous secondary material may be transferred to another entity to be burned for energy and still more closely resemble a product than a waste, despite the fact it is neither a traditional fuel nor has it been processed into a legitimate fuel. In such cases, the Agency has included a petition process where a person may petition EPA for a case-specific determination that the non-hazardous secondary materials are not discarded and therefore not solid wastes. *See* section VIII.D.5. for a more detailed discussion of the petition process.

In the proposed regulatory language, EPA is not specifying whether particular materials are or are not solid wastes. However, as discussed previously, whole tires that originate from tire dealerships and automotive shops (that are overseen by state tire collection oversight programs) would be considered to be discarded unless and until they are processed into TDF that has removed the steel belts and wire, or a case-specific non-waste determination petition is granted. EPA believes tires that are collected from tire dealerships and automotive shops, especially if overseen by a state tire collection oversight program that collects fees and regulates the process under state "waste" authorities, generally meet the plain meaning of discard; such materials can be considered as having been "discarded" by the original owner of the tire.

This is further supported by the fact that many state agencies regulate tires as wastes, either pursuant to their solid waste authority or pursuant to statutory authority that specifically addresses the management of used tires (some use both authorities). The level of regulation ranges from state to state, but many states directly regulate used tires, for example, with storage requirements, such as speculative accumulation and fire suppression requirements, up until their final use as a fuel in combustion units. In addition, many states subsidize certain end-use applications, suggesting that used tires, even if managed pursuant to state oversight programs, are discarded materials once they are generated at tire collection points, such as tire dealerships.

3. Non-Hazardous Secondary Materials Used as Ingredients in Combustion Units

Non-hazardous secondary materials used as ingredients in combustion units would not be solid wastes provided they satisfy the legitimacy criteria discussed in section VIII.D.6.b below. We are not differentiating between ingredients that are used within the control of the generator from those that are not since we believe that the use of non-hazardous secondary materials as ingredients is considered to be more integral or akin to use in a commercial manufacturing process and thus, these non-hazardous secondary materials

[55] U.S. EPA *An Assessment of Environmental Problems Associated With Recycling of Hazardous Secondary Materials* (Docket # EPA–HQ–RCRA–2002–0031–0355), January 2007.

[56] *See* 51 FR 21054, June 10, 1986.

[57] U.S. EPA *Scrap Tire Clean-Up Handbook: A Resource for Solid Waste Managers Across the United States* EPA–905–B–06–001, January 2006.

[58] U.S. EPA *Description of Non-Hazardous Secondary Material Events that Resulted in Adverse Environmental Impacts* (Docket # EPA–HQ–2008–0329), September 2009.

[59] U.S. EPA *A Study of the Potential Effects of Market Forces on the Management of Hazardous Secondary Materials Intended for Recycling* (Docket # EPA–HQ–RCRA–2002–0031–0358), November 2006. While the study focuses on hazardous secondary materials, the underlying economic theory would apply equally to non-hazardous secondary materials.

should not be considered discarded provided they satisfy the legitimacy criteria.

4. Non-Hazardous Secondary Materials Processed Into Non-Waste Fuel/ Ingredient Products

EPA is proposing that legitimate fuel or ingredient products that result from the processing of discarded non-hazardous secondary materials are not solid wastes. Of course, the legitimacy criteria specified in section VII.D.6. below must be met. Because the fuel/ ingredient products meeting these legitimacy criteria are, in effect, reclaimed products from a recycling process, EPA considers such materials to be new products that have not been discarded and therefore are not solid wastes. Until the non-hazardous secondary materials have been processed into a non-waste fuel or ingredient product meeting the legitimacy criteria, the discarded non-hazardous secondary material are considered solid wastes and would be subject to all appropriate federal, state and local requirements.

Similar to the proposed approach for non-hazardous secondary materials that are used as fuels within the control of the generator, we are not proposing to require facilities that combust non-hazardous secondary materials that have been processed into non-waste fuel/ ingredient products to notify EPA as part of this proposal. We believe this would be duplicative to the CAA 112 regulatory notification and record keeping requirements being proposed for boilers and process heaters today. That proposal would require specific notifications from sources subject to the standards including notifications of compliance status, test results and descriptions of applicable air pollution control devices. In addition, for sources that have made a non-waste determination under 40 CFR 241.3, the proposal for boilers and process heaters requires that records be maintained which document how the fuel meets legitimacy criteria and the definition of processing as appropriate. However, we solicit comment on this and specifically request comment on whether the Agency should require, at least initially, if not on a periodic basis, notification and recordkeeping under RCRA by those persons who both generate or combust non-hazardous secondary materials that are not solid wastes, including documentation that explains or provides the basis for the non-hazardous secondary material meeting the legitimacy criteria, and thus, is not a solid waste.

a. *Proposed Definition of Processing.* The proposed definition of processing means any operations that transform discarded non-hazardous secondary material into a new fuel or new ingredient product. Minimal operations, such as operations that result only in modifying the size of the material by shredding, do not constitute processing for purposes of this definition. Processing includes, but is not limited to, operations that: remove or destroy contaminants; significantly improve the fuel characteristics of the material, *e.g.,* sizing or drying the material in combination with other operations; chemically improve the as-fired energy content; and improve the ingredient characteristics. While today's rule proposes a definition of operations that constitute processing, the level of processing that is necessary to render a discarded non-hazardous secondary material into a non-waste product is dependent on the material. We note, however, that discarded non-hazardous secondary materials that are not processed or minimally processed (as discussed above *i.e.,* processed in a manner that does not meet our definition of processing) would be considered a waste-derived fuel or ingredient, and thus a solid waste, no matter how legitimate their use is as a fuel or ingredient. In addition, non-hazardous secondary materials that are processed and used as fuels or ingredients in combustion units, but do not meet the legitimacy criteria, would be considered to be sham use and thus a solid waste. The Agency seeks comment on the proposed definition of processing, including whether such definition provides sufficient clarity that it can be implemented under the self-implementing provision in today's proposed rule (this approach is discussed further in this section).

b. Rationale for Processing Discarded Material Into Non-Waste Products. Today's proposed rule identifies circumstances where materials that have been discarded in the first instance, and are thus solid wastes, can be rendered into new non-waste products through legitimate processing consistent with the definition outlined above. The basic principle that must be satisfied is that the discarded material must undergo sufficient processing that produces either a new fuel or ingredient product. The new product must have properties that provide the end user the assurance that the material consistently satisfies the fuel/ingredient product criteria based on the type of combustion unit the secondary material is used in (*e.g.,* as a fuel in a boiler or as an ingredient in a cement kiln).

The principle that products can be produced from a waste is common to industrial processes and commercial recycling markets. Newspaper and aluminum cans discarded by consumers are then collected, sorted and processed into new recycled paper and aluminum products that are not considered solid waste. Collected plastic is generally sent to a reclaimer, who will sort, grind, and clean the plastic. The cleaned and sorted plastic is sent to a manufacturer who will use it as feedstock. These are clear examples where discarded materials are processed into legitimate non-waste products.

Recycled fuel products are no different from recycled paper and aluminum cans with respect to discard. If non-hazardous secondary materials that are discarded by being abandoned, disposed of or thrown away, but are later collected, segregated, and processed into a homogenous fuel product that is marketed and sold as a valuable commodity and are no different that traditional fuels used today, then they should no longer be considered solid waste, just as recycled paper is not a solid waste.

There are other examples beyond consumer recycled materials where discarded materials are processed into new products. These examples include specific exclusions from the hazardous waste regulations, which provide insight into how secondary materials can be processed into valuable products. For instance, discarded spent solvents are commonly recycled via distillation into legitimate, newly usable solvents. These regenerated solvents are clearly considered to be products, not wastes. *See* 50 FR 634, January 4, 1985. Scrap metal that has been discarded is another example of a non-hazardous secondary material that is processed into a non-waste. (EPA specifically exempted scrap metal that has been processed from the definition of solid waste (*see* 261.4(a)(13).) For scrap metal to be considered "processed," it must have been "manually or physically altered to either separate it into distinct materials to enhance the economic value or improve the handling of these materials. Processed scrap metal includes * * * scrap metal which has been baled, shredded, chopped, crushed, flattened, cut, melted, or separated by metal type (*i.e.* sorted) * * *" (*see* 40 CFR 261.1(c)(10)). We believe this is a good example of where the level of processing necessary to convert a waste material to a non-waste material is dependent on the material itself.

Off-spec used oil is another example of a secondary material which we believe is discarded, but can be processed into a non-waste product (*see* section VII.C.5.d.). Once used oil is determined to be on-spec, we do not view it to be a solid waste since it is no longer regulated under the used oil management standards of 40 CFR part 279 and can be managed as a traditional fuel.[60]

One of the difficulties the Agency faces with determining whether non-waste fuels can be processed from discarded materials is that the combustion of materials is commonly associated with disposal, whether it is waste disposal in incinerators or waste disposal in energy recovery devices (*e.g.,* municipal waste combustors that recover energy by producing electricity). Therefore, many equate the burning of any secondary material to discard, as some commenters have argued. This approach does not take into account that the secondary material has in fact been produced in a process that uses the discarded material as a feed stream to produce a safe fuel product that is a valuable commodity and sold in the marketplace no differently than traditional fuels. We view such an approach being a common sense interpretation of the statutory definition of solid waste under RCRA. Again, fuel produced from discarded non-hazardous secondary materials should not be considered solid waste just as recycled newspapers are not considered solid waste, since the material has been processed or "manufactured" into a new fuel product. The use of these energy containing secondary materials can be an effective substitute for traditional fuels. Such materials can provide economic efficiencies due to lower overall resource use, while still protecting human health and the environment.

Another difficulty the Agency faces is the misconception that discarded material that is burned, either for destruction or energy recovery, by definition has high levels of contaminants. We do not believe this is the case for many of the non-hazardous secondary materials we are assessing. The manner in which the secondary material is managed is a key factor that determines discard (abandoned, disposed of, or thrown away); contaminant levels are part of that consideration, such that if a secondary material has high levels of contaminants, it would be considered sham recycling, which is one type of way a material can be "disposed of." Clean materials can be discarded just like contaminated materials can. This, combined with the perception that combustion of secondary materials is equated to discard, results in the perception that there needs to be a very high threshold with respect to the level of processing that must take place to render a discarded material into a non-waste product. We believe, however, that a strict, but appropriate level of processing is necessary which is reflected in the processing definition outlined in today's proposed rule. We also note that in order for any secondary material to be considered a non-waste fuel, it must contain contaminants at levels that are comparable to traditional fuels in use today.

To put this into context, we believe it would help to include examples of processing of discarded non-hazardous secondary materials—those which we believe are clearly adequate processing to render the material into a non-waste fuel or ingredient product in accordance with the definition of processing in § 241.2 and those that do not.

c. Examples of Adequate Processing

Examples of non-hazardous secondary materials that have been discarded, but can be processed into a non-waste fuel or ingredient product include, but are not limited to, used tires, solid waste processed in gasifiers to produce synthesis gas, off-spec used oil (discussed above), sewage sludge processed into pellets, painted wood, and coal fines and biomasss processed into pellets with the impurities removed. Each of these are described in more detail below.

Used Tires. EPA views used tire processers as facilities that take solid waste that can produce valuable non-waste products. Used tires undergo various processing steps to meet certain specifications that are necessary for a particular end use, whether it be for use as TDF, or for use in other non-combustion applications, such as ground rubber applications (*e.g.,* for use in sidewalks).[61] Used tire processors typically enter into contracts with the end users of these tire derived products that specify that the processed tires meet certain specifications (*i.e.* size of tire pieces, wire content) to ensure the material consistently meets the needs of that particular end use. This is common for TDF.

Used tires are often processed by shredding and removing dirt or other contaminants to produce TDF. Processing scrap tires into TDF can involve two physical processing steps: chipping/shredding (usually ranging in size from 1 to 4 inches) and (in some cases) metal removal, with the amount of metal in TDF varying depending on how much of the tires have been processed. For some units, such as cement kilns, metal in the wire can be used in the manufacturing process.[62] However, most other units benefit from TDF that has been processed to minimize the amount of metal and improve heating efficiency.

EPA considers used tires that have been shredded/chipped into TDF and with the metal belts or wire removed, to meet the definition of processing discussed above. Thus, used tires that have been shredded/chipped without the removal of the metal belts or wire would not be considered to have been sufficiently processed, and any TDF that is generated in such a fashion would be considered a waste-derived fuel. Removing the metal belts or wire will help reduce metal contaminants in the emissions and ash, and may improve the burning characteristics for some uses of the TDF. As is the case for all types of solid fuel, proper characterization of the size and composition of TDF are important factors that combustion unit operators assess to determine if TDF is a suitable fuel for their specific combustion unit design.[63] For example, ASTM Standard 6700–01, describes standard practices for using TDF as fuels, and also specifies sampling and analysis methods and procedures that apply to TDF that cover composition, and fuel characterization analyses. The standards also address the size of the tire pieces

[60] Once used oil is claimed to be on-spec and the marketer complies with the requirements for analysis and record retention, notification, and record tracking shipment to on-specification burners, it is no longer subject to the management standards.

[61] As discussed previously, today's proposal only addresses non-hazardous secondary materials that are used in combustion process, and not in other applications.

[62] We note that most cement kilns use whole tires as fuels, as opposed to TDF chips, because their process does not require the TDF to be in the form of small chips to use it as a fuel, and does not require removal of the metal (since they use the metal as an ingredient). Under today's proposal, cement kilns that burn whole tires would be subject to the CAA section 129 requirements, unless the tires were processed to produce TDF or a non-waste determination was issued by EPA regarding the burning of whole tires.

[63] With regard to the legitimacy criteria discussed in Section VII.B.3, the heating value of scrap tires (12,000 Btu/lb to 16,000 Btu/lb) is the highest of all secondary materials, except used oil (17,800 Btu/lb), and higher than typical coal values. Contaminants of potential concern have been measured for both materials: Mercury is below detectable levels for TDF, and average 0.11 ppm for coal; barium is also below detectable levels in TDF; cadmium, chromium, lead and manganese levels are comparable; zinc is present in higher concentrations in TDF than coal.

and metal content in order to optimize combustion. The standards for metals range from wire free, to relatively wire free to no wire removed. To meet the processing definition for combusting scrap tires, those materials should have the metal belts or wire removed consistent with the ASTM standard for relatively wire free. However, as noted in footnote 62, certain types of combustion units, such as cement kilns also use the wire in the tire as an ingredient to producing cement clinker. Therefore, we are soliciting comment on whether to adopt an additional definition for processing that would not require the metal belts or wire to be removed for those combustion units, such as cement kilns where the metals serve a useful purpose in the process of making clinker.

Syngas Produced from Gasification of Solid Waste. Although not specifically discussed in the ANPRM, synthesis gas (or syngas as it is commonly referred) produced from the gasification of solid waste is a material that can also meet the requirements of a fuel product produced from processing discarded non-hazardous secondary materials, provided the syngas has been adequately processed to remove contaminants.

A variety of solid waste streams are available for conversion to energy, including conversion through gasification technologies. Gasification is a chemical production process that converts carbonaceous material into a synthesis gas that can be used for energy production (or as a building block for other chemical manufacturing processes). In general, gasification systems are designed to react carbon-containing materials and steam at high temperatures to produce a synthesis gas composed mainly of carbon monoxide and hydrogen.

Gasification systems include two basic components. The first is the reactor or gasifier and the second is a gas cleanup or polishing system used to remove various contaminants from the raw (un-polished) synthesis gas. At a minimum, syngas cleanup generally includes removal of sulfur and metals. These two components work together producing a synthesis gas that can be used as a fuel in a combustion turbine.

Other Non-Hazardous Secondary Materials That are Processed. Sewage sludge can be processed into fuel pellets by biosolid drying that destroys pathogens and bacteria. Specifically, raw sewage sludge is moved to digesters where microbes decompose the organic solids. The resulting biosludge is pressed with wide fabric belts into sheets and water is removed. This sludge cake is then baked in "tumble-drying" ovens that destroy the pathogens and bacteria, removing any remaining water, and rotate the sludge into the final pelletized product.

Although we consider this to meet our definition of processing, the fuel pellets would still have to meet the legitimacy criteria to be considered a non-waste fuel. As discussed in section VII.C.5.f., we generally believe sewage sludge itself has contaminant levels that are higher than traditional fuels in use today, and thus would not satisfy the contaminant part of the legitimacy criteria.

Wood with lead-based paint that is shaved to remove the lead-based paint is another example of processing a discarded non-hazardous secondary material to produce a legitimate product; in this case, the underlying wood can be used as a non-waste, traditional fuel, and the lead-based paint can be safely disposed of or sent for lead recovery.

Coal fines, biomass, and other materials can be mixed and processed into pellets (or other forms) that have the consistency and handling characteristics of coal. For example, the K-Fuel process employs heat and pressure to transform coal into a cleaner, more efficient fuel by removing water and polluting impurities, thus increasing combustion efficiency. When applied to different lower-rank sub-bituminous and lignite coals, the K-Fuel process removes, on average, almost 70 percent of the coal's elemental mercury.[64]

In the examples above, we view the non-hazardous secondary materials to have been sufficiently processed to produce a fuel product that would not be a solid waste if it met the legitimacy criteria specified in section VII.D.6; however, as noted previously, the non-hazardous secondary materials would be considered solid wastes prior to processing and would be subject to appropriate federal, state, and local requirements.

d. Examples of Minimal Processing That Would Not Meet Proposed Definition of Processing.

Sewage sludge, and other non-hazardous secondary materials that have a high moisture content can be dewatered to effectively increase the Btu/lb of the material prior to burning as a fuel. We do not consider dewatering, by itself, to meet our definition of adequate or sufficient processing. For example, dewatering sewage sludge would likely be required processing as part of normal waste management activities (*e.g.,* prior to landfilling, or prior to burning the sludge for disposal in an incinerator). As such, we do not view this to be sufficient processing to convert discarded materials into non-waste fuel products.

Whole tires that are, for example, removed from waste tire piles or collected and managed pursuant to state tire collection programs, that are marketed to cement kilns or other industrial furnaces and used as fuels absent processing into what we consider processed TDF would be another example of insufficient processing to produce a non-waste fuel. However, we are also requesting comment on whether discarded materials that have been collected and that otherwise have not been processed (as defined in this proposal), should not be considered solid wastes if they are indistinguishable in all relevant aspects from a product (again, of course they must be legitimate), and such whole tires are marketed to cement kilns or other industrial furnaces and are used as fuels. For example, if a discarded non-hazardous secondary material that has not been processed based on our proposed definition can be shown to be no different than other non-waste fuels in use today, could that secondary material be considered a non-waste fuel/ingredient product even though it was discarded in the first instance? Commenters should provide the rationale supporting this approach.

e. Alternative Approach for Addressing Non-Hazardous Secondary Materials That Are Processed Into Non-Waste Fuels or Ingredients

As proposed, this particular provision is self-implementing, where each person would make the determination whether or not the non-hazardous secondary material has been "sufficiently processed" to produce a non-waste fuel or ingredient. The Agency believes that such an approach is appropriate considering the large number of non-hazardous secondary materials that are generated that may be processed into a non-waste fuel or ingredient. However, there is also the question of whether the definition of processing is sufficiently clear so that the regulated community can appropriately apply the definition. Therefore, the Agency is also considering and requests comment on whether this particular provision should be addressed through the non-waste determination process under § 241.3(c) (rather than as a self-implementing provision), such that the Agency would

[64] Evergreen Energy Company Web site. *http://www.evgenergy.com/k_fuel.php.*

consider and evaluate each type of processing activity on a case-by-case basis and approve it before the processed fuel or ingredient would be considered a non-waste fuel or ingredient. We also request comment on whether the Agency should promulgate a general rulemaking provision, similar to 40 CFR 260.20,[65] that would allow EPA to evaluate various processing activities generally, as opposed to on a site-by-site basis, such that the Agency would identify in the regulations which processing activities would produce a non-waste fuel or ingredient. While such an approach would put a much greater burden on EPA, it would also provide greater certainty to the regulated community as to which non-hazardous secondary materials have been sufficiently processed to produce a non-waste fuel or ingredient.

5. Non-Waste Determination Process

This proposal would establish a non-waste determination process that provides persons with an administrative process for receiving a formal determination from EPA that non-hazardous secondary material fuel that has not been managed within the control of the generator has not been discarded, and is indistinguishable in all relevant aspects from a fuel product, and thus, is not a solid waste when used as a fuel in a combustion unit. For example, a facility that is not affiliated with the generator of the non-hazardous secondary material fuel (and thus is "outside the control of the generator") can petition EPA to determine that the secondary material they burn as fuel is not a solid waste because the material has not been discarded and is indistinguishable in all relevant aspects from a fuel.

This proposed process would be voluntary. The non-waste determination process would require the petitioner to request such a case-specific non-waste determination from EPA. Any petition that is submitted to EPA that requests that the non-hazardous secondary material be considered a non-waste fuel would need to demonstrate that the material has not been discarded in the first instance, as well as describe how the non-hazardous secondary material satisfies the five proposed criteria outlined in § 241.3(c).

To demonstrate that the non-hazardous secondary material used a fuel has not been discarded in the first instance, the petitioner would need to demonstrate that the non-hazardous secondary material was not initially abandoned or thrown away by the generator of the material. It may not always be clear whether secondary materials would be considered to be discarded in the first instance. For example, secondary material retrieved from a landfill or tires retrieved from waste tire piles would be considered materials that are discarded in the first instance. We may not, however, consider used tires collected from tire dealerships and managed pursuant to state tire collection programs to be discarded in the first instance, depending on how they are managed.

After demonstrating that the material has not been discarded in the first instance, the petitioner must then demonstrate that the material is indistinguishable in all relevant aspects from a fuel product by showing that it satisfies the following five criteria: (1) Whether market participants handle the non-hazardous secondary material as a fuel rather than a waste; (2) whether the chemical and physical identify of the non-hazardous secondary material is comparable to a commercial fuel; (3) whether the capacity of the market would use the non-hazardous secondary material in a reasonable timeframe; (4) whether the constituents in the non-hazardous secondary material are released to the air, water or land from the point of generation to the combustion of the secondary material at levels comparable to what would otherwise be released from traditional fuels; and (5) other relevant factors.

Specifically, the first criterion for a non-waste determination is whether market participants handle the non-hazardous secondary material as a fuel rather than a solid waste. This would include consideration of likely markets for the non-hazardous secondary materials used as fuels (*e.g.,* based on the current positive value of the secondary material, stability of demand, and any contractual arrangements). This evaluation of market participation is a key from a fuel products standpoint rather than as negatively-valued wastes.

The second criterion for a non-waste determination is the chemical and physical identity of the non-hazardous secondary material and whether it is comparable to commercial fuels. This "identity principle" is a key factor that the Court of Appeals for the DC Circuit cited in Safe Foods in determining whether a material is indistinguishable from a product. It is important to note that the identity of a material can be comparable to a fuel product without being identical. However, to qualify for a non-waste determination, any differences between the non-hazardous secondary material in question and the commercial fuel should not be significant from a health and environmental risk perspective.

The third criterion for making a non-waste determination is the capacity of the market to use the non-hazardous secondary material as a fuel in combustion units in a reasonable time frame and ensure that it will not be abandoned. For the non-waste determination, a person will need to provide sufficient information about the non-hazardous secondary material and the market demand for it to demonstrate that such non-hazardous secondary materials will in fact be used as a fuel in combustion units in a reasonable time frame. EPA is not proposing to explicitly define "reasonable time frame" because such time frames could vary according to the non-hazardous secondary material and industry involved, and therefore determining this time frame should be made on a case-specific basis. However, the Agency solicits comments on whether it should propose a specific timeframe as part of this criterion.

The fourth criterion for a non-waste determination is whether the constituents in the non-hazardous secondary material fuels are released to the air, water, or land water at concentrations comparable to what would otherwise be released from traditional fuels. The process that the Agency would be considering would encompass the point of generation of the material, management and storage prior to use through combustion and the end use of the secondary material. The Agency believes that to the extent the constituents are an extension of the original secondary material, their release to the environment is a possible indicator of risk and discard. The Agency recognizes that combustion using traditional fuels also result in a certain level of release and, in evaluating this criterion, would not deny a non-waste determination if the increase in release is not significant from either a statistical or a health and environmental risk perspective. However, when relatively high levels of the constituents in the non-hazardous secondary material are released to the environment in looking from the point of generation of the secondary material to its combustion, then that may be an indication that the non-hazardous secondary material is not being handled as a commercial fuel.

The fifth and final criterion for a non-waste determination includes any other relevant factors that demonstrate that the non-hazardous secondary material is

[65] 40 CFR 260.20 allows any person to petition the Administrator of EPA to modify or revoke any provision of the hazardous waste rules. A similar "general rulemaking authority" could also be promulgated under RCRA subtitle D.

not a solid waste. This catch-all criterion is intended to allow the person to provide any case-specific information considered important and relevant in making the case that its non-hazardous secondary material used as a fuel in a combustion unit is not a solid waste.

Any non-hazardous secondary material used as a fuel must also satisfy our proposed legitimacy criteria in order to be considered a non-waste fuel. In order for a non-waste determination to be granted, the applicant must also therefore show that the material satisfies the proposed legitimacy criteria. We note that there is overlap between the legitimacy criteria and the five petition criteria discussed above. Thus, the same rationale used to demonstrate that the non-hazardous secondary material contains contaminants at levels comparable to traditional fuels in combination with the argument that such secondary material contains meaningful heating value can be used to satisfy petition criterion number 2 above. Similarly, the rationale used to demonstrate that the secondary material contains contaminants at levels comparable to traditional fuels can be used as the rationale for petition criterion number 4 above.

Non-Waste Determination Process. EPA is proposing that the process for the non-waste determination be similar to that for the solid waste variances found in § 260.33, except that such requests can only be addressed by EPA. In order to obtain a non-waste determination, a facility that manages non-hazardous secondary materials that would otherwise be regulated must apply to the Regional Administrator per the procedures described in proposed § 241.3(c). The application must address the relevant criteria discussed above. The Regional Administrator for the EPA Region where the facility combusting the material will evaluate the application and issue a draft notice tentatively granting or denying the application. Notification of this tentative decision will be provided by newspaper advertisement or radio broadcast in the locality where the recycler is located. The Regional Administrator will accept comment on the tentative decision for at least 30 days, and may also hold a public hearing upon request or at his discretion. The Regional Administrator will issue a final decision after receipt of comments and after the hearing (if any).

The Agency recognizes that many states have programs in place to make such determinations under state statute, and EPA would support the states to also make such determinations—that is, allow the states to act on behalf of EPA in making such case-specific determinations. Therefore, we are specifically soliciting comment as to whether the Agency can (and if so) should allow a state, for example, under a state's beneficial use program, to also make case-specific determinations without EPA's approval. We note that under the Revisions to the Definition of Solid Waste Rule (70 FR 64668), a non-waste determination may be granted by the state if the state is either authorized for this provision or if the following conditions are met: (1) The state determines the hazardous secondary material meets the applicable criteria for the non-waste determination; (2) the state requests that EPA review its determination; and (3) EPA approves the state determination. Should EPA allow this type of non-waste determination process in determining whether or not such non-hazardous secondary material is or is not a solid waste?

We note that states may submit these determinations on behalf of the petitioner for EPA to evaluate under the proposed non-waste determination criteria in proposed § 241.3(c)(1). If EPA determines through the petition process that the secondary material in the state determinations are not solid waste, then they would not be subject to the CAA section 129 standards, but instead would be subject to the CAA section 112 standards. Conversely, EPA may make a non-waste determination for non-hazardous secondary materials under the Federal regulations that still remains subject to the state solid waste regulations.

After a formal non-waste determination has been granted, if a change occurs that affects how a non-hazardous secondary material meets the relevant criteria contained in proposed § 241.3(c)(1), persons must re-apply to the Regional Administrator for a formal determination that the non-hazardous secondary material continues to meet the relevant criteria and is not discarded and therefore, not a solid waste.

6. Legitimacy Criteria

a. Legitimacy Criteria for Fuels. This notice is proposing that non-hazardous secondary materials used as fuels in combustion units must meet the legitimacy criteria specified in proposed § 241.3(d)(1) in order to be considered a non-waste fuel.[66] To meet the fuel legitimacy criteria, the non-hazardous secondary material must be handled as a valuable commodity, have a meaningful heating value and be used as a fuel in a combustion unit that recovers energy, and contain contaminants at levels comparable to those in traditional fuels which the combustion unit is designed to burn. These criteria are discussed below.

Manage as a Valuable Commodity. We are proposing to require that non-hazardous secondary materials used as fuels be managed as valuable commodities, including being stored for a reasonable timeframe. *See* proposed 241.3(d)(1)(i). Where there is an analogous fuel, the secondary material used as a fuel must be managed in a manner consistent with the management of the analogous fuel or otherwise be adequately contained so as to prevent releases to the environment. Where there is no analogous fuel, the secondary material must be adequately contained so as to prevent releases to the environment. An "analogous fuel" is a traditional fuel for which the non-hazardous secondary material substitutes and which serves the same function and has similar physical and chemical properties as the non-hazardous secondary material.

With respect to how long a non-hazardous secondary material can be stored before the material is not considered to be "managed as a valuable commodity," we are not specifying a specific timeframe, but requiring that the non-hazardous secondary material be stored for a reasonable timeframe. EPA is not proposing to specifically define "reasonable timeframe" because such timeframes could vary according to the non-hazardous secondary material and industry involved. On the other hand, the Agency also recognizes that with this flexibility, also comes the potential for non-hazardous secondary materials to be over-accumulated, which has been demonstrated to be a problem with hazardous secondary materials. It also could raise questions from an implementation standpoint since the question of "reasonable timeframe" may differ depending on each person's perspective. Thus, while we think that "reasonable timeframe" is an appropriate standard, considering the large number of non-hazardous materials that may be subject to this rule, and is flexible enough to allow accumulation to be cost-effective, the Agency solicits comment on whether it should define a specific timeframe or range of timeframes as part of this criterion. For example, one approach is to adopt the speculative accumulation provision (*see* 40 CFR 261.1(c)(8)) that

[66] We note, however, that non-hazardous secondary materials that satisfy the legitimacy criteria would still be considered a solid waste if they were discarded (abandoned, disposed of, or thrown away), unless they were processed into legitimate non-waste fuel products.

is defined in the hazardous waste regulations for determining how much secondary material must be recycled within a specific timeframe before the material is considered to have been discarded. Another approach would be for the Agency to determine how long fuels are generally held before they are used, and adopt such a standard. To this end, the Agency specifically solicits comment on the time period or range of time periods that fossil fuels are typically held before they are used as a fuel.

We are proposing that this legitimacy factor apply to both the nonhazardous secondary materials burned under the generator-controlled exclusion, as well as to materials that have been processed into a product fuel. For the generator-controlled provision, the non-hazardous secondary material must be managed as a valuable commodity upon generation through its end use as a fuel—that is, from the initial point of generation of the non-hazardous secondary material to the time it is actually burned as a fuel either on-site or at another facility that is under the control of the generator. For non-hazardous secondary materials that are processed to produce a fuel product, the processed material must be managed as a valuable product from the point that it is first produced through its end use. As noted previously, before the fuel product is produced, the non-hazardous secondary materials are solid wastes, and must comply with any federal, state, or local requirements.

This criterion requires that the non-hazardous secondary material be managed appropriately before its end use as a fuel. In EPA's view, a company will value non-hazardous secondary materials used as fuels that provide an important contribution and, therefore, will manage those secondary materials in a manner consistent with how it manages traditional fuels. If, on the other hand, a company does not manage the non-hazardous secondary material as it would a traditional fuel, that behavior may indicate that the non-hazardous secondary material is being discarded.

This factor addresses the management of non-hazardous secondary materials used as fuels in two distinct situations. The first situation is when the non-hazardous secondary material is analogous to a traditional fuel that otherwise could be burned. In this case, the non-hazardous secondary material must be managed prior to use as a fuel similarly to the way traditional fuels are managed or otherwise must be adequately contained so as to prevent releases to the environment. For example, for liquid non-hazardous secondary materials that are used as a fuel that are similar to liquid fossil fuels, the Agency would expect that such non-hazardous secondary materials would be managed in tanks or similar type devices to control the release of the secondary materials. The Agency would also expect that the types of controls that would typically be part of a tank or similar type device for fossil fuels would also be part of any tank system that is used to manage non-hazardous secondary material. The second situation the factor addresses is the case where there is no analogous traditional fuel that otherwise could be burned. This could be either because the process is designed around a particular non-hazardous secondary material fuel, or because physical or chemical differences between the secondary material and the traditional fuel are too significant for them to be considered "analogous."

Non-hazardous secondary materials that have significantly different physical or chemical properties when compared to traditional fuels would not be considered analogous even if they serve the same function because it may not be appropriate to manage them in the same way. In this situation, the non-hazardous secondary material would have to be adequately contained so as to prevent releases to the environment for this factor to be met. A non-hazardous secondary material is "adequately contained" if it is stored in a manner that both adequately prevents releases or other hazards to human health and the environment, considering the nature and toxicity of the secondary material.[67] We note that this definition of "contained" differs slightly from the description used in the DSW final rule preamble, which defined "contained" to mean placing the material in a unit that controls the movement of that material out of the unit.[68] We believe this slightly revised definition is appropriate because of the wide range of non-hazardous secondary materials that are used as fuels, some of which may not need to be "contained" in a dedicated storage unit. However, the Agency solicits comment on this aspect of this criterion, including whether a "contained" standard, which is a general performance standard, provides sufficient direction to the regulated community. Other approaches that EPA is considering is whether to provide a more specific definition of "contained" in the rules, or whether the Agency should include specific technical standards or limit the types of units that such non-hazardous secondary materials may be managed, in order for them to be considered to be "managed as a valuable commodity."

The definition of legitimacy in the DSW final rule required that this factor be considered, but not necessarily met. Under that rule, the Agency was aware of situations in which the contained factor is not met, but the secondary material is still being managed as a valuable commodity. One example given was a hazardous secondary material that is a powder-like material that is shipped in a woven super sack and stored in an indoor containment area that has an analogous raw material that is shipped and stored in drums. A strict reading of this factor may determine that the hazardous secondary material is not being managed in a manner consistent with the analogous secondary material even if the differences in management are not actually impacting the likelihood of a release.

This proposal includes a requirement for analogous raw materials to "* * * be managed in a manner consistent with the analogous fuel or otherwise be adequately contained to prevent releases to the environment" (§ 241.3(d)(1)(i)(B)). This is similar to the DSW final rule provision, but is also different in that the requirement in today's proposal has to be met (not just considered). Thus, today's proposal would require that this factor be met (not optional) because we believe that in all situations where the factors in § 241.3(d)(1)(i) are not met, the material would be discarded.

Meaningful Heating Value and Use as a Fuel. We are proposing that non-hazardous secondary materials have a meaningful heating value and be used as a fuel in a combustion unit that recovers energy. *See* proposed § 241.3(d)(1)(ii). We are proposing the requirement for the non-hazardous secondary material to be used as a fuel in a combustion unit that recovers energy for two reasons. First, we want to be clear that non-hazardous secondary materials having a meaningful heating value, but that are not burned in a combustion device specifically for energy recovery (*e.g.,* are burned in an incinerator) are solid wastes.[69] We recognize that incinerators and similar type units may accept non-hazardous secondary materials with a meaningful heating value and use that

[67] Examples of materials that are adequately contained would include liquid fuels stored in a tank. Examples of other hazards include tire fires resulting from improper storage of scrap tires (*see* section VII.D.2.).

[68] *See* October 30, 2008; 73 FR 64681.

[69] We note that incinerators that burn waste for purposes of destruction that have a waste heat recovery boiler would not be considered a combustion unit that satisfies this legitimacy criterion.

fuel value to limit the other types of fuels it needs to burn. However, the intent of an incinerator, and similar type units, is to destroy wastes, and thus, such non-hazardous secondary materials that are burned in such units are considered discarded, and thus a solid waste. Second, since these provisions are intended to apply only to non-hazardous secondary materials that have a specific end use (in this case, use as a fuel in an energy recovery device), we believe it appropriate to highlight that point by adding that restriction directly to this legitimacy criteria.

With respect to the requirement that the non-hazardous secondary material have a meaningful heating value, in the context of the hazardous waste regulations, EPA addressed this concept—that is, whether a hazardous secondary material has an adequate, meaningful heating value, in the so-called "comparable fuels" rule (63 FR 33781) by defining it with a benchmark Btu content of 5,000 Btu/lb. EPA has also previously stated that industrial furnaces (*i.e.,* cement kilns and industrial boilers) burning hazardous wastes with an energy value greater than 5,000 Btu/lb may generally be said to be burning for energy recovery; however, we have also indicated that hazardous wastes with a lower Btu content could conceivably be burned for energy recovery due to the devices' general efficiency of combustion. "Thus, the 5,000 Btu level is not an absolute measure of burning for energy recovery * * *" (*see* 62 FR 24251, May 2, 1997).

We believe these same concepts may also be appropriate in determining whether non-hazardous secondary materials have a meaningful heating value since traditional fuels have a range of heating values in general from 4,000 to 23,000 Btu/lb, and since we recognize that new technologies may be developed in the future that can cost-effectively produce energy from secondary materials with lower energy content. As a result, for purposes of meeting the legitimacy criteria for fuels, we would consider non-hazardous secondary materials with an energy value greater than 5,000 Btu/lb, as-fired, to have a meaningful heating value, and satisfy this legitimacy criterion. For facilities with energy recovery units that use non-hazardous secondary materials as fuels with an energy content lower than 5,000 Btu/lb, as fired, it may also be appropriate to allow a person to demonstrate that a meaningful heating value is derived from the non-hazardous secondary material if the energy recovery unit can cost-effectively recover meaningful energy from the non-hazardous secondary materials used as fuels. Factors that may be important in determining whether an energy recovery unit can cost-effectively recover energy from the non-hazardous secondary material include, but are not limited to, whether the facility encounters a cost savings due to not having to purchase significant amounts of traditional fuels they otherwise would need, whether they are purchasing the non-hazardous secondary material to use as a fuel, whether the secondary material they are burning can self-sustain combustion, and whether their operation produces energy that is sold for a profit (*e.g.,* a utility boiler that is dedicated to burning a specific type of non-hazardous secondary material that is below 5,000 Btu/lb could show that their operation produces electricity that is sold for a profit).

However, the Agency requests comment on whether it should promulgate a bright-line test for determining what is considered a meaningful heating value in an effort to provide greater certainty to both the regulated community and regulatory officials. For example, the Agency could establish 5,000 Btu/lb or some other value as the bright-line test. Commenters that suggest that the Agency establish a bright-line test should indicate what value the Agency should select, as well as the basis or rationale for selecting that value. We also request comment on whether we should identify a Btu/lb cutoff below which the Agency would assume that the non-hazardous secondary material is burned for destruction as opposed to energy recovery. Under this approach, non-hazardous secondary materials between this lower level and 5,000 Btu/lb (assuming there is a difference) could pass this criterion provided the facility demonstrates the energy recovery unit can cost-effectively recover meaningful energy from the non-hazardous secondary materials used as fuels.

EPA views this proposed legitimacy criterion to encompass the useful contribution and valuable product legitimacy factors used to evaluate hazardous secondary materials in the DSW final rule. In that rule, with respect to useful contribution, EPA said that legitimate recycling must involve a hazardous secondary material that provides a useful contribution to the recycling process or to a product of the recycling process. *See* § 260.43(b)(1). This factor expresses the principle that the non-hazardous secondary materials should contribute value to the manufacturing process—legitimate use is not occurring if the secondary materials being used do not add anything to the process. This factor is intended to prevent the practice of using secondary materials in a manufacturing operation simply as a means of disposing or discarding them. We believe that non-hazardous secondary materials that are used as a fuel in a combustion unit that have meaningful heating value provide a useful contribution.

With respect to the other mandatory legitimacy factor, the DSW final rule stated the recycling process must produce a valuable product or intermediate. The product or intermediate is valuable if it is (i) sold to a third party or (ii) used by the recycler or the generator as an effective substitute for a commercial product or as an ingredient or intermediate in an industrial process." *See* § 260.43(b)(2). This factor expresses the principle that the secondary material should be a material of value, as demonstrated by someone purchasing the material, or using it as an effective substitute for a commercial product that it would otherwise have to buy or obtain for its industrial process. We believe non-hazardous secondary materials that have meaningful heating value that are used as fuels in combustion units are valuable products since they would be replacing traditional fuels that otherwise would have to be burned.

Contaminant Levels. We are proposing a legitimacy criterion under which non-hazardous secondary materials used as fuels in combustion units must contain contaminants at levels that are comparable to those in traditional fuel products which the combustion unit is designed to burn (*e.g.,* cellulosic biomass, fossil fuels and their derivatives, as identified elsewhere in this preamble). *See* proposed § 241.3(d)(1)(iii). This criterion is important to ensure that a non-hazardous secondary material being used as a fuel is not being combusted or otherwise released to the environment wholly or in part for the purpose of disposing of or discarding of unwanted materials. Combustion of non-hazardous secondary material with elevated levels of contaminants results in the contaminants being discarded either through incineration, or by being released to the environment. We also believe that requiring that the secondary material have contaminants at levels comparable to traditional fuels would ensure that the burning of any secondary materials in combustion units will not have increased releases to the environment that could impact the health and environment of the local community. Thus, ensuring that the level of contaminants in the non-

hazardous secondary material is comparable would be the most protective of human health and the environment.

We are proposing to define the term "contaminants" to mean the HAP listed under CAA section 112(b), as well as the nine pollutants required to be regulated under CAA section 129. We believe this is reasonable because this legitimacy criterion is intended to ensure that materials are not being combusted as a means of disposing of them, so the health and environmental impacts of concern will be those resulting from air emissions, and the air emissions of concern identified in the CAA include the listed HAP, as well as the section 129 pollutants. However, the Agency solicits comment on whether the list of contaminants should be narrower or broader, or whether the Agency should look at other possible lists. In particular, since the Agency is determining which non-hazardous secondary materials are considered solid waste under RCRA, the Agency could consider the list of hazardous constituents promulgated in Appendix VIII of part 261, which is a list of hazardous constituents that have been shown in scientific studies to have toxic, carcinogenic, mutagenic or teratogenic effects on humans and other life forms.

In determining which traditional fuel(s) the owner or operator of the boiler unit would make a comparison with respect to contaminant levels, the Agency is proposing to allow any traditional fuel(s) that can be or is burned in the particular type of boiler. For example, if the boiler burns fuel oil, the level of contaminants to be compared would be the level of contaminants in fuel oil or other liquid traditional fuels that is or can be burned in such unit, while for gas-fired boilers, the level of contaminants in the non-hazardous secondary material fuels would be compared to natural gas. The Agency believes that this approach is most appropriate since the non-hazardous secondary material would be replacing the use of a particular type(s) of fuel. In addition, as discussed in the preamble to the proposed boiler MACT, boilers designed to combust different types of fuels (*e.g.,* coal vs. oil) cannot easily be modified to burn another fuel. Therefore it would not be appropriate to compare the contaminants in a secondary material that is to be combusted in a boiler designed to burn oil to the contaminant levels of coal.

EPA is not proposing to establish specific numerical maximum contaminant levels that a non-hazardous secondary material would have to meet, but rather the proposal allows the owner or operator to make the comparison based on information he has or can acquire regarding the level of contaminants found in traditional fuels he burns. However, the Agency solicits comment on whether it would be more appropriate for the Agency to establish bright-line levels of various contaminants in the various traditional fuels or a single set of contaminant levels that would apply regardless of the type of traditional fuel that is burned (as EPA promulgated in the hazardous waste Comparable Fuel Rule [70]) so that the regulated community would have certainty as to whether a particular non-hazardous secondary material met this legitimacy criterion.

The assessment of whether the non-hazardous secondary material has contaminants comparable to traditional fuel products is to be made by directly comparing the numerical contaminant levels in the non-hazardous secondary material to the contaminant levels in traditional fuels. In making this comparison, the Agency solicits comment on whether the comparison should be based upon the total level of contaminants, or on the level of contaminants per Btu of heat value. In either case, we believe that a direct numerical comparison is necessary since the level of contaminants must be comparable to the level of contaminants in traditional fuels. The Agency also solicits comments on how EPA should interpret "comparable." For example, should comparable mean the same as or lower, taking into consideration natural variations in sampling events?

The Agency recognizes that there may be instances where the contaminant levels in non-hazardous secondary materials may be somewhat higher than found in traditional fuels, but the resulting air pollutant emissions would be inconsequential in terms of risks to human health and the environment in relation to the burning of traditional fuel products and thus possibly not indicative of discard. Therefore, the Agency requests comment on whether, instead of requiring that contaminant levels in non-hazardous secondary materials be comparable to traditional fuels, the Agency should adopt a criterion under which contaminants in non-hazardous secondary material used as a fuel in combustion units could not be significantly higher in concentration than contaminants in traditional fuel products. Under such an approach, the Agency believes that a qualitative approach would be appropriate in determining whether such secondary materials contain "significantly higher concentrations of contaminants" compared to traditional fuels. That is, a contaminant concentration could be elevated without indicating the secondary material is discarded and without posing an unacceptable risk, and therefore, may not be considered "significantly higher" for the purposes of determining whether the non-hazardous secondary material is legitimately being burned as a fuel in a combustion unit.

The proposed rule contemplates that this legitimacy criterion must be met, rather than merely considered. The proposed legitimacy criterion is tailored specifically to the use of these non-hazardous secondary materials as fuels in combustion units. As a result, we believe that contaminant levels in secondary materials must be comparable to be legitimately used as a non-waste fuel product. We are therefore proposing that this legitimacy criterion be a requirement for the secondary material to be considered a legitimate fuel.

Since these requirements are self implementing in nature (*i.e.,* they do not need up front approval from the regulatory agency), facilities may choose to keep supporting documentation on-site in the event they are inspected by regulatory officials. EPA is not proposing to require that such documentation be maintained, since the proposed definition of non-hazardous solid waste is intended to be self-implementing. However, the Agency solicits comment on whether we should require owners and operators of combustion units to prepare and maintain documentation that this particular legitimacy criterion has been met.

b. Legitimacy Criteria for Ingredients. Today's notice is proposing that non-hazardous secondary materials used as ingredients in combustion units meet the legitimacy criteria specified in proposed 40 CFR 241.3(d)(2). An ingredient used in a combustion unit must be managed as a valuable commodity, provide a useful contribution, be used to produce a valuable product or intermediate, and must result in products that contain contaminants at levels that are comparable in concentration to those found in traditional products that are manufactured without the non-hazardous secondary material. These criteria are discussed below.

Managed as Valuable Commodities. We are proposing to require that non-hazardous secondary materials used as ingredients in combustion units be managed as valuable commodities and

[70] *See* 40 CFR 261.38 as an example of maximum contaminant levels EPA has promulgated to determine whether a material is a comparable fuel for purposes of EPA's subtitle C hazardous waste regulations.

be stored for a reasonable timeframe. *See* proposed 241.3(d)(2)(i). Where there is an analogous ingredient, the non-hazardous secondary material used as an ingredient must be managed in a manner consistent with the management of the analogous ingredient, or otherwise be adequately contained so as to prevent releases to the environment. Where there is no analogous ingredient, the non-hazardous secondary material must be adequately contained so as to prevent releases to the environment. An "analogous ingredient," is a manufacturing process ingredient for which the secondary material substitutes and which serves the same function and has similar physical and chemical properties as the non-hazardous secondary material.

We are proposing the same storage time and containment requirements that were discussed earlier for the legitimacy criteria for fuels, and are also proposing that this criterion be met. Consistent with the legitimacy criteria for fuels, this criterion addresses the management of non-hazardous secondary materials used as ingredients in two distinct situations. The first situation is when the non-hazardous secondary material is analogous to an ingredient that otherwise would be used in the production process. In this case, the non-hazardous secondary material should be managed prior to use as an ingredient similarly to the way analogous ingredients are managed in the course of normal manufacturing, or otherwise be adequately contained.

The second situation this criterion addresses is the case where there is no analogous ingredient that otherwise would be used in the production process. This could be either because the process is designed around a particular non-hazardous secondary material, or because physical or chemical differences between the non-hazardous secondary material and the ingredient are too significant for them to be considered "analogous." *See Managed as a Valuable Commodity* under the legitimacy criteria for fuels for additional discussion of this criterion, as well as the specific issues on which EPA is soliciting comment. That is, to the extent that changes are made to this criterion with respect to those non-hazardous secondary materials that are used as fuels, we would likewise make the same changes with respect to those non-hazardous secondary materials used as an ingredient, unless comments are submitted which explain, and provide appropriate data and information, on why this criterion should be different between those non-hazardous secondary materials that are used as a fuel and those that are used as ingredients.

Useful Contribution. We are proposing that the non-hazardous secondary materials used as ingredients in combustion units provide a useful contribution to the production/manufacturing process. *See* proposed 241.3(d)(2)(ii). A non-hazardous secondary material used as an ingredient in combustion systems provides a useful contribution if it contributes valuable ingredients to the production/manufacturing process or to the product or intermediate of the production/manufacturing process. This criterion is an essential element in the determination of legitimate use as an ingredient because legitimate use is not occurring if the non-hazardous secondary materials being added do not add anything to the process. This criterion is intended to prevent the practice of adding non-hazardous secondary materials to a manufacturing operation simply as a means of disposing of them, which EPA would consider sham recycling.

The ANPRM listed five ways in which a non-hazardous secondary material can add value and usefully contribute to a recycling process: (i) The secondary material contributes valuable ingredients to a product or intermediate; or (ii) replaces a catalyst or carrier in the recycling process; or (iii) is the source of a valuable constituent recovered in the recycling process; or (iv) is recovered or regenerated by the recycling process; or (v) is used as an effective substitute for a commercial product. Since today's proposal addresses non-hazardous secondary materials that are used as ingredients in combustion units, we believe that only items (i) and (v) are specifically relevant to our assessment of whether these non-hazardous secondary materials provide a useful contribution in combustion scenarios. We request comment, however, on whether this is correct, or whether the secondary materials we are assessing as ingredients can provide useful contribution in other ways.

For purposes of satisfying this proposed criterion, not every constituent or component of the non-hazardous secondary material has to make a contribution to the production/manufacturing activity. That is, non-hazardous secondary materials used as ingredients may contain some constituents that are needed in the manufacturing process, such as, for example, zinc in non-hazardous secondary materials that are used to produce zinc-containing micronutrient fertilizers, and satisfy this criterion (although we would also note that the constituents not directly contributing to the manufacturing process could still result in the material failing the contaminant part of the legitimacy criteria). The Agency is not defining quantitatively how much of the non-hazardous secondary material needs to provide a useful contribution for this criterion to be met, since we believe that defining such a level would be difficult and is likely to be different, depending on the non-hazardous secondary material. The Agency recognizes, however, that this could be an issue if persons argue that a material is being legitimately used as an ingredient, but in fact, only a small amount or percentage of it is used. Because of the differences in the emission standards that the non-hazardous secondary material would be subject to—between CAA section 112 and 129, persons may argue that such non-hazardous secondary materials are not wastes, when in fact, the operation is really discard—that is sham recycling. Therefore, the Agency solicits comment on whether the Agency should quantitatively define how much of the non-hazardous secondary material must provide a useful contribution, or alternatively, how much constituents or components in a non-hazardous secondary material there would need to be, before the material would not be considered to provide a useful contribution.

Valuable Product. We are proposing that the non-hazardous secondary materials used as ingredients in combustion units must be used to produce a valuable product or intermediate. *See* proposed 241.3(d)(2)(iii). The product or intermediate is valuable if it is (i) sold to a third party or (ii) used as an effective substitute for a commercial product or as an ingredient or intermediate in an industrial process.

This criterion expresses the principle that the product or intermediate of the manufacturing/production process should be a material of value, either to a third party who buys it from the manufacturer, or to the same manufacturer that subsequently uses it as a substitute for another material that it would otherwise have to buy or obtain for its industrial process. This criterion is an essential element of the concept of legitimate use of secondary materials as ingredients because legitimate use cannot be occurring if the product or intermediate is not of use to anyone and, therefore, has no real value. This criterion is intended to prevent the practice of running a non-hazardous secondary material through an industrial process to make something

just for the purpose of avoiding the costs of disposal. Such a practice would be sham recycling.

One way that the use of the non-hazardous secondary material as an ingredient in the production/manufacturing process that involves a combustion unit can be shown to produce a valuable product would be to have documentation on the sale of the product to a third party. Such documentation could be in the form of receipts or contracts and agreements that establish the terms of the sale or transaction. This transaction could include money changing hands or, in other circumstances, may involve trade or barter. A manufacturer that has not yet arranged for the sale of its product to a third party could establish value by demonstrating that it can replace another product or intermediate that is available in the marketplace.

Production/manufacturing processes that use non-hazardous secondary materials as ingredients in combustion systems may produce outputs that are not sold to another party, but are instead used by the same manufacturer. These products or intermediates may be used as a feedstock in a manufacturing process, but have no established monetary value in the marketplace. Such products or intermediates would be considered to have intrinsic value, though demonstrating intrinsic value may be less straightforward than demonstrating value for products that are sold in the marketplace. Demonstrations of intrinsic value could involve showing that the product or intermediate of the production/manufacturing process replaces another material that would otherwise have to be purchased or could involve a showing that the non-hazardous secondary material meets specific product specifications or specific industry standards. Another approach could be to compare the non-hazardous secondary material's physical and chemical properties or efficacy for certain uses with those of comparable products or intermediates made from raw materials.

Some production/manufacturing processes that use non-hazardous secondary materials as ingredients in combustion systems may consist of multiple steps that may occur at separate facilities. In some cases, each processing step will yield a valuable product or intermediate. When each step in the process yields a valuable product or intermediate that is salable or usable in that form, the activity would conform to this criterion.

Contaminant Levels. We are proposing that the non-hazardous secondary material used as an ingredient must result in products that contain contaminants at levels that are comparable in concentration to those found in traditional products that are manufactured without the non-hazardous secondary material. *See* proposed § 241.3(d)(2)(iv). The term "contaminants" refers to constituents in non-hazardous secondary materials that will result in emissions of the air pollutants identified as HAP listed under CAA section 112(b) and the nine pollutants listed under CAA section 129(a)(4)) when such secondary materials are burned as fuel or used as ingredients, including those constituents that could generate products of incomplete combustion. The Agency requests comments on whether we should have a different definition of contaminants that applies specifically to ingredients. Since contaminant comparisons for the contaminant legitimacy criterion apply to a comparison of the products rather than to the secondary material, we request comment on whether a different list of contaminants should apply, or whether we should generically define contaminants to be constituents that may be a concern with respect to the product that is produced (*e.g.,* clinker).

The assessment of whether products produced from the use of non-hazardous secondary material ingredients in combustion units that have contaminants that are comparable in concentration to traditional products can be made by a comparison of contaminant levels in the ingredients themselves to traditional ingredients they are replacing, or by comparing the contaminant levels in the product itself with and without use of the non-hazardous secondary material ingredient.

The Agency recognizes that there may be instances where the contaminant levels in the products manufactured from non-hazardous secondary material ingredients may be somewhat higher than found in the traditional products that are manufactured without the non-hazardous secondary material, but the resulting concentrations would not be an indication of discard and would not pose a risk to human health and the environment. Therefore, the Agency requests comment on whether, instead of requiring that contaminant levels in products manufactured from secondary material ingredients be comparable in concentration, the Agency should adopt a criterion under which contaminants in the product could not be significantly higher than found in the traditional products that are manufactured without the non-hazardous secondary material. Under such an approach, the Agency believes that a qualitative approach would be appropriate in determining whether such products contain "significantly higher concentrations of contaminants." That is, a contaminant concentration could be elevated without indicating the secondary material is discarded and without posing an unacceptable risk, and therefore, may not be considered "significantly higher" for the purposes of determining whether the non-hazardous secondary material is legitimately used as an ingredient in a combustion unit.

Similar to fuels, we are proposing that the legitimacy criterion addressing contaminant levels in non-hazardous secondary materials used as an ingredient in combustion systems be one that must be met, as opposed to one that must only be considered. As we noted in the legitimacy criteria for fuels, this criterion is tailored specifically to the use of these non-hazardous secondary materials in combustion units, and thus, we do not believe that there are case-specific situations where this criterion could not be met, but the material would still be considered legitimately used as an ingredient.

E. Alternative Approach

In addition to the proposed approach described in Section VII.D., the Agency is identifying an alternative approach for consideration and comment. As explained below, this alternative approach, which is broader than the proposed solid waste definition discussed above, we believe could be constructed in a manner consistent with RCRA and relevant caselaw although it may raise important policy questions. This alternative may be adopted by the Agency in the final rule if warranted by information presented during the public comment period or otherwise available in the rulemaking record. Under this alternative, traditional fuels that we have identified earlier, which includes clean biomass, and that have been burned historically as fuels and managed as valuable products (as discussed in section VII.C.5.) would not be solid wastes. In addition, non-hazardous secondary materials used as fuels or ingredients are excluded from the definition of solid waste if they *both* remain within the control of the generator *and* meet the legitimacy criteria.

In contrast to the proposed approach described above, all other non-hazardous secondary materials that are burned as a fuel or used as an ingredient in the combustion process would be solid wastes subject to the CAA section 129 standards if burned in a combustion

unit. Also, all materials that result from processing of discarded non-hazardous secondary materials would be solid wastes. As with the proposed approach, wastes would include those secondary materials used as a fuel or ingredient not passing the legitimacy criteria, and those secondary materials used as a fuel that are managed outside the control of the generator. This solid waste designation would include materials, such as secondary wood products combusted on-site, coal refuse, and tires processed into TDF, on-spec used oil, and all secondary materials used as ingredients managed outside the control of the generator in combustion units. No petition process would be offered under this alternative.

We request comment on all aspects of this alternative. Comments are specifically requested related to the potential impact this alternative may have on traditional non-combustion recycling activities, potential changes in the quantity of non-hazardous secondary materials that may be landfilled, and any collateral regulatory impacts, such as the impact on the MACT floors proposed today for the Commercial and Industrial Solid Waste Incinerators if a significant number of additional sources are subject to that rule.

This alternative approach is closer to the views expressed by some commenters that any secondary material combusted for energy recovery is a solid waste and should be regulated under CAA section 129. Thus, only traditional fuels and clean biomass may be burned in a combustion unit under CAA section 112. These commenters believe that the combustion of non-hazardous secondary materials by definition constitutes discard, and therefore all such materials are solid wastes. They have also expressed concerns that section 129 mandates stringent requirements for emissions control, monitoring and reporting for all sources irrespective of size, while section 112 allows EPA discretion to treat smaller sources differently by setting standards based on generally available control technology for sources emitting less than 10 tons per year or more of any single HAP or 25 tons per year or more of any combination of HAPs (*i.e.* area sources). If non-hazardous secondary materials burned on site for energy recovery are excluded from the definition of solid waste, these commenters argue that many smaller facilities that burn such materials will not be subject to any significant pollution control, monitoring, or reporting requirements. As a result, they believe such an exclusion could have significant adverse health and welfare effects on communities across the country that are located near area sources burning such secondary materials on site for energy recovery.

We solicit comment on whether EPA should include such non-hazardous secondary materials as solid waste, and whether such a definition is consistent with or required by RCRA and/or the CAA. Further, as explained below, while we believe that the approach favored by the commenters may raise legal concerns as to the definition of "discard," as we have discussed previously and further discuss in this section of the preamble, we solicit comment on whether the Agency has the authority to regulate all non-hazardous secondary materials that are burned in combustion units either as a fuel or ingredient as solid wastes. In providing comments on this approach, we specifically request that commenters provide the basis for their recommended position in light of the existing case law on the issue of "discard."

Some commenters have also argued that, as more non-hazardous secondary materials would be subject to CAA section 129 standards when combusted, this option would help promote traditional recycling, while ensuring more stringent emissions standards under CAA section 129 for those sources that elect to continue to burn these secondary materials. Depending upon local disposal and virgin material costs, increased recycling may occur as a result of market adjustments in response to higher materials management costs.

EPA wishes to clarify, however, that simply because a waste has, or may have, value does not mean the material loses its status as a solid waste. *See API I,* 906 F.2d at 741 n.16; *United States* v. *ILCO Inc.,* 996 F.2d 1126, 1131–32 (11th Cir. 1993); *Owen Steel* v. *Browner,* 37 F.3d 146, 150 (4th Cir. 1994). Wastes may be used beneficially. Even assuming beneficial reuse takes place, therefore, a material once discarded cannot cease to be a waste solely by being beneficially reused. In the case of this rule, beneficial resuse would be, for example, use as a fuel—as opposed to incineration, where the material is combusted primarily to be destroyed.

It is also important to note that a secondary material could still be a waste even if it is recycled on site or under the control of the generator. *See* "API II," 216 F.3d at 55–58, where the DC Circuit overturned EPA's determination that certain recycled oil bearing wastewaters are wastes. The court overturned this decision and remanded it to EPA for a better explanation. Importantly for the rule we are considering today, the court neither accepted EPA's view nor the contrary industry view, noting that the relevant determination that had to be made was whether primary treatment of wastewater is simply a step in the act of discarding or the last step in a production process before discard. 213 F.3d at 57. The court rejected both EPA's and industry's views because they were only stated in broad generalities. Relevant for today's alternative approach, we note that oil bearing wastewaters discussed in API II were in fact recycled on-site, but that the court could not determine whether they were wastes or not. Clearly, the issue was not whether the recycling occurred on site, or even under the control of the generator. Rather, the relevant determination is whether the material is discarded or not.

To remedy the "on-site" problem raised by API II, EPA for this proposed rule also requires that for the material not to be a waste it must be a legitimate fuel or ingredient. This means, to summarize the legitimacy criteria very generally, if used as a fuel, it is handled as though it is a valuable product (loss must be minimal), it is a true fuel with legitimate heating value, and the material has comparable levels of contaminants to those contained in traditional fuels. In particular, if there are higher than comparable levels of contaminants, that would be an indication that the material is really a waste and it is being combusted to destroy the waste materials. If the material is used as an ingredient, under the proposed rule it must be managed as a valuable commodity, must provide a useful contribution to the production or manufacturing process, must be used to produce a valuable product or intermediate, and cannot result in products that contain contaminants that are not comparable to the concentrations found in traditional products. For details on the legitimacy requirement, *see* section VII.D.6, above. In fact, as noted below, EPA has determined, for purposes of this alternative approach, that certain secondary materials [*see* wood residuals and pulp and paper sludge below], even though they are recycled on-site or under the control of the generator, they are still considered solid wastes.

The key point regarding the legal basis of this alternative approach is that EPA is accounting for the likelihood that material recycled within a continuous industrial process by being burned for energy recovery or as an ingredient is not a solid waste. The alternative approach, accordingly, requires that the secondary material

material is *both* recycled under the control of the generator and complies with the legitimacy criteria to ensure that it is in fact not handled as a waste *and* is a truly beneficial fuel or ingredient product. An example of a material burned for energy recovery under the control of the generator and meeting the legitimacy requirements is on-spec used oil generated on-site and combusted in an industrial boiler.

With respect to other examples, such as pulp and paper sludge and wood manufacturing residuals burned on-site for energy recovery, the Agency may reach a different conclusion. Specifically, commenters to the ANPRM indicated that these materials are primarily composed of biomass and that emissions from burning these materials are essentially the same as emissions from burning other biomass fuels, such as bark or unadulterated wood (*see* section VII.C.5.). For purposes of the primary proposal, EPA has determined that wood residuals and pulp and paper sludge are not wastes based on limited contaminant data collected to date and the on-site use of the secondary material. However, for this alternative approach, for the reasons described below, EPA is proposing to classify these materials as solid waste.

This alternative acknowledges that for some categories of secondary materials, it is difficult to determine whether those materials may or may not be discarded. The DC Circuit has also acknowledged the ambiguity of the term "solid waste" under RCRA as applied to particular situations. Specifically, the court stated that "[the] term may be ambiguous as applied to some situations, but not as applied to others." ABR at 1056. Thus, there could be some secondary materials that are clearly legitimately recycled within a continuous industrial process and others that are less clear. EPA believes that wood residuals and pulp and paper sludges are just the kinds of materials that present this kind of ambiguity.

Based on information the Agency has received, pulp and paper sludges are generally used on-site by generators to fuel their boilers and are treated like valuable commodities. However, there appear to be questions with respect to contaminants in the sludges that give EPA pause as to whether the combustion of these materials is primarily a waste treatment activity—specifically because of levels of chlorine in pulp and paper sludge. The Agency has similar concerns with levels of formaldehyde in wood residuals.

Accordingly, EPA believes that with respect to contaminant levels the wood residuals and pulp and paper sludge present a situation in which reasonable persons can disagree as to whether they are discarded materials or not. EPA solicits comments on whether these secondary materials should be classified as wastes or non-wastes.

EPA believes that its formulation that secondary material recycled or reused legitimately under the control of the generator will cover all, or almost all, secondary material recycled or reused in a continuous industrial process. The Agency requests comment on the adequacy of this formulation and any data commenters may have indicating whether particular secondary materials that will fall within or outside of this framework and whether, and why, those materials are discarded or not.

Comments are specifically requested related to the potential impact this alternative may have on traditional non-combustion recycling activities and potential changes in the quantity of non-hazardous secondary materials that may be landfilled. In addition, we request comment as to whether this alternative approach should include a petition process that provides persons with an administrative process for a formal determination that their non-hazardous secondary material fuel or ingredient is indistinguishable in all relevant aspects from a fuel or ingredient, and thus is not discarded and not a solid waste.

EPA believes that an even more far reaching regulatory approach, as suggested by some comments, in which only traditional fuels are not solid wastes and all secondary materials burned for energy recovery or as an ingredient are considered discarded may not be legally acceptable in that the approach provides too broad a definition of solid waste in light of the RCRA case law on the definition of solid waste. Specifically, EPA is concerned about the case law holding that, the RCRA definition of solid waste does not extend to secondary material beneficially reused in a continuous industrial process, as that material has not been discarded and is not a solid waste. *See* "AMC I," 824 F.2d 1177 at 1190 in which the court stated that the term "discarded materials" could not include materials "* * * destined for beneficial reuse or recycling in a continuous process by the generating industry itself.'' *Accord, Association of Battery Recyclers* v. *EPA,* 208 F.3d 1047 (DC Cir. 2000) ("ABR"). The provisions under consideration in AMC I and ABR dealt specifically with material "reclaimed" in a continuous process—that is, material regenerated from a secondary material in a continuous process. It seems highly likely the courts would extend this same reasoning to secondary materials that are otherwise reused or recycled in a continuous industrial process, such as material used, or combusted, to recover energy or as an ingredient. Thus, EPA is hesitant to define all reused or recycled secondary materials as solid waste under RCRA.

F. Effect of Today's Proposal on Other Programs

The construct of this proposed rule for determining when non-hazardous secondary materials are legitimately burned as non-waste fuels or ingredients has applicability to the universe of facilities subject to CAA sections 112 and 129, as well as other rules and agency regulatory programs.

1. Clean Air Act

As discussed in Section IV, the CAA section 129 definition of solid waste incineration unit states that the term "solid waste" will have the meaning established by the Administrator of EPA under RCRA. Today's proposed rule would establish under RCRA which non-hazardous secondary materials constitute "solid waste." This proposed definition of "solid waste" has been used by EPA in its concurrent proposed CAA emissions standards for CISWI units (under CAA section 129) and boilers and process heaters (under CAA section 112). Any unit combusting "solid waste" under today's proposed definition would be regulated as a "solid waste incineration unit" under CAA section 129. If a non-hazardous secondary material is not a "solid waste" under the proposed definition and such material is burned as a legitimate fuel or used as a legitimate ingredient in a manufacturing process, the combustion unit would be regulated pursuant to CAA section 112 (by statute, a source cannot be regulated under both CAA sections 112 and 129).

2. Renewable Energy

This proposal may impact how some non-hazardous secondary materials could be used to help supply renewable energy to the U.S. and through state programs. Given the Congressional mandate for renewable energy, it is important to assess the impact of this proposed regulation on those programs. Congress has passed several laws, such as the Energy Independence and Security Act of 2007 (Pub. L. 110–140), that support the development and use of renewable sources of energy, both for power generation and for the production of transportation fuels. Qualified sources would include wind, solar, and geothermal power, but could also include power generated by the

combustion of biogenic materials, which may include some non-hazardous secondary materials burned for energy recovery. Biogenic materials are materials that result from the activity of living organisms. A number of non-hazardous secondary materials are partially or completely biogenic. For example, woody biomass contains recoverable energy and would be considered biogenic in origin. Energy from biogenic sources is generally preferable to fossil fuels.

In addition to these federal programs that may be impacted, Renewable Portfolio Standards (RPS) currently provide states with a mechanism to increase renewable energy generation using renewable energy sources (including biofuels) and a cost-effective, market-based approach. An RPS requires electric utilities and other retail electric providers to supply a specified minimum amount of customer load with electricity from eligible renewable energy sources. The goal of an RPS is to stimulate market and technology development so that, ultimately, renewable energy will be economically competitive with conventional forms of electric power. States create RPS programs because of the energy, environmental, and economic benefits of renewable energy and sometimes other clean energy approaches, such as energy efficiency and combined heat and power. Today's proposed rule determining which non-hazardous secondary materials constitute solid waste may impact the requirements for secondary materials that may be burned for energy generation under the RPS program.

3. Subtitle C Hazardous Waste Program

The result of this rulemaking effort will have no effect on the subtitle C Hazardous Waste Program. The RCRA subtitle C hazardous waste federal program has a long regulatory history in defining "solid waste" for purposes of the hazardous waste regulations. However, the 40 CFR 261.2 definition of solid waste explicitly applies only to wastes that also are hazardous for purposes of the subtitle C regulations (*see* 40 CFR 261.1(b)(1)). CAA section 129 also specifically excludes subtitle C units from coverage under that section. EPA emphasizes that it is not modifying or reopening its hazardous waste regulations; EPA does not intend to respond to any comments directed to those regulations.

RCRA section 7003 gives EPA the authority to compel actions to abate conditions that may present an "imminent and substantial endangerment" involving both solid and hazardous wastes. EPA uses this authority on a case-by-case basis. The Agency can determine in a specific factual context whether a secondary material which causes an endangerment is discarded. RCRA Sections 3007 and 3008 establish EPA's inspection and Federal enforcement authority to address violations of the Subtitle C hazardous waste regulations. Nothing in this proposed rule shall impact EPA's ability to act pursuant to RCRA sections 3007, 3008 and 7003. The proposed rule also does not limit or otherwise affect EPA's ability to pursue potentially responsible persons under section 107 of CERCLA for releases or threatened releases of hazardous substances.

VIII. State Authority

Subtitle D of RCRA establishes a framework for state, federal, and local government cooperation in controlling the management of non-hazardous solid waste. The federal role in this arrangement is to establish the overall regulatory direction, by providing minimum nationwide standards for protecting human health and the environment, and to provide technical assistance to states for planning and developing their own solid waste management practices. The actual planning and direct implementation of solid waste programs under RCRA subtitle D, however, remains largely a state and local function, and states have authority to devise programs to deal with state specific conditions and needs.

EPA has not promulgated detailed regulations of what is included in the definition of solid waste for the RCRA subtitle D (non-hazardous) programs. States have promulgated their own laws and regulations as to what constitutes solid waste and have interpreted those laws and regulations to determine what types of non-hazardous secondary material activities involve the management of a solid waste. Many states have a process or promulgated regulations to determine when these materials are wastes, and when they can be used beneficially and safely in products in commerce.

Through this rulemaking, EPA is articulating the narrow definition of which non-hazardous secondary materials are or are not solid waste when used as fuel for energy recovery or as ingredients in combustion units. We are not making solid waste determinations that cover other possible secondary material end uses.

A. Applicability of State Solid Waste Definitions and Beneficial Use Determinations

CAA Section 129 states that the term "solid waste" shall have the meaning "established by the Administrator pursuant to the Solid Waste Disposal Act" *Id.* at 7429(g)(6). Accordingly, the state's definitions of solid waste would not be applicable in determining whether the section 129 standards apply. Specifically, state determinations regarding a material's beneficial use that may exempt that non-hazardous secondary material from the state solid waste standards would not necessarily impact the status of that secondary material under EPA's solid waste definition as it relates to which combustion units are subject to the CAA section 129 standards, except perhaps as discussed in section VII.D.5, where we discuss a state's ability to submit, on behalf of the petitioner, a petition for EPA to evaluate under the proposed non-waste determination criteria.[71] Likewise, non-hazardous secondary materials that are exempted from being a solid waste by EPA's proposed rule, if finalized, would be exempt from the CAA section 129 standards, even though the state standards may define the non-hazardous secondary material as a solid waste.

The language in CAA section 129, however, may be interpreted to provide the Administrator with flexibility in determining the meaning of solid waste under that section. EPA is requesting comment on an option where, to determine applicability of the CAA section 129 requirements, the Agency would rely on a determination through a state's beneficial use program that certain secondary materials are or are not solid waste. Such state programs are meant to encourage the use of non-hazardous secondary materials, provided that the uses maintain the specified state's acceptable level of risk, protect human health and the environment, and are managed in accordance with the conditions of the determination. Generally, for a secondary material to be beneficially used and thus no longer a solid waste, it would have chemical and physical properties similar to the raw material it is replacing or, when incorporated into another product, its use would be beneficial to the final product. Relying on these beneficial use determinations

[71] If EPA determines through the petition process that the secondary materials in the state determinations are not solid waste per 40 CFR 241.3(c), then the units that burn such materials would not be subject to the CAA section 129 requirements.

would recognize state interests in defining solid waste in the context of their own solid waste program, as well as help to mitigate potential inconsistencies between federal and state solid waste determinations.

Consideration of this option, however, where the Agency could rely on determinations by a state's beneficial use program in deciding whether certain materials are solid wastes when used as fuels or ingredients in combustion units, must take into account the current legal rationale for defining solid waste under EPA authority. Specifically, the courts have held that a secondary material that has been discarded is a solid waste regardless of whether it may be reused at some time in the future and simply because a waste has, or may have, beneficial value does not mean the secondary material loses its status as a solid waste.[72]

See the ANPRM for this rulemaking for the complete discussion of case law pertaining to the solid waste definition (74 FR 51).

B. State Adoption of the Rulemaking

No federal approval procedures for state adoption of today's proposed rule are included in today's proposal under RCRA subtitle D. Although EPA does promulgate criteria for solid waste landfills and approves state municipal solid waste landfill permitting programs, RCRA does not provide EPA any additional authority to approve state programs beyond municipal solid waste. While states are not required to adopt today's rule, some states incorporate federal regulations by reference or have specific state statutory requirements that their state program can be no more stringent than the federal regulations. In those cases, EPA anticipates that the changes in today's rule will be adopted by these states, consistent with state laws and state administrative procedures.

IX. Costs and Benefits of the Proposed Rule

The value of any regulatory action is traditionally measured by the net change in social welfare that it generates. This action alone does not directly invoke any costs[73] or benefits. This proposal is being developed and published in conjunction with the upcoming Boiler MACT and CISWI proposed rules.[74] Costs to the regulated community and corresponding benefits to human health and the environment fall under the jurisdiction of these rules. As such, the Agency has not prepared a separate economic assessment in support of this proposal. However, we recognize that this action, as proposed, may affect various State materials management programs, and we are sensitive to these concerns. The Agency encourages comment on any potential direct impacts this action may have on State materials management programs.

The costs and benefits indirectly associated with this action are the corresponding impacts assessed in the regulatory impact analyses prepared in support of the CAA proposed rules. These independent regulatory impact analyses measure, among other factors, the estimated net change in social welfare associated with these actions. In the development of these analyses, EPA worked to ensure that the methodologies and data applied in these assessments captured appropriate RCRA related costs (*e.g.,* secondary material diversions). These assessments were designed to adhere to Agency and the Office of Management and Budget (OMB) guidelines and procedures. The Agency has also prepared a general executive summary document that addresses overall impacts of this rulemaking package. These documents are available in the docket established for today's action. The reader is encouraged to review and comment on all aspects of these documents.

X. Statutory and Executive Order Reviews

A. Executive Order 12866: Regulatory Planning and Review

Under Executive Order (EO) 12866 (58 FR 51735, October 4, 1993), this action is a "significant regulatory action." Pursuant to the terms of Executive Order 12866, the Agency, in conjunction with the Office of Management and Budget (OMB) has determined that this proposed rule is a significant regulatory action because it contains novel policy issues, as defined under part 3(f)(4) of the Order. Accordingly, EPA submitted this action to OMB for review under EO 12866. Any changes made in response to OMB recommendations have been documented in the docket for this action.

B. Paperwork Reduction Act

The information collection requirements in this proposed rule have been submitted for approval to the Office of Management and Budget (OMB) under the *Paperwork Reduction Act,* 44 U.S.C. 3501 *et seq.* The Information Collection Request (ICR) document prepared by EPA has been assigned EPA ICR number 2382.01.

This proposal establishes a voluntary non-waste determination petition process for materials identified as solid wastes. Facilities claiming this non-hazardous solid waste exclusion are required to seek approval from the Agency through the submission of a petition prior to operating under this exclusion. Sufficient information about the secondary material and the market demand for this material will be necessary to demonstrate that the non-hazardous secondary material will in fact be used as a fuel or ingredient in the combustion process. Specifically, the petition will need to contain information to assess the following criteria: (1) Whether market participants handle the non-hazardous secondary material as a fuel rather than a waste; (2) whether the chemical and physical identify of the non-hazardous secondary material is comparable to a commercial fuel; (3) whether the capacity of the market would use the non-hazardous secondary material in a reasonable timeframe; (4) whether the constituents in the non-hazardous secondary material are not discarded to the air, water or land from the point of generation through combustion of the secondary material at significantly higher levels from either a statistical or from a health and environmental risk perspective than would otherwise be released; and (5) other relevant factors.

The facility-level burden associated with this voluntary petition option is uncertain. However, we estimate an average total one-time burden of approximately 700 hours per facility, with a total cost per facility of approximately $71,400. The total number of facilities likely to take advantage of this option is undetermined, but we would expect that only a limited number of facilities may submit such a petition. The Agency requests comment on the number of petitions that are likely to be submitted to EPA for consideration. Burden is defined at 5 CFR 1320.3(b).

An agency may not conduct or sponsor, and a person is not required to respond to a collection of information unless it displays a currently valid OMB

[72] *See* AMC II, 907 F.2d at 1186; API I, 906 F.2d at 741 n.16; *United States* v. *ILCO* Inc., 996 F.2d at 1131–32; *Owen Steel* v. *Browner,* 37 F.3d at 150.

[73] Excluding minor administrative burden/cost (*e.g.* rule familiarization) and voluntary petition costs.

[74] National Emission Standards for Hazardous Air Pollutants for Area Sources: Industrial, Commercial, and Institutional Boilers; National Emission Standards for Hazardous Air Pollutants for Industrial/Commercial/Institutional Boilers and Process Heaters; and, Standards of Performance for New Stationary Sources and Emission Guidelines for Existing Sources: Commercial and Industrial Solid Waste Incineration (CISWI) Units.

control number. The OMB control numbers for EPA's regulations in 40 CFR are listed in 40 CFR part 9.

To comment on the Agency's need for this information, the accuracy of the provided burden estimates, and any suggested methods for minimizing respondent burden, EPA has established a public docket for this rule, which includes this ICR, under Docket ID number EPA–HQ–RCRA–2008–0329. Submit any comments related to the ICR to EPA and OMB. *See* the **ADDRESSES** section at the beginning of this notice for where to submit comments to EPA. Send comments to OMB at the Office of Information and Regulatory Affairs, Office of Management and Budget, 725 17th Street, NW., Washington, DC 20503, Attention: Desk Office for EPA. Since OMB is required to make a decision concerning the ICR between 30 and 60 days after June 4, 2010, a comment to OMB is best assured of having its full effect if OMB receives it by July 6, 2010. The final rule will respond to any OMB or public comments on the information collection requirements contained in this proposal.

C. Regulatory Flexibility Act

The Regulatory Flexibility Act (RFA) generally requires an agency to prepare a regulatory flexibility analysis of any rule subject to notice and comment rulemaking requirements under the Administrative Procedure Act or any other statute unless the agency certifies that the rule will not have a significant economic impact on a substantial number of small entities. Small entities include small businesses, small organizations, and small governmental jurisdictions.

For purposes of assessing the impacts of today's rule on small entities, small entity is defined as: (1) A small business, as defined by the Small Business Administration's (SBA) regulations at 13 CFR 121.201; (2) a small governmental jurisdiction that is a government of a city, county, town, school district or special district with a population of less than 50,000; and (3) a small organization that is any not-for-profit enterprise which is independently owned and operated and is not dominant in its field.

After considering the economic impacts of today's proposed rule on small entities, I certify that this action will not have a significant economic impact on a substantial number of small entities. No small entities are directly regulated by this proposed rule (*see* discussion above under costs and benefits). Small entities potentially affected indirectly by this action include: major source industrial, commercial, and institutional boilers and process heaters, area source industrial, commercial, and institutional boilers and commercial and industrial solid waste incineration units. We estimate that these units operate in approximately 50 different industry categories based on the NAICS three digit sector code level. These sectors include: crop production; forestry and logging; support activities for agriculture and forestry; oil and gas extraction; mining (except oil and gas); utilities; heavy and civil engineering construction; food manufacturing; beverage and tobacco product manufacturing; textile mills and textile product mills; wood product manufacturing; paper manufacturing; petroleum and coal products manufacturing; chemical manufacturing; plastics and rubber products manufacturing; nonmetallic mineral product manufacturing; primary metal manufacturing; fabricated metal product manufacturing; machinery manufacturing; computer and electronic product manufacturing; transportation equipment manufacturing; furniture and related product manufacturing; merchant wholesalers; motor vehicle and parts dealers; air, rail, and pipeline transportation; warehousing and storage; waste management and remediation services; educational services; hospitals; accommodation; repair and maintenance; and public administration. Any potential impacts to small entities under these and any other potentially affected sectors are addressed in the regulatory flexibility analysis prepared in support of the CAA proposed rules that are linked to this action.[75]

We have determined that, because no small entities are directly impacted by this proposed action, there will not be a significant economic impact on a substantial number of small entities. This determination is based on the findings, as discussed above.

Although this proposed rule will not have a significant economic impact on a substantial number of small entities, EPA nonetheless has tried to reduce the (indirect) impact of this rule on small entities through the careful and targeted identification of solid waste materials. We continue to be interested in the potential impacts of the proposed rule on small entities and welcome comments on issues related to such impacts.

D. Unfunded Mandates Reform Act

This proposed rule does not contain a Federal mandate that may result in expenditures of $100 million or more for State, local, and tribal governments, in the aggregate, or the private sector in any one year. Because this action is linked to the CAA rules (*see* footnote under section C), this rule alone will not result in significant economic impacts on States, local and tribal governments, in the aggregate, or the private sector in any one year. Thus, this rule is not subject to the requirements of sections 202 or 205 of UMRA.

This proposed rule is also not subject to the requirements of section 203 of UMRA because it contains no regulatory requirements that might significantly or uniquely affect small governments. As described above, this action alone does not result in unique effects, or significant economic impacts.

E. Executive Order 13132: Federalism

This action does not have federalism implications. It will not have substantial direct effects on the States, on the relationship between the national government and the States, or on the distribution of power and responsibilities among the various levels of government, as specified in Executive Order 13132. This action, independent of the CAA rules, as proposed (*see* footnote 81), will not result in substantial direct effects on the states. Furthermore, this action will not preempt state laws related to the affected materials. States will remain free to manage these materials as appropriate under their Subtitle D programs. Thus, Executive Order 13132 does not apply to this action.

Although we believe that this action, as proposed, will not result in substantial direct effects on the states, we are sensitive to the perceptions States may have of this action in regard to their solid waste management programs. On January 2, 2009 we published an ANPRM (Identification of Non-Hazardous Materials That Are Solid Waste) that presented the Agency's anticipated approach for this action. We received numerous comments on this ANPRM, many of which came from States. Furthermore, we have reached out to the States with various informational conference calls throughout the development of this proposal. .

In the spirit of Executive Order 13132, and consistent with EPA policy to promote communications between EPA

[75] National Emission Standards for Hazardous Air Pollutants for Area Sources: Industrial, Commercial, and Institutional Boilers; National Emission Standards for Hazardous Air Pollutants for Industrial/Commercial/Institutional Boilers and Process Heaters; and, Standards of Performance for New Stationary Sources and Emission Guidelines for Existing Sources: Commercial and Industrial Solid Waste Incineration (CISWI) Units.

and State and local governments, EPA specifically solicits comment on this proposed action from State and local officials.

F. Executive Order 13175: Consultation and Coordination With Indian Tribal Governments

Subject to the Executive Order 13175 (65 FR 67249, November 9, 2000) EPA may not issue a regulation that has tribal implications, that imposes substantial direct compliance costs, and that is not required by statute, unless the Federal government provides the funds necessary to pay the direct compliance costs incurred by tribal governments, or EPA consults with tribal officials early in the process of developing the proposed regulation and develops a tribal summary impact statement.

EPA has concluded that this action may have tribal implications. However, it will neither impose substantial direct compliance costs on tribal governments, nor preempt Tribal law. The proposed rule may have minor tribal implications to the extent that entities generating or burning solid wastes on tribal lands could be affected.

EPA consulted with tribal officials early in the process of developing this regulation to permit them to have meaningful and timely input into its development. EPA specifically solicits additional comment on this proposed action from tribal officials.

G. Executive Order 13045: Protection of Children From Environmental Health and Safety Risks

This action is not subject to EO 13045 (62 FR 19885, April 23, 1997) because it is not economically significant as defined in EO 12866, and because the Agency does not believe the environmental health or safety risks addressed by this action present a disproportionate risk to children. This action's health and risk assessments related to this action are contained in the support documents prepared for the CAA section 129 CISWI and section 112 boiler MACT proposed rules.

H. Executive Order 13211: Actions that Significantly Affect Energy Supply, Distribution or Usage

This action is not a "significant energy action" as defined in Executive Order 13211 (66 FR 28355 (May 22, 2001)), because it is not likely to have a significant adverse effect on the supply, distribution, or use of energy. This action, independent of the CAA rules, as proposed, is not expected to directly affect energy use or use patterns. Energy impacts resulting for the CAA (*see* rule identification in footnote 72) application of this action are assessed and discussed in the preambles and supporting materials for those rules.

I. National Technology Transfer Advancement Act

Section 12(d) of the National Technology Transfer and Advancement Act of 1995 ("NTTAA"), Public Law 104–113, 12(d) (15 U.S.C. 272 note) directs EPA to use voluntary consensus standards in its regulatory activities unless to do so would be inconsistent with applicable law or otherwise impractical. Voluntary consensus standards are technical standards (*e.g.,* materials specifications, test methods, sampling procedures, and business practices) that are developed or adopted by voluntary consensus standards bodies. NTTAA directs EPA to provide Congress, through OMB, explanations when the Agency decides not to use available and applicable voluntary consensus standards.

This proposed rulemaking does not involve technical standards. Therefore, EPA is not considering the use of any voluntary consensus standards.

J. Executive Order 12898: Federal Actions To Address Environmental Justice in Minority Populations and Low-Income Populations

Executive Order (EO) 12898 (59 FR 7629 (Feb. 16, 1994)) establishes federal executive policy on environmental justice. Its main provision directs federal agencies, to the greatest extent practicable and permitted by law, to make environmental justice part of their mission by identifying and addressing, as appropriate, disproportionately high and adverse human health or environmental effects of their programs, policies, and activities on minority populations and low-income populations in the United States.

EPA is evaluating the question of whether this proposed rule will or will not have disproportionately high and adverse human health or environmental effects on minority or low-income populations. We have completed preliminary environmental justice analyses, in conjunction with the Boiler MACT and CISWI proposed rules (*see* section IV.A.). These preliminary environmental justice analyses are compiled in the "Review of Environmental Justice Impacts" for both this proposal and the Boiler MACT and CISWI proposed rules. This document is available in the docket for today's rule (Docket ID No: EPA–HQ–RCRA–2008–0329).

EPA is committed to addressing environmental justice concerns and has assumed a leadership role in environmental justice initiatives to enhance environmental quality for all citizens of the United States. The Agency's goals are to ensure that no segment of the population, regardless of race, color, national origin, income, or net worth, bears disproportionately high and adverse human health and environmental impacts as a result of EPA's policies, programs, and activities. Our goal is to ensure that all citizens live in clean and sustainable communities. In response to Executive Order 12898, and to the concerns voiced by many groups outside the Agency, EPA's Office of Solid Waste and Emergency Response (OSWER) formed an Environmental Justice Task Force to analyze the array of environmental justice issues specific to waste programs and to develop an overall strategy to identify and address these issues (OSWER Directive No. 9200.3–17).

The Environmental Justice analysis in today's proposal includes two main parts: (1) Demographic analysis and environmental impacts; and (2) outreach.

Demographics Analysis and Environmental Impacts

For this proposal, the demographic analysis focuses on the management of secondary materials that have been proposed to be solid waste under this proposed rule (versus the emissions from the combustion of the non-hazardous secondary materials which will be covered in the Boiler MACT and CISWI proposed rules). Specifically, the analysis focuses on the populations around the facilities accepting non-hazardous secondary materials that under the proposal would be considered to be solid waste. These wastes would be diverted from units previously combusting materials in accordance with the CAA section 112 standards for non-wastes according to today's proposed rulemaking. The analysis includes a demographic evaluation (focusing on the presence of low-income and minority populations) and possible impacts associated with solid waste being sent to municipal waste combustors and landfills (which are projected to receive the majority of the diverted materials as assessed by the impacts of the CISWI and Boiler MACT proposed rules using the least cost approach). The analysis also covers additional diversion implications. The assessment includes impacts on the abatement of scrap tire piles, stockpiling of secondary materials, and the disposal of used oil not in compliance with applicable standards.

The impacts of the new proposed emissions standards are included in the

Boiler MACT and CISWI proposed rules. The analysis in those proposals includes the following efforts: identification of sources, identification of demographic characteristics near sources, evaluation of area wide air quality, estimation of Boiler MACT/CISWI emission reductions of HAPs from the proposed standards and work practices.

Outreach

The outreach aspect of the environmental justice analysis will help stakeholders participate in the rulemaking process and build a dialog during the comment period for the proposed rule. The first step in the outreach process took place at the EPA Community Engagement in Rulemaking Roundtable Discussion in New Orleans, LA on January 28, 2010. This discussion was held concurrently with the National Environmental Justice Advisory Council public meeting. At the roundtable meeting, the basics of the advanced notice of proposed rulemaking were discussed, including how it interacts with EPA's upcoming CAA section 112 and section 129 rulemakings, and provided an educational forum to bring together EPA technical experts, community leaders, nonprofit groups, and others to discuss key themes of the proposed rulemaking. Based on the results of the roundtable meeting, the Agency developed an approach for public participation and outreach during the comment period for the proposal (including planned forums to discuss the proposed rules and/or learn more about environmental impacts of the rule). The activities associated with the outreach are posted at *http://www.epa.gov/waste/nonhaz/definition.htm.*

List of Subjects in 40 CFR Part 241

Environmental protection, Air pollution control, Waste treatment and disposal.

Dated: April 29, 2010.

Lisa P. Jackson,

Administrator.

For the reasons stated in the preamble, title 40, chapter I of the Code of Federal Regulations, is proposed to be amended by adding part 241 to read as follows:

PART 241—SOLID WASTES USED AS FUELS OR INGREDIENTS IN COMBUSTION UNITS

Subpart A—General

Sec.

241.1 Purpose.
241.2 Definitions.

Subpart B—Identification of Non-Hazardous Secondary Materials That Are Solid Wastes When Used as Fuels or Ingredients in Combustion Units

241.3 Standards and procedures for identification of non-hazardous secondary materials that are solid wastes when used as fuels or ingredients in combustion units.

Authority: 42 U.S.C. 6903, 6912, 7429.

Subpart A—General

§ 241.1 Purpose.

This part identifies the requirements and procedures for the identification of solid wastes used as fuels or ingredients in combustion units under section 1004 of the Resource Conservation and Recovery Act and section 129 of the Clean Air Act.

§ 241.2 Definitions.

For the purposes of this subpart:

Contained means the non-hazardous secondary material is stored in a manner that both adequately prevents releases or other hazards to human health and the environment considering the nature and toxicity of the material.

Contaminants means any constituent in non-hazardous secondary materials that will result in emissions of the air pollutants identified in CAA section 112(b) and the nine pollutants listed under CAA section 129(a)(4)) when such secondary materials are burned as fuel or used as ingredients, including those constituents that could generate products of incomplete combustion.

Control means the power to direct the policies of the facility, whether by the ownership of stock, voting rights, or otherwise, except that contractors who operate facilities on behalf of a different person as defined in this section shall not be deemed to "control" such facilities.

Generating facility means all contiguous property owned, leased, or otherwise controlled by the non-hazardous secondary material generator.

Intermediate product means a finished product traded usually among producers or suppliers rather than end users.

Non-hazardous secondary material means a secondary material that, when discarded, would not be identified as a hazardous waste under part 261 of this chapter.

Person is defined as an individual, trust, firm, joint stock company, Federal agency, corporation (including government corporation), partnership, association, State, municipality, commission, political subdivision of a state, or any interstate body.

Processing means any operations that transform discarded non-hazardous secondary material into a new fuel or new ingredient product. Minimal operations, such as operations that result only in modifying the size of the material by shredding, do not constitute processing for purposes of this definition. Processing includes, but is not limited to, operations that: remove or destroy contaminants; significantly improve the fuel characteristics of the material, *e.g.,* sizing or drying the material in combination with other operations; chemically improve the as-fired energy content; and improve the ingredient characteristics.

Secondary material means any material that is not the primary product of a manufacturing or commercial process, and can include post-consumer material, off-specification commercial chemical products or manufacturing chemical intermediates, post-industrial material, and scrap.

Solid waste means the term solid waste as defined in 40 CFR 258.2.

Within control of the generator means that the non-hazardous secondary material is generated and burned in combustion units at the generating facility; or that such material is generated and burned in combustion units at different facilities, if the facility combusting the material is controlled by the generator; or if both the generating facility and the facility combusting the material are under control of the same person as defined in this section.

Subpart B—Identification of Non-Hazardous Secondary Materials That Are Solid Wastes When Used as Fuels or Ingredients in Combustion Units

§ 241.3 Standards and procedures for identification of non-hazardous secondary materials that are solid wastes when used as fuels or ingredients in combustion units.

(a) Except as provided in paragraph (b) of this section, non-hazardous secondary materials that are combusted are solid wastes, unless a petition is submitted to, and a determination granted by, the Regional Administrator pursuant to paragraph (c) of this section. The criteria to be addressed in the petition, as well as the process for making the non-waste determination, are specified in paragraph (c) of this section.

(b) The following non-hazardous secondary materials are not solid wastes when combusted:

(1) Non-hazardous secondary materials used as a fuel in a combustion unit that remains within the control of the generator (as defined in § 241.2) and that meets the legitimacy criteria specified in paragraph (d)(1) of this section.

(2) Non-hazardous secondary materials used as an ingredient in a combustion unit and that meets the legitimacy criteria specified in paragraph (d)(2) of this section.

(3) Fuel or ingredient products that have undergone processing (as defined in § 241.2) from discarded non-hazardous secondary materials and that are used as fuels or ingredients in a combustion unit, and that meet the legitimacy criteria specified in paragraph (d)(1) of this section, with respect to fuels, and paragraph (d)(2) of this section, with respect to ingredients.

(c) The Administrator may grant a non-waste determination that a non-hazardous secondary material used as a fuel is not discarded and therefore not a solid waste when combusted. The criteria and process for making such non-waste determinations includes the following:

(1) Submittal of an application to the Regional Administrator for the EPA Region where the facility combusting the non-hazardous secondary material is located by an applicant for a determination that the non-hazardous secondary material, even though it has been transferred to a third party, has not been discarded and is indistinguishable in all relevant aspects from a product fuel. The determination will be based on whether the non-hazardous secondary material has been discarded, is a legitimate fuel as specified in paragraph (d)(1) of this section and on the following criteria:

(i) Whether market participants treat the non-hazardous secondary material as a fuel rather than a solid waste;

(ii) Whether the chemical and physical identity of the non-hazardous secondary material is comparable to commercial fuels;

(iii) Whether the non-hazardous secondary material will be used in a reasonable time frame given the state of the market;

(iv) Whether the constituents in the non-hazardous secondary material are released to the air, water or land from the point of generation to the combustion of the secondary material at levels comparable to what would otherwise be released from traditional fuels; and

(v) Other relevant factors.

(2) The Regional Administrator will evaluate the application based on the following procedures:

(i) The applicant must apply to the Regional Administrator for the non-waste determination addressing the relevant criteria in paragraphs (c)(1)(i) through (v) of this section.

(ii) The Regional Administrator will evaluate the application and issue a draft notice tentatively granting or denying the application. Notification of this tentative decision will be published in a newspaper advertisement or radio broadcast in the locality where the facility combusting the non-hazardous secondary material is located, and be made available on EPA's Web site.

(iii) The Regional Administrator will accept comment on the tentative decision for at least 30 days, and may also hold a public hearing upon request or at his discretion. The Regional Administrator will issue a final decision after receipt of comments and after the hearing (if any).

(iv) If a change occurs that affects how a non-hazardous secondary material meets the relevant criteria contained in paragraphs (c)(1)(i) through (v) of this section after a formal non-waste determination has been granted, the applicant must re-apply to the Regional Administrator for a formal determination that the non-hazardous secondary material continues to meet the relevant criteria and is not discarded and is thus not a solid waste.

(d) Legitimacy criteria for non-hazardous secondary materials.

(1) Legitimacy criteria for non-hazardous secondary materials used as fuels in combustion units include the following:

(i) The non-hazardous secondary material must be managed as a valuable commodity based on the following factors:

(A) The storage of the non-hazardous secondary material prior to use must not exceed reasonable time frames;

(B) Where there is an analogous fuel, the non-hazardous secondary material must be managed in a manner consistent with the analogous fuel or otherwise be adequately contained to prevent releases to the environment;

(C) If there is no analogous fuel, the non-hazardous secondary material must be adequately contained so as to prevent releases to the environment;

(ii) The non-hazardous secondary material must have a meaningful heating value and be used as a fuel in a combustion unit that recovers energy.

(iii) The non-hazardous secondary material must contain contaminants at levels comparable or lower to those in traditional fuels which the combustion unit is designed to burn. Such comparison is to be based on a direct comparison of the contaminant levels in the non-hazardous secondary material to the traditional fuel itself.

(2) Legitimacy criteria for non-hazardous secondary materials used as an ingredient in combustion units include the following:

(i) The non-hazardous secondary material used as an ingredient must be managed as a valuable commodity based on the following factors:

(A) The storage of the non-hazardous secondary material prior to use must not exceed reasonable time frames;

(B) Where there is an analogous ingredient, the non-hazardous secondary material must be managed in a manner consistent with the analogous ingredient or otherwise be adequately contained to prevent releases to the environment;

(C) If there is no analogous ingredient, the non-hazardous secondary material must be adequately contained to prevent releases to the environment;

(ii) The non-hazardous secondary material used as an ingredient must provide a useful contribution to the production or manufacturing process. The secondary material provides a useful contribution if it contributes a valuable ingredient to the product or intermediate or is an effective substitute for a commercial product.

(iii) The non-hazardous secondary material used as an ingredient must be used to produce a valuable product or intermediate. The product or intermediate is valuable if:

(A) The material is sold to a third party, or

(B) The material is used as an effective substitute for a commercial product or as an ingredient or intermediate in an industrial process.

(iv) The non-hazardous secondary material used as an ingredient must result in products that contain contaminants at levels that are comparable or lower in concentration to those found in traditional products that are manufactured without the non-hazardous secondary material.

[FR Doc. 2010–10837 Filed 6–3–10; 8:45 am]

BILLING CODE 6560–50–P

Federal Register

Friday,
June 4, 2010

Part III

Environmental Protection Agency

40 CFR Part 63

National Emission Standards for Hazardous Air Pollutants for Area Sources: Industrial, Commercial, and Institutional Boilers; Proposed Rule

ENVIRONMENTAL PROTECTION AGENCY

40 CFR Part 63

[EPA–HQ–OAR–2006–0790; FRL–9148–3]

RIN 2060–AM44

National Emission Standards for Hazardous Air Pollutants for Area Sources: Industrial, Commercial, and Institutional Boilers

AGENCY: Environmental Protection Agency (EPA).

ACTION: Proposed rule.

SUMMARY: EPA is proposing national emission standards for control of hazardous air pollutants from two area source categories: Industrial boilers and commercial and institutional boilers. The proposed emission standards for control of mercury emissions from coal-fired area source boilers and the proposed emission standards for control of polycyclic organic matter emissions from all area source boilers are based on the maximum achievable control technology. The proposed emission standards for control of mercury emissions from biomass-fired and oil-fired area source boilers and for other hazardous air pollutants are based on EPA's proposed determination as to what constitutes the generally available control technology or management practices.

EPA is also clarifying that gas-fired area source boilers are not needed to meet the 90 percent requirement of section 112(c)(3) of the Clean Air Act.

Finally, we are also proposing that existing area source facilities with an affected boiler with a designed heat input capacity of 10 million Btu per hour or greater undergo an energy assessment on the boiler system to identify cost-effective energy conservation measures.

DATES: Comments must be received on or before July 19, 2010. Under the Paperwork Reduction Act, comments on the information collection provisions are best assured of having full effect if the Office of Management and Budget (OMB) receives a copy of your comments on or before July 6, 2010.

Public Hearing. We will hold a public hearing concerning this proposed rule and the interrelated proposed Boiler major source, CISWI, and RCRA rules, discussed in this proposal and published in the proposed rules section of today's **Federal Register**, on June 21, 2010. Persons requesting to speak at a public hearing must contact EPA by June 14, 2010.

ADDRESSES: Submit your comments, identified by Docket ID No. EPA–HQ–OAR–2006–0790, by one of the following methods:

- *http://www.regulations.gov.* Follow the instructions for submitting comments.
- *http://www.epa.gov/oar/docket.html.* Follow the instructions for submitting comments on the EPA Air and Radiation Docket Web site.
- *E-mail:* Comments may be sent by electronic mail (e-mail) to *a-and-r-docket@epa.gov,* Attention Docket ID No. EPA–HQ–OAR–2006–0790.
- *Fax:* Fax your comments to: (202) 566–9744, Docket ID No. EPA–HQ–OAR–2006–0790.
- *Mail:* Send your comments to: EPA Docket Center (EPA/DC), Environmental Protection Agency, Mailcode: 2822T, 1200 Pennsylvania Ave., NW., Washington, DC 20460, Docket ID No. EPA–HQ–OAR–2006–0790. Please include a total of two copies. In addition, please mail a copy of your comments on the information collection provisions to the Office of Information and Regulatory Affairs, OMB, Attn: Desk Officer for EPA, 725 17th St., NW., Washington, DC 20503.
- *Hand Delivery or Courier:* Deliver your comments to: EPA Docket Center (EPA/DC), EPA West, Room 3334, 1301 Constitution Ave., NW., Washington, DC 20460. Attention Docket ID No. EPA–HQ–OAR–2006–0790. Such deliveries are only accepted during the Docket's normal hours of operation (8:30 a.m. to 4:30 p.m., Monday through Friday, excluding legal holiday), and special arrangements should be made for deliveries of boxed information.

Instructions: All submissions must include agency name and docket number or Regulatory Information Number (RIN) for this rulemaking. All comments will be posted without change and may be made available online at *http://www.regulations.gov,* including any personal information provided, unless the comment includes information claimed to be confidential business information (CBI) or other information whose disclosure is restricted by statute. Do not submit information that you consider to be CBI or otherwise protected through *http://www.regulations.gov* or e-mail. The *http://www.regulations.gov* Web site is an "anonymous access" system, which means EPA will not know your identity or contact information unless you provide it in the body of your comment. If you send an e-mail comment directly to EPA without going through *http://www.regulations.gov,* your e-mail address will be automatically captured and included as part of the comment that is placed in the public docket and made available on the Internet. If you submit an electronic comment, EPA recommends that you include your name and other contact information in the body of your comment and with any disk or CD–ROM you submit. If EPA cannot read your comment due to technical difficulties and cannot contact you for clarification, EPA may not be able to consider your comment. Electronic files should avoid the use of special characters, any form of encryption, and be free of any defects or viruses.

Public Hearing: We will hold a public hearing concerning this proposed rule on June 21, 2010. Persons interested in presenting oral testimony at the hearing should contact Ms. Pamela Garrett, Energy Strategies Group, at (919) 541–7966 by June 14, 2010. The public hearing will be held in the Washington, DC area at a location and time that will be posted at the following Web site: *http://www.epa.gov/airquality/combustion.* Please refer to this Web site to confirm the date of the public hearing as well. If no one requests to speak at the public hearing by June 14, 2010 then the public hearing will be cancelled and a notification of cancellation posted on the following Web site: *http://www.epa.gov/airquality/combustion.*

Docket: All documents in the docket are listed in the *http://www.regulations.gov* index. Although listed in the index, some information is not publicly available, *e.g.,* CBI or other information whose disclosure is restricted by statute. Certain other material, such as copyrighted material, will be publicly available only in hard copy form. Publicly available docket materials are available either electronically in *http://www.regulations.gov* or in hard copy at the EPA Docket Center, Room 3334, 1301 Constitution Ave., NW., Washington, DC. The Public Reading Room is open from 8:30 a.m. to 4:30 p.m., Monday through Friday, excluding legal holidays. The telephone number for the Public Reading Room is (202) 566–1744, and the telephone number for the Air Docket is (202) 566–1742.

FOR FURTHER INFORMATION CONTACT: Ms. Mary Johnson, Energy Strategies Group, Sector Policies and Programs Division, (D243–01), Office of Air Quality Planning and Standards, U.S. Environmental Protection Agency, Research Triangle Park, North Carolina 27711; telephone number: (919) 541–5025; Fax number (919) 541–5450; e-mail address: *johnson.mary@epa.gov.*

SUPPLEMENTARY INFORMATION:

Outline. The information in this preamble is organized as follows:

I. General Information
A. Does this action apply to me?
B. What should I consider as I prepare my comments to EPA?
C. Where can I get a copy of this document?
D. When would a public hearing occur?
II. Background Information
A. What is the statutory authority and regulatory approach for this proposed rule?
B. What source categories are affected by the proposed standards?
C. What is the relationship between this proposed rule and other related national emission standards?
D. How did we gather information for this proposed rule?
E. How are the area source boiler HAP addressed by this proposed rule?
III. Clarification of the Source Category List
IV. Summary of This Proposed Rule
A. Do the proposed standards apply to my source?
B. What is the affected source?
C. When must I comply with the proposed standards?
D. What are the proposed MACT and GACT standards?
E. What are the Startup, Shutdown, and Malfunction (SSM) requirements?
F. What are the proposed initial compliance requirements?
G. What are the proposed continuous compliance requirements?
H. What are the proposed notification, recordkeeping and reporting requirements?
I. Submission of Emissions Test Results to EPA
V. Rationale of This Proposed Rule
A. How did EPA determine which pollution sources would be regulated under this proposed rule?
B. How did EPA determine the subcategories for this proposed rule?
C. What surrogates are we using?
D. How did EPA determine the proposed standards for existing units?
1. MACT Analysis for Mercury From Coal-Fired Boilers and POM
2. GACT Determination for Existing Area Source Boilers
E. How did EPA determine the proposed standards for new units?
1. MACT Analysis for Mercury From Coal-Fired Boilers and POM
2. GACT Determination for New Area Source Boilers
F. How did we select the compliance requirements?
G. Alternative MACT Standards for Consideration
H. How did we decide to exempt these area source categories from title V permitting requirements?
VI. Summary of the Impacts of This Proposed Rule
A. What are the air impacts?
B. What are the cost impacts?
C. What are the economic impacts?
D. What are the social costs and benefits of this proposed rule?
E. What are the water and solid waste impacts?
F. What are the energy impacts?
VII. Relationship of This Proposed Action to CAA Section 112(c)(6)
VIII. Statutory and Executive Order Review
A. Executive Order 12866: Regulatory Planning and Review
B. Paperwork Reduction Act
C. Regulatory Flexibility Act (RFA)
D. Unfunded Mandates Reform Act of 1995
E. Executive Order 13132: Federalism
F. Executive Order 13175: Consultation and Coordination With Indian Tribal Governments
G. Executive Order 13045: Protection of Children From Environmental Health Risks and Safety Risks
H. Executive Order 13211: Actions Concerning Regulations That Significantly Affect Energy Supply, Distribution, or Use
I. National Technology Transfer and Advancement Act
J. Executive Order 12898: Federal Actions To Address Environmental Justice in Minority Populations and Low-Income Populations

I. General Information

A. Does this action apply to me?

The regulated categories and entities potentially affected by the proposed standards include:

Category	NAICS Code [1]	Examples of regulated entities
Any area source facility using a boiler as defined in this proposed rule.	321	Wood product manufacturing.
	11	Agriculture, greenhouses.
	311	Food manufacturing.
	327	Nonmetallic mineral product manufacturing.
	422	Wholesale trade, nondurable goods.
	531	Real estate.
	611	Educational services.
	813	Religious, civic, professional, and similar organizations.
	92	Public administration.
	722	Food services and drinking places.
	62	Health care and social assistance.

[1] North American Industry Classification System.

This table is not intended to be exhaustive, but rather provides a guide for readers regarding entities likely to be affected by this action. To determine whether your facility, company, business, organization, etc., would be regulated by this action, you should examine the applicability criteria in 40 CFR 63.11193 of subpart JJJJJJ (National Emission Standards for Hazardous Air Pollutants for Industrial, Commercial, and Institutional Boilers Area Sources). If you have any questions regarding the applicability of this action to a particular entity, consult either the delegated regulatory authority for the entity or your EPA regional representative as listed in 40 CFR 63.13 of subpart A (General Provisions).

B. What should I consider as I prepare my comments to EPA?

Do not submit information containing CBI to EPA through *http://www.regulations.gov* or e-mail. Send or deliver information identified as CBI only to the following address: Roberto Morales, OAQPS Document Control Officer (C404–02), Office of Air Quality Planning and Standards, U.S. Environmental Protection Agency, Research Triangle Park, North Carolina 27711, Attention: Docket ID EPA–HQ–OAR–2006–0790. Clearly mark the part or all of the information that you claim to be CBI. For CBI information in a disk or CD–ROM that you mail to EPA, mark the outside of the disk or CD–ROM as CBI and then identify electronically within the disk or CD–ROM the specific information that is claimed as CBI. In addition to one complete version of the comment that includes information claimed as CBI, a copy of the comment that does not contain the information claimed as CBI must be submitted for inclusion in the public docket. Information so marked will not be disclosed except in accordance with procedures set forth in 40 CFR part 2.

C. Where can I get a copy of this document?

In addition to being available in the docket, an electronic copy of this proposed action will also be available on the Worldwide Web (WWW) through the Technology Transfer Network (TTN). Following signature, a copy of the proposed action will be posted on the TTN's policy and guidance page for newly proposed or promulgated rules at the following address: *http://www.epa.gov/ttn/oarpg/.* The TTN provides information and technology exchange in various areas of air pollution control.

D. When would a public hearing occur?

We will hold a public hearing concerning this proposed rule on June 21, 2010. Persons interested in presenting oral testimony at the hearing should contact Ms. Pamela Garrett, Energy Strategies Group, at (919) 541–7966 by June 14, 2010. The public hearing will be held in the Washington, DC area at a location and time that will be posted at the following Web site: *http://www.epa.gov/airquality/combustion.* Please refer to this Web site to confirm the date of the public hearing as well. If no one requests to speak at the public hearing by June 14, 2010 then the public hearing will be cancelled and a notification of cancellation posted on the following Web site: *http://www.epa.gov/airquality/combustion.*

II. Background Information

A. What is the statutory authority and regulatory approach for this proposed rule?

Section 112(d) of the Clean Air Act (CAA) requires us to establish NESHAP for both major and area sources of hazardous air pollutants (HAP) that are listed for regulation under CAA section 112(c). A major source emits or has the potential to emit 10 tons per year (tpy) or more of any single HAP or 25 tpy or more of any combination of HAP. An area source is a HAP-emitting stationary source that is not a major source.

CAA section 112(k)(3)(B) calls for EPA to identify at least 30 HAP which, as the result of emissions from area sources, pose the greatest threat to public health in the largest number of urban areas. EPA implemented this provision in 1999 in the Integrated Urban Air Toxics Strategy (Strategy), (64 FR 38715, July 19, 1999). Specifically, in the Strategy, EPA identified 30 HAP that pose the greatest potential health threat in urban areas, and these HAP are referred to as the "30 urban HAP." CAA section 112(c)(3) requires EPA to list sufficient categories or subcategories of area sources to ensure that area sources representing 90 percent of the emissions of the 30 urban HAP are subject to regulation. A primary goal of the Strategy is to achieve a 75 percent reduction in cancer incidence attributable to HAP emitted from stationary sources.

Under CAA section 112(d)(5), we may elect to promulgate standards or requirements for area sources "which provide for the use of generally available control technologies or management practices ('GACT') by such sources to reduce emissions of hazardous air pollutants." Additional information on GACT is found in the Senate report on the legislation (Senate Report Number 101–228, December 20, 1989), which describes GACT as:

> * * * methods, practices and techniques which are commercially available and appropriate for application by the sources in the category considering economic impacts and the technical capabilities of the firms to operate and maintain the emissions control systems.

Consistent with the legislative history, we can consider costs and economic impacts in determining GACT, which is particularly important when developing regulations for source categories that may have many small businesses such as these.

Determining what constitutes GACT involves considering the control technologies and management practices that are generally available to the area sources in the source category. We also consider the standards applicable to major sources in the analogous source category to determine if the control technologies and management practices are transferable and generally available to area sources. In appropriate circumstances, we may also consider technologies and practices at area and major sources in similar categories to determine whether such technologies and practices could be considered generally available for the area source categories at issue. Finally, as noted above, in determining GACT for a particular area source category, we consider the costs and economic impacts of available control technologies and management practices on that category.

While GACT may be a basis for standards for most types of HAP emitted from area sources, CAA section 112(c)(6) requires that EPA list categories and subcategories of sources assuring that sources accounting for not less than 90 percent of the aggregate emissions of each of the seven specified hazardous air pollutants (HAP) are subject to standards under section 112(d)(2) or (d)(4). The seven HAP specified in section 112(c)(6) are as follows: alkylated lead compounds, polycyclic organic matter, hexachlorobenzene, mercury, polychlorinated biphenyls, 2,3,7,9-tetrachlorodibenzofurans, and 2,3,7,8-tetrachloridibenzo-p-dioxin.

The CAA section 112(c)(6) list of source categories currently includes industrial coal combustion, industrial oil combustion, industrial wood combustion, commercial coal combustion, commercial oil combustion, and commercial wood combustion. See 63 FR 17849. We listed these source categories under CAA section 112(c)(6) based on the source categories' contribution of mercury and polycyclic organic matter (POM). In the documentation for the CAA section 112(c)(6) listing, the commercial fuel combustion categories included institutional fuel combustion (see "1990 Emissions Inventory of Section 112(c)(6) Pollutants, Final Report," April 1998). As discussed in greater detail below, we re-examine the emission inventory and the need to address categories under CAA section 112(c)(6) during the rule development process. Based on this re-examination, we now believe we will only need to address the coal-fueled portion of these categories under CAA section 112(c)(6).

With this proposed rule and the major source boilers rule, we currently believe that we have subjected to regulation or proposed to regulate at least 90 percent of the 1990 section 112(c)(6) emissions inventory for mercury. Coal-fired area source boilers represent approximately 4.3 percent of the 1990 section 112(c)(6) emissions inventory for mercury. In contrast, biomass- and oil-fired boilers represent approximately 0.34 percent. Consequently, we are proposing to regulate coal-fired boilers under MACT because we need these sources to meet the 90 percent requirement for mercury in section 112(c)(6). We are proposing to regulate biomass-fired and oil-fired types of boilers under GACT to meet the 90 percent requirement for mercury in section 112(c)(3).

We solicit comment on whether we should nevertheless establish MACT-based mercury emission standards for all boilers in this category. In your comments, please explain the basis for your position and provide any supporting documentation.

The "maximum achievable control technology" or "MACT" regulation required by CAA section 112(d)(2) or (4) can be based on the emissions reductions achievable through application of measures, processes, methods, systems, or techniques including, but not limited to: (1)

Reducing the volume of, or eliminating emissions of, such pollutants through process changes, substitutions of materials, or other modifications; (2) enclosing systems or processes to eliminate emissions; (3) collecting, capturing, or treating such pollutants when released from a process, stack, storage or fugitive emission point; (4) design, equipment, work practices, or operational standards as provided in CAA section 112(h); or (5) a combination of the above.

The MACT floor is the minimum control level allowed for NESHAP and is defined under CAA section 112(d)(3). For new sources, MACT based standards cannot be less stringent than the emission control achieved in practice by the best-controlled similar source, as determined by the Administrator. The MACT based standards for existing sources can be less stringent than standards for new sources, but they cannot be less stringent than the average emission limitation achieved by the best performing 12 percent of existing sources in the category or subcategory (for which the Administrator has emission information) for source categories and subcategories with 30 or more sources, or the best performing 5 sources for categories and subcategories with fewer than 30 sources (CAA section 112(d)(3)(A) and (B)).

Although emission standards are often structured in terms of numerical emissions limits, alternative approaches are sometimes necessary and authorized pursuant to CAA section 112. For example, in some cases, physically measuring emissions from a source may be not practicable due to technological and economic limitations. CAA section 112(h) authorizes the Administrator to promulgate a design, equipment, work practice, or operational standard, or combination thereof, consistent with the provisions of CAA sections 112(d) or (f), in those cases where, in the judgment of the Administrator, it is not feasible to prescribe or enforce an emission standard. CAA section 112(h)(2) provides that the phrase "not feasible to prescribe or enforce an emission standard" includes the situation in which the Administrator determines that * * * the application of measurement methodology to a particular class of sources is not practicable due to technological and economic limitations.

As noted above, we listed industrial coal combustion, industrial oil combustion, industrial wood combustion, commercial coal combustion, commercial oil combustion, and commercial wood combustion under CAA section 112(c)(6) based on the source categories' contribution of mercury and polycyclic organic matter (POM). We listed these same categories under section 112(c)(3) for their contribution of mercury, arsenic, beryllium, cadmium, lead, chromium, manganese, nickel, polycyclic organic matter (POM) (as 7–PAH (polynuclear aromatic hydrocarbons)), ethylene dioxide, and polychlorinated biphenyls (PCB).

We have developed proposed standards to reflect the application of MACT for mercury from coal-fired area source boilers and POM from all area source boilers under section 112(c)(6) and have applied GACT for the other pollutants noted above.

B. What source categories are affected by the proposed standards?

The source categories affected by the proposed standards are industrial boilers and commercial and institutional boilers. Both source categories were included in the area source list published on July 19, 1999 (64 FR 38721). The inclusion of these two source categories on the CAA section 112(c)(3) area source category list is based on 1990 emissions data, as EPA used 1990 as the baseline year for that listing. We describe above the pollutants that formed the basis of the listings.

This proposed rule would apply to all existing and new industrial boilers, institutional boilers, and commercial boilers located at area sources. The industrial boiler source category includes boilers used in manufacturing, processing, mining, refining, or any other industry. The commercial boiler source category includes boilers used in commercial establishments such as stores/malls, laundries, apartments, restaurants, and hotels/motels. The institutional boiler source category includes boilers used in medical centers (*e.g.,* hospitals, clinics, nursing homes), educational and religious facilities (*e.g.,* schools, universities, churches), and municipal buildings (*e.g.,* courthouses, prisons).

Boiler means an enclosed combustion device having the primary purpose of recovering thermal energy in the form of steam or hot water.

C. What is the relationship between this proposed rule and other related national emission standards?

This proposed rule regulates industrial boilers and institutional/commercial boilers that are area sources of HAP. Today, in a parallel action, a NESHAP for industrial, commercial, and institutional boilers located at major sources is being proposed reflecting application of MACT. The major source NESHAP regulates emissions of particulate matter (PM) (as a surrogate for non-mercury metals), mercury, hydrogen chloride (HCl)(as a surrogate for acid gases), dioxins/furans, and carbon monoxide (CO) (as a surrogate for non-dioxin organic HAP) from existing and new major source boilers.

This proposed rule covers boilers located at area source facilities. In addition to the major source MACT for boilers being issued today and this rule, the Agency is also issuing emission standards today pursuant to CAA section 129 for commercial and industrial solid waste incineration units. In a parallel action, EPA is proposing a solid waste definition rulemaking pursuant to Subtitle D of RCRA. That action is relevant to this proceeding because if an industrial, commercial, or institutional unit located at an area source combusts secondary materials that are "solid waste," as that term is defined by the Administrator under RCRA, those units would be subject to section 129 of the CAA, not section 112.

As background, in 2007, the United States Court of Appeals for the District of Columbia Circuit (DC Circuit) vacated the CISWI Definitions Rule, which EPA issued pursuant to CAA section 129. The court found that the definitions in that rule were inconsistent with the CAA. Specifically, the Court held that the term "solid waste incineration unit" in CAA Section 129(g)(1) "unambiguously include[s] among the incineration units subject to its standards any facility that combusts any commercial or industrial solid waste material at all—subject to the four statutory exceptions identified [in CAA Section 129(g)(1)]." *NRDC* v. *EPA,* 489 F.3d at 1257–58.

Based on the information available to the Agency, we believe that the boilers that are subject to this area source rule combust coal, oil, and biomass. EPA does not believe that the boilers subject to this rule combust any non-hazardous secondary materials, whether they are considered a solid waste or not. If you are aware of such materials being combusted at these boilers, please provide specific information as to the type of secondary material being combusted and at what type of facilities and in what quantities. If the final form of the solid waste definition results in any secondary materials being considered solid waste it will be important to know whether units are burning those materials, because that would result in those units becoming incinerators subject to regulation under

section 129 and no longer being considered boilers.

There is also another CAA regulation that is relevant in that they apply to some of the affected sources in this rule. For example, in 1986, EPA codified new source performance standards (NSPS) for industrial, commercial, and institutional boilers (40 CFR part 60, subparts Db and Dc) and revised portions of them in 1999 and 2006. The NSPS regulates emissions of PM, sulfur dioxide (SO_2), and nitrogen oxides from boilers constructed after June 19, 1984. Sources subject to the NSPS that are located at area source facilities are also subject to this proposed rule because this proposed rule regulates HAP. In developing this proposal, we have streamlined the monitoring and recordkeeping requirements to avoid duplicating requirements in the NSPS.

D. How did we gather information for this proposed rule?

We gathered information for this proposed rule from States' boiler inspection lists, company Web sites, published literature, State permits, current State and Federal regulations, and from an Information Collection Request (ICR) conducted for the major source NESHAP.

We developed an initial nationwide population of area source boilers based on boiler inspector databases from 13 States. The boiler inspector databases include steam boilers that are required to be inspected for safety or insurance purposes. We classified the area source boilers to NAICS codes based on the "name" of the facility at which the boiler was located. However, many of the boilers in the boiler inspector database could not be readily assigned to an NAICS code.

We reviewed State and other Federal regulations that apply to the area sources in the source categories for information concerning existing HAP emission control approaches. For example, as noted above, the NSPS for small industrial, commercial, and institutional boilers in 40 CFR part 60, subpart Dc apply to boilers at some area sources. Similarly, permit requirements established by the Ohio, Illinois, Vermont, New Hampshire, and Maine air regulatory agencies apply to some area sources. We also reviewed standards for boilers at major sources that would be appropriate for and transferable to boilers at area sources. For example, we determined that management practices, such as, annual tune-ups and operator training applicable to major source boilers are equally feasible for boilers at area sources.

E. How are the area source boiler HAP addressed by this proposed rule?

As explained above, industrial coal combustion, industrial oil combustion, industrial wood combustion, commercial coal combustion, commercial oil combustion, and commercial wood combustion are listed under CAA section 112(c)(6) due to contributions of mercury and POM and these same categories are listed under CAA section 112(c)(3) for their contribution of mercury, arsenic, beryllium, cadmium, lead, chromium, manganese, nickel, POM, ethylene dioxide, and PCB.

With respect to the 112(c)(3) pollutants, we used surrogates because, as explained below, it was not practical to establish individual standards for each specific HAP. We grouped the 112(c)(3) pollutants, which formed the basis for the listing of these two source categories, into three common groupings: mercury, non-mercury metallic HAP (arsenic, beryllium, cadmium, chromium, lead, manganese, and nickel), and organic HAP (POM, ethylene dichloride, and PCB). In general, the pollutants within each group have similar characteristics and can be controlled with the same techniques.

For the non-mercury metallic HAP, we selected PM as a surrogate. The inherent variability and unpredictability of the non-mercury metal HAP compositions and amounts in fuel has a material effect on the composition and amount of non-mercury metal HAP in the emissions from the boiler. As a result, establishing individual numerical emissions limits for each non-mercury HAP metal species is difficult given the level of uncertainty about the individual non-mercury metal HAP compositions of the fuels that will be combusted. An emission characteristic common to all boilers is that the non-mercury metal HAP are a component of the PM contained in the fly ash emitted from the boiler. A sufficient correlation exists between PM and non-mercury metallic HAP to rely on PM as a surrogate for these HAP and for their control. Therefore, the same control techniques that would be used to control the fly-ash PM will control non-mercury metallic HAP. Emissions limits established to achieve control of PM will also achieve control of non-mercury metal HAP. Furthermore, establishing separate standards for each individual HAP would impose costly and significantly more complex compliance and monitoring requirements and achieve little, if any, HAP emissions reductions beyond what would be achieved using the surrogate pollutant approach.

For organic HAP, we selected CO as a surrogate for organic compounds, including POM, emitted from the various fuels burned in boilers. The presence of CO is an indicator of incomplete combustion. A high level of CO in emissions is an indicator of incomplete combustion and, thus, a potential indication of elevated organic HAP emissions. Monitoring equipment for CO is readily available, which is not the case for organic HAP. Also, it is significantly easier and less expensive to measure and monitor CO emissions than to measure and monitor emissions of each individual organic HAP. We considered other surrogates, such as total hydrocarbon (THC), but lacked data on emissions and permit limits for area source boilers. Therefore, using CO as a surrogate for organic urban HAP is a reasonable approach because minimizing CO emissions will result in minimizing organic urban HAP emissions.

Based on these considerations, we are proposing GACT standards for PM (as a surrogate for the individual urban metal HAP), CO (as a surrogate pollutant for the individual urban organic HAP), and mercury from biomass-fired and oil-fired boilers. We are proposing MACT standards for mercury from coal-fired boilers and for POM from all boilers.

III. Clarification of the Source Category List

The Industrial Boilers and the Institutional/Commercial Boilers area source categories were listed under section 112(c)(3) of the CAA. EPA needs to establish emission standards for area source boilers for the following urban HAP in order to meet the section 112(c)(3) 90 percent requirement for these HAP: mercury, arsenic, beryllium, cadmium, lead, chromium, manganese, nickel, POM (as 7–PAH), ethylene dioxide, and PCB. Natural gas-fired area source boilers do not emit any of the urban HAP identified above. Therefore, regulation of gas-fired area source boilers is not necessary to meet the 90 percent requirement under section 112(c)(3) for these HAP. For the reason stated above, pursuant to section 112(c)(3) of the CAA, we are proposing emission standards for the above mentioned HAP for area source boilers fired by coal, oil, and wood, but not standards for boilers fired by natural gas.

IV. Summary of This Proposed Rule

A. Do the proposed standards apply to my source?

This proposed rule applies to you if you own or operate a boiler combusting coal, biomass, or oil located at an area source. The standards do not apply to boilers that are subject to another standard under 40 CFR part 63 or to a standard developed under CAA section 129.

This proposed rule applies to you if you own or operate a boiler combusting natural gas, located at an area source, which switches to combusting coal, biomass, or oil after the date of proposal.

B. What is the affected source?

The affected source is the collection of all existing boilers within a subcategory located at an area source facility or each new boiler located at an area source facility.

C. When must I comply with the proposed standards?

The owner or operator of an existing source would be required to comply with the rule no later than 3 years after the date of publication of the final rule in the **Federal Register**. The owner or operator of a new source would be required to comply upon the date of publication of the final rule in the **Federal Register** or startup of the facility, whichever is later.

D. What are the proposed MACT and GACT standards?

Emission standards expressed in the form of emission limits are being proposed for new and existing area source boilers. The proposed MACT emission limits for mercury and CO (as a surrogate for POM) are presented, along with the proposed GACT standards for PM (as a surrogate for urban metals), in Table 1 of this preamble.

TABLE 1—EMISSION LIMITS FOR AREA SOURCE BOILERS

[Pounds per million British thermal units heat input]

Source	Subcategory	Particulate matter (PM)	Mercury	Carbon monoxide (CO) (ppm)
New Boiler	Coal	0.03	3.0E–06	310 (@ 7% oxygen).
	Biomass	0.03		100 (@ 7% oxygen).
	Oil	0.03		1 (@ 3% oxygen).
Existing Boiler	Coal		3.0E–06	310 (@ 7% oxygen).
	Biomass			160 (@ 7% oxygen).
	Oil			2 (@ 3% oxygen).

The emission limits for existing area source boilers are only applicable to area source boilers that have a designed heat input capacity of 10 million British thermal units per hour (MMBtu/h) or greater. If your boiler burns at least 10 percent coal on a total fuel annual heat input basis, the boiler is in the coal fuel subcategory. If your boiler burns biomass or biomass in combination with a liquid or gaseous fuel, the unit is in the biomass subcategory. If your boiler burns oil, or oil in combination with a gaseous fuel, the unit is in the oil subcategory, except if the unit burns oil only during periods of gas curtailment.

As allowed under CAA section 112(h), a work practice standard is being proposed for existing area source boilers that are units with designed heat input capacity of less than 10 MMBtu/h. The work practice standard for existing small area source boilers requires the implementation of a tune-up program.

An additional standard is being proposed for existing area source facilities having an affected boiler with a designed heat input capacity of 10 MMBtu/h or greater that requires the performance of an energy assessment, by qualified personnel, on the boiler and the facility to identify cost-effective energy conservation measures.

E. What are the Startup, Shutdown, and Malfunction (SSM) requirements?

The United States Court of Appeals for the District of Columbia Circuit vacated portions of two provisions in EPA's CAA section 112 regulations governing the emissions of HAP during periods of startup, shutdown, and malfunction (SSM). *Sierra Club* v. *EPA,* 551 F.3d 1019 (D.C. Cir. 2008), *cert. denied, 2010 U.S. LEXIS 2265 (2010).* Specifically, the Court vacated the SSM exemption contained in 40 CFR 63.6(f)(1) and 40 CFR 63.6(h)(1), that are part of a regulation, commonly referred to as the "General Provisions Rule," that EPA promulgated under section 112 of the CAA. When incorporated into CAA Section 112(d) regulations for specific source categories, these two provisions exempt sources from the requirement to comply with the otherwise applicable CAA section 112(d) emission standard during periods of SSM.

Consistent with *Sierra Club* v. *EPA,* EPA has established standards in this rule that apply at all times. EPA has attempted to ensure that we have not incorporated into proposed regulatory language any provisions that are inappropriate, unnecessary, or redundant in the absence of an SSM exemption. We are specifically seeking comment on whether there are any such provisions that we have inadvertently incorporated or overlooked. We also request comment on whether there are additional provisions that should be added to regulatory text in light of the absence of an SSM exemption and provisions related to the SSM exemption (such as the SSM plan requirement and SSM recordkeeping and reporting provisions).

In establishing the standards in this rule, EPA has taken into account startup and shutdown periods and, for the reasons explained below, has not established different standards for those periods. The standards that we are proposing are daily or monthly averages. Based upon continuous emission monitoring data, obtained as part of the information collection effort for the major source boiler and process heater rulemaking, which included periods of startup and shutdown, over long averaging periods, startups and shutdowns will not affect the achievability of the standard. Boilers, especially solid fuel-fired boilers, do not normally startup and shutdown more than once per day. Thus, we are not establishing a separate emission standard for these periods because startup and shutdown are part of their routine operations and, therefore, are already addressed by the standards.

Periods of startup, normal operations, and shutdown are all predictable and routine aspects of a source's operations. However, by contrast, malfunction is

defined as a "sudden, infrequent, and not reasonably preventable failure of air pollution control and monitoring equipment, process equipment or a process to operate in a normal or usual manner * * *" (40 CFR 63.2). EPA has determined that malfunctions should not be viewed as a distinct operating mode and, therefore, any emissions that occur at such times do not need to be factored into development of CAA section 112(d) standards, which, once promulgated, apply at all times. It is reasonable to interpret section 112(d) as not requiring EPA to account for malfunctions in setting emissions standards. For example, we note that CAA section 112 uses the concept of "best performing" sources in defining MACT, the level of stringency that major source standards must meet. Applying the concept of "best performing" to a source that is malfunctioning presents significant difficulties. The goal of best performing sources is to operate in such a way as to avoid malfunctions of their units. Similarly, although standards for area sources are generally not required to be set based on "best performers," we believe that what is "generally available" should not be based on periods in which there is a "failure to operate."

Moreover, even if malfunctions were considered a distinct operating mode, we believe it would be impracticable to take malfunctions into account in setting CAA section 112(d) standards for area source boilers. As noted above, by definition, malfunctions are sudden and unexpected events and it would be difficult to set a standard that takes into account the myriad different types of malfunctions that can occur across all sources in the category. Moreover, malfunctions can vary in frequency, degree, and duration, further complicating standard setting.

In the event that a source fails to comply with the applicable CAA section 112(d) standards as a result of a malfunction event, EPA would determine an appropriate response based on, among other things, the good faith efforts of the source to minimize emissions during malfunction periods, including preventative and corrective actions, as well as root cause analyses to ascertain and rectify excess emissions. EPA would also consider whether the source's failure to comply with the CAA section 112(d) standard was, in fact, "sudden, infrequent, not reasonably preventable" and was not instead "caused in part by poor maintenance or careless operation." 40 CFR 63.2 (definition of malfunction).

F. What are the proposed initial compliance requirements?

For new and existing area source boilers with applicable emission limits, we are proposing that you must conduct initial stack tests or fuel analysis (for mercury) to determine compliance with the PM, mercury, and CO emission limits.

As part of the initial compliance demonstration, we are proposing that you must monitor specified operating parameters during the initial performance tests that demonstrate compliance with the PM and mercury emission limits for area source boilers with wet or dry scrubbers. The test average establishes your site-specific operating levels.

For owners or operators of existing area source boilers having a heat input capacity of less than 10 MMBtu/h, we are proposing that you must submit to the delegated authority or EPA, as appropriate, documentation that a tune-up was conducted.

For owners or operators of existing area source facilities having a boiler with a heat input capacity of 10 MMBtu/h or greater and subject to this rule, we are proposing that you submit to the delegated authority or EPA, as appropriate, documentation that the energy assessment was performed and the cost-effective energy conservation measures identified.

G. What are the proposed continuous compliance requirements?

If you demonstrate initial compliance with the emission limits by performance (stack) tests, we are proposing that you conduct stack tests on an annual basis. Furthermore, to demonstrate continuous compliance with the PM and mercury emission limits, we are proposing that you must monitor and comply with the applicable site-specific operating limits.

For area source boilers without wet scrubbers that must comply with the PM and mercury emission limits, we are proposing that you must continuously monitor opacity and maintain the opacity at or below ten percent (daily block average). Or, if the unit is controlled with a fabric filter, instead of continuously monitoring opacity, we are proposing that the fabric filter may be continuously operated such that the bag leak detection system alarm does not sound more than 5 percent of the operating time during any 6-month period.

For boilers with wet scrubbers that must comply with the PM and mercury emission limits, we are proposing that you must monitor pressure drop and liquid flow rate of the scrubber and maintain the daily block averages at or above the minimum operating limits established during the performance test.

If you elected to demonstrate initial compliance with the mercury emission limit by fuel analysis, we are proposing that you conduct a monthly fuel analysis and maintain the annual average at or below the limit indicated in Table 1 of this preamble.

For boilers that demonstrate compliance with the PM and mercury emission limits by performance (stack) tests, we propose that you must maintain monthly fuel records that demonstrate that you burned no new fuel type or new mixture (monthly average) as set during the performance test. If you plan to burn a new fuel type or new mixture than what was burned during the initial performance test, then we are proposing that you must conduct a new performance test to demonstrate continuous compliance with the PM emission limit and mercury emission limit.

For boilers with heat input capacities equal to or greater than 100 MMBtu/hr, we propose that you must continuously monitor CO and maintain the daily average CO emissions at or below the limits indicated in Table 1 to demonstrate compliance with the CO emission limits at all times.

H. What are the proposed notification, recordkeeping and reporting requirements?

All new and existing sources would be required to comply with some requirements of the General Provisions (40 CFR part 63, subpart A), which are identified in Table 6 of this proposed rule. The General Provisions include specific requirements for notifications, recordkeeping, and reporting. If performance tests are required under this proposed rule, then the notification and reporting requirements for performance tests in the General Provisions would also apply.

Each owner or operator would be required to submit a notification of compliance status report, as required by 40 CFR 63.9(h) of the General Provisions. This proposed rule requires the owner or operator to include in the notification of compliance status report certifications of compliance with rule requirements.

Semiannual compliance reports, as required by 40 CFR 63.10(e)(3) of subpart A, would be required only for semiannual reporting periods when a deviation from any of the requirements in the rule occurred, or any process changes occurred and compliance certifications were reevaluated.

This proposed rule would require records to demonstrate compliance with each emission limit, work practice standard, or management practice. These recordkeeping requirements are specified directly in the General Provisions to 40 CFR part 63.

Records for applicable management practices must be maintained. Specifically, the owner or operator must keep records of the dates and the results of each boiler tune-up.

Records of either continuously monitored parameter data for a control device if a device is used to control the emissions or continuous emission monitoring system (CEMS) data would be required.

Each owner and operator would be required to keep the following records:

(1) All reports and notifications submitted to comply with the rule;

(2) Continuous monitoring data as required in the rule;

(3) Each instance in which you did not meet each emission limit, work/management practice, and operating limit (*i.e.,* deviations from the rule);

(4) Monthly fuel use by each boiler including a description of the type(s) of fuel(s) burned, amount of each fuel type burned, and units of measure;

(5) A copy of the results of all performance tests, energy assessments, opacity observations, performance evaluations, or other compliance demonstrations conducted to demonstrate initial or continuous compliance with the rule; and

(6) A copy of your site-specific monitoring plan developed for the rule, if applicable.

Typically, records would be retained for at least 5 years. In addition, monitoring plans, operating and maintenance plans, and other plans would be updated as necessary and kept for as long as they are still current.

I. Submission of Emissions Test Results to EPA

Compliance test data are necessary for many purposes including compliance determinations, development of emission factors, and determining annual emission rates. EPA has found it burdensome and time consuming to collect emission test data because of varied locations for data storage and varied data storage methods.

One improvement that has occurred in recent years is the availability of stack test reports in electronic format as a replacement for bulky paper copies.

In this action, we are taking a step to improve data accessibility for stack tests (and in the future continuous monitoring data). Boiler area sources would be required to submit to WebFIRE (an EPA electronic database) an electronic copy of stack test reports as well as process data. Data entry requires only access to the Internet and is expected to be completed by the stack testing company as part of the work that it is contracted to perform.

Please note that the proposed requirement to submit source test data electronically to EPA would not require any additional performance testing. In addition, when a facility submits performance test data to WebFIRE, there would be no additional requirements for data compilation; instead, we believe industry would greatly benefit from improved emissions factors, fewer information requests, and better regulation development as discussed below. Because the information that would be reported is already required in the existing test methods and is necessary to evaluate the conformance to the test methods, facilities would already be collecting and compiling these data. One major advantage of submitting source test data through the Electronic Reporting Tool (ERT), which was developed with input from stack testing companies (who already collect and compile performance test data electronically), is that it would provide a standardized method to compile and store all the documentation required by this proposed rule. Another important benefit of submitting these data to EPA at the time the source test is conducted is that these data should reduce the effort involved in data collection activities in the future for these source categories. This results in a reduced burden on both affected facilities (in terms of reduced manpower to respond to data collection requests) and EPA (in terms of preparing and distributing data collection requests). Finally, another benefit of submitting these data to WebFIRE electronically is that these data will greatly improve the overall quality of the existing and new emissions factors by supplementing the pool of emissions test data upon which emissions factors are based and by ensuring that data are more representative of current industry operational procedures. A common complaint we hear from industry and regulators is that emissions factors are out-dated or not representative of a particular source category. Receiving recent performance test results would ensure that emissions factors are updated and more accurate. In summary, receiving these test data already collected for other purposes and using them in the emissions factors development program will save industry, State/local/tribal agencies, and EPA time and money.

As mentioned earlier, the electronic data base that will be used is EPA's WebFIRE, which is a Web site accessible through EPA's TTN (technology transfer network). The WebFIRE Web site was constructed to store emissions test data for use in developing emission factors. A description of the WebFIRE data base can be found at *http://cfpub.epa.gov/oarweb/index.cfm?action=fire.main.* The ERT will be able to transmit the electronic report through EPA's Central Data Exchange (CDX) network for storage in the WebFIRE data base. Although ERT is not the only electronic interface that can be used to submit source test data to the CDX for entry into WebFIRE, it makes submittal of data very straightforward and easy. A description of the ERT can be found at *http://www.epa.gov/ttn/chief/ert/ert_tool.html.*

The ERT can be used to document the conducting of stack tests data for various pollutants including PM, mercury, dioxin/furan, and HCl. Presently, the ERT does not accept opacity data or CEMS data.

EPA specifically requests comment on the utility of this electronic reporting requirement and the burden that owners and operators of boiler area source facilities estimate would be associated with this requirement.

V. Rationale of This Proposed Rule

A. How did EPA determine which pollution sources would be regulated under this proposed rule?

This proposed rule regulates industrial boilers (fired by coal, biomass, or oil) and institutional and commercial boilers (fired by coal, biomass, or oil) that are located at area sources of HAP.

Boilers that are used specifically for research and development are not regulated. However, boilers that only provide steam to a process or for heating at a research and development facility are still subject to this proposed rule.

B. How did EPA determine the subcategories for this proposed rule?

The CAA allows EPA to divide source categories into subcategories when differences between given types of units lead to corresponding differences in the nature of emissions or the technical feasibility of applying emission control techniques. The design, operating, and emissions information that EPA reviewed during the major source rulemaking indicates the need to subcategorize boilers based on the boiler type.

Boiler systems are designed for specific fuel types (*e.g.,* coal, biomass, or oil) and will encounter problems if a fuel with characteristics other than those originally specified is fired. Most boilers can only achieve full load on the fuel or fuels for which they were specifically designed. Changes to the fuel type would often require extensive changes to the fuel handling and feeding system. Additionally, the burners and combustion chamber would need to be redesigned and modified to handle different fuel types and account for increases or decreases in the fuel volume and shape. In some cases, the changes may reduce the capacity and efficiency of the boiler. An additional effect of these changes would be extensive retrofit costs.

Emissions from boilers burning coal, biomass, and oil will also differ. Boilers emit a number of urban HAP. In general, HAP formation is dependent upon the composition of the fuel. The combustion quality and temperature also play an important role. The fuel dependent urban HAP emissions from boilers are metals, including mercury. These fuel dependent HAP emissions generally can be controlled by either changing the fuel property before combustion or by removing the HAP from the flue gas after combustion. Organic HAP, on the other hand, are formed from incomplete combustion and are much less influenced by the characteristics of the fuel being burned. The degree of combustion may be greatly influenced by three general factors: time, turbulence, and temperature. These factors are a function of the design of the boiler which is dependent in part on the type of fuel being burned.

Because these different types of boilers have different emission characteristics which may influence the feasibility and effectiveness of emission control, we are proposing to subcategorize them as follows: boilers designed to fire coal, boilers designed to fire biomass, and boilers designed to fire oil in order to account for these differences in emissions. The coal-fired subcategory includes boilers burning greater than 10 percent coal on an annual fuel heat input basis. The biomass fuel subcategory includes units burning any biomass but not more than 10 percent coal on an annual fuel heat input basis. The oil subcategory includes all remaining boilers.

In summary, we have identified three subcategories of boilers located at area sources: (1) Boilers designed for coal firing, (2) boilers designed for biomass firing, and (3) boilers designed for oil firing.

C. What surrogates are we using?

As explained above, EPA is proposing emission standards for the two source categories in this proposed rule. For mercury from coal-fired area source boilers and POM from all area source boilers, EPA is proposing these standards under CAA sections 112(d)(2) and 112(h). For the other urban HAP which formed the basis of the CAA section 112(c)(3) listing, EPA is proposing standards pursuant to CAA section 112(d)(5).

In selecting the proposed emission standards, we are using PM as a surrogate for the non-mercury metallic urban HAP (arsenic, beryllium, cadmium, chromium, lead, manganese, and nickel). The inherent variability and unpredictability of the non-mercury metal HAP compositions and amounts in fuel have a material effect on the composition and amount of non-mercury metal HAP in the emissions from the boiler. As a result, establishing individual numerical emissions limits for each non-mercury HAP metal species is difficult given the level of uncertainty about the individual non-mercury metal HAP compositions of the fuels that will be combusted. An emission characteristic common to all boilers is that the non-mercury metal HAP are a component of the PM contained in the fly ash emitted from the boiler. A sufficient correlation exists between PM and non-mercury metallic HAP to rely on PM as a surrogate for these HAP and for their control. Therefore, the same control techniques that would be used to control the fly-ash PM will control non-mercury metallic HAP. Emissions limits established to achieve control of PM will also achieve control of non-mercury metal HAP. Consequently, we used PM as a surrogate for the non-mercury metal urban HAP in establishing emissions limits. The use of PM as a surrogate will also eliminate the cost of performance testing to comply with numerous standards for individual non-mercury metals.

We looked at mercury separately from other metallic urban HAP due to its different chemical characteristics and applicable controls.

For the organic urban HAP listed for these source categories (POM, acetaldehyde, acrolein, dioxins, PCB, and formaldehyde), we used CO as a surrogate to represent the organic urban HAP emitted from the boilers. The presence of CO is an indicator of incomplete combustion. A high level of CO in emissions is an indicator of incomplete combustion and, thus, a potential indication of elevated organic HAP emissions. Monitoring equipment for CO is readily available, which is not the case for organic HAP. Also, it is significantly easier and less expensive to measure and monitor CO emissions than to measure and monitor emissions of each individual organic HAP. We considered other surrogates, such as THC, but lacked data on emissions and permit limits for area source boilers. Therefore, using CO as a surrogate for organic urban HAP is a reasonable approach because minimizing CO emissions will result in minimizing organic urban HAP emissions.

D. How did EPA determine the proposed standards for existing units?

Both industrial boilers and institutional/commercial boilers have been on the list of CAA section 112(c)(6) source categories for mercury and POM. That section requires MACT standards for each of the pollutants needed to achieve regulation of 90 percent of the emissions of the relevant pollutant. As previously noted, the CAA allows EPA to establish standards under GACT instead of MACT for urban HAP we propose to regulate to fulfill CAA section 112(c)(3).

As discussed previously, CAA section 112(h) allows the Administrator to promulgate a design, equipment, work practice, or operational standard, or combination thereof, in certain cases where, in the judgment of the Administrator, it is not feasible to prescribe or enforce an emission standard under CAA section 112(d). These cases include the situation in which the application of measurement methodology to a particular class of sources is not practicable due to technical and economic limitations.

As we establish emission standards for each source category listed pursuant to CAA section 112(c)(6), we learn more about the source category. As part of our analysis, we examine the available information about the source category, and we re-examine the inventory associated with the original listing. We continue to believe that we must regulate POM from coal-fired, biomass-fired, and oil-fired area source boilers in order to meet the requirement in section 112(c)(6), and propose below MACT-based limits for POM for all categories. However, based on the information we have learned to date as we are developing standards for various source categories, such as major source boilers, gold mines, commercial and industrial solid waste incinerators, and other categories, we believe that we only need coal-fired area source boilers to meet the 90 percent requirement set forth in section 112(c)(6) for mercury. Therefore,

we propose as our primary option MACT-based controls for mercury only for coal-fired boilers.

With respect to mercury from area source boilers classified as biomass-fired or oil-fired, as well as with respect to other urban HAP besides POM, we have developed proposed standards that reflect GACT for these two area source categories.

1. MACT Analysis for Mercury From Coal-Fired Boilers and POM

All standards established pursuant to CAA section 112(d)(2) must reflect MACT, the maximum degree of reduction in emissions of air pollutants that the Administrator, taking into consideration the cost of achieving such emissions reductions, and any non-air quality health and environmental impacts and energy requirements, determined is achievable for each category or subcategory. For existing sources, MACT cannot be less stringent than the average emission limitation achieved by the best performing 12 percent of existing sources in the category or subcategory for categories or subcategories with 30 or more sources. This requirement constitutes the "MACT floor" for existing area source boilers. EPA may not consider cost in determining the MACT floor. EPA must consider cost, non-air quality health and environmental impacts, and energy requirements in evaluating whether it is appropriate to set a standard more stringent than the MACT floor (beyond-the-floor controls).

a. MACT Floor Analysis for Mercury and POM

The approach selected for determining the MACT floors is based on estimating the emissions levels achieved on average by the best 12 percent of existing sources, for which we have information. In terms of developing MACT emission limits for area source boilers, we have:

—No emission data for POM,
—Limited emission data (nine coal-fired boilers) for mercury,
—No State regulations applicable for mercury or POM,
—No State permits specific for mercury or POM,
—No surrogate for mercury, but CO as a surrogate for POM,
—Emission data on four coal-fired area source boilers using add-on control technology for mercury,
—Limited emission data for CO (5 coal-fired boilers, 30 wood-fired boilers, 68 oil-fired boilers),
—A few State permits with CO limits for coal, oil, and wood-fired area source boilers,

The MACT floor limits for each of the HAP and HAP surrogates (mercury and CO) are calculated based on the performance of the lowest emitting (best performing) sources in each of the subcategories. We ranked all of the sources for which we had data based on their emissions and identified the lowest emitting 12 percent of the sources for each HAP.

We first considered whether fuel switching would be an appropriate control option for sources in each subcategory. We considered the feasibility of fuel switching to other fuels used in the subcategory and to fuels from other subcategories. This consideration included determining whether switching fuels would achieve lower HAP emissions. A second consideration was whether fuel switching could be technically achieved by boilers in the subcategory considering the existing design of boilers. We also considered the availability of various types of fuel.

After considering these factors, we determined that fuel switching was not an appropriate control technology for purposes of determining the MACT floor level of control for any subcategory. This decision was based on the overall effect of fuel switching on HAP emissions, technical and design considerations discussed previously in this preamble, and concerns about fuel availability. This determination is discussed in the memorandum "Development of Fuel Switching Costs and Emission Reductions for Industrial, Commercial, and Institutional Boilers and Process Heaters National Emission Standards for Hazardous Air Pollutants—Area Source" located in the docket.

We used the emissions data for those best performing affected sources to determine the emission limits to be proposed, with an accounting for variability. EPA must exercise its judgment, based on an evaluation of the relevant factors and available data, to determine the level of emissions control that has been achieved by the best performing sources under variable conditions. The Court has recognized that EPA may consider variability in estimating the degree of emission reduction achieved by best-performing sources and in setting MACT floors. See *Mossville Envt'l Action Now* v. *EPA,* 370 F.3d 1232, 1241–42 (DC Cir 2004) (holding EPA may consider emission variability in estimating performance achieved by best-performing sources and may set the floor at level that best-performing source can expect to meet "every day and under all operating conditions").

To calculate the achieved emission limit, including variability, we used the equation:

$$UPL = \bar{x} + t(0.99, n-1) \times \sqrt{s^2 \times \left(\frac{1}{n} + \frac{1}{m}\right)}$$

Where:
n = the number of test runs
m = the number of test runs in the compliance average
s = standard deviation of emission data
t(0.99, n − 1) = the t-statistic
x = emissions data average

Specifically, the MACT floor limit is an upper prediction limit (UPL) calculated with the Student's t-test using the TINV function in Microsoft Excel. The Student's t-test has also been used in other EPA rulemakings in accounting for variability. A prediction interval for a future observation is an interval that will, with a specified degree of confidence, contain the next (or some other pre-specified) randomly selected observation from a population. In other words, the prediction interval estimates what future values will be, based upon present or past background samples taken. Given this definition, the UPL represents the value which we can expect the mean of 3 future observations (3-run average) to fall below, based upon the results of an independent sample from the same population. That is, if we were to randomly select a future test condition from any of these sources (*i.e.,* average of 3 runs), we can be 99 percent confident that the reported level will fall at or below the UPL value. To calculate the UPL, we used the average (or sample mean) and sample standard deviation (SD), which are two statistical measures calculated from the sample data. The average is the central value of a data set, and the SD is the common measure of the dispersion of the data set around the average.

Based on this limited available information, the MACT floor analyses for the three subcategories (coal, biomass, and oil) are discussed below.

1. *Existing area source boilers designed for coal firing:*

Mercury—The total number of coal-fired area source boilers for which we have actual mercury emission data is 9. Thus, the top 12 percent is based on emissions from two boilers. The average mercury emission level of the top 12 percent is 1.3 pounds per trillion Btu (lb/TBtu). The SD of test runs in the top 12 percent boilers is 0.322. Therefore, the 99 percent UPL level is 2.5 lb/TBtu. The resulting MACT floor mercury limit for existing coal-fired area source boilers is 2.5 lb/T Btu (rounded to 0.000003 lb/

million Btu). No fuel analysis data from boilers in the top 12 percent were available for assessing the impact of fuel variability on mercury emissions.

POM—None of the States for which we have an inventory have an applicable emission limit specifically for POM or CO. However, one State (New Jersey) does have standards for CO, but for boilers the size of coal-fired area source boilers, the requirement is actually a work practice standard for CO (*i.e.,* boiler tune-up). For small (less than 50 MMBtu/h) boilers, the New Jersey requirement is to maintain and operate the source in accordance with manufacturer specifications.

The available State permits obtained for coal-fired area source boilers limiting CO emissions were for 12 units located in Ohio (3 units), California (1 unit), and Illinois (8 units). We also obtained CO emission data from 5 coal-fired area source boilers as part of the information collection effort for the major source NESHAP. Therefore, the top 12 percent is made up of three boilers. The average CO level of the top 12 percent is 162 parts per million (ppm) at 3 percent oxygen. The SD of the run data in top 12 percent boilers is 92.1 ppm. Therefore, the 99 percent UPL level is 390 ppm at 3 percent oxygen. The resulting MACT floor CO limit for existing coal-fired area source boilers is 310 ppm at 7 percent oxygen. We correct to 7 percent oxygen because that is typically in the oxygen range that coal-fired boilers operate and we rounded up to the nearest 10 ppm.

2. *Existing area source boilers designed for biomass firing:*

POM—None of the States for which we have an inventory have an applicable emission limit specifically for POM or CO. Actual CO emission data were available from the National Forest Service's Fuels for Schools program for 14 wood-fired boilers. Also, State permits limiting CO emissions from biomass boilers were obtained on another 24 biomass-fired area source boilers. We also obtained CO emission test data from 26 biomass-fired area source boilers as part of the major source ICR survey.

The top 12 percent is made up of 8 boilers. The average CO level of the top 12 percent is 80.6 ppm at 3 percent oxygen. The SD of the top 12 percent boilers is 73.5 ppm. The 99 percent UPL is 192 ppm at 3 percent oxygen, rounded up to 200 ppm. Biomass-fired boilers typically operate at around 7 percent oxygen. Therefore, the MACT floor level is 160 ppm CO at 7 percent oxygen.

3. *Existing area source boilers designed for oil firing:*

POM—None of the States for which we have an inventory have an applicable emission limit specifically for POM or CO. Actual CO emission data were available from 68 oil-fired area source boilers responding to the Boiler MACT ICR. State permits limiting CO emissions from oil-fired area source boilers were obtained on 56 oil-fired area source boilers.

The top 12 percent is made up of 15 boilers. The average CO level of the top 12 percent is 1 ppm at 3 percent oxygen. Based on the test runs from these 15 best performing units, the 99 percent UPL level is 2 ppm at 3 percent oxygen. Therefore, the MACT floor level is 2 ppm CO at 3 percent oxygen. Because oil-fired boilers typically operate at around 3 percent oxygen, additional oxygen content correction was not necessary.

4. Work Practice Standards for Smaller Boilers

As previously discussed, CAA section 112(h)(1) states that the Administrator may prescribe a work practice standard or other requirements, consistent with the provisions of CAA sections 112(d) or (f), in those cases where, in the judgment of the Administrator, it is not feasible to enforce an emission standard. CAA section 112(h)(2)(B) further defines the term "not feasible" to mean when "the application of measurement technology to a particular class of sources is not practicable due to technological and economic limitations."

The standard reference methods for measuring emissions of mercury, CO (as a surrogate for POM), and PM (as a surrogate for urban non-mercury metals) are EPA Methods 29, 10, and 5 of 40 CFR part 60 appendices A–8, A–4, and A–3, respectively. These methods are reliable and relatively inexpensive. However, the methods are not applicable for sampling small diameter (less than 12 inches) stacks. For example, in these small diameter stacks, the conventional Method 5 stack assembly blocks a significant portion of the cross-section of the duct and causes inaccurate measurements. Many existing area source boilers have stacks with diameters less than 12 inches. The stack diameter is generally related to the size of the boiler. Boilers that have a capacity below 10 MMBtu/h generally have stacks with diameters less than 12 inches. Also, many area source boilers do not currently have sampling ports or a platform for accessing the exhaust stack which would require an expensive modification to install sampling ports and a platform.

We conducted a cost-to-sales analysis to evaluate the economic impact of the testing and monitoring costs that area source boiler facilities would incur to demonstrate compliance with the proposed emission limits. The annual compliance costs imposed on each source is for the costs of a stack test for mercury and PM emissions and a continuous emission monitor (CEM) for CO emissions. We assumed that each establishment in each industry, commercial, or institutional sector would be associated with a single boiler. The financial impacts of potential compliance costs are assessed for representative entities in each entity sector using the ratio of compliance costs to the average representative entity revenue (cost-to-sales ratio or CSR).

The results of the analysis indicate that total compliance costs exceed 3 percent (and can reach as high as 19 percent) of the average firm revenues for 79 percent of the facilities. This indicates that the annual costs for testing and monitoring alone would have a significant adverse economic impact on these facilities. The severity of the economic impact would depend on the size of the facility. For small institutional (schools) and commercial (farms) facilities the costs would be prohibitive. This analysis is discussed in the memorandum "Cost-to-Sales Analysis of Testing and Monitoring Costs" located in the docket.

Based on this analysis, pursuant to CAA section 112(h), EPA is proposing that it is not feasible to enforce emission standards for area source boilers having a heat input capacity of less than 10 MMBtu/h because of the technological and economic limitations described above. Thus, a work practice, as discussed below, is being proposed to limit the emissions of mercury and CO (as a surrogate for POM) for existing area source boilers having a heat input capacity of less than 10 MMBTU/h. We are specifically requesting comment on whether a threshold higher than 10 MMBtu/h meets the technical and economic limitations as specified in section 112(h).

For existing area source boilers, the only work practice being used that potentially controls mercury and POM emissions is a boiler tune-up. Mercury is a fuel dependent HAP. That is, the amount of mercury emitted from the boiler depends on the amount of mercury contained in the fuel. Fuel usage can be reduced by improving the combustion efficiency of the boiler. At best, boilers may be 85 percent efficient and untuned boilers may have combustion efficiencies of 60 percent or lower. As combustion efficiency

decreases, fuel usage increases to maintain energy output resulting in increased emissions.

On the other hand, POM is formed from incomplete combustion of the fuel. The objective of good combustion is to release all the energy in the fuel while minimizing losses from combustion imperfections and excess air. The combination of the fuel with the oxygen requires temperature (high enough to ignite the fuel constituents), mixing or turbulence (to provide intimate oxygen-fuel contact), and sufficient time (to complete the process), sometimes referred to as the three Ts of combustion. Good combustion practice (GCP), in terms of boilers, could be defined as the system design and work practices expected to minimize organic HAP emissions.

We have obtained information on area source boilers reported using GCP, as part of the information collection effort for the major source NESHAP. The data that we have suggests that area source boilers typically conduct boiler tune-ups. We also reviewed State regulations and permits applicable to area source boilers. The work practices listed in State regulations includes tune-ups (10 States), operator training (1 State), periodic inspections (2 States), and operation in accordance with manufacturer specifications (1 State). Of the 44 area source boilers with a capacity of less than 10 MMBtu/h that responded to EPA's information collection effort for major source NESHAP, 28 (or 64 percent) reported conducting a boiler tune-up program. Ultimately, we determined that at least 6 percent of the boilers in each of the subcategories are subject to a tune-up requirement. Therefore, the work practice of a tune-up does establish the MACT floor for mercury and POM emissions from existing area source boilers with a heat input capacity of less than 10 MMBtu/h.

A detailed discussion of the MACT floor methodology is presented in the memorandum "MACT Floor Analysis for the Industrial, Commercial, and Institutional Area Source Boilers" in the docket.

b. Beyond-the-Floor Determination for Mercury and POM.

We considered the pollution prevention and energy conservation measure of an energy assessment as a beyond-the-floor option for mercury and POM emissions. An energy assessment provides valuable information on improving energy efficiency. An energy assessment, or energy audit, is an in-depth energy study identifying all energy conservation measures appropriate for a facility given its operating parameters. An energy assessment refers to a process which involves a thorough examination of potential savings from energy efficiency improvements, pollution prevention, and productivity improvement. It leads to the reduction of emissions of pollutants through process changes and other efficiency modifications. Besides reducing operating and maintenance costs, improving energy efficiency reduces negative impacts on the environment. Improvement in energy efficiency results in decreased fuel use which results in a corresponding decrease in emissions (both HAP and non-HAP) from the boiler, but not necessarily all those present. The Department of Energy (DOE) has conducted energy assessments at selected manufacturing facilities and reports that facilities can reduce fuel/energy use by 10 to 15 percent by using best practices to increase their energy efficiency. Many best practices are considered pollution prevention because they reduce the amount of fuel combusted which results in a corresponding reduction in emissions from the fuel combustion. The most common best practice is simply tuning the boiler to the manufacturer's specification.

The one-time cost of an energy assessment ranges from $2500 to $55,000 depending on the size of the facility. If a facility elected to implement the cost-effective energy conservation measures identified in the energy assessment, it would potentially result in greater mercury and POM reduction than achieved by a boiler tune-up alone. In addition, the cost of an energy assessment is minimal, in most cases, compared to the cost for testing and monitoring to demonstrate compliance with an emission limit. Furthermore, the costs of any energy conservation improvement will be offset by the cost savings in lower fuel costs. Therefore, we decided to go beyond the MACT floor for this proposed rule for the existing area source boilers. The proposed standards for existing area source facilities with a boiler that has a capacity equal to or greater than 10 MMBtu/h for mercury and POM include the requirement of a performance of an energy assessment to identify energy conservation measures. Since there was insufficient information to determine if requiring implementation of cost-effective measures were economically feasible, we are seeking comment on this point.

In this proposed rule, we are defining a cost-effective energy conservation measure to be any measure that has a payback (return of investment) period of two years or less. This payback period was selected based on section 325(o)(2)(B)(iii) of the Energy Policy and Conservation Act which states that there is a presumption that an energy conservation standard is economically justified if the increased installed cost for a measure is less than three times the value of the first-year energy savings resulting from the measure.

We believe that an energy assessment is an appropriate beyond-the-floor control technology because it is one of the measures identified in CAA section 112(d)(2). CAA section 112(d)(2) states that "Emission standards promulgated * * * and applicable to new or existing sources * * * is achievable * * * through application of measures, processes, methods, systems or techniques including, but not limited to measures which—

(A) reduce the volume of, or eliminate emissions of, such pollutants through process changes, substitution of materials or other modifications,

The purpose of an energy assessment is to identify energy conservation measures (such as process changes or other modifications to the facility) that can be implemented to reduce the facility energy demand which would result in reduced fuel use. Reduced fuel use will result in a corresponding reduction in HAP, and non-HAP, emissions. Thus, an energy assessment, in combination with the MACT emission limits will result in the maximum degree of reduction in emissions as required by 112(d)(2). Therefore, we are proposing to require all existing sources to conduct a one-time energy assessment to identify cost-effective energy conservation measures on the boiler's energy consuming systems.

We are proposing that the energy assessment be conducted by energy professionals and/or engineers that have expertise that cover all energy using systems, processes, and equipment. We are aware of at least two organizations that provide certification of specialists in evaluating energy systems. We are proposing that a qualified specialist is someone who has successfully completed the Department of Energy's Qualified Specialist Program for all systems or a professional engineer certified as a Certified Energy Manager by the Association of Energy Engineers.

We are specifically requesting comment on: (1) Whether our estimates of the assessment costs are correct; (2) is there adequate access to certified assessors; (3) are there other organizations for certifying energy engineers; (4) are online tools adequate

to inform the facility's decision to make efficiency upgrades; (5) is the definition of "cost-effective" appropriate in this context since it refers to payback of energy saving investments without regard to the impact on HAP reduction; and (6) what rate of return should be used.

A detailed description of the beyond-the-floor consideration is in the memorandum "Methodology for Estimating Cost and Emissions Impacts for Industrial, Commercial, Institutional Area Source Boilers" in the docket.

2. GACT Determination for Existing Area Source Boilers

As provided in CAA section 112(d)(5), we are proposing standards representing GACT for these area source boilers.

For existing coal and biomass-fired area source boilers, the add-on control technology generally being used is multiclones. We found that this technology is minimally effective in controlling urban metal HAP and has no effect on urban organic HAP.

Multiclones are mechanical separators that use velocity differential across the cyclones to separate particles. A multiclone uses several smaller diameter cyclones to improve efficiency. Multiclones have a control efficiency for PM emissions of about 75 percent. Multiclones are more efficient in collecting larger particles and their collection efficiency falls off at small particle sizes. This is a disadvantage because non-mercury metallic HAP tend to be on small size particles (*i.e.,* fine particle enrichment). Based on emission data obtained during the major source NESHAP development, multiclones have a control efficiency for non-mercury metallic HAP of only about 10 percent and have no effect on reducing mercury emissions. The cost of using multiclones (capital, testing, and monitoring) is estimated to be between $50,000 and $100,000 depending on the size of the boiler.

We also considered various pollution prevention and energy conservation options as the potential basis for GACT for the urban metal HAP and the organic urban HAP. The most common options, and generally available, are simply tuning the boiler to the manufacturer's specification. A boiler tune-up provides potential savings from energy efficiency improvements and pollution prevention. Besides reducing operating and maintenance costs, improving energy efficiency reduces negative impacts on the environment. Improvement in energy efficiency results in decreased fuel use which results in a corresponding decrease in emissions (both HAP and non-HAP) from the boiler. A boiler tune-up requirement would potentially result in the same non-mercury metallic HAP reduction as a PM emission limit based on performance of multiclones but would also reduce emissions of organic HAP. In addition, the cost of a boiler tune-up appears minimal compared to the cost for testing and monitoring to demonstrate compliance with an emission limit.

For existing oil-fired area source boilers, we found no add-on control technology being used.

Therefore, we determined that GACT for existing area source boilers with heat input capacities of 10 MMBtu/hour or greater is a management practice requiring the implementation of a boiler tune-up program. Thus, for existing area source boilers, we are proposing GACT for HAP other than mercury and POM to be a management practice requiring the implementation of a boiler tune-up program.

If we conclude that our obligations under section 112(c)(6) for mercury can be met without mercury emissions from biomass-fired or oil-fired area source boilers, we believe that several requirements of this proposed rule would be generally available to the regulated community and would provide some control of mercury and other fuel-bound pollutants at existing sources with larger boilers. For example, the requirements to optimize combustion, conduct an energy assessment, and conduct biennial tune-ups would decrease emissions of mercury because less fuel would be burned. In contrast, we do not believe that fabric filters are widely used now, would be expensive to install for small businesses, and therefore would not be considered GACT. Therefore, we seek comment on whether the various measures discussed in this preamble to reduce fuel consumption in connection with POM control and control of urban metal HAP and organic urban HAP would represent GACT for mercury emitted from biomass-fired and oil-fired area source boilers.

E. How did EPA determine the proposed standards for new units?

As noted above, we have developed the proposed standards to reflect the application of MACT for mercury and POM, and GACT for arsenic, beryllium, cadmium, lead, chromium, manganese, nickel, ethylene dioxide, and polychlorinated biphenyls (PCB).[1]

[1] The proposed emission standards will also reduce emissions of other urban HAP, which did not form the basis of the listing. Those urban HAP include benzene, acetaldehyde, acrolein, dioxins, and formaldehyde.

1. MACT Analysis for Mercury From Coal-fired Boilers and POM

The CAA specifies that MACT for new boilers shall not be less stringent than the emission control that is achieved in practice by the best-controlled similar source, as determined by the Administrator. This minimum level of stringency is the MACT floor for new units. EPA may not consider costs or other impacts in determining the MACT floor. However, EPA must consider cost, non-air quality health and environmental impacts, and energy requirements in evaluating whether it is appropriate to set a standard that is more stringent than the MACT floor (beyond-the-floor controls).

a. MACT Floor Analysis for Mercury and POM. Similar to the MACT floor process used for existing area source boilers, the approach used for determining the MACT floors for new units is based on estimating the emissions levels achieved by the best-controlled similar source, for which we have information.

1. *New area source boilers designed for coal firing:*

Mercury—We determined in the context of the major source rulemaking for boilers that fabric filters are the most effective technology employed by coal-fired industrial, commercial, and institutional boilers for controlling mercury emissions. Five coal-fired area source boilers have been identified as having a fabric filter. Based on available emission data, the best performing unit (*i.e.,* the unit having the reported lowest mercury level based on a three run test) is an area source coal-fired boiler equipped with an electrostatic precipitator (ESP). The boiler had a test average for mercury of 1.4 lb/TBtu with a SD of 0.307 to account for variability. Therefore, the resulting MACT floor mercury limit for new coal-fired area source boilers is determined to be 3.2 lb/T Btu. Since this calculated value is less stringent than the MACT floor for mercury at existing boilers designed for coal firing, the MACT floor for new sources was established to be equal to the floor for existing sources (0.000003 lb/million Btu).

POM—For POM emissions, the only control technology identified as being used on area source boilers is monitoring and maintaining CO emission levels which is associated with minimizing emissions of organic HAP (including POM). Carbon monoxide is generally an indicator of incomplete combustion because CO will oxidize to carbon dioxide if adequate oxygen is available. Therefore, controlling CO emissions can be a mechanism for

ensuring combustion efficiency and may be viewed as a GCP. As discussed previously in this preamble, CO is considered a surrogate for organic HAP (including POM) emissions in this proposed rule.

None of the States for which we have an inventory have an applicable emission limit specifically for POM or CO. However, one State (New Jersey) does have standards for CO, but for boilers the size of coal-fired area source boilers, it is actually a work practice standard for CO (*i.e.,* tune-up). For small (less than 50 MMBtu/h) boilers, New Jersey's requirement is to maintain and operate the source in accordance with manufacturers' specifications.

Considering available State permit data and emission test data for coal-fired area source boilers the best controlled similar source is a coal-fired area source boiler having an average three run CO test emission level of 216 ppm at 3 percent oxygen. The calculated 99 percent UPL, to account for variability, is 640 ppm at 3 percent oxygen. Since this calculated value is less stringent than the MACT floor for CO at existing boilers designed for coal firing, the MACT floor for new sources was established to be equal to the floor for existing sources (310 ppm at 7 percent oxygen).

2. *New area source boilers designed for biomass firing:*

POM—None of the States for which we have an inventory have an applicable emission limit specifically for POM or CO. Actual CO emission data were available from the Fuels for Schools program for 14 biomass-fired boilers and from 29 biomass-fired area source boilers as part of the major source ICR survey. Also, State permits limiting CO emissions from biomass boilers were obtained on another 27 biomass-fired area source boilers. Therefore, the MACT floor for POM achieved by the best controlled similar source is based on actual CO emission data.

The average 3-run test CO level of the best controlled similar source is 38.6 ppm at 3 percent oxygen. The SD for the test runs is 14 ppm. Therefore, the 99 percent UPL is 120 ppm at 3 percent oxygen, rounded up to the nearest 10 ppm. Thus, the proposed MACT floor level is 100 ppm CO at 7 percent oxygen.

3. *New area source boilers designed for oil firing:*

POM—None of the States for which we have an inventory have an applicable emission limit specifically for POM or CO. Actual CO emission data were available on 66 oil-fired area source boilers. State permits limiting CO emissions from oil-fired area source boilers were obtained on 46 oil-fired area source boilers. Therefore, the proposed MACT floor for POM achieved by the best controlled similar source would be based on the boilers reporting the lowest CO emission level.

The CO emission level of the best performing similar source is 0.6 ppm at 3 percent oxygen. The SD of the test runs is 0.04 ppm. Therefore, the 99 percent UPL and the proposed MACT floor level is 1 ppm CO at 3 percent oxygen, rounded up to the nearest whole ppm.

A detailed description of the MACT floor determination is in the memorandum, "MACT Floor Analysis for Industrial, Commercial, and Institutional Area Source Boilers" in the docket.

4. *Appropriateness of Work Practice Standards for New Area Source Boilers:*

As previously discussed, CAA section 112(h) states that the Administrator may prescribe a work practice standard or other requirements, consistent with the provisions of CAA sections 112(d) or (f), in those cases where, in the judgment of the Administrator, it is not feasible to enforce an emission standard due to technical and economic limitations.

As was the case for existing small area source boilers, total compliance costs would likely exceed 3 percent of the average firm revenues for some new facilities. This indicates that the annual costs for testing and monitoring alone may have a significant adverse economic impact on some new facilities.

As discussed previously, the standard reference methods for measuring emissions of mercury, CO (as a surrogate for POM), and PM (as a surrogate for urban non-mercury metals) are EPA Methods 29, 10, and 5 and are not applicable for sampling small diameter stacks. We solicit comment on whether it would be technically infeasible to design sampling ports adequate for the test methods in boilers that are below a certain size.

Based on this analysis and the reason discussed below, we are not proposing a work practice under CAA section 112(h) for new area source boilers. New facilities, as opposed to existing facilities, have the added flexibility of including compliance costs into their design and planning. This would include the design and cost to provide a performance testing facility that has sampling ports adequate for the test methods and constructing the exhaust stack such that HAP emission rates can be accurately determined. In addition, a new facility has the option of fuel selection in minimizing their compliance costs.

A detailed discussion of the MACT floor methodology is presented in the memorandum "MACT Floor Analysis for the Industrial, Commercial, and Institutional Area Source Boilers" in the docket.

b. Beyond-the-floor Analysis for Mercury and POM for New Area Source Boilers. The MACT floor level of control for new units is based on the emission control that is achieved in practice by the best controlled similar source within each of the subcategories. No technologies or other HAP emission reduction approaches were identified that would achieve mercury or POM reduction greater than the new source floors for each of the subcategories.

Therefore, we decided to not go beyond the MACT floor level of control for mercury and POM emissions for new area source boilers in this proposed rule. A detailed description of the beyond-the-floor consideration is in the memorandum "Methodology for Estimating Cost and Emissions Impacts for Industrial, Commercial, Institutional Area Source Boilers" in the docket.

2. GACT Determination for New Area Source Boilers

The control technologies currently used by facilities in the source categories that reduce non-mercury metallic HAP and PM are fabric filters and ESP. We determined that these controls are generally available and cost effective for new area source boilers. New area source boilers with heat input capacity of 10 MMBtu/h or greater are subject to the NSPS for boilers (either subpart Db or Dc of 40 CFR part 60) which regulate emissions of PM and require performance testing. Furthermore, new coal-fired area source boilers will likely require a PM control device to comply with the proposed mercury MACT standard.

The emissions database contains PM test data for 82 area source boilers obtained from the ICR survey conducted for major sources. All of the boilers were greater than 10 million Btu per hour in size. In order to develop PM (as a surrogate for non-mercury metallic HAP) emission limits for the three subcategories, we compared the PM limits in NSPS subpart Dc with the obtained PM emission data. We considered this to be an appropriate methodology because many new area source boilers will be subject to NSPS subpart Dc. Consequently, we determined that the PM limits in the NSPS could be used to establish the PM GACT emission limit for area source boilers.

The proposed GACT PM emission level based on NSPS subpart Dc for new area source boilers is 0.03 lb/million Btu. Of the 82 area source boilers for which we have PM emission data, 11 had reported PM emission levels below 0.03 lb/million Btu.

For the organic urban HAP (acetaldehyde, acrolein, dioxins, and formaldehyde), the most effective control technology identified is minimizing CO emissions and we determined that this control is generally available and cost effective for new area source boilers. This determination is based on the fact there is no additional costs associated with proposing a CO emission limit (as a surrogate for the urban organic HAP) as GACT because it is the same as the MACT standard being proposed for these subcategories for POM.

F. How did we select the compliance requirements?

We are proposing testing, monitoring, notification, and recordkeeping requirements that are adequate to assure continuous compliance with the requirement of the rule. Those requirements are described in detail in sections IV.F to IV.H. We selected these requirements based upon our determination of the information necessary to ensure that the emission standards, work practices, and management practices are being followed and that emission control devices and equipment are maintained and operated properly. The proposed requirements ensure compliance with this proposed rule without proposing a significant additional burden for facilities that must implement them.

We are proposing that compliance with the PM and mercury emission limits be demonstrated by an initial performance test. To ensure continuous compliance with the proposed PM and mercury emission limits, this proposed rule would require continuous parameter monitoring of control devices and recordkeeping. Additionally, this proposed rule requires annual performance tests to ensure, on an ongoing basis, that the air pollution control device is operating properly and its performance has not deteriorated. If initial compliance with the mercury emission limit is demonstrated by a fuel analysis performance test, this proposed rule requires fuel analyses monthly, with compliance determined based on an annual average.

We evaluated the cost of applying PM CEMS to area source boilers. For PM CEM monitoring, capital costs were estimated to be $88,000 per unit and annualized costs were estimated to be $33,000 per unit. The estimated national annual cost would be $4.5 billion. We determined the costs would make them an unreasonable monitoring option.

We reviewed the cost information for CO CEMS provided by commenters on the NESHAP for major source boilers to make the determination on whether to require CO CEMS or conducting annual CO testing to demonstrate continuous compliance with the CO emission limit. In evaluating the available cost information, we determined that requiring CO CEMS for units with heat input capacities greater or equal to 100 MMBtu/hr is reasonable. This proposed rule requires units with heat input capacities less than 100 MMBtu/hr to conduct initial and annual performance (stack) tests.

G. Alternative MACT Standards for Consideration

Our analysis of the inventory for mercury under CAA section 112(c)(6) has led us to believe that we do not need to regulate biomass-fired and oil-fired boilers under MACT in order to meet our statutory obligations under this provision. We solicit comment on whether we should require the MACT-based emission limits on mercury emissions from larger boilers in this category if we conclude that such controls are unnecessary to meet our obligations under section 112(c)(6).

We also solicit comment on MACT-based requirements for mercury emitted from biomass-fired and oil-fired area source boilers in the event comment and further analysis of the inventory demonstrates such regulation is necessary to fulfill the 90 percent requirement under CAA section 112(c)(6) or is otherwise appropriate. We present what would be MACT below.

1. *Existing area source boilers designed for biomass firing:*

Mercury—We obtained mercury emission data from two biomass-fired area source boilers as part of the information collection effort for the major source NESHAP. Thus, the top 12 percent would be comprised of one boiler. The average mercury level of the top 12 percent is 0.36 lb/TBtu. All 3 test runs results were nondetect. The standard deviation for the three detection limits, when converted to lb/mmBtu using the heat input rates during each run, was 1.82E–09. Therefore, the resulting MACT floor mercury limit for existing biomass-fired area source boilers would be 0.37 lb/TBtu (rounded to 0.0000004 lb/MMBtu).

2. *Existing area source boilers designed for oil firing:*

Mercury—There are no available emission data, State regulations, or State permits regarding mercury emissions from oil-fired area source boilers. Available emission factors are generally the average of available data and would not reasonably represent the average of the top 12 percent best performing units. However, we have obtained mercury emission data on major source oil-fired boilers as part of the major source rulemaking. Since major source oil-fired boilers are similar in design and controls as compared to area source oil-fired boilers, we are applying the major source MACT limit of 4 lb/TBtu (0.000004 lb/MMBtu) to existing oil-fired area source boilers.

3. *New area source boilers designed for biomass firing:*

Mercury—We determined in the context of the major source rulemaking for boilers that fabric filters are the most effective technology employed by biomass-fired boilers for controlling mercury emissions. However, there is no test information on biomass-fired boilers equipped with fabric filters in which to determine control efficiency.

The average mercury level of the "best controlled" unit for which we have emission data is 0.36 lb/TBtu. All 3 test runs results were nondetect. The standard deviation for the three detection limits, when converted to lb/MMBtu using the heat input rates during each run, was 1.82E–09. Therefore, the resulting MACT floor mercury limit for existing biomass-fired area source boilers would be 0.36 lb/TBtu (0.0000004 lb/MMBtu).

4. *New area source boilers designed for oil firing:*

Mercury—There are no available emission data, State regulations, or State permits regarding mercury emissions from oil-fired area source boilers. Available emission factors are generally the average of available data and would not reasonably represent the best performing unit. However, we have obtained mercury emission data on major source oil-fired boilers as part of the major source rulemaking. Since major source oil-fired boilers are similar in design and controls as compared to area source oil-fired boilers, we are applying the major source MACT limit for new oil-fired boilers of 0.3 lb/TBtu (0.0000003 lb/MMBtu) to new oil-fired area source boilers.

H. How did we decide to exempt these area source categories from title V permitting requirements?

For the reasons described below, we are proposing to exempt from title V permitting requirements affected sources in the industrial boiler and the

institutional/commercial boiler area source categories that are not certain synthetic area sources. We estimate that at least 48 synthetic area sources reduced their HAP emissions to below the major source thresholds by installing air pollution control devices. We are not proposing to exempt from title V those synthetic area sources that have reduced their HAP emissions to below the major source thresholds by installing air pollution control devices.

CAA section 502(a) provides that the Administrator may exempt an area source category (in whole or in part) from title V if the Administrator determines that compliance with title V requirements is "impracticable, infeasible, or unnecessarily burdensome" on an area source category. *See* CAA section 502(a). In December 2005, in a national rulemaking, EPA interpreted the term "unnecessarily burdensome" in CAA section 502 and developed a four-factor balancing test for determining whether title V is unnecessarily burdensome for a particular area source category, such that an exemption from title V is appropriate. See 70 FR 75320, December 19, 2005 (Exemption Rule).

The four factors that EPA identified in the Exemption Rule for determining whether title V is "unnecessarily burdensome" on a particular area source category include: (1) Whether title V would result in significant improvements to the compliance requirements, including monitoring, recordkeeping, and reporting, that are proposed for an area source category (70 FR 75323); (2) whether title V permitting would impose significant burdens on the area source category and whether the burdens would be aggravated by any difficulty the sources may have in obtaining assistance from permitting agencies (70 FR 75324); (3) whether the costs of title V permitting for the area source category would be justified, taking into consideration any potential gains in compliance likely to occur for such sources (70 FR 75325); and (4) whether there are implementation and enforcement programs in place that are sufficient to assure compliance with the NESHAP for the area source category, without relying on title V permits (70 FR 75326).

In discussing these factors in the Exemption Rule, we further explained that we considered on "a case-by-case basis the extent to which one or more of the four factors supported title V exemptions for a given source category, and then we assessed whether considered together those factors demonstrated that compliance with title V requirements would be 'unnecessarily burdensome' on the category, consistent with section 502(a) of the Act." See 70 FR 75323. Thus, in the Exemption Rule, we explained that not all of the four factors must weigh in favor of exemption for EPA to determine that title V is unnecessarily burdensome for a particular area source category. Instead, the factors are to be considered in combination, and EPA determines whether the factors, taken together, support an exemption from title V for a particular source category.

In the Exemption Rule, in addition to determining whether compliance with title V requirements would be unnecessarily burdensome on an area source category, we considered, consistent with the guidance provided by the legislative history of CAA section 502(a), whether exempting the area source category would adversely affect public health, welfare, or the environment. See 70 FR 15254–15255, March 25, 2005. As explained below, we propose that title V permitting is unnecessarily burdensome for a majority of the area sources at issue in this proposed rule. We have also determined that the proposed exemptions from title V would not adversely affect public health, welfare, and the environment. Our rationale for this decision follows here.

In considering the exemption from title V requirements for sources in the categories affected by this proposed rule, we first compared the title V monitoring, recordkeeping, and reporting requirements (factor one) to the requirements in the proposed NESHAP for the boiler area source categories. This proposed rule requires facilities to comply with either emission limits using add-on controls or process changes or implementation of certain work or management practices. This proposed rule would require direct monitoring of emissions or control device parameters, both continuous and periodic, recordkeeping that also may serve as monitoring, and deviation and other semi-annual reporting to assure compliance with this NESHAP.

The monitoring component of the first factor favors title V exemption. For the work and management practices, this proposed standard provides monitoring in the form of recordkeeping that would assure compliance with the requirements of this proposed rule. Monitoring by means other than recordkeeping for the work and management practices is not practical or appropriate. Records are required to ensure that the work and management practices are followed. This proposed rule requires continuous parameter monitoring, with periodic recording of the parameter for the required control device, to assure compliance. The records are required to be maintained in a form suitable and readily available for expeditious review, and that they are kept for at least five years, the first two of which must be onsite.

As part of the first factor, in addition to monitoring, we have considered the extent to which title V could potentially enhance compliance for area sources covered by this proposed rule through recordkeeping or reporting requirements. We have considered the various title V recordkeeping and reporting requirements, including requirements for a 6-month monitoring report, deviation reports, and an annual certification in 40 CFR 70.6 and 71.6.

For any boiler area source, this proposed NESHAP requires an Initial Notification and a Notification of Compliance Status. This proposed rule also requires facilities to certify compliance with the emission limits, work practices, and management practices. In addition, facilities must maintain records showing compliance through the required parameter monitoring and deviation requirements. The information required in the deviation reports is similar to the information that must be provided in the deviation reports required under 40 CFR 70.6(a)(3) and 40 CFR 71.6(a)(3).

We acknowledge that title V might require additional compliance requirements on these categories, but we have determined that the monitoring, recordkeeping and reporting requirements of the proposed NESHAP are sufficient to assure compliance with the provisions of the NESHAP. Given the nature of the operations at most area sources and the types of requirements in this rule, title V would not significantly improve those compliance requirements.

For the second factor, we determine whether title V permitting would impose a significant burden on the area sources in the categories and whether that burden would be aggravated by any difficulty the source may have in obtaining assistance from the permitting agency. Subjecting any source to title V permitting imposes certain burdens and costs that do not exist outside of the title V program. EPA estimated that the average cost of obtaining and complying with a title V permit was $65,700 per source for a 5-year permit period, including fees. See Information Collection Request for Part 70 Operating Permit Regulations, January 2007, EPA ICR Number 1587.07. EPA does not have specific estimates for the burdens and costs of permitting industrial, commercial, and institutional boiler

area sources; however, there are certain activities associated with the part 70 and 71 rules. These activities are mandatory and impose burdens on the any facility subject to title V. They include reading and understanding permit program guidance and regulations; obtaining and understanding permit application forms; answering follow-up questions from permitting authorities after the application is submitted; reviewing and understanding the permit; collecting records; preparing and submitting monitoring reports on a 6-month or more frequent basis; preparing and submitting prompt deviation reports, as defined by the State, which may include a combination of written, verbal, and other communications methods; collecting information, preparing, and submitting the annual compliance certification; preparing applications for permit revisions every 5 years; and, as needed, preparing and submitting applications for permit revisions. In addition, although not required by the permit rules, many sources obtain the contractual services of consultants to help them understand and meet the permitting program's requirements. The ICR for part 70 provides additional information on the overall burdens and costs, as well as the relative burdens of each activity described here. Also, for a more comprehensive list of requirements imposed on part 70 sources (hence, burden on sources), see the requirements of 40 CFR 70.3, 70.5, 70.6, and 70.7.

In assessing the second factor for facilities affected by this proposal, we found that most of the facilities that would be affected by this proposed rule are small entities. These small sources lack the technical resources that would be needed to comply with permitting requirements and the financial resources that would be needed to hire the necessary staff or outside consultants. As discussed above, title V permitting would impose significant costs on these area sources, and, accordingly, we conclude that title V is a significant burden for the sources in these categories that we propose to exempt. Furthermore, given the estimated 91,300 area source facilities (including schools, hospitals, and churches) in the categories, it would likely be difficult for them to obtain sufficient assistance from the permitting authority. Thus, we conclude that factor two supports title V exemption for the sources in these categories that we propose to exempt.

The third factor, which is closely related to the second factor, is whether the costs of title V permitting for these area sources would be justified, taking into consideration any potential gains in compliance likely to occur for such sources. We explained above under the second factor that the costs of compliance with title V would impose a significant burden on many of the approximately 137,000 facilities affected by this proposed rule. We also concluded in considering the first factor that, while title V might impose additional requirements, the monitoring, recordkeeping and reporting requirements in this proposed NESHAP assure compliance with the emission standards, work practices, and management practices imposed in the NESHAP. In addition, below in our consideration of the fourth factor, we find that there are adequate implementation and enforcement programs in place to assure compliance with the NESHAP. Because the costs, both economic and non-economic, of compliance with title V are high, and the potential for gains in compliance is low, title V permitting is not justified for the sources we propose to exempt. Accordingly, the third factor supports title V exemptions for these area source categories, except as discussed below.

The fourth factor we considered in determining if title V is unnecessarily burdensome is whether there are implementation and enforcement programs in place that are sufficient to assure compliance with the NESHAP without relying on title V permits. EPA has implemented regulations that provide States the opportunity to take delegation of area source NESHAP, and we believe that State delegated programs are sufficient to assure compliance with this NESHAP. See 40 CFR part 63, subpart E (States must have adequate programs to enforce the CAA section 112 regulations and provide assurances that they will enforce the NESHP before EPA will delegate the program).

We also note that EPA retains authority to enforce this NESHAP anytime under CAA sections 112, 113, and 114. Also, States and EPA often conduct voluntary compliance assistance, outreach, and education programs (compliance assistance programs), which are not required by statute. We determined that these additional programs will supplement and enhance the success of compliance with these proposed standards. We believe that the statutory requirements for implementation and enforcement of this NESHAP by the delegated States and EPA and the additional assistance programs described above together are sufficient to assure compliance with these proposed standards without relying on title V permitting.

In light of all the information presented here, we believe that there are implementation and enforcement programs in place that are sufficient to assure compliance with the proposed standards without relying on title V permitting for the sources we are proposing to exempt.

Balancing the four factors for these area source categories strongly supports the proposed finding that title V is unnecessarily burdensome for the sources we propose to exempt. While title V might add additional compliance requirements if imposed, we believe that there would not be significant improvements to the compliance requirements in this proposed rule because the proposed rule requirements are specifically designed to assure compliance with the emission standards imposed on the area sources we propose to exempt. We further maintain that the economic and non-economic costs of compliance with title V would impose a significant burden on the sources we propose to exempt. We determined that the high relative costs would not be justified given that there is likely to be little or no potential gain in compliance if title V were required. And, finally, there are adequate implementation and enforcement programs in place to assure compliance with these proposed standards. Thus, we propose that title V permitting is "unnecessarily burdensome" for these area source categories, except as discussed below.

In addition to evaluating whether compliance with title V requirements is "unnecessarily burdensome", EPA also considered, consistent with guidance provided by the legislative history of CAA section 502(a), whether exempting these area source categories from title V requirements would adversely affect public health, welfare, or the environment. Exemption of these area source categories from title V requirements would not adversely affect public health, welfare, or the environment because the level of control would remain the same if a permit were required. The title V permit program does not impose new substantive air quality control requirements on sources, but instead requires that certain procedural measures be followed, particularly with respect to determining compliance with applicable requirements. As stated in our consideration of factor one for this category, title V would not lead to significant improvements in the compliance requirements applicable to existing or new area sources that we propose to exempt.

Furthermore, we explained in the Exemption Rule that requiring permits for the large number of area sources could, at least in the first few years of implementation, potentially adversely affect public health, welfare, or the environment by shifting State agencies resources away from assuring compliance for major sources with existing permits to issuing new permits for these area sources, potentially reducing overall air program effectiveness. Based on the above analysis, we conclude that title V exemptions for these area sources would not adversely affect public health, welfare, or the environment for all of the reasons explained above.

For the reasons stated here, we are proposing to exempt these area source categories, except for certain synthetic area sources, as explained below, from title V permitting requirements.

We have determined that it is not appropriate to exempt from Title V requirements those synthetic area sources that installed air pollution controls. Unlike many other area source categories that we have exempted from title V while implementing the requirements of CAA sections 112(c)(3) and 112(k)(3)(B), the boiler area source categories include a number of synthetic area sources that installed air pollution controls to become area sources. Synthetic area sources that installed controls represent less than one percent of the total number of sources that will be subject to the final rule. In fact, these sources are much more like the major sources of HAP that will be subject to the Boiler MACT. In addition, many of these sources are located in cities, and often in close proximity to residential and commercial centers where large numbers of people live and work. The record also indicates that many of these synthetic area sources have significantly higher emissions potential when uncontrolled than the other sources in the boiler area source categories, even those that are synthetic minor sources that took operational limits to attain area source status.

For these reasons, we believe that the additional public participation and compliance benefits of additional informational, monitoring, reporting, certification, and enforcement requirements that exist in title V should be the same for a major source that installed a control device after 1990 to become an area source as for a source that is major and installed a control device to comply with an applicable major source NESHAP, and thereby reduced emissions below major source levels (10 tpy of a single HAP and 25 tpy of total HAP). Many of the synthetic area sources that became area sources by virtue of installing add-on controls are large facilities with comprehensive compliance programs in place because their uncontrolled emissions would far exceed the major source threshold. We maintain that requiring additional public involvement and compliance assurance requirements through title V is important to ensure that these sources are maintaining their emissions at the area source level.

For these reasons above, this proposed rule requires title V permits for major sources of HAP emissions that installed controls after 1990 to become area sources of HAP emissions. We estimate that approximately 170 sources that will be subject to this rule are either required to have title V permits because of criteria pollutants or the proposed rule will require the affected area sources to obtain title V permits.

We are not requiring title V permits for sources that reduced their emissions to area source levels by taking operational restrictions, such as restricting hours of operation or production, or for natural area sources, for the reasons set forth above.

VI. Summary of the Impacts of This Proposed Rule

A. What are the air impacts?

Table 2 of this preamble illustrates, for each subcategory, the estimated emissions reductions achieved by this proposed rule (*i.e.,* the difference in emissions between an area source boiler controlled to the MACT/GACT level of control and boilers at the current baseline) for new and existing sources. Nationwide emissions of total HAP (hydrogen chloride, hydrogen fluoride, non-mercury metals, mercury, and VOC (for organic HAP) will be reduced by about 1,200 tpy for existing units and 340 tpy for new units. Emissions of mercury will be reduced by about 0.7 tpy per year for existing units and by 0.1 tpy for new units. Emissions of filterable PM will be reduced by about 6,300 tpy for existing units and 1,300 tpy for new units. Emissions of non-mercury metals (*i.e.,* antimony, arsenic, beryllium, cadmium, chromium, cobalt, lead, manganese, nickel, and selenium) will be reduced by about 210 tpy for existing units and will be reduced by 40 tpy for new units. Additionally, EPA has estimated that conducting an annual tune-up could potentially reduce emissions of organic HAP as a result of improved combustion and reduced fuel use. POM reductions are represented by 7–PAH, a group of polycyclic aromatic hydrocarbons. EPA estimates that the energy efficient work and management practices may reduce emissions of 7–PAH by 8 tpy for existing units and that the CO emission limit may reduce emissions of 7–PAH by 1 tpy for new units. A discussion of the methodology used to estimate baseline emissions and emissions reductions is presented in "Estimation of Impacts for Industrial, Commercial, and Institutional Boilers Area Source NESHAP" in the docket.

TABLE 2—SUMMARY OF HAP EMISSIONS REDUCTIONS FOR EXISTING AND NEW SOURCES (TPY)

Source	Subcategory	PM	Non mercury metals [a]	Mercury	POM [b]
Existing Units	Coal	5,350	24	0.6	0.2
	Biomass	760	10	0.003	5
	Oil	230	175	0.03	3
New Units	Coal	510	3	0.09	0.02
	Biomass	690	8	0.0003	0.5
	Oil	100	28	0.005	0.5

[a] Includes antimony, arsenic, beryllium, cadmium, chromium, cobalt, lead, manganese, nickel, and selenium.
[b] POM is represented by total emissions of polycyclic aromatic hydrocarbons (7–PAH). It is assumed that compliance with work practice standard and management practice will reduce fuel usage by 1 percent, which may reduce emissions of 7–PAH by an equivalent amount.

B. What are the cost impacts?

To estimate the national cost impacts of this proposed rule for existing sources, EPA developed several model boilers and determined the cost of control for these model boilers. The EPA assigned a model boiler to each existing unit based on the fuel, size, and current controls. The analysis considered all air pollution control equipment currently in operation at existing boilers. Model costs were then assigned to all existing units that could not otherwise meet the proposed standards. The resulting total national cost impact of this proposed rule for existing units is $696 million dollars in total annualized costs. The total annualized costs (new and existing) for installing controls, conducting biennial tune-ups and an energy assessment, and implementing testing and monitoring requirements, is $1.0 billion. Table 3 of this preamble shows the total annualized cost impacts for each subcategory.

TABLE 3—SUMMARY OF ANNUAL COSTS FOR NEW AND EXISTING SOURCES

Source	Subcategory	Estimated/ projected number of affected units	Total annualized cost ($10^6$$/yr) [a]
Existing Units	Coal	3,710	160
	Biomass	10,958	48
	Oil	168,003	436
Facility Energy Assessment	All		52
New Units [b]	Coal	155	54
	Biomass	200	13
	Oil	6,424	244

[a] TAC does not include fuel savings from improving combustion efficiency.
[b] Impacts for new units assume the number of units online in the first 3 years of this rule (2010 to 2013).

Using DOE projections on fuel expenditures, as well as the history of installation dates of area source boilers in the dataset, the number of additional boilers that could be potentially constructed was estimated. The resulting total national cost impact of this proposed rule on new sources by the 3rd year, 2013, is $311 million dollars in total annualized costs. When accounting for a 1 percent fuel savings resulting from improvements to combustion efficiency, the total national cost impact on new sources is $260 million.

A discussion of the methodology used to estimate cost impacts is presented in the memorandum "Estimation of Impacts for Industrial, Commercial, and Institutional Boilers Area Source NESHAP" in the Docket.

C. What are the economic impacts?

The economic impact analysis (EIA) that is included in the RIA shows that the expected prices for industrial sectors could be 0.01 percent higher and domestic production may fall by less than 0.01 percent. Because of higher domestic prices imports may rise by less than 0.01 percent. Energy prices will not be affected.

Social costs are estimated to also be $0.5 billion in 2008 dollars. This is estimated to made up of a $0.3 billion loss in domestic consumer surplus, a $0.3 billion loss in domestic producer surplus, a $0.1 billion increase in rest of the world surplus, and a $0.1 billion net loss associated with new source costs and fuel savings not modeled in a way that can be used to attribute it to consumers and producers.

EPA performed a screening analysis for impacts on small entities by comparing compliance costs to sales/revenues (*e.g.,* sales and revenue tests). EPA's analysis found the tests were typically higher than 3 percent for small entities included in the screening analysis. EPA has prepared an Initial Regulatory Flexibility Analysis (IRFA) that discusses alternative regulatory or policy options that minimize the rule's small entity impacts. It includes key information about key results from the Small Business Advocacy Review (SBAR) panel.

Precise job effect estimates cannot be estimated with certainty. Morgenstern *et al.* (2002) identify three economic mechanisms by which pollution abatement activities can indirectly influence jobs:

- Higher production costs raise market prices, higher prices reduce consumption, and employment within an industry falls ("demand effect");
- Pollution abatement activities require additional labor services to produce the same level of output ("cost effect"); and
- Post regulation production technologies may be more or less labor intensive (*i.e.,* more/less labor is required per dollar of output) ("factor-shift effect").

Several empirical studies, including Morgenstern *et al.* (2002), suggest the net employment decline is zero or economically small (*e.g.,* Cole and Elliot, 2007; Berman and Bui, 2001). However, others show the question has not been resolved in the literature (Henderson, 1996; Greenstone, 2002). Morgenstern's paper uses a six-year panel (U.S. Census data for plant-level prices, inputs (including labor), outputs, and environmental expenditures) to econometrically estimate the production technologies and industry-level demand elasticities. Their identification strategy leverages repeat plant-level observations over time and uses plant-level and year fixed effects (*e.g.,* plant and time dummy variables). After estimating their model, Morgenstern show and compute the change in employment associated with an additional $1 million ($1987) in environmental spending. Their estimates covers four manufacturing industries (pulp and paper, plastics, petroleum, and steel) and Morgenstern, *et al.* present results separately for the cost, factor shift, and demand effects, as well as the net effect. They also estimate and report an industry-wide average parameter that combines the four industry-wide estimates and weighting them by each industry's share of environmental expenditures.

EPA has most often estimated employment changes associated with plant closures due to environmental regulation or changes in output for the regulated industry (EPA, 1999a; EPA, 2000). This analysis goes beyond what EPA has typically done in two ways. First, because the multimarket model provides estimates for changes in output for sectors not directly regulated, we were able to estimate a more comprehensive "demand effect." Secondly, parameters estimated in the Morgenstern paper were used to

estimate all three effects ("demand," "cost," and "factor shift"). This transfer of results from the Morgenstern study is uncertain but avoids ignoring the "cost effect" and the "factor-shift effect."

We calculated "demand effect" employment changes by assuming that the number of jobs changes proportionally with multi-market model's simulated output changes. These results were calculated for all sectors in the EPA model that show a change in output. The total job losses are estimated to be approximately 1,000.

We also calculated a similar "demand effect" estimate that used the Morgenstern paper. To do this, we multiplied the point estimate for the total demand effect (−3.56 jobs per million ($1987) of environmental compliance expenditure) by the total environmental compliance expenditures used in the partial equilibrium model. For example, the job loss estimate is approximately 1,000 jobs (−3.56 × $0.5 billion × 0.60).[2]

We also present the results of using the Morgenstern paper to estimate employment "cost" and "factor-shift" effects (Table 1). Although using the Morgenstern parameters to estimate these "cost" and "factor-shift" employment changes is uncertain, it is helpful to compare the potential job gains from these effects to the job losses associated with the "demand" effect. Table 1 shows that using the Morgenstern point estimates of parameters to estimate the "cost" and "factor shift" employment gains may be greater than the employment losses using either of the two ways of estimating "demand" employment losses. The 95 percent confidence intervals are shown for all of the estimates based on the Morgenstern parameters. As shown, at the 95 percent confidence level, we cannot be certain if net employment changes are positive or negative.

Although the Morgenstern paper provides additional information about the potential job effects of environmental protection programs, there are several qualifications EPA considered as part of the analysis. First, EPA has used the weighted average parameter estimates for a narrow set of manufacturing industries (pulp and paper, plastics, petroleum, and steel). Absent other data and estimates, this approach seems reasonable and the estimates come from a respected peer-reviewed source. However, EPA acknowledges the proposed rule covers a broader set of industries not considered in original empirical study. By transferring the estimates to other industrial sectors, we make the assumption that estimates are similar in size. In addition, EPA assumes also that Morgenstern et al.'s estimates derived from the 1979–1991 still applicable for policy taking place in 2013, almost 20 years later. Second, the multi-market model only considers near term employment effects in a U.S. economy where production technologies are fixed. As a result, the modeling system places more emphasis on the short term "demand effect" whereas the Morgenstern paper emphasizes other important long term responses. For example, positive job gains associated with "factor shift effects" are more plausible when production choices become more flexible over time and industries can substitute labor for other production inputs. Third, the Morgenstern paper estimates rely on sector demand elasticities that are different from the demand elasticity parameters used in the multi-market model. As a result, the demand effects are not directly comparable with the demand effects estimated by the multi-market model. Fourth, Morgenstern identifies the industry average as economically and statistically insignificant effect (*i.e.,* the point estimates are small, measured imprecisely, and not distinguishable from zero). EPA acknowledges this fact and has reported the 95 percent confidence intervals in Table 1. Fifth, Morgenstern's methodology assumes large plants bear most of the regulatory costs. By transferring the estimates, EPA assumes a similar distribution of regulatory costs by plant size and that the regulatory burden does not disproportionately fall on smaller plants.

TABLE 4—EMPLOYMENT CHANGES: 2013

Estimation method	1,000 jobs
Partial equilibrium model (multiple markets) (demand effect only)	−1.
Literature-based estimate (net effect [A + B + C below])	+1 (−1 to +2).
A. *Literature-based estimate: Demand effect*	−1 (−3 to 0).
B. *Literature-based estimate: Cost effect*	+1 (0 to +2).
C. *Literature-based estimate: Factor shift effect*	+1 (0 to +2).

Note: Totals may not add due to independent rounding. 95 percent confidence intervals for literature-based estimates are shown in parenthesis.

D. What are the social costs and benefits of this proposed rule?

We estimated the monetized benefits of this proposed regulatory action to be $1.0 billion to $2.4 billion (2008$, 3 percent discount rate) in the implementation year (2013). The monetized benefits of this proposed regulatory action at a 7 percent discount rate are $910 million to $2.2 billion (2008$). Using alternate relationships between $PM_{2.5}$ and premature mortality supplied by experts, higher and lower benefits estimates are plausible, but most of the expert-based estimates fall between these two estimates.[3] A summary of the monetized benefits estimates at discount rates of 3 percent and 7 percent is in Table 5 of this preamble.

[2] Since Morgenstern's analysis reports environmental expenditures in $1987, we make an inflation adjustment to the engineering cost analysis using GDP implicit price deflator (64.76/108.48) = 0.60).

[3] Roman *et al.,* 2008. "Expert Judgment Assessment of the Mortality Impact of Changes in Ambient Fine Particulate Matter in the U.S." Environ. Sci. Technol., 42, 7, 2268—2274.

TABLE 5—SUMMARY OF THE MONETIZED BENEFITS ESTIMATES FOR THE PROPOSED BOILER AREA SOURCE RULE IN 2013

[Billions of 2008$] [1]

	Estimated emission reductions (tons per year)	Total monetized benefits (3% discount rate)	Total monetized benefits (7% discount rate)
$PM_{2.5}$	2,682	$0.96 to $2.4	$0.88 to $2.1.
$PM_{2.5}$ Precursors			
SO_2	1,539	$0.31 to $0.76	$0.28 to $0.68.
VOC	1,179	$0.01 to $0.04	$0.01 to $0.03.
Total		$1.0 to $2.4	$0.91 to $2.2.

[1] All estimates are for the implementation year (2013), and are rounded to two significant figures so numbers may not sum across rows. All fine particles are assumed to have equivalent health effects, but the benefit-per-ton estimates vary between precursors because each ton of precursor reduced has a different propensity to form $PM_{2.5}$. Benefits from reducing hazardous air pollutants (HAPs), ecosystem effects, and visibility impairment are not included.

These benefits estimates represent the total monetized human health benefits for populations exposed to less $PM_{2.5}$ in 2013 from controls installed to reduce air pollutants in order to meet these standards. These estimates are calculated as the sum of the monetized value of avoided premature mortality and morbidity associated with reducing a ton of $PM_{2.5}$ and $PM_{2.5}$ precursor emissions. To estimate human health benefits derived from reducing $PM_{2.5}$ and $PM_{2.5}$ precursor emissions, we utilized the general approach and methodology laid out in Fann *et al.* (2009).[4]

To generate the benefit-per-ton estimates, we used a model to convert emissions of direct $PM_{2.5}$ and $PM_{2.5}$ precursors into changes in ambient $PM_{2.5}$ levels and another model to estimate the changes in human health associated with that change in air quality. Finally, the monetized health benefits were divided by the emission reductions to create the benefit-per-ton estimates. Even though we assume that all fine particles have equivalent health effects, the benefit-per-ton estimates vary between precursors because each ton of precursor reduced has a different propensity to form $PM_{2.5}$. For example, SO_X has a lower benefit-per-ton estimate than direct $PM_{2.5}$ because it does not form as much $PM_{2.5}$, thus the exposure would be lower, and the monetized health benefits would be lower.

For context, it is important to note that the magnitude of the PM benefits is largely driven by the concentration response function for premature mortality. Experts have advised EPA to consider a variety of assumptions, including estimates based both on empirical (epidemiological) studies and judgments elicited from scientific experts, to characterize the uncertainty in the relationship between $PM_{2.5}$ concentrations and premature mortality. For this proposed rule we cite two key empirical studies, one based on the American Cancer Society cohort study [5] and the extended Six Cities cohort study.[6] In the RIA for this proposed rule, which is available in the docket, we also include benefits estimates derived from expert judgments and other assumptions.

This analysis does not include the type of detailed uncertainty assessment found in the 2006 $PM_{2.5}$ NAAQS RIA because we lack the necessary air quality input and monitoring data to run the benefits model. However, the 2006 $PM_{2.5}$ NAAQS benefits analysis [7] provides an indication of the sensitivity of our results to various assumptions.

It should be emphasized that the monetized benefits estimates provided above do not include benefits from several important benefit categories, including reducing other air pollutants, ecosystem effects, and visibility impairment. The benefits from reducing carbon monoxide and hazardous air pollutants have not been monetized in this analysis, including reducing 39,000 tons of carbon monoxide, 0.75 ton of mercury, and 130 tons of HCl, 5 tons of HF, and 460 grams of dioxins/furans each year. Although we do not have sufficient information or modeling available to provide monetized estimates for this rulemaking, we include a qualitative assessment of the health effects of these air pollutants in the Regulatory Impact Analysis (RIA) for this proposed rule, which is available in the docket.

The social costs of this proposed rulemaking are estimated to be $0.5 billion (2008$) in the implementation year, and the monetized benefits are $1.0 billion to $2.4 billion (2008$, 3 percent discount rate) for that same year. The benefits at a 7 percent discount rate are $910 million to $2.2 billion (2008$). Thus, net benefits of this rulemaking are estimated at $500 million to $1.9 billion (2008$, 3 percent discount rate) and $400 million to $1.7 billion (2008$, 7 percent discount rate).

A summary of the monetized benefits, social costs, and net benefits at discount rates of 3 percent and 7 percent is in Table 6 of this preamble.

[4] Fann, N., C.M. Fulcher, B.J. Hubbell. 2009. "The influence of location, source, and emission type in estimates of the human health benefits of reducing a ton of air pollution." Air Qual Atmos Health (2009) 2:169–176.

[5] Pope *et al.,* 2002. "Lung Cancer, Cardiopulmonary Mortality, and Long-term Exposure to Fine Particulate Air Pollution." Journal of the American Medical Association 287:1132–1141.

[6] Laden *et al.,* 2006. "Reduction in Fine Particulate Air Pollution and Mortality." *American Journal of Respiratory and Critical Care Medicine.* 173:667–672.

[7] U.S. Environmental Protection Agency, 2006. Final Regulatory Impact Analysis: $PM_{2.5}$ NAAQS. Prepared by Office of Air and Radiation. October. Available on the Internet at *http://www.epa.gov/ttn/ecas/ria.html.*

TABLE 6—SUMMARY OF THE MONETIZED BENEFITS, SOCIAL COSTS, AND NET BENEFITS FOR THE BOILER AREA SOURCE RULE IN 2013

[Billions of 2008$] [1]

	3% Discount rate	7% Discount rate
Proposed Option		
Total Monetized Benefits [2]	$1.0 to $2.4	$0.91 to $2.2.
Total Social Costs [3]	$0.50	$0.5.
Net Benefits	$0.5 to $1.9	$0.4 to $1.7.
Non-monetized Benefits	39,000 tons of carbon monoxide. 130 tons of HCl. 5 tons of HF. 0.75 tons of mercury. 250 tons of other metals. 470 grams of dioxins/furans. Health effects from NO_2 and SO_2 exposure. Ecosystem effects. Visibility impairment.	

[1] All estimates are for the implementation year (2015), and are rounded to two significant figures.

[2] The total monetized benefits reflect the human health benefits associated with reducing exposure to $PM_{2.5}$ through reductions of directly emitted $PM_{2.5}$ and $PM_{2.5}$ precursors such as NO_X and SO_2. It is important to note that the monetized benefits include many but not all health effects associated with $PM_{2.5}$ exposure.

[3] The methodology used to estimate social costs for one year in the multimarket model using surplus changes results in the same social costs for both discount rates.

For more information on the benefits analysis, please refer to the RIA for this rulemaking, which is available in the docket.

E. What are the water and solid waste impacts?

The EPA estimated that no additional water usage would result from the MACT floor level of control or GACT requirement. The fabric filter, multiclone or combustion control devices used to meet the standards of this proposed rule do not require any water to operate, nor do they generate any wastewater.

The EPA estimated the additional solid waste that would result from this proposed rule to be 14,300 tpy for existing sources due to the dust and flyash captured by mercury and PM control devices. The cost of handling the additional solid waste generated from existing sources is $602,000 per year. For new sources installed by 2013, the EPA estimated the additional solid waste that would result from this proposed rule to be 1,800 tpy for new sources due to the dust and flyash captured by mercury and PM control devices. The cost of handling the additional solid waste generated from existing sources is $75,900 per year. These costs are also accounted for in the control costs estimates.

A discussion of the methodology used to estimate impacts is presented in "Estimation of Impacts for Industrial, Commercial, and Institutional Boilers Area Source NESHAP" in the Docket.

F. What are the energy impacts?

The EPA expects an increase of approximately 206 million kilowatt hours (kWh) in national annual energy usage from existing sources as a result of this proposed rule. The increase results from the electricity required to operate control devices installed to meet this proposed rule, such as fabric filters. Additionally, for new sources installed by 2013, EPA expects an increase of approximately 22 million kWh in national annual energy usage in order to operate the control devices.

The Department of Energy has conducted energy assessments at selected manufacturing facilities and reports that facilities can reduce fuel/energy use by 10 to 15 percent by using best practices to increase their energy efficiency. Additionally, the EPA expects work practice standards such as boilers tune-ups and combustion controls such as new replacement burners and will improve the efficiency of boilers. The EPA estimates existing area source facilities can save 20 trillion BTU of fuel each year. For new sources online by 2013, the EPA estimates 2.3 trillion BTU per year of fuel can be conserved. This fuel savings estimates includes only those fuel savings resulting from liquid and coal fuels and it is based on the assumption that the work practice standards will achieve 1 percent improvement in efficiency.

VII. Relationship of This Proposed Action to CAA Section 112(c)(6)

CAA section 112(c)(6) requires EPA to identify categories of sources of seven specified pollutants to assure that sources accounting for not less than 90 percent of the aggregate emissions of each such pollutant are subject to standards under CAA Section 112(d)(2) or 112(d)(4). EPA has identified "Industrial Coal Combustion," "Industrial Oil Combustion," Industrial Wood/Wood Residue Combustion," "Commercial Coal Combustion," "Commercial Oil Combustion," and "Commercial Wood/Wood Residue Combustion" as source categories that emits two of the seven CAA Section 112(c)(6) pollutants: POM and mercury. (The POM emitted is composed of 16 polyaromatic hydrocarbons (PAH) and extractable organic matter (EOM).) In the **Federal Register** notice *Source Category Listing for Section 112(d)(2) Rulemaking Pursuant to Section 112(c)(6) Requirements,* 63 FR 17838, 17849, Table 2 (1998), EPA identified "Industrial Coal Combustion," "Industrial Oil Combustion," "Industrial Wood/Wood Residue Combustion," "Commercial Coal Combustion," "Commercial Oil Combustion," and "Commercial Wood/Wood Residue Combustion" as source category "subject to regulation" for purposes of CAA Section 112(c)(6) with respect to the CAA Section 112(c)(6) pollutants that these units emit.

Specifically, as byproducts of combustion, the formation of POM is effectively reduced by the combustion and post-combustion practices required to comply with the CAA Section 112 standards. Any POM that do form during combustion are further

controlled by the various post-combustion controls. The add-on PM control systems (fabric filter) used to reduce mercury and/or PM emissions further reduce emissions of these organic pollutants, as is evidenced by performance data. Specifically, the emission tests obtained at currently operating major source boilers show that the proposed MACT regulations for area source boilers will reduce Hg emissions by about 86 percent. It is, therefore, reasonable to conclude that POM emissions will be substantially controlled. Thus, while this proposed rule does not identify specific numerical emission limits for POM, emissions of POM are, for the reasons noted below, nonetheless "subject to regulation" for purposes of CAA section 112(c)(6).

In lieu of establishing numerical emissions limits for pollutants such as POM, we regulate surrogate substances. While we have not identified specific numerical limits for POM, we believe CO serves as an effective surrogate for this HAP, because CO, like POM, is formed as a product of incomplete combustion.

Consequently, we have concluded that the emissions limits for CO function as a surrogate for control of POM, such that it is not necessary to propose numerical emissions limits for POM with respect to boilers to satisfy CAA Section 112(c)(6).

To further address POM and mercury emissions, this proposed rule also includes an energy assessment provision that encourages modifications to the facility to reduce energy demand that lead to these emissions.

VIII. Statutory and Executive Order Review

A. Executive Order 12866: Regulatory Planning and Review

Under Executive Order 12866 (58 FR 51735, October 4, 1993), this action is an "economically significant regulatory action" because it is likely to have an annual effect on the economy of $100 million or more or adversely affect in a material way the economy, a sector of the economy, productivity, competition, jobs, the environment, public health or safety, or State, local, or tribal governments or communities.

Accordingly, EPA submitted this action to OMB for review under EO 12866 and any changes in response to OMB recommendations have been documented in the docket for this action. For more information on the costs and benefits for this rule, please refer to Table 5 of this preamble.

B. Paperwork Reduction Act

The information collection requirements in this proposed rule have been submitted for approval to OMB under the *Paperwork Reduction Act*, 44 U.S.C. 3501 *et seq.* The Information Collection Request (ICR) document prepared by EPA has been assigned EPA ICR number 2253.01.

The recordkeeping and reporting requirements in this proposed rule would be based on the information collection requirements in EPA's NESHAP General Provisions (40 CFR part 63, subpart A). The recordkeeping and reporting requirements in the General Provisions are mandatory pursuant to section 114 of the CAA (42 U.S.C. 7414). All information other than emissions data submitted to EPA pursuant to the information collection requirements for which a claim of confidentiality is made is safeguarded according to CAA section 114(c) and EPA's implementing regulations at 40 CFR part 2, subpart B.

This proposed NESHAP would require applicable one-time notifications according to the NESHAP General Provisions. Facility owners or operators would be required to include compliance certifications for the work practices and management practices in their Notifications of Compliance Status. Recordkeeping would be required to demonstrate compliance with emission limits, work practices, management practices, monitoring, and applicability provisions. New affected facilities would be required to comply with the requirements for startup, shutdown, and malfunction plans/reports and to submit a compliance report if a deviation occurred during the semiannual reporting period.

The annual monitoring, reporting, and recordkeeping burden for this collection (averaged over the first 3 years after the effective date of the standards) is estimated to be $523 million. This includes 3.6 million labor hours per year at a cost of $336 million and total non-labor capital costs of $186 million per year. This estimate includes initial and annual performance tests, conducting and documenting an energy assessment, conducting and documenting a tune-up, semiannual excess emission reports, maintenance inspections, developing a monitoring plan, notifications, and recordkeeping. Monitoring, testing, tune-up and energy assessment costs were also included in the cost estimates presented in the control costs impacts estimates in section VI.B of this preamble. The total burden for the Federal government (averaged over the first 3 years after the effective date of the standard) is estimated to be 767,403 hours per year at a total labor cost of $37.6 million per year.

Burden means the total time, effort, or financial resources expended by persons to generate, maintain, retain, or disclose or provide information to or for a Federal agency. This includes the time needed to review instructions; develop, acquire, install, and utilize technology and systems for the purposes of collecting, validating, and verifying information, processing and maintaining information, and disclosing and providing information; adjust the existing ways to comply with any previously applicable instructions and requirements; train personnel to be able to respond to a collection of information; search data sources; complete and review the collection of information; and transmit or otherwise disclose the information.

An agency may not conduct or sponsor, and a person is not required to respond to, a collection of information unless the collection displays a currently valid OMB control number. The OMB control numbers for EPA's regulations in 40 CFR part 63 are listed in 40 CFR part 9.

To comment on EPA's need for this information, the accuracy of the provided burden estimates, and any suggested methods for minimizing respondent burden, including the use of automated collection techniques, EPA has established a public docket for this action, which includes this ICR, under Docket ID number EPA–HQ–OAR–2006–0790. Submit any comments related to the ICR to EPA and OMB. See **ADDRESSES** section at the beginning of this preamble for where to submit comments to EPA. Send comments to OMB at the Office of Information and Regulatory Affairs, Office of Management and Budget, 725 17th Street, NW., Washington, DC 20503, Attention: Desk Office for EPA. Since OMB is required to make a decision concerning the ICR between 30 and 60 days after June 4, 2010, a comment to OMB is best assured of having its full effect if OMB receives it by July 6, 2010. The final rule will respond to any OMB or public comments on the information collection requirements contained in this proposal.

C. Regulatory Flexibility Act (RFA)

The RFA generally requires an agency to prepare a regulatory flexibility analysis of any rule subject to notice and comment rulemaking requirements under the Administrative Procedure Act or any other statute unless the agency certifies that the rule will not have a

significant economic impact on a substantial number of small entities. Small entities include small businesses, small organizations, and small governmental jurisdictions.

For purposes of assessing the impacts of today's proposed rule on small entities, small entity is defined as: (1) A small business according to Small Business Administration (SBA) size standards by the North American Industry Classification System category of the owning entity. The range of small business size standards for the 40 affected industries ranges from 500 to 1,000 employees, except for petroleum refining and electric utilities. In these latter two industries, the size standard is 1,500 employees and a mass throughput of 75,000 barrels/day or less, and 4 million kilowatt-hours of production or less, respectively; (2) a small governmental jurisdiction that is a government of a city, county, town, school district or special district with a population of less than 50,000; and (3) a small organization that is any not-for-profit enterprise which is independently owned and operated and is not dominant in its field.

Because an initial screening analysis for impact on small entities indicated a likely significant impact for substantial numbers EPA convened a SBAR Panel to obtain advice and recommendation of representatives of the small entities that potentially would be subject to the requirements of this rule.

(1) Panel Process and Panel Outreach

As required by section 609(b) of the RFA, as amended by SBREFA, EPA also has conducted outreach to small entities and. On January 22, 2009 EPA's Small Business Advocacy Chairperson convened a Panel under section 609(b) of the RFA. In addition to the Chair, the Panel consisted of the Director of the Sector Policies and Programs Division within EPA's Office of Air and Radiation, the Chief Counsel for Advocacy of the Small Business Administration, and the Administrator of the Office of Information and Regulatory Affairs within the Office of Management and Budget.

As part of the SBAR Panel process we conducted outreach with representatives from 14 various small entities that would be affected by this rule. The small entity representatives (SERs) included associations representing schools, churches, hotels/motels, wood product facilities and manufacturers of home furnishings. We met with these SERs to discuss the potential rulemaking approaches and potential options to decrease the impact of the rulemaking on their industries/sectors. We distributed outreach materials to the SERs; these materials included background on the rulemaking, possible regulatory approaches, preliminary cost and economic impacts, and possible rulemaking alternatives. The Panel met with SERs from the industries that will be impacted directly by this rule on February 10, 2009 to discuss the outreach materials and receive feedback on the approaches and alternatives detailed in the outreach packet. (EPA also met with SERs on November 13, 2008 for an initial outreach meeting.) The Panel received written comments from the SERs following the meeting in response to discussions at the meeting and the questions posed to the SERs by the Agency. The SERs were specifically asked to provide comment on regulatory alternatives that could help to minimize the rule's impact on small businesses.

(2) Panel Recommendations for Small Business Flexibilities

The Panel recommended that EPA consider and seek comment on a wide range of regulatory alternatives to mitigate the impacts of the rulemaking on small businesses, including those flexibility options described below. The following section summarizes the SBAR Panel recommendations. EPA has proposed provisions consistent with each of the Panel's recommendations regarding area source facilities.

Consistent with the RFA/SBREFA requirements, the Panel evaluated the assembled materials and small-entity comments on issues related to elements of the IRFA. A copy of the Final Panel Report (including all comments received from SERs in response to the Panel's outreach meeting as well as summaries of both outreach meetings that were held with the SERs is included in the docket for this proposed rule. A summary of the Panel recommendations is detailed below. As noted above, this proposal includes proposed provisions for each of the Panel recommendations regarding area source facilities.

(a) Work Practice Standards

The panel recommended that EPA consider requiring annual tune-ups, including standardized criteria outlining proper tune-up methods targeted at smaller boiler operators. The panel further recommended that EPA take comment on the efficacy of energy assessments/audits at improving combustion efficiency and the cost of performing the assessments, especially to smaller boiler operators.

A work practice standard, instead of MACT emission limits, may be proposed if it can be justified under CAA section 112(h), that is, it is impracticable to enforce the emission standards due to technical and economic limitations. Work practice standards could reduce fuel use and improve combustion efficiency which would result in reduced emissions.

In general, SERs commented that a regulatory approach to improve combustion efficiency, such as work practice standards, would have positive impacts with respect to the environment and energy use and save on compliance costs. The SERs were concerned with work practice standards that would require energy assessments and implementation of assessment findings. The basis of these concerns rested upon the uncertainty that there is no guarantee that there are available funds to implement a particular assessment's findings.

(b) Subcategorization

The Panel recommended that EPA allow subcategorizations suggested by the SERs, unless EPA finds that a subcategorization is inconsistent with the Clean Air Act.

SERs commented that subcategorization is a key concept that could ensure that like boilers are compared with similar boilers so that MACT floors are more reasonable and could be achieved by all units within a subcategory using appropriate emission reduction strategies. SERs commented that EPA should subcategorize based on fuel type, boiler type, duty cycle, and location.

(c) Compliance Costs

The Panel recommended that EPA carefully weigh the potential burden of compliance requirements and consider for small entities options such as, emission averaging within facility, reduced monitoring/testing requirements, or allowing more time for compliance.

SERs noted that recordkeeping activities, as written in the vacated boiler MACT, would be especially challenging for small entities that do not have a dedicated environmental affairs department.

D. Unfunded Mandates Reform Act of 1995

Title II of the Unfunded Mandates Reform Act of 1995 (UMRA), Public Law 104–4, establishes requirements for Federal agencies to assess the effects of their regulatory actions on State, local, and tribal governments and the private sector. Under section 202 of the UMRA, we generally must prepare a written statement, including a cost-benefit

analysis, for proposed and final rules with "Federal mandates" that may result in expenditures to State, local, and tribal governments, in the aggregate, or to the private sector, of $100 million or more in any 1 year. Before promulgating a rule for which a written statement is needed, section 205 of the UMRA generally requires us to identify and consider a reasonable number of regulatory alternatives and adopt the least costly, most cost-effective or least burdensome alternative that achieves the objectives of the rule. The provisions of section 205 do not apply when they are inconsistent with applicable law. Moreover, section 205 allows us to adopt an alternative other than the least costly, most cost-effective or least burdensome alternative if the Administrator publishes with the final rule an explanation why that alternative was not adopted. Before we establish any regulatory requirements that may significantly or uniquely affect small governments, including tribal governments, we must develop a small government agency plan under section 203 of the UMRA. The plan must provide for notifying potentially affected small governments, enabling officials of affected small governments to have meaningful and timely input in the development of regulatory proposals with significant Federal intergovernmental mandates, and informing, educating, and advising small governments on compliance with the regulatory requirements.

We have determined that this proposed rule contains a Federal mandate that may result in expenditures of $100 million or more for State, local, and Tribal governments, in the aggregate, or the private sector in any 1 year. Accordingly, we have prepared a written statement entitled "Unfunded Mandates Reform Act Analysis for the Proposed Industrial Boilers and Process Heaters NESHAP" under section 202 of the UMRA which is summarized below.

1. Statutory Authority

As discussed in section I of this preamble, the statutory authority for this proposed rulemaking is section 112 of the CAA. Title III of the CAA Amendments was enacted to reduce nationwide air toxic emissions. Section 112(b) of the CAA lists the 188 chemicals, compounds, or groups of chemicals deemed by Congress to be HAP. These toxic air pollutants are to be regulated by NESHAP.

Section 112(d) of the CAA requires us to establish NESHAP for both major and area sources of HAP that are listed for regulation under CAA section 112(c). CAA section 112(k)(3)(B) calls for EPA to identify at least 30 HAP which, as the result of emissions from area sources, pose the greatest threat to public health in the largest number of urban areas. CAA section 112(c)(3) requires EPA to list sufficient categories or subcategories of area sources to ensure that area sources representing 90 percent of the emissions of the 30 urban HAP are subject to regulation.

Under CAA section 112(d)(5), we may elect to promulgate standards or requirements for area sources based on GACT used by those sources to reduce emissions of HAP. Determining what constitutes GACT involves considering the control technologies and management practices that are generally available to the area sources in the source category. We also consider the standards applicable to major sources in the analogous source category and, as appropriate, the control technologies and management practices at area and major sources in similar categories, to determine if the standards, technologies, and/or practices are transferable and generally available to area sources. In determining GACT for a particular area source category, we consider the costs and economic impacts of available control technologies and management practices on that category.

While GACT may be a basis for standards for most types of HAP emitted from area source, CAA section 112(c)(6) requires that source categories accounting for emissions of the HAP listed in CAA section 112(c)(6) be subject to standards under CAA section 112(d)(2) for the listed pollutants. Thus, CAA section 112(c)(6) requires that emissions of each listed HAP for the listed categories be subject to MACT regulation. The CAA section 112(c)(6) list of source categories includes industrial boilers and institutional/commercial boilers. Within these two source categories, coal combustion, oil combustion, and wood combustion have been on the CAA section 112(c)(6) list because of emissions of mercury and POM. We currently believe that regulation of coal-fired boilers will ensure that we fulfill our obligation under CAA section 112(c)(6) with respect to mercury reductions. Consequently, we deem it reasonable to propose to regulate the coal-fired boilers under MACT, rather than the biomass and oil-fired boilers, to obtain additional mercury reductions towards achieving the CAA section 112(c)(6) obligation. We propose to regulate biomass-fired and oil-fired boilers under GACT.

This proposed NESHAP would apply to all existing and new industrial boilers, institutional boilers, and commercial boilers located at area sources. In compliance with section 205(a) of the UMRA, we identified and considered a reasonable number of regulatory alternatives. Additional information on the costs and environmental impacts of these regulatory alternatives is presented in the docket.

The regulatory alternative upon which the proposed standards are based represents the MACT floor for the listed CAA section 112(c)(6) pollutants (mercury and POM) and GACT for the other urban HAP which formed the basis for the listing of these two area source categories. The proposed standards would require new coal-fired boilers to meet MACT-based emission limits for mercury and CO (as a surrogate for POM) and GACT-based emission limits for PM (as a surrogate for urban metals). New biomass and oil-fired boilers would be required to meet MACT-based CO emission limits and GACT-based emission limits for PM. The emission limits for existing area source boilers are only applicable to area source boilers that have a designed heat input capacity of 10 MMBtu/h or greater. Existing large coal-fired boilers would be required to meet MACT-based emission limits for mercury and CO, and existing large biomass and oil-fired boilers would be subject to MACT-based CO emission limits. As allowed under CAA section 112(h), a work practice standard requiring the implementation of a tune-up program is being proposed for existing area source boilers with a designed heat input capacity of less than 10 MMBtu/h. An additional "beyond-the-floor" standard is being proposed for existing area source facilities having an affected boiler with a heat input capacity of 10 MMBtu/h or greater that requires the performance of an energy assessment on the boiler and the facility to identify cost-effective energy conservation measures.

2. Social Costs and Benefits

The regulatory impact analysis prepared for the proposed rule including the Agency's assessment of costs and benefits, is detailed in the "Regulatory Impact Analysis for the Proposed Industrial Boilers and Process Heaters MACT" in the docket. Based on estimated compliance costs associated with the proposed rule and the predicted change in prices and production in the affected industries, the estimated social costs of the proposed rule are $0.5 billion (2008 dollars).

It is estimated that 3 years after implementation of the proposed rule, HAP would be reduced by hundreds of

tons, including reductions in metallic HAP including mercury, hydrochloric acid, hydrogen fluoride, and several other organic HAP from area source boilers. Studies have determined a relationship between exposure to these HAP and the onset of cancer, however, the Agency is unable to provide a monetized estimate of the HAP benefits at this time. In addition, there are reductions in $PM_{2.5}$ and in SO_2 that would occur, including 2,700 tons of $PM_{2.5}$ and 1,500 tons of SO_2. These reductions occur within 3 years after the implementation of the proposed regulation and are expected to continue throughout the life of the affected sources. The major health effect associated with reducing $PM_{2.5}$ and $PM_{2.5}$ precursors (such as SO_2) is a reduction in premature mortality. Other health effects associated with $PM_{2.5}$ emission reductions include avoiding cases of chronic bronchitis, heart attacks, asthma attacks, and work-lost days (*i.e.,* days when employees are unable to work). While we are unable to monetize the benefits associated with the HAP emissions reductions, we are able to monetize the benefits associated with the $PM_{2.5}$ and SO_2 emissions reductions. For SO_2 and $PM_{2.5}$, we estimated the benefits associated with health effects of PM but were unable to quantify all categories of benefits (particularly those associated with ecosystem and visibility effects). Our estimates of the monetized benefits in 2013 associated with the implementation of the proposed alternative range from $1.0 billion (2008 dollars) to $2.4 billion (2008 dollars) when using a 3 percent discount rate (or from $0.9 billion (2008 dollars) to $2.2 billion (2008 dollars) when using a 7 percent discount rate. The general approach used to value benefits is discussed in more detail earlier in this preamble. For more detailed information on the benefits estimated for the proposed rulemaking, refer to the RIA in the docket.

3. Future and Disproportionate Costs

The Unfunded Mandates Reform Act requires that we estimate, where accurate estimation is reasonably feasible, future compliance costs imposed by the proposed rule and any disproportionate budgetary effects. Our estimates of the future compliance costs of the proposed rule are discussed previously in this preamble.

We do not believe that there will be any disproportionate budgetary effects of the proposed rule on any particular areas of the country, State or local governments, types of communities (*e.g.,* urban, rural), or particular industry segments. See the results of the "Economic Impact Analysis of the Proposed Industrial Boilers and Process Heaters NESHAP," the results of which are discussed previously in this preamble.

4. Effects on the National Economy

The Unfunded Mandates Reform Act requires that we estimate the effect of the proposed rule on the national economy. To the extent feasible, we must estimate the effect on productivity, economic growth, full employment, creation of productive jobs, and international competitiveness of the U.S. goods and services, if we determine that accurate estimates are reasonably feasible and that such effect is relevant and material.

The nationwide economic impact of the proposed rule is presented in the "Economic Impact Analysis for the Industrial Boilers and Process Heaters MACT" in the docket. This analysis provides estimates of the effect of the proposed rule on some of the categories mentioned above. The results of the economic impact analysis are summarized previously in this preamble. The results show that there will be a small impact on prices and output (less than 0.01 percent). In addition, there should be little impact on energy markets (in this case, coal, natural gas, petroleum products, and electricity). Hence, the potential impacts on the categories mentioned above should be small.

5. Consultation With Government Officials

The Unfunded Mandates Reform Act requires that we describe the extent of the Agency's prior consultation with affected State, local, and tribal officials, summarize the officials' comments or concerns, and summarize our response to those comments or concerns. In addition, section 203 of the UMRA requires that we develop a plan for informing and advising small governments that may be significantly or uniquely impacted by a proposal. Consistent with the intergovernmental consultation provisions of section 204 of the UMRA, EPA has initiated consultations with governmental entities affected by this proposed rule. EPA invited the following 10 national organizations representing State and local elected officials to a meeting held on March 24, 2010 in Washington DC: (1) National Governors Association; (2) National Conference of State Legislatures, (3) Council of State Governments, (4) National League of Cities, (5) U.S. Conference of Mayors, (6) National Association of Counties, (7) International City/County Management Association, (8) National Association of Towns and Townships, (9) County Executives of America, and (10) Environmental Council of States. These 10 organizations of elected State and local officials have been identified by EPA as the "Big 10" organizations appropriate to contact for purpose of consultation with elected officials. The purposes of the consultation were to provide general background on the proposal, answer questions, and solicit input from State/local governments. During the meeting, officials expressed uncertainty with regard to how boilers owned/operated by State and local entities would be impacted, as well as with regard to the potential burden associated with implementing the rule on State and local entities. To that end, officials requested and EPA provided (1) model boiler costs, (2) inventory of area source boilers (coal, oil, biomass only) for the 13 States for which we have an inventory, and (3) information on potential size of boilers used for various facility types and sizes. EPA has not received additional questions or requests from State or local officials.

Consistent with section 205, EPA has identified and considered a reasonable number of regulatory alternatives. Because an initial screening analysis for impact on small entities indicated a likely significant impact for substantial numbers EPA convened a SBAR Panel to obtain advice and recommendation of representatives of the small entities that potentially would be subject to the requirements of the rule. As part of that process, EPA considered several options. Those options included establishing emission limits, establishing work practice standards, and establishing work practice standards and requiring an energy assessment. The regulatory alternative selected is a combination of the options considered and includes proposed provisions regarding each of the SBAR Panel's recommendations for area source boilers. The recommendations regard subcategorization, work practice standards, and compliance costs (see section VIII.C. of this preamble for more detail).

EPA determined subcategorization based on boiler type to be appropriate because different types of units have different emission characteristics which may affect the feasibility and effectiveness of emission control. Thus, the proposal identifies three subcategories of area source boilers: (1) Boilers designed for coal firing, (2) boilers designed for biomass firing, and (3) boilers designed for oil firing.

The regulatory alternative upon which the proposed standards are based represents the MACT floor for mercury for coal-fired boilers, the MACT floor for POM (CO is used as a surrogate for POM) for coal, biomass, and oil-fired boilers, and GACT for the other urban HAP (PM is used as a surrogate for urban HAP metals and CO is used as a surrogate for urban organic pollutants) for coal, biomass, and oil-fired boilers. The emission limits for existing area source boilers are only applicable to area source boilers that have a designed heat input capacity of 10 MMBtu/h or greater. A work practice standard (for mercury from coal-fired boilers and for POM from all boilers) or management practice (for all other HAP, including mercury from biomass-fired and oil-fired boilers) requiring the implementation of a tune-up program is being proposed for existing area source boilers with a designed heat input capacity of less than 10 MMBtu/h. An additional "beyond-the-floor" standard is being proposed for existing area source facilities having an affected boiler with a heat input capacity of 10 MMBtu/h or greater that requires the performance of an energy assessment on the boiler and the facility to identify cost-effective energy conservation measures.

The proposed use of surrogate pollutants would result in reduced compliance costs because testing would only be required for the surrogate pollutants (*i.e.,* CO and PM) versus for the HAP (*i.e.,* POM and metals). The proposed work practice standard/management practice also would result in reduced compliance costs with respect to monitoring/testing for the smaller existing area source boilers. EPA's proposed exemption of most area source facilities from title V permit requirements also would reduce burden on area source boiler facilities.

This proposed rule is not subject to the requirements of section 203 of UMRA because it contains no regulatory requirements that might significantly or uniquely affect small governments. While some small governments may have boilers that would be affected by the proposed rule, EPA's analysis shows that other public facilities that are located at area source facilities owned by small entities would have cost-to-revenue ratios exceeding 10 percent. Hospitals' and schools' revenue tests fall below 1 percent. Because the proposed rule's requirements apply equally to boilers owned and/or operated by governments and to boilers owned and/or operated by private entities, there would be no requirements that uniquely apply to such governments or impose any disproportionate impacts on them.

E. Executive Order 13132: Federalism

Under Executive Order 13132, EPA may not issue an action that has federalism implications, that imposes substantial direct compliance costs, and that is not required by statute, unless the Federal government provides the funds necessary to pay the direct compliance costs incurred by State and local governments, or EPA consults with State and local officials early in the process of developing the proposed action.

EPA has concluded that this action may have federalism implications, because it may impose substantial direct compliance costs on State or local governments, and the Federal government will not provide the funds necessary to pay those costs. Accordingly, EPA provides the following federalism summary impact statement as required by section 6(b) of Executive Order 13132.

Based on the estimates in EPA's RIA for today's action, the proposed regulatory option, if promulgated, may have federalism implications because the option may impose approximately $416 million in annual direct compliance costs on an estimated 57,000 State or local governments. Boiler inventories for the health services, educational services, and government-owned buildings sectors from 13 States were used to estimate the nationwide number of potentially impacted State or local governments. Because the inventories for these sectors include privately owned and Federal government owned facilities, the estimate may include many facilities that are not State or local government owned. Table 7 of this preamble presents estimates of the number of potentially impacted State and local governments and their potential annual compliance costs for each of the three sectors. In addition to an estimate of the total number of potentially impacted facilities, estimates for facilities with small boilers and for facilities with large boilers are presented. Small boilers (boilers with heat input capacity of less than 10 MMBtu/h) would be subject to a work practice standard that requires a boiler tune-up every 2 years. Large coal-fired boilers (boilers with heat input capacity of 10 MMBtu/h or greater) would be subject to emission limits for mercury and CO, while large biomass and oil-fired boilers would be subject to emission limits for CO. All facilities with large boilers would be required to conduct a one-time energy assessment.

TABLE 7—STATE AND LOCAL GOVERNMENTS POTENTIALLY IMPACTED BY THE PROPOSED STANDARDS FOR BOILERS AT AREA SOURCE FACILITIES

Sector	Number of potentially impacted facilities			Annual compliance costs to meet standards
	Total	Small	Large	
Health Services	17,206	15,293	1,913	$143 million.
Educational Services	34,052	33,303	749	$200 million.
Government-Owned Buildings	5,796	5,098	698	$73 million.
Total	57,054	53,694	3,360	$416 million.

EPA consulted with State and local officials in the process of developing the proposed action to permit them to have meaningful and timely input into its development. EPA met with 10 national organizations representing State and local elected officials to provide general background on the proposal, answer questions, and solicit input from State/local governments. The UMRA discussion in this preamble includes a description of the consultation.

In the spirit of Executive Order 13132, and consistent with EPA policy to promote communications between EPA and State and local governments, EPA specifically solicits comment on this proposed action from State and local officials.

F. Executive Order 13175: Consultation and Coordination with Indian Tribal Governments

Executive Order 13175 (65 FR 67249, November 9, 2000), requires EPA to develop an accountable process to

ensure "meaningful and timely input by tribal officials in the development of regulatory policies that have tribal implications." The proposed rule does not have tribal implications, as specified in Executive Order 13175 (65 FR 67249, November 9, 2000). It will not have substantial direct effects on tribal governments, on the relationship between the Federal government and Indian tribes, or on the distribution of power and responsibilities between the Federal government and Indian tribes, as specified in Executive Order 13175. The proposed rule imposes requirements on owners and operators of specified area sources and not tribal governments. We do not know of any industrial, commercial, or institutional boilers owned or operated by Indian tribal governments. However, if there are any, the effect of the proposed rule on communities of tribal governments would not be unique or disproportionate to the effect on other communities. Thus, Executive Order 13175 does not apply to the proposed rule. EPA specifically solicits additional comment on the proposed rule from tribal officials.

G. Executive Order 13045: Protection of Children From Environmental Health Risks and Safety Risks

Executive Order 13045 (62 FR 19885, April 23, 1997) applies to any rule that: (1) Is determined to be "economically significant" as defined under Executive Order 12866, and (2) concerns an environmental health or safety risk that EPA has reason to believe may have a disproportionate effect on children. If the regulatory action meets both criteria, the Agency must evaluate the environmental health or safety effects of the planned rule on children, and explain why the planned regulation is preferable to other potentially effective and reasonably feasible alternatives considered by the Agency.

The proposed rule is not subject to Executive Order 13045 because the Agency does not believe the environmental health risks or safety risks addressed by this action present a disproportionate risk to children. The reason for this determination is that the proposed rule is based solely on technology performance.

The public is invited to submit comments or identify peer-reviewed studies and data that assess effects of early life exposure to the proposed rule.

H. Executive Order 13211: Actions Concerning Regulations That Significantly Affect Energy Supply, Distribution, or Use

Executive Order 13211, (66 FR 28355, May 22, 2001), provides that agencies shall prepare and submit to the Administrator of the Office of Information and Regulatory Affairs, OMB, a Statement of Energy Effects for certain actions identified as significant energy actions. Section 4(b) of Executive Order 13211 defines "significant energy actions" as "any action by an agency (normally published in the **Federal Register**) that promulgates or is expected to lead to the promulgation of a final rule or regulation, including notices of inquiry, advance notices of proposed rulemaking, and notices of proposed rulemaking: (1)(i) That is a significant regulatory action under Executive Order 12866 or any successor order, and (ii) is likely to have a significant adverse effect on the supply, distribution, or use of energy; or (2) that is designated by the Administrator of the Office of Information and Regulatory Affairs as a significant energy action." The proposed rule is not a "significant regulatory action" because it is not likely to have a significant adverse effect on the supply, distribution, or use of energy. The basis for the determination is as follows.

We estimate no significant changes for the energy sector for price, production, or imports. For more information on the estimated energy effects, please refer to the economic impact analysis for the proposed rule. The analysis is available in the public docket.

Therefore, we conclude that the proposed rule when implemented is not likely to have a significant adverse effect on the supply, distribution, or use of energy.

I. National Technology Transfer and Advancement Act

Section 12(d) of the National Technology Transfer and Advancement Act (NTTAA) of 1995 (Pub. L. 104–113, Section 12(d), 15 U.S.C. 272 note) directs EPA to use voluntary consensus standards (VCS) in its regulatory activities, unless to do so would be inconsistent with applicable law or otherwise impractical. The VCS are technical standards (*e.g.,* materials specifications, test methods, sampling procedures, and business practices) that are developed or adopted by VCS bodies. The NTTAA directs EPA to provide Congress, through OMB, explanations when the Agency does not use available and applicable VCS.

The proposed rule involves technical standards. The EPA cites the following standards in the proposed rule: EPA Methods 1, 2, 2F, 2G, 3A, 3B, 4, 5, 5D, 10, 10A, 10B, 17, 19, 29 of 40 CFR part 60; 101A of 40 CFR part 61; and voluntary consensus standards: American Society for Testing and Materials (ASTM) D6522–00, American Society of Mechanical Engineers (ASME) PTC 19 (manual methods only), ASTM D6784–02, ASTM D2234–D2234M–03, ASTM D6323–98, ASTM D2013–04, ASTM d5198–92, ASTM D5865–04, ASTM E711–87, ASTM D3173–03, ASTM E871–82, and ASTM D6722–01.

Consistent with the NTTAA, EPA conducted searches to identify voluntary consensus standards in addition to these EPA methods. No applicable voluntary consensus standards were identified for EPA Methods 2F, 2G, 5D, and 19. The search and review results are in the docket for this rule.

The search for emissions measurement procedures identified 16 other voluntary consensus standards. The EPA determined that these 16 standards identified for measuring emissions of the HAP or surrogates subject to emission standards in this rule were impractical alternatives to EPA test methods for the purposes of this rule. Therefore, EPA does not intend to adopt these standards for this purpose. The reasons for the determinations for the 16 methods can be found in the docket to this rule.

Table 4 to subpart JJJJJJ of this proposed rule lists the testing methods included in the regulation. Under section 3.7(f) and section 63.8(f) of Subpart A of the General Provisions, a source may apply to EPA for permission to use alternative test methods or alternative monitoring requirements in place of any required testing methods, performance specifications, or procedures.

EPA welcomes comments on this aspect of the proposed rulemaking and, specifically, invites the public to identify potentially-applicable voluntary consensus standards and to explain why such standards should be used in this regulation.

J. Executive Order 12898: Federal Actions to Address Environmental Justice in Minority Populations and Low-Income Populations

Executive Order 12898 (59 FR 7629, February 16, 1994) establishes Federal executive policy on environmental justice (EJ). Its main provision directs Federal agencies, to the greatest extent practicable and permitted by law, to

make EJ part of their mission by identifying and addressing, as appropriate, disproportionately high and adverse human health or environmental effects of their programs, policies, and activities on minority populations, low-income, and Tribal populations in the United States.

This proposed action establishes national emission standards for industrial, commercial, and institutional boilers that are area sources. The industrial boiler source category includes boilers used in manufacturing, processing, mining, refining, or any other industry. The commercial boiler source category includes boilers used in commercial establishments such as stores/malls, laundries, apartments, restaurants, theaters, and hotels/motels. The institutional boiler source category includes boilers used in medical centers (*e.g.,* hospitals, clinics, nursing homes), educational and religious facilities (*e.g.,* schools, universities, places of worship), and municipal buildings (*e.g.,* courthouses, arts centers, prisons). There are approximately 91,000 facilities affected by the proposed rule, most of which are small entities. By the defined nature of the category, many of these sources are located in close proximity to residential areas, commercial centers, and other locations where large numbers of people live and work.

Due to the large number of these sources, their nation-wide dispersal, and the absence of site specific coordinates, EPA is unable to examine the distributions of exposures and health risks attributable to these sources among different socio-demographic groups for this rule, or to relate the locations of expected emission reductions to the locations of current poor air quality. However, the rule is anticipated to have substantial emissions reductions of toxic air pollutants (*See* Table 2.), some of which are potential carcinogens, neurotoxins, and respiratory irritants. The rule will also result in substantial reductions in criteria pollutants such as CO, PM, SO_2, as well as ozone precursors.

Because of the close proximity of these source categories to people, the substantial emission reductions of air toxics resulting from the implementation of this proposed rule is anticipated to have health benefits for all persons living or going near these types of sources. (Please refer to the RIA for this rulemaking, which is available in the docket.) For example, there will be significant reductions of mercury emissions which will reduce potential exposures due to the atmospheric deposition of mercury for populations such as subsistence fisherman. In addition, there will be substantial reductions in other air toxics that can cause adverse health effects such as ozone precursors which contribute to "smog." This rule will not cause an increase in any adverse human health or environmental effects on any population, including any minority, low-income, or Tribal populations.

EPA defines "Environmental Justice" to include meaningful involvement of all people regardless of race, color, national origin, or income with respect to the development, implementation, and enforcement of environmental laws, regulations, and polices. To promote meaningful involvement, EPA has developed an EJ communication strategy to ensure that interested communities have access to this proposed rule, are aware of its content, and have an opportunity to comment. During the comment period, EPA will publicize the rulemaking via EJ newsletters, Tribal newsletters, EJ listserves, and the Internet, including Office of Policy, Economics, and Innovation's (OPEI) Rulemaking Gateway Web site (*http://yosemite.epa.gov/opei/rulegate.nsf/content/index.html?opendocument*). EPA will also provide general rulemaking fact sheets (*e.g.,* why is this important for my community) for EJ community groups and conduct conference calls with interested communities. In addition, State and Federal permitting requirements will provide State, local governments and communities the opportunity to provide their comments on the permit conditions associated with permitting these sources.

List of Subjects in 40 CFR Part 63

Environmental protection, Administrative practice and procedure, Air pollution control, Hazardous substances, Intergovernmental relations, Reporting and recordkeeping requirements.

Dated: April 29, 2010.

Lisa P. Jackson,

Administrator.

For the reasons stated in the preamble, title 40, chapter I, part 63 of the Code of Federal Regulations is proposed to be amended as follows:

PART 63—[AMENDED]

1. The authority citation for part 63 continues to read as follows:

Authority: 42 U.S.C. 7401 *et seq.*

Subpart A—[Amended]

2. Section 63.14 is amended by revising paragraphs (b)(27), (b)(39), (b)(47), (b)(49), (b)(50), (b)(52), (b)(55), (b)(56), (b)(58), (b)(61), (b)(62), and (i)(1) to read as follows:

63.14 Incorporation by reference.

* * * * *

(b) * * *

(27) ASTM D 6522–00, Standard Test Method for Determination of Nitrogen Oxides, Carbon Monoxide, and Oxygen Concentrations in Emissions from Natural Gas Fired Reciprocating Engines, Combustion Turbines, Boilers, and Process Heaters Using Portable Analyzers,[1] IBR approved for § 63.9307(c)(2), Table 4 to subpart ZZZZ, Table 5 to subpart DDDDD, and Table 4 to subpart JJJJJJ of this part.

* * * * *

(39) ASTM Method D388–99 $^{\varepsilon 1}$, Standard Classification of Coals by Rank[1], IBR approved for § 63.7575 and § 63.11237.

* * * * *

(47) ASTM D5198–92 (Reapproved 2003), Standard Practice for Nitric Acid Digestion of Solid Waste,[1] IBR approved for Table 6 to subpart DDDDD and Table 5 to subpart JJJJJJ of this part.

* * * * *

(49) ASTM D6323–98 (Reapproved 2003), Standard Guide for Laboratory Subsampling of Media Related to Waste Management Activities,[1] IBR approved for Table 6 to subpart DDDDD and Table 5 to subpart JJJJJJ of this part.

(50) ASTM E711–87 (Reapproved 1996), Standard Test Method for Gross Calorific Value of Refuse-Derived Fuel by the Bomb Calorimeter,[1] IBR approved for Table 6 to subpart DDDDD and Table 5 to subpart JJJJJJ of this part.

* * * * *

(52) ASTM E871–82 (Reapproved 1998), Standard Method of Moisture Analysis of Particulate Wood Fuels,[1] IBR approved for Table 6 to subpart DDDDD and Table 5 to subpart JJJJJJ of this part.

* * * * *

(55) ASTM D2013–04, Standard Practice for Preparing Coal Samples for Analysis, IBR approved for Table 6 to subpart DDDDD and Table 5 to subpart JJJJJJ of this part.

(56) ASTM D2234–D2234M–03 $^{\varepsilon 1}$, Standard Practice for Collection of a Gross Sample of Coal, IBR approved for Table 6 to subpart DDDDD and Table 5 to subpart JJJJJJ of this part.

* * * * *

(58) ASTM D3173–03, Standard Test Method for Moisture in the Analysis Sample of Coal and Coke, IBR approved

for Table 6 to subpart DDDDD and Table 5 to subpart JJJJJJ of this part.

(61) ASTM D6722–01, Standard Test Method for Total Mercury in Coal and Coal Combustion Residues by the Direct Combustion Analysis, IBR approved for Table 6 to subpart DDDDD and Table 5 to subpart JJJJJJ of this part.

(62) ASTM D5865–04, Standard Test Method for Gross Calorific Value of Coal and Coke, IBR approved for Table 6 to subpart DDDDD and Table 5 to subpart JJJJJJ of this part.

* * * * *

(i) * * *

(1) ANSI/ASME PTC 19.10–1981, "Flue and Exhaust Gas Analyses [Part 10, Instruments and Apparatus]," IBR approved for §§ 63.865(b), 63.3166(a), 63.3360(e)(1)(iii), 63.3545(a)(3), 63.3555(a)(3), 63.4166(a)(3), 63.4362(a)(3), 63.4766(a)(3), 63.4965(a)(3), 63.5160(d)(1)(iii), 63.9307(c)(2), 63.9323(a)(3), Table 5 to subpart DDDDD, and Table 4 to subpart JJJJJJ of this part.

* * * * *

3. Add subpart JJJJJJ to read as follows:

Subpart JJJJJJ—National Emission Standards for Hazardous Air Pollutants for Industrial, Commercial, and Institutional Boilers Area Sources

Sec.

What This Subpart Covers

63.11193 Am I subject to this subpart?
63.11194 What is the affected source of this subpart?
63.11195 Are any boilers not subject to this subpart?
63.11196 When do I have to comply with this subpart?

Emission Limits, Work Practice Standards, Emission Reduction Measures, and Management Practices

63.11200 What are the subcategories of boilers?
63.11201 What standards must I meet?

Initial Compliance Requirements

63.11205 What are my general requirements for complying with this subpart?
63.11210 What are my initial compliance requirements and by what date must I conduct them?
63.11211 How do I demonstrate initial compliance with the emission limits?
63.11212 What stack tests and procedures must I use for the performance tests?
63.11213 What fuel analyses and procedures must I use for the performance tests?
63.11214 When must I conduct subsequent performance tests?
63.11215 How do I demonstrate initial compliance with the work practice standard, emission reduction measures, and management practice?

Continuous Compliance Requirements

63.11220 How do I monitor and collect data to demonstrate continuous compliance?
63.11221 How do I demonstrate continuous compliance with the emission limits?
63.11222 How do I demonstrate continuous compliance with the work practice standards?
63.11223 What are my monitoring, installation, operation, and maintenance requirements?
63.11225 What are my notification, reporting, and recordkeeping requirements?

Other Requirements and Information

63.11235 What parts of the General Provisions apply to me?
63.11236 Who implements and enforces this subpart?
63.11237 What definitions apply to this subpart?
Table 1 to Subpart JJJJJJ of Part 63. Emission Limits
Table 2 to Subpart JJJJJJ of Part 63. Work Practice Standards
Table 3 to Subpart JJJJJJ of Part 63. Operating Limits for Boilers With Emission Limits
Table 4 to Subpart JJJJJJ of Part 63. Performance (Stack) Testing Requirements
Table 5 to Subpart JJJJJJ of Part 63. Fuel Analysis Requirements
Table 6 to Subpart JJJJJJ of Part 63. Applicability of General Provisions to Subpart JJJJJJ

Subpart JJJJJJ—National Emission Standards for Hazardous Air Pollutants for Industrial, Commercial, and Institutional Boilers Area Sources

What This Subpart Covers

§ 63.11193 Am I subject to this subpart?

You are subject to this subpart if you own or operate an industrial, commercial, or institutional boiler as defined in § 63.11237 that is located at, or is part of, an area source of hazardous air pollutants (HAP), as defined in § 63.2.

§ 63.11194 What is the affected source of this subpart?

(a) This subpart applies to each new or existing affected sources as defined in paragraphs (a)(1) and (2) of this section.

(1) The affected source is the collection of all existing industrial, commercial, and institutional boilers within a subcategory located at an area source.

(2) The affected source of this subpart is each new or reconstructed industrial, commercial, or institutional boiler located at an area source.

(b) An affected source is an existing source if you commenced construction or reconstruction of the affected source on or before June 4, 2010.

(c) An affected source is a new source if you commenced construction or reconstruction of the affected source after June 4, 2010.

(d) A boiler is a new affected source if you commenced fuel switching from natural gas to coal, biomass, or oil after June 4, 2010.

(e) Any source that was a major source and installed a control device on a boiler after November 15, 1990, and, as a result, became an area source under 40 CFR part 63 is required to obtain a permit under 40 CFR part 70 or 40 CFR part 71. Otherwise, you are exempt from the obligation to obtain a permit under 40 CFR part 70 or 40 CFR part 71, provided you are not otherwise required by law to obtain a permit under 40 CFR 70.3(a) or 40 CFR 71.3(a). Notwithstanding the previous sentence, you must continue to comply with the provisions of this subpart.

§ 63.11195 Are any boilers not subject to this subpart?

The types of boilers listed in paragraphs (a) through (e) of this section are not subject to this subpart.

(a) Any boiler specifically listed as an affected source in another standard(s) under this part.

(b) Any boiler specifically listed as an affected source in another standard(s) established under section 129 of the Clean Air Act (CAA).

(c) A boiler required to have a permit under section 3005 of the Solid Waste Disposal Act or covered by subpart EEE of this part (*e.g.,* hazardous waste boilers).

(d) A boiler that is used specifically for research and development. This does not include boilers that only provide steam to a process or for heating at a research and development facility.

(e) A gas-fired boiler as defined in this subpart.

§ 63.11196 What are my compliance dates?

(a) If you own or operate an existing affected source, you must achieve compliance with the applicable provisions in this subpart no later than [DATE 3 YEARS AFTER PUBLICATION OF THE FINAL RULE IN THE FEDERAL REGISTER].

(b) If you start up a new affected source on or before [DATE OF PUBLICATION OF THE FINAL RULE IN THE FEDERAL REGISTER], you must achieve compliance with the provisions of this subpart no later than [DATE OF PUBLICATION OF THE FINAL RULE IN THE FEDERAL REGISTER].

(c) If you start up a new affected source after [DATE OF PUBLICATION OF THE FINAL RULE IN THE FEDERAL REGISTER], you must achieve compliance with the provisions of this

subpart upon startup of your affected source.

Emission Limits, Work Practice Standards, Emission Reduction Measures, and Management Practices

§ 63.11200 What are the subcategories of boilers?

The subcategories of boilers are coal, biomass, and oil. Each subcategory is defined in § 63.11237.

§ 63.11201 What standards must I meet?

(a) You must comply with each emission limit specified in Table 1 of this subpart that applies to your boiler.

(b) You must comply with each work practice standard, emission reduction measure, and management practice specified in Table 2 of this subpart that applies to your boiler.

(c) These standards apply at all times.

Initial Compliance Requirements

§ 63.11205 What are my general requirements for complying with this subpart?

(a) At all times you must operate and maintain any affected source, including associated air pollution control equipment and monitoring equipment, in a manner consistent with safety and good air pollution control practices for minimizing emissions. The general duty to minimize emissions does not require you to make any further efforts to reduce emissions if levels required by this standard have been achieved. Determination of whether such operation and maintenance procedures are being used will be based on information available to the Administrator which may include, but is not limited to, monitoring results, review of operation and maintenance procedures, review of operation and maintenance records, and inspection of the source.

(b) You can demonstrate compliance with any applicable mercury emission limit using fuel analysis if the emission rate calculated according to § 63.11211(b) is less than the applicable emission limit. Otherwise, you must demonstrate compliance using stack testing.

§ 63.11210 What are my initial compliance requirements and by what date must I conduct them?

(a) You must demonstrate initial compliance with each emission limit specified in Table 1 of this subpart that applies to you by either conducting performance (stack) tests, as applicable, according to § 63.11212 and Table 4 of this subpart or conducting fuel analyses, as applicable, according to § 63.11213 and Table 5 to this subpart.

(b) For affected sources that have an applicable carbon monoxide (CO) emission limit, your initial compliance requirements depend on the rated capacity of your boiler. If your boiler has a heat input capacity between 10 and 100 million British thermal units (MMBtu) per hour, your initial compliance demonstration is conducting a performance test for CO according to Table 4 to this subpart. If your boiler has a heat input capacity of 100 MMBtu per hour or greater, your initial compliance demonstration is conducting a performance evaluation of your continuous emission monitoring system (CEMS) for CO according to § 63.11223.

(c) For existing affected sources that have applicable emission limits, you must demonstrate initial compliance no later than 180 days after the compliance date that is specified in § 63.11196 and according to the applicable provisions in § 63.7(a)(2).

(d) For existing affected sources that have applicable work practice standards or emission reduction measures, you must demonstrate initial compliance no later than the compliance date that is specified in § 63.11196 and according to the applicable provisions in § 63.7(a)(2).

(e) For new affected sources, you must demonstrate initial compliance no later than 180 calendar days after [INSERT THE DATE OF PUBLICATION OF THE FINAL RULE IN THE FEDERAL REGISTER] or within 180 calendar days after startup of the source, whichever is later, according to § 63.7(a)(2)(ix).

§ 63.11211 How do I demonstrate initial compliance with the emission limits?

(a) For affected sources that elect to demonstrate compliance with any of the emission limits of this subpart through performance (stack) testing, your initial compliance requirements include conducting performance tests according to § 63.11212 and Table 4 to this subpart and conducting CMS performance evaluations according to § 63.11223.

(b) If you elect to demonstrate compliance with an applicable mercury emission limit through fuel analysis, you must conduct fuel analyses according to § 63.11213 and follow the procedures in paragraphs (b)(1) through (3) of this section.

(1) If you burn more than one fuel type, you must determine the fuel mixture you could burn in your boiler that would result in the maximum emission rates of mercury that you elect to demonstrate compliance through fuel analysis.

(2) You must determine the 90th percentile confidence level fuel mercury concentration of the composite samples analyzed for each fuel type using Equation 1 of this section.

$$P_{90} = \text{mean} + (SD * t) \qquad \text{(Eq. 1)}$$

Where:

P_{90} = 90th percentile confidence level mercury concentration, in pounds per million Btu;

mean = Arithmetic average of the fuel mercury concentration in the fuel samples analyzed according to § 63.11213, in units of pounds per million Btu;

SD = Standard deviation of the mercury concentration in the fuel samples analyzed according to § 63.11213, in units of pounds per million Btu;

t = t distribution critical value for 90th percentile (0.1) probability for the appropriate degrees of freedom (number of samples minus one) as obtained from a Distribution Critical Value Table.

(3) To demonstrate compliance with the applicable mercury emission limit, the emission rate that you calculate for your boiler using Equation 1 of this section must be less than the applicable mercury emission limit.

§ 63.11212 What stack tests and procedures must I use for the performance tests?

(a) You must conduct all performance tests according to the requirements in § 63.7.

(b) You must conduct each stack test according to the requirements in Table 4 to this subpart.

(c) You must conduct stack tests at the maximum normal operating load while burning the type of fuel or mixture of fuels that have the highest content of mercury, and you must demonstrate initial compliance based on these tests.

(d) You must conduct a minimum of three separate test runs for each performance test required in this section, as specified in § 63.7(e)(3). The sampling time for each test run must last at least 1 hour except that the sampling time for the test runs conducted for mercury emissions must last at least 2 hours.

(e) To determine compliance with the emission limits, you must use the F–Factor methodology and equations in sections 12.2 and 12.3 of EPA Method 19 of appendix A to part 60 of this chapter to convert the measured particulate matter concentrations and the measured mercury concentrations that result from the initial performance test to pounds per million Btu heat input emission rates.

§ 63.11213 What fuel analyses and procedures must I use for the performance tests?

(a) You must conduct fuel analyses according to the procedures in

paragraphs (b) and (c) of this section and Table 5 to this subpart, as applicable.

(b) At a minimum, you must obtain three composite fuel samples for each fuel type according to the procedures in Table 5 of this subpart. Each composite sample will consist of a minimum of three samples collected at approximately equal intervals during a test run period.

(c) Determine the concentration of mercury in the fuel in units of pounds per million Btu of each composite sample for each fuel type according to the procedures in Table 5 to this subpart.

§ 63.11214 When must I conduct subsequent performance tests?

(a) You must conduct all applicable performance (stack) tests according to § 63.11212 on an annual basis, unless you follow the requirements listed in paragraphs (b) through (d) of this section. Annual performance tests must be completed between 10 and 12 months after the previous performance test, unless you follow the requirements listed in paragraphs (b) through (d) of this section.

(b) You can conduct performance stack tests less often for particulate matter or mercury if your performance stack tests for the pollutant for at least 3 consecutive years show that your emissions are at or below 75 percent of the emission limit, and if there are no changes in the operation of the affected source or air pollution control equipment that could increase emissions. In this case, you do not have to conduct a performance test for that pollutant for the next 2 years. You must conduct a performance test during the third year and no more than 36 months after the previous performance test.

(c) If your boiler continues to meet the emission limit for particulate matter or mercury, you may choose to conduct performance stack tests for the pollutant every third year if your emissions are at or below 75 percent of the emission limit, and if there are no changes in the operation of the affected source or air pollution control equipment that could increase emissions, but each such performance test must be conducted no more than 36 months after the previous performance test.

(d) If a performance test shows emissions exceeded 75 percent of the emission limit, you must conduct annual performance tests for that pollutant until all performance tests over consecutive 3-year period show compliance.

(e) If you have an applicable CO emission limit and your boiler has a heat input capacity between 10 and 100 MMBtu per hour, you must conduct annual performance tests for CO according to § 63.11211. Each annual performance test must be conducted between 10 and 12 months after the previous performance test.

(f) If you demonstrate compliance with the mercury based on fuel analysis, you must conduct a fuel analysis according to § 63.11213 for each type of fuel burned monthly. If you plan to burn a new type of fuel or fuel mixture, you must conduct a fuel analysis before burning the new type of fuel or mixture in your boiler. You must recalculate the mercury emission rate using Equation 1 of § 63.11211. The recalculated mercury emission rate must be less than the applicable emission limit.

§ 63.11215 How do I demonstrate initial compliance with the work practice standard, emission reduction measures, and management practice?

(a) If you own or operate an existing boiler with a heat input capacity of less than 10 million Btu per hour, you must submit a signed statement in the Notification of Compliance Status report that indicates that you conducted a tune-up of the boiler.

(b) If you own or operate an existing affected boiler with a heat input capacity of 10 million Btu per hour or greater, you must submit the energy assessment report, along with a signed certification that the assessment is an accurate depiction of your facility.

Continuous Compliance Requirements

§ 63.11220 How do I monitor and collect data to demonstrate continuous compliance?

(a) You must monitor and collect data according to this section and the site-specific monitoring plan required by § 63.11223.

(b) Except for monitor malfunctions, associated repairs, and required quality assurance or control activities (including, as applicable, calibration checks and required zero and span adjustments), you must monitor continuously (or collect data at all required intervals) at all times that the affected source is operating.

(c) You may not use data recorded during monitoring malfunctions, associated repairs, or required quality assurance or control activities in data averages and calculations used to report emission or operating levels. You must use all the data collected during all other periods in assessing the operation of the control device and associated control system.

§ 63.11221 How do I demonstrate continuous compliance with the emission limits?

(a) You must demonstrate continuous compliance with each emission limit and operating limit in Tables 1 and 3 to this subpart that applies to you according to paragraphs (a)(1) through (5) of this section.

(1) Following the date on which the initial performance test is completed or is required to be completed under §§ 63.7 and 63.11196, whichever date comes first, you must not operate above any of the applicable maximum operating limits or below any of the applicable minimum operating limits listed in Table 3 to this subpart at all times. Operation above the established maximum or below the established minimum operating limits shall constitute a deviation of established operating limits. Operating limits are confirmed or reestablished during performance tests.

(2) If you have an applicable mercury emission limit, you must keep records of the type and amount of all fuels burned in each boiler during the reporting period to demonstrate that all fuel types and mixtures of fuels burned would result in lower emissions of mercury than the applicable emission limit.

(3) If you have you have an applicable mercury emission limit and you plan to burn a new type of fuel, you must determine the mercury concentration for any new fuel type in units of pounds per million Btu, based on supplier data or your own fuel analysis and meet the requirements in paragraphs (a)(3)(i) or (ii) of this section.

(i) The recalculated mercury emission rate must be less than the applicable emission limit.

(ii) If the results are higher than mercury fuel input during the previous performance test, then you must conduct a new performance test within 60 days of burning the new fuel type or fuel mixture according to the procedures in § 63.11212 to demonstrate that the mercury emissions do not exceed the emission limit.

(4) If your unit is controlled with a fabric filter, and you demonstrate continuous compliance using a bag leak detection system, you must initiate corrective action within 1 hour of a bag leak detection system alarm and operate and maintain the fabric filter system such that the alarm does not sound more than 5 percent of the operating time during a 6-month period. You must also keep records of the date, time, and duration of each alarm, the time corrective action was initiated and completed, and a brief description of the

cause of the alarm and the corrective action taken. You must also record the percent of the operating time during each 6-month period that the alarm sounds. In calculating this operating time percentage, if inspection of the fabric filter demonstrates that no corrective action is required, no alarm time is counted. If corrective action is required, each alarm shall be counted as a minimum of 1 hour. If you take longer than 1 hour to initiate corrective action, the alarm time shall be counted as the actual amount of time taken to initiate corrective action.

(5) If you have an applicable CO emission limit and you are required to install a CEMS according to § 63.11223, then you must continuously monitor CO according to §§ 63.11223(a) and 63.11220 and maintain a CO emission level below your applicable CO emission limit in Table 1 to this subpart at all times.

(b) You must report each instance in which you did not meet each emission limit and operating limit in Tables 1 and 3 to this subpart that apply to you. These instances are deviations from the emission limits in this subpart. These deviations must be reported according to the requirements in § 63.11224.

§ 63.11222 How do I demonstrate continuous compliance with the work practice and management practice standards?

(a) For affected sources subject to the work practice standard or the management practices, you must keep records as required in § 63.11224(c) to demonstrate continuous compliance.

(b) You must conduct a tune-up of the boiler biennially to demonstrate continuous compliance as specified in paragraphs (b)(1) through (6) of this section.

(1) Inspect the burner, and clean or replace any components of the burner as necessary;

(2) Inspect the flame pattern and make any adjustments to the burner necessary to optimize the flame pattern consistent with the manufacturer's specifications;

(3) Inspect the system controlling the air-to-fuel ratio, and ensure that it is correctly calibrated and functioning properly;

(4) Minimize total emissions of CO consistent with the manufacturer's specifications;

(5) Measure the concentration in the effluent stream of CO in parts per million, by volume, dry basis (ppmvd), before and after the adjustments are made; and

(6) Maintain on-site and submit, if requested by the Administrator, an annual report containing the information in paragraphs (b)(6)(i) through (iii) of this section,

(i) The concentrations of CO in the effluent stream in ppmvd, and oxygen in percent dry basis, measured before and after the adjustments of the boiler;

(ii) A description of any corrective actions taken as a part of the combustion adjustment; and

(iii) The type and amount of fuel used over the 12 months prior to the annual adjustment.

§ 63.11223 What are my monitoring, installation, operation, and maintenance requirements?

(a) If you are using a control device to comply with the emission limits specified in Table 1 of this subpart, you must maintain each operating limit in Table 3 of this subpart that applies to your boiler. If you use a control device not covered in Table 3, or you wish to establish and monitor an alternative operating limit and alternative monitoring parameters, you must apply to the United States Environmental Protection Agency (EPA) Administrator for approval of alternative monitoring under § 63.8(f).

(b) If you demonstrate compliance with any applicable emission limit through stack testing, you must develop a site-specific monitoring plan according to the requirements in paragraphs (b)(1) through (4) of this section. This requirement also applies to you if you petition the EPA Administrator for alternative monitoring parameters under § 63.8(f).

(1) For each continuous monitoring system (CMS) required in this section, you must develop, and submit to the EPA Administrator for approval upon request, a site-specific monitoring plan that addresses paragraphs (b)(1)(i) through (iii) of this section. You must submit this site-specific monitoring plan (if requested) at least 60 days before your initial performance evaluation of your CMS.

(i) Installation of the CMS sampling probe or other interface at a measurement location relative to each affected unit such that the measurement is representative of control of the exhaust emissions (*e.g.*, on or downstream of the last control device);

(ii) Performance and equipment specifications for the sample interface, the pollutant concentration or parametric signal analyzer, and the data collection and reduction systems; and

(iii) Performance evaluation procedures and acceptance criteria (*e.g.*, calibrations).

(2) In your site-specific monitoring plan, you must also address paragraphs (b)(2)(i) through (iii) of this section.

(i) Ongoing operation and maintenance procedures in accordance with the general requirements of § 63.8(c)(1), (3), and (4)(ii);

(ii) Ongoing data quality assurance procedures in accordance with the general requirements of § 63.8(d); and

(iii) Ongoing recordkeeping and reporting procedures in accordance with the general requirements of § 63.10(c), (e)(1), and (e)(2)(i).

(3) You must conduct a performance evaluation of each CMS in accordance with your site-specific monitoring plan.

(4) You must operate and maintain the CMS in continuous operation according to the site-specific monitoring plan.

(c) If you have an operating limit that requires the use of a CMS, you must install, operate, and maintain each continuous parameter monitoring system (CPMS) according to the procedures in paragraphs (c)(1) through (5) of this section.

(1) The CPMS must complete a minimum of one cycle of operation for each successive 15-minute period. You must have a minimum of four successive cycles of operation to have a valid hour of data.

(2) Except for monitoring malfunctions, associated repairs, and required quality assurance or control activities (including, as applicable, calibration checks and required zero and span adjustments), you must conduct all monitoring in continuous operation at all times that the unit is operating. A monitoring malfunction is any sudden, infrequent, not reasonably preventable failure of the monitoring to provide valid data. Monitoring failures that are caused in part by poor maintenance or careless operation are not malfunctions.

(3) For purposes of calculating data averages, you must not use data recorded during monitoring malfunctions, associated repairs, out of control periods, or required quality assurance or control activities. You must use all the data collected during all other periods in assessing compliance. Any period for which the monitoring system is out-of-control and data are not available for required calculations constitutes a deviation from the monitoring requirements.

(4) Determine the 3-hour block average of all recorded readings, except as provided in paragraph (c)(3) of this section.

(5) Record the results of each inspection, calibration, and validation check.

(d) If you have an applicable opacity operating limit, you must install, operate, certify and maintain each

continuous opacity monitoring system (COMS) according to the procedures in paragraphs (d)(1) through (7) of this section by the compliance date specified in § 63.11196.

(1) Each COMS must be installed, operated, and maintained according to PS 1 of 40 CFR part 60, appendix B.

(2) You must conduct a performance evaluation of each COMS according to the requirements in § 63.8 and according to PS 1 of 40 CFR part 60, appendix B.

(3) As specified in § 63.8(c)(4)(i), each COMS must complete a minimum of one cycle of sampling and analyzing for each successive 10-second period and one cycle of data recording for each successive 6-minute period.

(4) The COMS data must be reduced as specified in § 63.8(g)(2).

(5) You must include in your site-specific monitoring plan procedures and acceptance criteria for operating and maintaining each COMS according to the requirements in § 63.8(d). At a minimum, the monitoring plan must include a daily calibration drift assessment, a quarterly performance audit, and an annual zero alignment audit of each COMS.

(6) You must operate and maintain each COMS according to the requirements in the monitoring plan and the requirements of § 63.8(e). Identify periods the COMS is out of control including any periods that the COMS fails to pass a daily calibration drift assessment, a quarterly performance audit, or an annual zero alignment audit.

(7) You must determine and record all the 1-hour block averages collected for periods during which the COMS is not out of control.

(e) If you have an applicable CO emission limit and your boiler has a heat input capacity of 100 MMBtu per hour or greater, you must install, operate, and maintain a CEMS for CO and oxygen according to the procedures in paragraphs (e)(1) through (6) of this section by the compliance date specified in § 63.11196. The CO and oxygen shall be monitored at the same location at the outlet of the boiler.

(1) Each CEMS must be installed, operated, and maintained according to Performance Specification (PS) 4A of 40 CFR part 60, appendix B, and according to the site-specific monitoring plan developed according to § 63.11223.

(2) You must conduct a performance evaluation of each CEMS according to the requirements in § 63.8 and according to PS 4A of 40 CFR part 60, appendix B.

(3) Each CEMS must complete a minimum of one cycle of operation (sampling, analyzing, and data recording) for each successive 15-minute period.

(4) The CEMS data must be reduced as specified in § 63.8(g)(2).

(5) You must calculate and record all daily averages. A new daily average emission rate is calculated as the average of all of the hourly CO emission data for the calendar day.

(6) For purposes of calculating data averages, you must not use data recorded during periods of monitoring malfunctions, associated repairs, out-of-control periods, required quality assurance or control activities, or when your boiler is operating at less than 50 percent of its rated capacity. You must use all the data collected during all other periods in assessing compliance. Any period for which the monitoring system is out of control and data are not available for required calculations constitutes a deviation from the monitoring requirements.

(f) You must include in your site-specific monitoring plan procedures and acceptance criteria for operating and maintaining each CEMS according to the requirements in § 63.8(d).

§ 63.11224 What are my notification, reporting, and recordkeeping, requirements?

(a) You must submit the notifications specified in paragraphs (a)(1) through (a)(4) of this section.

(1) You must submit all of the notifications in §§ 63.5(b), 63.7(b): 63.8(e) and (f); 63.9(b) through (e); and 63.9(g) and (h) that apply to you by the dates specified in those sections.

(2) As specified in § 63.9(b)(2), you must submit the Initial Notification no later than 120 calendar days after [INSERT THE DATE OF PUBLICATION OF THE FINAL RULE IN THE FEDERAL REGISTER] or within 120 days after the source becomes subject to the standard.

(3) You must submit the Notification of Compliance Status in accordance with § 63.9(h) no later than 120 days after the applicable compliance date specified in § 63.11196 unless you must conduct a performance test. If you must conduct a performance test, you must submit the Notification of Compliance Status within 60 days of completing the performance test. In addition to the information required in § 63.9(h)(2), your notification must include the following certification(s) of compliance, as applicable, and signed by a responsible official:

(i) "This facility complies with the requirements in § 63.11222(b) to conduct a biennial tune-up of the boiler".

(ii) "This facility has had an energy assessment performed according to § 63.11215."

(iii) This certification of compliance by the owner or operator that installs bag leak detection systems: "This facility has prepared a bag leak detection system monitoring plan in accordance with § 63.11221 and will operate each bag leak detection system according to the plan."

(4) If you are using data from a previously conducted emission test to serve as documentation of conformance with the emission standards and operating limits of this subpart consistent with § 63.7(e)(2)(iv), you must submit the test data in lieu of the initial performance test results with the Notification of Compliance Status required under paragraph (a)(3) of this section.

(b) You must prepare, by March 1 of each year, an annual compliance certification report for the previous calendar year containing the information specified in paragraphs (b)(1) through (b)(3) of this section. You must submit the report by March 15 if you had any instance described by paragraph (b)(3) of this section.

(1) Company name and address.

(2) Statement by a responsible official, with the official's name, title, phone number, e-mail address, and signature, certifying the truth, accuracy and completeness of the notification and a statement of whether the source has complied with all the relevant standards and other requirements of this subpart.

(3) If the source is not in compliance, include a description of deviations from the applicable requirements, the time periods during which the deviations occurred, and the corrective actions taken.

(4) The total fuel use by each affected source subject to an emission limit, for each calendar month within the reporting period, including, but not limited to, a description of the fuel, including whether the fuel has received a non-waste determination by you or EPA, and the total fuel usage amount with units of measure.

(c) You must maintain the records specified in paragraphs (c)(1) through (5) of this section.

(1) As required in § 63.10(b)(2)(xiv), you must keep a copy of each notification and report that you submitted to comply with this subpart and all documentation supporting any Initial Notification or Notification of Compliance Status that you submitted.

(2) You must keep records to document conformance with the work practices, emission reduction measures, and management practices required by

§ 63.11215 as specified in paragraphs (c)(2)(i) through (iv) of this section.

(i) Records must identify each boiler, the date of tune-up, the procedures followed for tune-up, and the manufacturer's specifications to which the boiler was tuned.

(ii) Records documenting monthly fuel use by each boiler, including the type(s) of fuel, including, but not limited to, a description of the fuel, including whether the fuel has received a non-waste determination by you or EPA, and the total fuel usage amount with units of measure.

(3) For sources that demonstrate compliance through fuel analysis, a copy of all calculations and supporting documentation that were done to demonstrate compliance with the mercury emission limits. Supporting documentation should include results of any fuel analyses. You can use the results from one fuel analysis for multiple boilers provided they are all burning the same fuel type.

(4) You must keep the records of all inspection and monitoring data required by §§ 63.11221 and 63.11222, and the information identified in paragraphs (c)(4)(i) through (vi) of this section for each required inspection or monitoring.

(i) The date, place, and time of the monitoring event;

(ii) Person conducting the monitoring;

(iii) Technique or method used;

(iv) Operating conditions during the activity;

(v) Results, including the date, time, and duration of the period from the time the monitoring indicated a problem to the time that monitoring indicated proper operation; and

(vi) Maintenance or corrective action taken (if applicable).

(5) If you use a bag leak detection system, you must keep the records specified in paragraphs (c)(5)(i) through (iii) of this section.

(i) Records of the bag leak detection system output.

(ii) Records of bag leak detection system adjustments, including the date and time of the adjustment, the initial bag leak detection system settings, and the final bag leak detection system settings.

(iii) The date and time of all bag leak detection system alarms, and for each valid alarm, the time you initiated corrective action, the corrective action taken, and the date on which corrective action was completed.

(d) Your records must be in a form suitable and readily available for expeditious review, according to § 63.10(b)(1). As specified in § 63.10(b)(1), you must keep each record for 5 years following the date of each recorded action. You must keep each record onsite for at least 2 years after the date of each recorded action according to § 63.10(b)(1). You may keep the records offsite for the remaining 3 years.

(e) For affected facilities having applicable emission limits, you must submit an electronic copy of stack test reports to EPA's WebFIRE data base, the owner or operator of an affected facility shall enter the test data into EPA's data base using the Electronic Reporting Tool located at *http://www.epa.gov/ttn/chief/ert/ert_tool.html.*

Other Requirements and Information

§ 63.11235 What parts of the General Provisions apply to me?

Table 6 to this subpart shows which parts of the General Provisions in §§ 63.1 through 63.15 apply to you.

§ 63.11236 Who implements and enforces this subpart?

(a) This subpart can be implemented and enforced by EPA or a delegated authority such as your State, local, or tribal agency. If the EPA Administrator has delegated authority to your State, local, or tribal agency, then that agency has the authority to implement and enforce this subpart. You should contact your EPA Regional Office to find out if implementation and enforcement of this subpart is delegated to your State, local, or tribal agency.

(b) In delegating implementation and enforcement authority of this subpart to a State, local, or tribal agency under 40 CFR part 63, subpart E, the authorities contained in paragraphs (c) of this section are retained by the EPA Administrator and are not transferred to the State, local, or tribal agency.

(c) The authorities that cannot be delegated to State, local, or tribal agencies are specified in paragraphs (c)(1) through (5) of this section.

(1) Approval of an alternative non-opacity emission standard and work practice standards in § 63.11223(a).

(2) Approval of alternative opacity emission standard under § 63.6(h)(9).

(3) Approval of major change to test methods under § 63.7(e)(2)(ii) and (f). A "major change to test method" is defined in § 63.90.

(4) Approval of a major change to monitoring under § 63.8(f). A "major change to monitoring" is defined in § 63.90.

(5) Approval of major change to recordkeeping and reporting under § 63.10(f). A "major change to recordkeeping/reporting" is defined in § 63.90.

§ 63.11237 What definitions apply to this subpart?

Terms used in this subpart are defined in the CAA, in § 63.2 (the General Provisions), and in this section as follows:

Bag leak detection system means an instrument that is capable of monitoring particulate matter loadings in the exhaust of a fabric filter (*i.e.,* baghouse) in order to detect bag failures. A bag leak detection system includes, but is not limited to, an instrument that operates on electrodynamic, triboelectric, light scattering, light transmittance, or other principle to monitor relative particulate matter loadings.

Biomass means but is not limited to, wood residue, and wood products (*e.g.,* trees, tree stumps, tree limbs, bark, lumber, sawdust, sanderdust, chips, scraps, slabs, millings, and shavings); animal manure, including litter and other bedding materials; vegetative agricultural and silvicultural materials, such as logging residues (slash), nut and grain hulls and chaff (*e.g.,* almond, walnut, peanut, rice, and wheat), bagasse, orchard prunings, corn stalks, coffee bean hulls and grounds. This definition of biomass fuel is not intended to suggest that these materials are or not solid waste.

Biomass subcategory includes any boiler that burns any amount of biomass, but no coal, either alone or in combination with liquid fuels or gaseous fuels.

Boiler means an enclosed combustion device in which water is heated to recover thermal energy in the form of steam or hot water. A device combusting solid waste, as defined in 40 CFR 241.3, is not a boiler. Waste heat boilers are excluded from this definition.

Boiler system means the boiler and associated components, such as, the feedwater system, the combustion air system, the fuel system (including burners), blowdown system, combustion control system, and the energy consuming systems.

Coal means all solid fuels classifiable as anthracite, bituminous, sub-bituminous, or lignite by the American Society for Testing and Materials in ASTM D388–99e1, "Standard Specification for Classification of Coals by Rank[1]" (incorporated by reference, see § 63.14(b)) and synthetic fuels derived from coal including but not limited to, solvent-refined coal, coal-oil mixtures, and coal-water mixtures. Coal derived gases are excluded from this definition.

Coal subcategory includes any boiler that burns any coal alone or at least 10

percent coal on an annual heat input basis in combination with biomass, liquid fuels, or gaseous fuels.

Commercial boiler means a boiler used in commercial establishments such as hotels, restaurants, and laundries to provide electricity, steam, and/or hot water that does not combust solid waste, as that term is defined by the Administrator under RCRA.

Deviation means any instance in which an affected source subject to this subpart, or an owner or operator of such a source:

(1) Fails to meet any requirement or obligation established by this subpart including, but not limited to, any emission limit, operating limit, or work practice standard;

(2) Fails to meet any term or condition that is adopted to implement an applicable requirement in this subpart and that is included in the operating permit for any affected source required to obtain such a permit; or

(3) A deviation is not always a violation. The determination of whether a deviation constitutes a violation of the standard is up to the discretion of the entity responsible for enforcement of the standards.

Dry scrubber means an add-on air pollution control system that injects dry alkaline sorbent (dry injection) or sprays an alkaline sorbent (spray dryer) to react with and neutralize acid gas in the exhaust stream forming a dry powder material. Sorbent injection systems in fluidized bed boilers are included in this definition.

Electrostatic precipitator means an add-on air pollution control device used to capture particulate matter by charging the particles using an electrostatic field, collecting the particles using a grounded collecting surface, and transporting the particles into a hopper.

Energy assessment means an in-depth assessment of a facility to identify immediate and long-term opportunities to save energy, focusing on the steam and process heating systems which involves a thorough examination of potential savings from energy efficiency improvements, waste minimization and pollution prevention, and productivity improvement.

Equivalent means the following only as this term is used in Table 5 to this subpart:

(1) An equivalent sample collection procedure means a published voluntary consensus standard or practice (VCS) or EPA method that includes collection of a minimum of three composite fuel samples, with each composite consisting of a minimum of three increments collected at approximately equal intervals over the test period.

(2) An equivalent sample compositing procedure means a published VCS or EPA method to systematically mix and obtain a representative subsample (part) of the composite sample.

(3) An equivalent sample preparation procedure means a published VCS or EPA method that: Clearly states that the standard, practice or method is appropriate for the pollutant and the fuel matrix; or is cited as an appropriate sample preparation standard, practice or method for the pollutant in the chosen VCS or EPA determinative or analytical method.

(4) An equivalent procedure for determining heat content means a published VCS or EPA method to obtain gross calorific (or higher heating) value.

(5) An equivalent procedure for determining fuel moisture content means a published VCS or EPA method to obtain moisture content. If the sample analysis plan calls for determining mercury using an aliquot of the dried sample, then the drying temperature must be modified to prevent vaporizing this metal. On the other hand, if metals analysis is done on an "as received" basis, a separate aliquot can be dried to determine moisture content and the mercury concentration mathematically adjusted to a dry basis.

(6) An equivalent mercury determinative or analytical procedure means a published VCS or EPA method that clearly states that the standard, practice, or method is appropriate for mercury and the fuel matrix and has a published detection limit equal or lower than the methods listed in Table 5 to this subpart for the same purpose.

Fabric filter means an add-on air pollution control device used to capture particulate matter by filtering gas streams through filter media, also known as a baghouse.

Federally enforceable means all limitations and conditions that are enforceable by the EPA Administrator, including the requirements of 40 CFR part 60 and 40 CFR part 61, requirements within any applicable State implementation plan, and any permit requirements established under 40 CFR 52.21 or under 40 CFR 51.18 and 40 CFR 51.24.

Fuel type means each category of fuels that share a common name or classification. Examples include, but are not limited to, bituminous coal, subbituminous coal, lignite, anthracite, biomass, distillate oil, residual oil.

Gaseous fuels includes, but is not limited to, natural gas, process gas, landfill gas, coal derived gas, refinery gas, and biogas.

Gas-fired boiler includes any boiler that burns gaseous fuels not combined with any solid fuels, burns liquid fuel only during periods of gas curtailment, gas supply emergencies, or periodic testing on liquid fuel. Periodic testing of liquid fuel shall not exceed a combined total of 48 hours during any calendar year.

Heat input means heat derived from combustion of fuel in a boiler and does not include the heat input from preheated combustion air, recirculated flue gases, or exhaust gases from other sources such as gas turbines, internal combustion engines, kilns, etc.

Industrial boiler means a boiler used in manufacturing, processing, mining, and refining or any other industry to provide steam, hot water, and/or electricity that does not combust solid waste, as that term is defined by the Administrator under RCRA.

Institutional boiler means a boiler used in institutional establishments such as medical centers, research centers, and institutions of higher education to provide electricity, steam, and/or hot water that does not combust solid waste, as that term is defined by the Administrator under RCRA.

Liquid fuel means petroleum, distillate oil, residual oil, any form of liquid fuel derived from petroleum, on-spec used oil, and biodiesel.

Minimum sorbent flow rate means 90 percent of the test average sorbent (or activated carbon) flow rate measured according to Table 6 to this subpart during the most recent performance test demonstrating compliance with the applicable emission limits.

Natural gas means:

(1) A naturally occurring mixture of hydrocarbon and nonhydrocarbon gases found in geologic formations beneath the earth's surface, of which the principal constituent is methane; or

(2) Liquid petroleum gas, as defined by the American Society for Testing and Materials in ASTM D1835–03a, "Standard Specification for Liquid Petroleum Gases" (incorporated by reference, see § 63.14(b)).

Oil subcategory includes any boiler that does not burn any solid fuel and burns any liquid fuel either alone or in combination with gaseous fuels. Gas boilers that burn liquid fuel during periods of gas curtailment, gas supply emergencies, or for periodic testing of liquid fuel are not included in this definition.

Opacity means the degree to which emissions reduce the transmission of light and obscure the view of an object in the background.

Particulate matter means any finely divided solid or liquid material, other than uncombined water, as measured by the test methods specified under this subpart, or an alternative method.

Performance testing means the collection of data resulting from the execution of a test method used (either by stack testing or fuel analysis) to demonstrate compliance with a relevant emission standard.

Period of natural gas curtailment or supply interruption means a period of time during which the supply of natural gas to an affected facility is halted for reasons beyond the control of the facility. An increase in the cost or unit price of natural gas does not constitute a period of natural gas curtailment or supply interruption.

Qualified personnel mean specialists in evaluating energy systems, such as, those who have successfully completed the DOE Qualified Specialist program for all systems, Certified Energy Managers certified by the Association of Energy Engineers, or the equivalent.

Responsible official means responsible official as defined in 40 CFR 70.2.

Tune-up means adjustments made to a boiler in accordance with procedures supplied by the manufacturer (or an approved specialist) to optimize the combustion efficiency.

Waste heat boiler means a device that recovers normally unused energy and converts it to usable heat. Waste heat boilers incorporating duct or supplemental burners that are designed to supply 50 percent or more of the total rated heat input capacity of the waste heat boiler are not considered waste heat boilers, but are considered boilers. Waste heat boilers are also referred to as heat recovery steam generators.

Work practice standard means any design, equipment, work practice, or operational standard, or combination thereof, that is promulgated pursuant to section 112(h) of the CAA.

As stated in § 63.11201, you must comply with the following applicable emission limits:

TABLE 1 TO SUBPART JJJJJJ OF PART 63—EMISSION LIMITS

If your boiler is in this subcategory . . .	For the following pollutants . . .	You must meet the following emission limits . . .
1. New coal	a. Particulate Matter	0.03 lb per MMBtu of heat input.
	b. Mercury	0.000003 lb per MMBtu of heat input.
	c. Carbon Monoxide	310 ppm by volume on a dry basis corrected to 7 percent oxygen (daily average).
2. New biomass	a. Particulate Matter	0.03 lb per MMBtu of heat input.
	b. Carbon Monoxide	100 ppm by volume on a dry basis corrected to 7 percent oxygen (daily average).
3. New oil	a. Particulate Matter	0.03 lb per MMBtu of heat input.
	b. Carbon Monoxide	1 ppm by volume on a dry basis corrected to 3 percent oxygen (daily average).
4. Existing coal (units with heat input capacity of 10 million Btu per hour or greater).	a. Mercury	0.000003 lb per MMBtu of heat input.
	b. Carbon Monoxide	310 ppm by volume on a dry basis corrected to 7 percent oxygen (daily average).
5. Existing biomass (units with heat input capacity of 10 million Btu per hour or greater).	Carbon Monoxide	160 ppm by volume on a dry basis corrected to 7 percent oxygen (daily average).
6. Existing oil (units with heat input capacity of 10 million Btu per hour or greater).	Carbon Monoxide	2 ppm by volume on a dry basis corrected to 3 percent oxygen (daily average).

As stated in §§ 63.11202 and 63.11203, you must comply with the following applicable work practice standards:

TABLE 2 TO SUBPART JJJJJJ OF PART 63—WORK PRACTICE STANDARDS, EMISSION REDUCTION MEASURES, AND MANAGEMENT PRACTICES

If your boiler is in this subcategory . . .	You must meet the following . . .
1. Existing coal, biomass, or oil (units with heat input capacity of less than 10 million Btu per hour).	a. Conduct a tune-up of the boiler biennially as specified in § 63.11222.
2. Existing coal, biomass, or oil (units with heat input capacity of 10 million Btu per hour and greater).	Must have an energy assessment performed by qualified personnel which includes: (1) a visual inspection of the boiler system. (2) establish operating characteristics of the facility, energy system specifications, operating and maintenance procedures, and unusual operating constraints, (3) identify major energy consuming systems, (4) a review of available architectural and engineering plans, facility operation and maintenance procedures and logs, and fuel usage, (5) a list of major energy conservation measures, (6) the energy savings potential of the energy conservation measures identified,

TABLE 2 TO SUBPART JJJJJJ OF PART 63—WORK PRACTICE STANDARDS, EMISSION REDUCTION MEASURES, AND MANAGEMENT PRACTICES—Continued

If your boiler is in this subcategory . . .	You must meet the following . . .
	(7) a comprehensive report detailing the ways to improve efficiency, the cost of specific improvements, benefits, and the time frame for recouping those investments.

As stated in § 63.11201, you must comply with the applicable operating limits:

TABLE 3 TO SUBPART JJJJJJ OF PART 63—OPERATING LIMITS FOR BOILERS WITH MERCURY EMISSION LIMITS

If you demonstrate compliance with applicable mercury emission limits using . . .	You must meet these operating limits . . .
1. Fabric filter control	a. Maintain opacity to less than or equal to 10 percent opacity (daily block average); OR b. Install and operate a bag leak detection system according to § 63.11221 and operate the fabric filter such that the bag leak detection system alarm does not sound more than 5 percent of the operating time during each 6-month period.
2. Electrostatic precipitator control	Maintain opacity to less than or equal to 10 percent opacity (daily block average).
3. Dry scrubber or carbon injection control	Maintain the minimum sorbent or carbon injection rate at or above the operating levels established during the performance test that demonstrated compliance with the applicable emission limit for mercury.
4. Fuel analysis	Maintain the fuel type or fuel mixture (annual average) such that the mercury emission rates calculated according to § 63.11211(c) is less than the applicable emission limits for mercury.

As stated in § 63.11212, you must comply with the following requirements for performance (stack) test for new affected sources:

TABLE 4 TO SUBPART JJJJJJ OF PART 63—PERFORMANCE (STACK) TESTING REQUIREMENTS

To conduct a performance test for the following pollutant . . .	You must . . .	Using . . .
1. Particulate Matter	a. Select sampling ports location and the number of traverse points.	Method 1 in appendix A to part 60 of this chapter.
	b. Determine velocity and volumetric flow-rate of the stack gas.	Method 2, 2F, or 2G in appendix A to part 60 of this chapter.
	c. Determine oxygen and carbon dioxide concentrations of the stack gas.	Method 3A or 3B in appendix A to part 60 of this chapter, or ASTM D6522–00 (IBR, see § 63.14(b)), or ASME PTC 19, Part 10(1981) (IBR, see § 63.14(i)).
	d. Measure the moisture content of the stack gas	Method 4 in appendix A to part 60 of this chapter.
	e. Measure the particulate matter emission concentration.	Method 5 or 17 (positive pressure fabric filters must use Method 5D) in appendix A to part 60 of this chapter.
	f. Convert emissions concentration to lb/MMBtu emission rates.	Method 19 F-factor methodology in appendix A to part 60 of this chapter.
2. Mercury	a. Select sampling ports location and the number of traverse points.	Method 1 in appendix A to part 60 of this chapter.
	b. Determine velocity and volumetric flow-rate of the stack gas.	Method 2, 2F, or 2G in appendix A to part 60 of this chapter.
	c. Determine oxygen and carbon dioxide concentrations of the stack gas.	Method 3A or 3B in appendix A to part 60 of this chapter, or ASTM D6522–00 (IBR, see § 63.14(b)), or ASME PTC 19, Part 10(1981)(IBR, see § 63.14(i)).
	d. Measure the moisture content of the stack gas	Method 4 in appendix A to part 60 of this chapter.
	e. Measure the mercury emission concentration	Method 29 in appendix A to part 60 of this chapter or Method 101A in appendix B to part 61 of this chapter or ASTM Method D6784–02 (IBR, see § 63.14(b)).
	f. Convert emissions concentration to lb/MMBtu emission rates.	Method 19 F-factor methodology in appendix A to part 60 of this chapter.
3. Carbon Monoxide	a. Select the sampling ports location and the number of traverse points.	Method 1 in appendix A to part 60 of this chapter.
	b. Determine velocity and volumetric flow-rate of the stack gas.	Method 2, 2F, or 2G in appendix A to part 60 of this chapter.

TABLE 4 TO SUBPART JJJJJJ OF PART 63—PERFORMANCE (STACK) TESTING REQUIREMENTS—Continued

To conduct a performance test for the following pollutant . . .	You must . . .	Using . . .
	c. Determine oxygen and carbon dioxide concentrations of the stack gas.	Method 3A or 3B in appendix A to part 60 of this chapter, or ASTM D6522–00 (IBR, see § 63.14(b)), or ASME PTC 19, Part 10(1981)(IBR, see § 63.14(i)).
	d. Measure the moisture content of the stack gas	Method 4 in appendix A to part 60 of this chapter.
	e. Measure the carbon monoxide emission concentration.	Method 10, 10A, or 10 B in appendix A to part 60 of this chapter or ASTM D6522–00 (IBR, see § 63.14(b).
	f. Convert emissions concentration to lb/MMBtu emission rates.	Method 19 F-factor methodology in appendix A to part 60 of this chapter.

As stated in § 63.11213, you must comply with the following requirements for fuel analysis testing for new affected sources:

TABLE 5 TO SUBPART JJJJJJ OF PART 63—FUEL ANALYSIS REQUIREMENTS

To conduct a fuel analysis for the following pollutant . . .	You must . . .	Using . . .
1. Mercury	a. Collect fuel samples	Procedure in § 63.11213(c) or ASTM D2234–D2234M–03$^{\varepsilon 1}$ (for coal) (IBR, see § 63.14(b)) or ASTM D6323–98 (2003) (for biomass) (IBR, see § 63.14(b)) or equivalent.
	b. Compose fuel samples	Procedure in § 63.11213(c) or equivalent.
	c. Prepare composited fuel samples	SW–846–3050B (for solid samples) or SW–846–3020A (for liquid samples) or ASTM D2013–04 (for coal) (IBR, see § 63.14(b)) or ASTM D5198–92 (2003) (for biomass) (IBR, see § 63.14(b)) or equivalent.
	d. Determine heat content of the fuel type	ASTM D5865–04 (for coal) (IBR, see § 63.14(b)) or ASTM E711–87 (1996) (for biomass) (IBR, see § 63.14(b)) or equivalent.
	e. Determine moisture content of the fuel type	ASTM D3173–03 (IBR, see § 63.14(b)) or ASTM E871–82 (1998) (IBR, see § 63.14(b)) or equivalent.
	f. Measure mercury concentration in fuel sample	ASTM D6722–01 (for coal) (IBR, see § 63.14(b)) or SW–846–7471A (for solid samples) or SW–846 7470A (for liquid samples) or equivalent.
	g. Convert concentrations into units of lb/MMBtu of heat content.	

As stated in § 63.11235, you must comply with the applicable General Provisions according to the following:

TABLE 6 TO SUBPART JJJJJJ OF PART 63—APPLICABILITY OF GENERAL PROVISIONS TO SUBPART JJJJJJ

Citation	Subject	Applies to subpart JJJJJJ
§ 63.1	Applicability	Yes.
§ 63.2	Definitions	Yes.
§ 63.3	Units and Abbreviations	Yes.
§ 63.4	Prohibited Activities and Circumvention	Yes.
§ 63.5	Preconstruction Review and Notification Requirements.	No.
§ 63.6(a), (b)(1)–(b)(5), (b)(7), (c), (f)(2)–(3), (g), (i), (j).	Compliance with Standards and Maintenance Requirements.	Yes.
§ 63.6(e)(1), (e)(3), (f)(1), and (h)	Startup, shutdown, and malfunction requirements and Opacity/Visible Emission Limits.	No. Standards apply at all times, including during startup, shutdown, and malfunction events.
§ 63.7(a), (b), (c), (d), (e)(2)–(e)(9), (f), (g), and (h).	Performance Testing Requirements	Yes.
§ 63.7(e)(1)	Conditions for conducting performance tests	No. Subpart DDDDD specifies conditions for conducting performance tests at § 63.11210.
§ 63.8	Monitoring Requirements	Yes.

TABLE 6 TO SUBPART JJJJJJ OF PART 63—APPLICABILITY OF GENERAL PROVISIONS TO SUBPART JJJJJJ—Continued

Citation	Subject	Applies to subpart JJJJJJ
§ 63.9	Notification Requirements	Yes. Subpart JJJJJJ requires submission of Notification of Compliance Status within 120 days of compliance date unless a performance test is required.
§ 63.10(a), (b)(1), (b)(2)(i)–(iii), (b)(2)(vi)–(xiv), (c)(1)–(c)(14), (d)(1)–(2), and (f).	Recordkeeping and Reporting Requirements	Yes.
§ 63.10(b)(2)(iv)–(v), (b)(3), (d)(3)–(5), and (e)		No, Subpart JJJJJJ requires submission on an annual basis.
§ 63.10(c)(15)	Allows use of SSM plan	No.
§ 63.11	Control Device Requirements	No.
§ 63.12	State Authority and Delegation	Yes.
§ 63.13–63.16	Addresses, Incorporation by Reference, Availability of Information, Performance Track Provisions.	Yes.
§ 63.1(a)(5), (a)(7)–(a)(9), (b)(2), (c)(3)–(4), (d), 63.6(b)(6), (c)(3), (c)(4), (d), (e)(2), (e)(3)(ii), (h)(3), (h)(5)(iv), 63.8(a)(3), 63.9(b)(3), (h)(4), 63.10(c)(2)–(4), (c)(9).	Reserved	No.

[FR Doc. 2010–10832 Filed 6–3–10; 8:45 am]

BILLING CODE 6560–50–P

Federal Register

Friday,
June 4, 2010

Part IV

Environmental Protection Agency

40 CFR Part 60

Standards of Performance for New Stationary Sources and Emission Guidelines for Existing Sources: Commercial and Industrial Solid Waste Incineration Units; Proposed Rule

ENVIRONMENTAL PROTECTION AGENCY

40 CFR Part 60

[EPA–HQ–OAR–2003–0119; FRL–9148–4]

RIN 2060–AO12

Standards of Performance for New Stationary Sources and Emission Guidelines for Existing Sources: Commercial and Industrial Solid Waste Incineration Units

AGENCY: Environmental Protection Agency (EPA).

ACTION: Proposed rule.

SUMMARY: On December 1, 2000, EPA adopted new source performance standards and emission guidelines for commercial and industrial solid waste incineration units established under Sections 111 and 129 of the Clean Air Act. In 2001, EPA granted a petition for reconsideration regarding the definitions of "commercial and industrial waste" and "commercial and industrial solid waste incineration unit." In 2001, the United States Court of Appeals for the District of Columbia Circuit granted EPA's voluntary remand, without vacatur, of the 2000 rule. In 2005, EPA proposed and finalized the commercial and industrial solid waste incineration definition rule which revised the definition of "solid waste," "commercial and industrial waste," and "commercial and industrial waste incineration unit." In 2007, the United States Court of Appeals for the District of Columbia Circuit vacated and remanded the 2005 commercial and industrial solid waste incineration definition rule.

This action provides EPA's response to the 2001 voluntary remand of the 2000 rule and the vacatur and remand of the commercial and industrial solid waste incineration definition rule in 2007. In addition, this action includes the five-year technology review of the new source performance standards and emission guidelines required under Section 129. This action also proposes other amendments that EPA believes are necessary to adequately address air emissions from commercial and industrial solid waste incineration units.

DATES: *Comments.* Comments must be received on or before July 19, 2010. Under the Paperwork Reduction Act, comments on the information collection provisions must be received by the Office of Management and Budget (OMB) on or before July 6, 2010.

Public Hearing. We will hold a public hearing concerning this proposed rule and the interrelated proposed Boiler and RCRA rules, discussed in this proposal and published in the proposed rules section of today's **Federal Register**, on June 21, 2010. Persons requesting to speak at a public hearing must contact EPA by June 14, 2010.

ADDRESSES: Submit your comments, identified by Docket ID No. EPA–HQ–OAR–2003–0119, by one of the following methods:

http://www.regulations.gov: Follow the on-line instructions for submitting comments.

E-mail: Send your comments via electronic mail to *a-and-r-Docket@epa.gov,* Attention Docket ID No. EPA–HQ–OAR–2003–0119.

Facsimile: Fax your comments to (202) 566–9744, Attention Docket ID No. EPA–HQ–OAR–2003–0119.

Mail: Send your comments to: EPA Docket Center (EPA/DC), Environmental Protection Agency, Mailcode 6102T, 1200 Pennsylvania Ave., NW., Washington, DC 20460, Attention Docket ID No. EPA–HQ–OAR–2003–0119. Please include a total of two copies. We request that a separate copy also be sent to the contact person identified below (*see* **FOR FURTHER INFORMATION CONTACT**).

Hand Delivery: Deliver your comments to: EPA Docket Center (EPA/DC), EPA West Building, Room 3334, 1301 Constitution Ave., NW., Washington, DC 20460, Attention Docket ID No. EPA–HQ–OAR–2003–0119. Such deliveries are accepted only during the normal hours of operation (8:30 a.m. to 4:30 p.m., Monday through Friday, excluding legal holidays), and special arrangements should be made for deliveries of boxed information.

Instructions: Direct your comments to Docket ID No. EPA–HQ–OAR–2003–0119. The EPA's policy is that all comments received will be included in the public docket and may be made available on-line at *http://www.regulations.gov,* including any personal information provided, unless the comment includes information claimed to be Confidential Business Information (CBI) or other information whose disclosure is restricted by statute. Do not submit information that you consider to be CBI or otherwise protected through *http://www.regulations.gov* or e-mail. The *http://www.regulations.gov* Web site is an "anonymous access" system, which means EPA will not know your identity or contact information unless you provide it in the body of your comment. If you send an e-mail comment directly to EPA without going through *http://www.regulations.gov,* your e-mail address will be automatically captured and included as part of the comment that is placed in the public docket and made available on the Internet. If you submit an electronic comment, EPA recommends that you include your name and other contact information in the body of your comment and with any disk or CD–ROM you submit. If EPA cannot read your comment due to technical difficulties and cannot contact you for clarification, EPA may not be able to consider your comment. Electronic files should avoid the use of special characters, any form of encryption and be free of any defects or viruses.

Public Hearing: We will hold a public hearing concerning the proposed rule on June 21, 2010. Persons interested in presenting oral testimony at the hearing should contact Ms. Joan Rogers, Natural Resources and Commerce Group, at (919) 541–4487 by June 14, 2010. The public hearing will be held in the Washington, DC area at a location and time that will be posted at the following Web site: *http://www.epa.gov/airquality/combustion.* Please refer to this Web site to confirm the date of the public hearing as well. If no one requests to speak at the public hearing by June 14, 2010 then the public hearing will be cancelled and a notification of cancellation posted on the following Web site: *http://www.epa.gov/airquality/combustion.*

Docket: EPA has established a docket for this action under Docket ID No. EPA–HQ–OAR–2003–0119. All documents in the docket are listed in the *http://www.regulations.gov* index. Although listed in the index, some information is not publicly available, *e.g.,* CBI or other information whose disclosure is restricted by statute. Certain other material, such as copyrighted material, will be publicly available only in hard copy form. Publicly available docket materials are available either electronically at *http://www.regulations.gov* or in hard copy at the EPA Docket Center EPA/DC, EPA West, Room 3334, 1301 Constitution Ave., NW., Washington, DC. The Public Reading Room is open from 8:30 a.m. to 4:30 p.m., Monday through Friday, excluding legal holidays. The telephone number for the Public Reading Room is (202) 566–1744 and the telephone number for the EPA Docket Center is (202) 566–1742.

FOR FURTHER INFORMATION CONTACT: Ms. Charlene Spells, Natural Resource and Commerce Group, Sector Policies and Programs Division (E143–03), Environmental Protection Agency, Research Triangle Park, North Carolina

27711; telephone number: (919) 541–5255; fax number: (919) 541–3470; e-mail address: *spells.charlene@epa.gov* or Ms. Toni Jones, Natural Resource and Commerce Group, Sector Policies and Programs Division (E143–03), Environmental Protection Agency, Research Triangle Park, North Carolina 27711; telephone number: (919) 541–0316; fax number: (919) 541–3470; e-mail address: *jones.toni@epa.gov.*

SUPPLEMENTARY INFORMATION:

Organization of This Document. The following outline is provided to aid in locating information in this preamble.

I. General Information
A. Does the proposed action apply to me?
B. What should I consider as I prepare my comments?
II. Background
A. What is the statutory authority for these proposed rules?
B. What are the primary sources of emissions and what are the emissions and current controls?
C. What is the relationship between this proposed rule and other combustion rules?
III. Summary of the Proposed Rule
A. Litigation and Proposed Remand Response
B. Proposed CAA Section 129(a)(5) Five-Year Review Response
C. EPA's Approach in Conducting the Five-Year Review
D. Other Proposed Amendments
E. Proposed State Plan Implementation Schedule for Existing CISWI
F. Proposed Changes to the Applicability Date of the 2000 NSPS and EG
IV. Rationale
A. Rationale for the Proposed Response to the Remand and the Proposed CAA Section 129(a)(5) Five-Year Review Response
B. Rationale for Proposed Subcategories
C. Rationale for MACT Floor Emission Limits
D. Rationale for Beyond-the-Floor Alternatives
E. Rationale for Other Proposed Amendments
V. Impacts of the Proposed Action
A. What are the primary air impacts?
B. What are the water and solid waste impacts?
C. What are the energy impacts?
D. What are the secondary air impacts?
E. What are the cost and economic impacts?
F. What are the benefits?
VI. Relationship of the Proposed Action to Section 112(c)(6) of the CAA
VII. Statutory and Executive Order Reviews
A. Executive Order 12866: Regulatory Planning and Review
B. Paperwork Reduction Act
C. Regulatory Flexibility Act
D. Unfunded Mandates Reform Act
E. Executive Order 13132: Federalism
F. Executive Order 13175: Consultation and Coordination With Indian Tribal Governments
G. Executive Order 13045: Protection of Children From Environmental Health and Safety Risks
H. Executive Order 13211: Actions That Significantly Affect Energy Supply, Distribution or Use
I. National Technology Transfer and Advancement Act
J. Executive Order 12898: Federal Actions To Address Environmental Justice in Minority Populations and Low-Income Populations

I. General Information

A. Does the proposed action apply to me?

Regulated Entities. Categories and entities potentially affected by the proposed action are those which operate commercial and industrial solid waste incineration (CISWI) units. The new source performance standards (NSPS) and emission guidelines (EG), hereinafter referred to as "standards," for CISWI affect the following categories of sources:

Category	NAICS Code	Examples of potentially regulated entities [1]
Any industrial or commercial facility using a solid waste incinerator.	211, 212, 486	Mining, oil and gas exploration operations; pipeline operators.
	221	Utility providers.
	321, 322, 337	Manufacturers of wood products; manufacturers of pulp, paper and paperboard; manufacturers of furniture and related products.
	325, 326	Manufacturers of chemicals and allied products; manufacturers of plastics and rubber products.
	327	Manufacturers of cement.
	333, 336	Manufacturers of machinery; manufacturers of transportation equipment.
	42, 44, 45	Wholesale merchants; retail merchants.

Thistable is not intended to be exhaustive, but rather provides a guide for readers regarding entities likely to be affected by the proposed action. To determine whether your facility would be affected by the proposed action, you should examine the applicability criteria in 40 CFR 60.2010 of subpart CCCC and 40 CFR 60.2505 of subpart DDDD. If you have any questions regarding the applicability of the proposed action to a particular entity, contact the person listed in the preceding **FOR FURTHER INFORMATION CONTACT** section.

[1] Note that the rule contains definitions of the subcategories of CISWI units and a list of types of combustion units that are excluded. For further discussion, see Section III.D.1 of this preamble.

B. What should I consider as I prepare my comments?

1. Submitting CBI

Do not submit information that you consider to be CBI electronically through *http://www.regulations.gov* or e-mail. Send or deliver information identified as CBI to only the following address: Ms. Toni Jones, c/o OAQPS Document Control Officer (Room C404–02), U.S. EPA, Research Triangle Park, NC 27711, Attention Docket ID No. EPA–HQ–OAR–2003–0119. Clearly mark the part or all of the information that you claim to be CBI. For CBI information in a disk or CD–ROM that you mail to EPA, mark the outside of the disk or CD–ROM as CBI and then identify electronically within the disk or CD–ROM the specific information that is claimed as CBI. In addition to one complete version of the comment that includes information claimed as CBI, a copy of the comment that does not contain the information claimed as CBI must be submitted for inclusion in the public docket. Information marked as CBI will not be disclosed except in accordance with procedures set forth in 40 CFR part 2.

If you have any questions about CBI or the procedures for claiming CBI, please consult the person identified in the **FOR FURTHER INFORMATION CONTACT** section.

2. Tips for Preparing Your Comments

When submitting comments, remember to:

Identify the rulemaking by docket number and other identifying

information (subject heading, **Federal Register** date and page number).

Follow directions. EPA may ask you to respond to specific questions or organize comments by referencing a Code of Federal Regulations (CFR) part or section number.

Explain why you agree or disagree; suggest alternatives and substitute language for your requested changes.

Describe any assumptions and provide any technical information and/or data that you used.

If you estimate potential costs or burdens, explain how you arrived at your estimate in sufficient detail to allow for it to be reproduced.

Provide specific examples to illustrate your concerns and suggest alternatives.

Explain your views as clearly as possible, avoiding the use of profanity or personal threats.

Make sure to submit your comments by the comment period deadline identified in the preceding section titled **DATES**.

3. Docket

The docket number for the proposed action regarding the CISWI NSPS (40 CFR part 60, subpart CCCC) and EG (40 CFR part 60, subpart DDDD) is Docket ID No. EPA–HQ–OAR–2003–0119.

4. Worldwide Web (WWW)

In addition to being available in the docket, an electronic copy of the proposed action is available on the WWW through the Technology Transfer Network Web site (TTN Web). Following signature, EPA posted a copy of the proposed action on the TTN's policy and guidance page for newly proposed or promulgated rules at *http://www.epa.gov/ttn/oarpg.* The TTN provides information and technology exchange in various areas of air pollution control.

II. Background

A. What is the statutory authority for these proposed rules?

Section 129 of the Clean Air Act (CAA), entitled "Solid Waste Combustion," requires EPA to develop and adopt standards for solid waste incineration units pursuant to CAA Sections 111 and 129. Section 129(a)(1)(A) of the CAA requires EPA to establish performance standards, including emission limitations, for "solid waste incineration units" generally and, in particular, for "solid waste incineration units combusting commercial or industrial waste" (CAA Section 129(a)(1)(D)). Section 129 of the CAA defines "solid waste incineration unit" as "a distinct operating unit of any facility which combusts any solid waste material from commercial or industrial establishments or the general public" (Section 129(g)(1)). Section 129 of the CAA also provides that "solid waste" shall have the meaning established by EPA pursuant to its authority under the Resource Conservation and Recovery Act (RCRA) (Section 129(g)(6)).

In *Natural Resources Defense Council* v. *EPA,* 489 F. 3d 1250 (DC Cir. 2007), the United States Court of Appeals for the District of Columbia Circuit (the Court) vacated the CISWI Definitions Rule, 70 FR 55568 (September 22, 2005), which EPA issued pursuant to CAA Section 129(a)(1)(D). In that rule, EPA defined the term "commercial or industrial solid waste incineration unit" to mean a combustion unit that combusts "commercial or industrial waste." The rule defined "commercial or industrial waste" to mean waste combusted at a unit that does not recover thermal energy from the combustion for a useful purpose. Under these definitions, only those units that combusted commercial or industrial waste and were not designed to, or did not operate to, recover thermal energy from the combustion, were subject to Section 129 standards. In vacating the rule, the Court found that the definitions in the CISWI Definitions Rule were inconsistent with the CAA. Specifically, the Court held that the term "solid waste incineration unit" in CAA Section 129(g)(1) "unambiguously include[s] among the incineration units subject to its standards any facility that combusts any commercial or industrial solid waste material at all—subject to the four statutory exceptions identified [in CAA Section 129(g)(1)]." *NRDC* v. *EPA,* 489 F.3d at 1257–58.

In response to the Court's vacatur of the CISWI Definitions rule, EPA initiated a rulemaking to define which non-hazardous secondary materials are "solid waste" for purposes of subtitle D (non-hazardous waste) of the RCRA when burned in a combustion unit. (See Advance Notice of Proposed Rulemaking (74 FR 41, January 2, 2009) soliciting comment on whether certain non-hazardous secondary materials used as alternative fuels or ingredients are solid wastes within the meaning of Subtitle D of the RCRA). That definition, in turn, would determine the applicability of CAA Section 129(a) to commercial and industrial combustion units.

In a parallel action, EPA is proposing a definition of solid waste pursuant to Subtitle D of RCRA. That action is relevant to this proceeding because some energy recovery units and kilns combust solid waste as alternative fuels. Such units that combust solid waste (as defined pursuant to Subtitle D of RCRA) would be subject to standards under the CAA Section 129 CISWI rules rather than under Section 112 rules applicable to boilers and kilns (*e.g.* cement kilns).

EPA recognizes that it has imperfect information on the exact nature of the non-hazardous secondary materials which energy recovery units and kilns combust, including, for example, information as to the provider(s) of the non-hazardous secondary materials, how much processing the non-hazardous secondary materials may have undergone, if any, and other issues potentially relevant in a determination as to whether non-hazardous secondary materials are solid waste, as the Administrator has proposed to define that term under RCRA. We nevertheless used the information currently available to EPA to determine which materials are solid waste, the burning of which would subject a unit to CAA Section 129, and which materials are not solid waste. Energy recovery units and kilns that are burning non-hazardous secondary materials that are not solid waste would be subject to the standard under CAA Section 112 that is applicable to such units. We based the standards in this proposed rule on the sources we determined would be subject to CISWI because they combust solid waste as defined in EPA's proposed Solid Waste Definition Rulemaking, which, as noted above, is being proposed in parallel with this proposed rule.

Sections 111(b) and 129(a) of the CAA (NSPS program) address emissions from new CISWI units and CAA Sections 111(d) and 129(b) (EG program) address emissions from existing CISWI units. The NSPS are directly enforceable Federal regulations and under CAA Section 129(f)(1) become effective six months after promulgation. Under CAA Section 129(f)(2), the EG become effective and enforceable no later than three years after EPA approves a state plan implementing the EG or five years after the date they are promulgated, whichever is earlier.

The CAA sets forth a two-stage approach to regulating emissions from solid waste incinerator units. The statute also provides EPA with substantial discretion to distinguish among classes, types and sizes of incinerator units within a category while setting standards. In the first stage of setting standards, CAA Section 129(a)(2) requires EPA to establish technology-based emission standards that reflect levels of control EPA determines are achievable for new and existing units, after considering costs, non-air quality health and

environmental impacts and energy requirements associated with the implementation of the standards. Section 129(a)(5) of the CAA then directs EPA to review those standards and revise them as necessary every five years. In the second stage, CAA Section 129(h)(3) requires EPA to determine whether further revisions of the standards are necessary in order to provide an ample margin of safety to protect public health. *See, e.g., NRDC and LEAN* v. *EPA,* 529 F.3d 1077, 1079–80 (DC Cir. 2008) (addressing the similarly required two-stage approach under CAA Sections 112(d) and (f) and upholding EPA's implementation of same).

In setting forth the methodology EPA must use to establish the first-stage technology-based standards, CAA Section 129(a)(2) provides that standards "applicable to solid waste incineration units promulgated under Section 111 and this section shall reflect the maximum degree of reduction in emissions of [certain listed air pollutants] that the Administrator, taking into consideration the cost of achieving such emission reduction and any non-air quality health and environmental impacts and energy requirements, determines is achievable for new and existing units in each category." This level of control is referred to as a maximum achievable control technology, or MACT standard.

In promulgating a MACT standard, EPA must first calculate the minimum stringency levels for new and existing solid waste incineration units in a category, generally based on levels of emissions control achieved or required to be achieved by the subject units. The minimum level of stringency is called the MACT "floor," and CAA Section 129(a)(2) sets forth differing levels of minimum stringency that EPA's standards must achieve, based on whether they regulate new and reconstructed sources, or existing sources. For new and reconstructed sources, CAA Section 129(a)(2) provides that the "degree of reduction in emissions that is deemed achievable * * * shall not be less stringent than the emissions control that is achieved in practice by the best controlled similar unit, as determined by the Administrator." Emissions standards for existing units may be less stringent than standards for new units, but "shall not be less stringent than the average emissions limitation achieved by the best performing 12 percent of units in the category."

The MACT floors form the least stringent regulatory option EPA may consider in the determination of MACT standards for a source category. EPA must also determine whether to control emissions "beyond-the-floor," after considering the costs, non-air quality health and environmental impacts and energy requirements of such more stringent control.

In general, all MACT analyses involve an assessment of the emissions from the best performing units in a source category. The assessment can be based on actual emissions data, knowledge of the air pollution control in place in combination with actual emissions data, or on state regulatory requirements that may enable EPA to estimate the actual performance of the regulated units. For each source category, the assessment involves a review of actual emissions data with an appropriate accounting for emissions variability. Other methods of estimating emissions can be used provided that the methods can be shown to provide reasonable estimates of the actual emissions performance of a source or sources. Where there is more than one method or technology to control emissions, the analysis may result in a series of potential regulations (called regulatory options), one of which is selected as MACT.

Each regulatory option EPA considers must be at least as stringent as the CAA's minimum stringency "floor" requirements. EPA must examine, but is not necessarily required to adopt, more stringent "beyond-the-floor" regulatory options to determine MACT. Unlike the floor minimum stringency requirements, EPA must consider various impacts of the more stringent regulatory options in determining whether MACT standards are to reflect "beyond-the-floor" requirements. If EPA concludes that the more stringent regulatory options have unreasonable impacts, EPA selects the "floor-based" regulatory option as MACT. But if EPA concludes that impacts associated with "beyond-the-floor" levels of control are acceptable in light of additional emissions reductions achieved, EPA selects those levels as MACT.

As stated earlier, the CAA requires that MACT for new sources be no less stringent than the emissions control achieved in practice by the best controlled similar unit. Under CAA Section 129(a)(2), EPA determines the best control currently in use for a given pollutant and establishes one potential regulatory option at the emission level achieved by that control with an appropriate accounting for emissions variability. More stringent potential beyond-the-floor regulatory options might reflect controls used on other sources that could be applied to the source category in question.

For existing sources, the CAA requires that MACT be no less stringent than the average emissions limitation achieved by the best performing 12 percent of units in a source category. EPA must determine some measure of the average emissions limitation achieved by the best performing 12 percent of units to form the floor regulatory option. More stringent beyond-the-floor regulatory options reflect other or additional controls capable of achieving better performance.

B. What are the primary sources of emissions and what are the emissions and current controls?

We are proposing to define a CISWI unit as any combustion unit at a commercial or industrial facility that is used to combust solid waste (as defined under the RCRA). *See* proposed 40 CFR 60.2265 (NSPS) and 60.2875 (EG). In this proposed rule, CISWI units include incinerators designed to discard waste materials; energy recovery units (*e.g.,* units that would be boilers if they did not burn solid waste) designed for heat recovery that combust solid waste materials; kilns and other industrial units that combust solid waste materials in the manufacture of a product; and burn-off ovens that combust residual materials off racks, parts, drums or hooks so that those items can be re-used in various production processes.

Combustion of solid waste causes the release of a wide array of air pollutants, some of which exist in the waste feed material and are released unchanged during combustion and some of which are generated as a result of the combustion process itself. These pollutants include particulate matter (PM); metals, including lead (Pb), cadmium (Cd) and mercury (Hg); toxic organics, including chlorinated dibenzo-p-dioxins/dibenzofurans (dioxin, furans); carbon monoxide (CO); nitrogen oxides (NO_X); and acid gases, including hydrogen chloride (HCl) and sulfur dioxide (SO_2).

Depending on the type of unit and currently applicable regulations or permit conditions, units may or may not be equipped with add-on control devices to control emissions. For example, most of the CISWI units that operate without heat recovery are not equipped with add-on controls. Those that are controlled use wet scrubbers, dry scrubbers, electrostatic precipitators (ESPs), or fabric filters, either alone or in combination. Some energy recovery units that combust solid waste are not equipped with add-on controls, but most are controlled with one or more of the following: cyclones or multi-clones, fabric filters, ESPs, wet scrubbers,

venturi scrubbers, selective non-catalytic reduction (SNCR) or spray dryers. In addition to add-on controls, many CISWI units are controlled through the use of pollution prevention measures (*i.e.,* waste segregation) and good combustion control practices.

Waste segregation is the separation of certain components of the waste stream in order to reduce the amount of air pollution emissions associated with that waste when incinerated. The separated waste may include paper, cardboard, plastics, glass, batteries or metals. Separation of wastes can reduce the amount of chlorine- and metal-containing wastes being incinerated, which results in lower emissions of HCl, dioxin, furans, Hg, Cd and Pb.

Good combustion control practices include proper design, construction, operation and maintenance practices to destroy or prevent the formation of air pollutants prior to their release to the atmosphere. Test data for other types of combustion units indicate that as secondary chamber residence time and temperature increase, emissions decrease. Proper mixing of flue gases in the combustion chamber also promotes complete combustion. Combustion control is most effective in reducing dioxin, furans, other organic pollutants, PM, NO_X and CO emissions.

The 2000 CISWI standards and the proposed revised standards are designed to reduce air pollutants, including HCl, CO, Pb, Cd, Hg, PM, dioxin, furans (total, or 2,3,7,8-tetrachlorinated dibenzo-p-dioxin toxic equivalent (TEQ)), NO_X and SO_2, emitted from new and existing CISWI units. Units in the incinerator subcategory as defined in this proposed rule are currently subject to the 2000 CISWI standards and are already required to be in compliance with the NSPS or EG. The 2000 CISWI NSPS apply to CISWI units in the incinerator subcategory if construction of a unit began after November 30, 1999, or if modification of a unit began after June 1, 2001. The 2000 CISWI NSPS apply to units in the incinerator subcategory and became effective on June 1, 2001, and apply as of that date or at start-up of a CISWI incinerator unit, whichever is later. The 2000 CISWI EG apply to CISWI units in the incinerator subcategory if construction of a unit began on or before November 30, 1999, and compliance was required at the latest by December 2005. This proposed rule would establish revised standards for units in the incinerator subcategory and establish standards for the other four subcategories of CISWI units, and the emission limitations in the proposed revised NSPS and EG would apply at all times.

C. What is the relationship between this proposed rule and other combustion rules?

This proposed rule addresses the combustion of solid waste materials (as defined by the Administrator under the RCRA) in combustion units at commercial and industrial facilities. If an owner or operator of a CISWI unit ceases combusting solid waste, the affected unit would no longer be subject to this regulation under CAA Section 129. A rulemaking under CAA Section 112 is being proposed in a parallel action that is relevant to this action because it would apply to boilers and process heaters located at a major source that do not combust solid waste. EPA has also proposed, but not yet finalized, revised Section 112 National Emission Standards for Hazardous Air Pollutants (NESHAP) for cement kilns. *See* 74 FR 21136 (May 6, 2009) (proposing revisions to 40 CFR part 63, Subpart LLL). Cement kilns burning solid waste would be subject to this proposed rule, not the applicable NESHAP.

III. Summary of the Proposed Rule

A. Litigation and Proposed Remand Response

1. What is the history of the CISWI standards?

On December 1, 2000, EPA published a notice of final rulemaking establishing the NSPS and EG for CISWI units (60 FR 75338), hereinafter referred to as the 2000 CISWI rule. Thereafter, on August 17, 2001, EPA granted a request for reconsideration, pursuant to CAA Section 307(d)(7)(B) of the CAA, submitted on behalf of the National Wildlife Federation and the Louisiana Environmental Action Network, related to the definition of "commercial and industrial solid waste incineration unit" and "commercial or industrial waste" in EPA's CISWI rulemaking. In granting the petition for reconsideration, EPA agreed to undertake further notice and comment proceedings related to these definitions. In addition, on January 30, 2001, the Sierra Club filed a petition for review in the U.S. Court of Appeals for the District of Columbia Circuit challenging EPA's final CISWI rule. On September 6, 2001, the Court entered an order granting EPA's motion for a voluntary remand of the CISWI rule, without vacatur. EPA's request for a voluntary remand of the final CISWI rule was taken to allow the EPA to address concerns related to EPA's procedures for establishing MACT floors for CISWI units in light of the Court's decision in *Cement Kiln Recycling Coalition* v. *EPA,* 255 F.3d 855 (DC Cir. 2001) (*Cement Kiln*). Neither EPA's granting of the petition for reconsideration, nor the Court's order granting a voluntary remand, stayed, vacated or otherwise influenced the effectiveness of the 2000 CISWI rule. Specifically, CAA Section 307(d)(7)(B) provides that "reconsideration shall not postpone the effectiveness of the rule," except that "[t]he effectiveness of the rule may be stayed during such reconsideration * * * by the Administrator or the court for a period not to exceed three months." Neither EPA nor the Court stayed the effectiveness of the final CISWI regulations in connection with the reconsideration petition. In addition, the District of Columbia Circuit granted EPA's motion for a remand without vacatur; therefore, the Court's remand order had no impact on the implementation of the 2000 CISWI rule.

On February 17, 2004, EPA published a proposed rule soliciting comments on the definitions of "solid waste," "commercial and industrial waste," and "commercial and industrial solid waste incineration unit." On September 22, 2005, EPA published in the **Federal Register** the final rule reflecting our decisions with respect to the CISWI Definitions Rule. The rule was challenged and, on June 8, 2007, the Court vacated and remanded the CISWI Definitions Rule. In vacating the rule, the Court found that CAA Section 129 unambiguously includes among the incineration units subject to its standards any facility that combusts any solid waste material at all, subject to four statutory exceptions. While the Court vacated the CISWI Definitions Rule, the 2000 CISWI rule remains in effect.

This action provides EPA's response to the voluntary remand of the 2000 CISWI rule and to the 2007 vacatur and remand of the CISWI Definitions Rule. In addition, this action addresses the five-year technology review that is required under CAA Section 129(a)(5).

2. What was EPA's MACT floor methodology in the 2000 CISWI rulemaking and how has the methodology been changed to respond to the voluntary remand?

In 2000, the methodology that EPA followed to establish the MACT floors included identification of a "MACT floor technology" and calculation of MACT floors using emission information from all units, not only the best performing units, that employed the MACT floor control technology. EPA recognized that this methodology was rejected by the Court in the *Cement Kiln* case, which was decided after EPA

promulgated the 2000 CISWI standards. In light of the court decision, EPA requested a voluntary remand of the CISWI standards to re-evaluate those standards in light of the *Cement Kiln* decision in order to correct the methodology. See *Cement Kiln,* 255 F.3d 855 (Finding that EPA is permitted to account for variability by setting floors at a level that reasonably estimates the performance of the best controlled similar unit (or units) under the worst reasonably foreseeable circumstances, but not the worst foreseeable circumstances faced by any unit in the source category).

Accordingly, this action does not use the MACT floor methodology from 2000. Instead, we used emissions test data to calculate the MACT floors.[2] For existing units, we ranked individual CISWI units based on actual performance and established MACT floors based on the average of the best performing 12 percent of sources for each pollutant and subcategory, with an appropriate accounting for emissions variability. That is, the overall 3-run test average values for existing units for each pollutant were compiled and ranked to identify the best performing 12 percent of sources for each pollutant within each subcategory. Once identified, the individual test run data for these units were compiled and analyzed for variability.

As discussed in more detail in Section IV.C of this preamble, for the variability analysis, we first conducted a statistical analyses to determine whether the data used for the MACT floor calculation had a normal or log-normal distribution followed by calculation of the average and the 99th percent upper limit (UL).[3] The UL represents a value that 99 percent of the data in the MACT floor data population would fall below, and therefore accounts for variability between the individual test runs in the MACT floor data set. The UL is calculated by the following equation that is appropriate for small data sets:

$$UL = x + t(0.99,n) * s$$

Where:

x = average of the data.
t(0.99,n) = t-statistic.
n = number of data points in the population.
s = standard deviation.

The summary statistics and analyses are presented in the docket and further described in Section IV.C of this preamble. The calculated UL values for existing sources (which are based on emissions data from the best performing 12 percent of sources and evaluate variability) were selected as the proposed MACT floor emission limits for the nine regulated pollutants in each subcategory. This statistical approach is consistent with the methodology used in the October 6, 2009, Hospital/Medical/Infectious Waste Incinerators (HMIWI) rule (74 FR 51367). EPA conducted this MACT floor analysis for each pollutant for each of the five CISWI subcategories we are establishing in this proposed rule: Incinerators; energy recovery units; waste-burning kilns; burn-off ovens; and small, remote incinerators.

To determine the MACT floor for new sources, we used a UL calculation similar to that for existing sources, except the best performing unit's data within a subcategory was used to calculate the MACT floor emission limit for each pollutant instead of the average of the best performing 12 percent of units. In summary, the approach ranks individual CISWI units based on actual performance and establishes MACT floors based on the best performing source for each pollutant and subcategory, with an appropriate accounting of emissions variability. In other words, the UL was determined for the data set of individual test runs for the single best performing source for each regulated pollutant from each subcategory.

EPA also solicits comment on whether EPA should use an alternate statistical interval, the 99 percent upper prediction limit (UPL) instead of the UL. In general, a prediction interval (*e.g.,* a UPL) is useful in determining what future values are likely to be, based upon present or past background samples taken. The 99 percent UPL represents the value that one can expect the mean of future 3-run performance tests from the best-performing 12 percent of sources to fall below with 99 percent confidence, based upon the results of the independent sample of observations from the same best performing sources. The 99 percent UPL value based on the test run data for those units in the best-performing 12 percent could be calculated using one of the following spreadsheet equations depending on the distribution of data:

Normal distribution: 99% UPL = AVERAGE(Test Runs in Top 12%) + [STDEV(Test Runs in Top 12%) × TINV(2 × probability, n-1 degrees of freedom) × SQRT((1/n) + (1/m))], for a one-tailed upper prediction limit with a probability of 0.01, sample size of n and number of runs whose average will be reported to EPA for compliance of m = 3.

Lognormal distribution: 99% UPL = EXP{AVERAGE(Natural Log Values of Test Runs in Top 12%) + [STDEV(Natural Log Values of Test Runs in Top 12%) × TINV(2 × probability, n-1 degrees of freedom) × SQRT((1/n) + (1/m))]}, for a one-tailed upper prediction limit with a probability of 0.01, sample size of n and number of runs whose average will be reported to EPA for compliance of m = 3.

In addition to proposing standards for the nine pollutants discussed above, we are also proposing opacity standards for new and existing sources in the five subcategories as discussed below.

Test method measurement imprecision can also be a component of data variability. At very low emissions levels as encountered in the data used to support this rule, the inherent imprecision in the pollutant measurement method has a large influence on the reliability of the data underlying the regulatory floor or beyond-the-floor emissions limit. Of particular concern are those data that are reported near or below a test method's pollutant detection capability. In our guidance for reporting pollutant emissions used to support this rule, we specified the criteria for determining test-specific method detection levels. Those criteria insure that there is about a 1 percent probability of an error in deciding that the pollutant measured at the method detection level is present, when in fact, it was absent. Such a probability is also called a false positive or the alpha, Type I, error. Another view of this probability is that one is 99 percent certain of the presence of the pollutant measured at the method detection level. Because of matrix effects, laboratory techniques, sample size and other factors, method detection levels normally vary from test to test. We requested sources to identify (*i.e.,* flag) data which were measured below the method detection level and to report those values as equal to the test-specific method detection level.

Variability of data due to measurement imprecision is inherently and reasonably addressed in calculating the floor or beyond-the-floor emissions limit when the database represents multiple tests for which all of the data are measured significantly above the method detection level. That is less true

[2] EPA did receive some additional emissions data earlier this year, but due to the court-ordered deadline, we did not have time to review and evaluate that data. We intend to review the data submitted earlier this year from a quality assurance and completeness perspective and incorporate that data into the final standards, as appropriate. To the extent EPA receives additional emissions data during the comment period, EPA will assess that data as it develops the final emission standards.

[3] The procedure is the same as used for the Hospital/Medical/Infectious Waste Incinerators (HMIWI) rule (74 FR 51367). While the HMIWI preamble referred to this measure as the upper confidence limit (UCL), it used the same equation. In this proposal, we refer to the measure as the UL, which is a more appropriate statistical terminology for this calculation.

when the database includes emissions occurring below method detection capabilities and are reported as the method detection level values. The database is then truncated at the lower end of the measurement range (*i.e.,* no values reported below the method detection level) and we believe that a floor or beyond-the-floor emissions limit based on a truncated database or otherwise including values at or near the method detection level may not adequately account for data measurement variability. We did not adjust the calculated floor for the data used for this proposal; although, we believe that accounting for measurement imprecision should be an important consideration in calculating the floor or beyond-the-floor emissions limit. We request comment on approaches suitable to account for measurement variability in establishing the floor or beyond-the-floor emissions limit when based on measurements at or near the method detection level.

As noted above, the confidence level that a value measured at the detection level is greater than zero is about 99 percent. The expected measurement imprecision for an emissions value occurring at or near the method detection level is about 40 to 50 percent. Pollutant measurement imprecision decreases to a consistent relative 10 to 15 percent for values measured at a level about three times the method detection level.[4] One approach that we believe could be applied to account for measurement variability would require defining a method detection level that is representative of the data used in establishing the floor or beyond-the-floor emissions limits and also minimizes the influence of an outlier test-specific method detection level value. The first step in this approach would be to identify the highest test-specific method detection level reported in a data set that is also equal to or less than the floor or beyond-the-floor emissions limit calculated for the data set. This approach has the advantage of relying on the data collected to develop the floor or beyond-the-floor emissions limit while to some degree minimizing the effect of a test(s) with an inordinately high method detection level (*e.g.,* the sample volume was too small, the laboratory technique was insufficiently sensitive or the procedure for determining the detection level was other than that specified).

The second step would be to determine the value equal to three times the representative method detection level and compare it to the calculated floor or beyond-the-floor emissions limit. If three times the representative method detection level was less than the calculated floor or beyond-the-floor emissions limit, we would conclude that measurement variability is adequately addressed and we would not adjust the calculated floor or beyond-the-floor emissions limit. If, on the other hand, the value equal to three times the representative method detection level was greater than the calculated floor or beyond-the-floor emissions limit, we would conclude that the calculated floor or beyond-the-floor emissions limit does not account entirely for measurement variability. We then would use the value equal to three times the method detection level in place of the calculated floor or beyond-the-floor emissions limit to ensure that the floor or beyond-the-floor emissions limit accounts for measurement variability. We request comment on this approach.

As stated above, EPA's solid waste definition rule proposes to define which non-hazardous secondary materials that are used as fuels or ingredients in combustion units are solid wastes under Subtitle D of RCRA. In addition to the primary proposed approach set forth in the Solid Waste Definition rule, the rule solicits comments on an alternative approach for determining which secondary materials are solid waste under Subtitle D of RCRA, when combusted. The MACT analysis discussed above considers only those commercial or industrial units that are CISWI units (*i.e.,* that are units that combust "solid waste" as that term is defined by the Administrator under RCRA). Based on the MACT analysis described above, we calculated emission standards under both the primary proposed approach and the alternative approach identified in the proposed Solid Waste Definition rule. The only two subcategories for which the number of units changed under the alternative approach set forth in the solid waste definition rule were the energy recovery units and waste-burning kilns subcategories. Because the number of units in these two subcategories is different under the alternative approach, the NSPS and EG did change. Based on the information available to EPA, the number of units in the other subcategories (*i.e.,* incinerators, burn-off ovens and small, remote incinerators) remained the same under both the proposed and alternative approaches, and the NSPS and EG, therefore, did not change under the alternative approach.

Table 1 of this preamble shows a comparison of the existing source MACT limits from the 2000 CISWI rule and those developed for the five subcategories in this action based on the proposed definition of solid waste. EPA did not establish subcategories in the 2000 CISWI rule and, for that reason, a direct comparison with the standards proposed today with the 2000 standards is only possible for the incinerators subcategory. As stated above, we are proposing to subcategorize CISWI units for reasons described in Section IV.B of this preamble. The five subcategories are:

- Incinerators, which are those units that are currently regulated by the 2000 CISWI rule, are units that are used to dispose of solid waste materials.
- Energy recovery units that combust solid waste materials as a percentage of their fuel mixture. Energy recovery units include units that would be boilers or process heaters if they did not combust solid waste.
- Waste-burning kilns means a kiln that is heated, in whole or in part, by combusting solid waste (as that term is defined by the Administrator under RCRA).
- Burn-off ovens that are used to clean residual solid waste materials off of various metal parts which are then reused.
- Small, remote incinerators that combust less than one ton of waste per day and are farther than 50 miles driving distance to the closest municipal solid waste (MSW) landfill.

The proposed MACT floor emission limits for existing sources in each subcategory are shown in Table 1 of this preamble.

[4] American Society of Mechanical Engineers, *Reference Method Accuracy and Precision (ReMAP): Phase 1, Precision of Manual Stack Emission Measurements,* CRTD Vol. 60, February 2001.

TABLE 1—COMPARISON OF EXISTING SOURCE MACT FLOOR LIMITS FOR 2000 CISWI RULE AND THE PROPOSED MACT FLOOR LIMITS

[Based on the primary proposed definition of solid waste in the Solid Waste Definition Rule]

Pollutant (units) [1]	Incinerators (2000 CISWI limit)	Proposed CISWI subcategories				
		Incinerators	Energy recovery units	Waste-burning kilns	Burn-off ovens	Small, remote incinerators
HCl (ppmv)	62	29	1.5	1.5	130	150
CO (ppmv)	157	2.2	150	710	80	78
Pb (mg/dscm)	0.04	0.0026	0.002	0.0027	0.041	1.4
Cd (mg/dscm)	0.004	0.0013	0.00041	0.0003	0.0045	0.26
Hg (mg/dscm)	0.47	0.0028	0.00096	0.024	0.014	0.0029
PM, filterable (mg/dscm)	70	13	9.2	60	33	240
dioxin, furans, total (ng/dscm)	(no limit)	0.031	0.75	2.1	310	1,600
dioxin, furans, TEQ (ng/dscm)	0.41	0.0025	0.059	0.17	25	130
NO_X (ppmv)	388	34	130	1,100	120	210
SO_2 (ppmv)	20	2.5	4.1	410	11	44
Opacity (%)	10	1	1	4	2	13

[1] All emission limits are measured at 7% oxygen.
ppmv = parts per million by volume.
mg/dscm = milligrams per dry standard cubic meter.
ng/dscm = nanograms per dry standard cubic meter.

After establishing the MACT floors for each subcategory and pollutant, EPA also assessed options more stringent than the MACT floors. For reasons described in the rationale section (IV) of the preamble, we are not proposing limits more stringent than the MACT floor. However, we are proposing to amend the requirements to qualify for reduced testing and, thereby, we are providing an incentive for owners or operators to optimize a unit's carbon injection system and other operating parameters to further reduce both mercury and dioxin/furan emissions.

As stated above, the approach for new sources was similar to that used with the existing sources, except the best performing unit's data within a subcategory was used to calculate the MACT floor emission limit instead of the average of the best performing 12 percent of units. In summary, the approach ranks individual CISWI units based on actual performance and establishes MACT floors based on the best performing source for each pollutant and subcategory, with an appropriate accounting for emissions variability. The new source MACT floor emission limits for each CISWI subcategory are shown in Table 2 of this preamble.

TABLE 2—COMPARISON OF NEW SOURCE MACT FLOOR LIMITS FOR 2000 CISWI RULE AND THE PROPOSED MACT FLOOR LIMITS

[Based on the primary definition of solid waste in the Solid Waste Definition Rule]

Pollutant (units) [1]	Incinerators (2000 limit)	Proposed CISWI subcategories				
		Incinerators	Energy recovery units	Waste-burning kilns	Burn-off ovens	Small, remote incinerators
HCl (ppmv)	62	0.074	0.17	1.5	18	150
CO (ppmv)	157	1.4	3.0	36	74	4.0
Pb (mg/dscm)	0.04	0.0013	0.0012	0.00078	0.029	1.4
Cd (mg/dscm)	0.004	0.00066	0.00012	0.00030	0.0032	0.057
Hg (mg/dscm)	0.47	0.00013	0.00013	0.024	0.0033	0.0013
PM, filterable (mg/dscm)	70	0.0077	4.4	1.8	28	240
dioxin, furans, total (ng/dscm)	(no limit)	0.0093	0.034	0.00035	0.011	1,200
dioxin, furans, TEQ (ng/dscm)	0.41	0.00073	0.0027	0.000028	0.00086	94
NO_X (ppmv)	388	19	75	140	16	210
SO_2 (ppmv)	20	1.5	4.1	3.6	1.5	43
Opacity (%)	10	1	1	1	2	13

[1] All emission limits are measured at 7 percent oxygen.

3. How is the solid waste definition addressed in this proposed rule?

EPA is proposing to define the non-hazardous secondary materials that are solid waste in a parallel notice under RCRA and the RCRA proposal also identifies an "alternative approach" for consideration and comment. The concurrently proposed RCRA solid waste definition is integral in defining the CISWI source category. As stated above, the emission limits presented in Tables 1 and 2 of this preamble are based on subcategories established considering sources that are CISWI units under the "proposed approach" for defining when non-hazardous secondary materials are solid waste, as discussed in a parallel proposal under RCRA. As stated above, the "alternative approach" identified for consideration and comment in the RCRA notice would result in a different population of units being covered by the standards for two of the CISWI subcategories. We calculated MACT floors using emission rates for units that would be CISWI units under the "alternative approach" (*i.e.,* for units in the energy recovery units and waste-burning kilns

subcategories) and the MACT standard setting procedures previously described.

Table 3 of this preamble reflects the potential MACT floor limits for the subcategories (*i.e.,* energy recovery unit and waste-burning kiln) that would be affected considering the "alternative approach" for defining solid waste. The MACT floor limits for the remaining three subcategories would not be impacted by the "alternative approach" and are reflected in Tables 1 and 2 of this preamble.

TABLE 3—POTENTIAL NEW AND EXISTING MACT FLOOR LIMITS FOR THE ENERGY RECOVERY UNITS AND WASTE-BURNING KILN SUBCATEGORIES USING THE "ALTERNATIVE APPROACH" UNDER CONSIDERATION AND COMMENT IN THE CONCURRENTLY PROPOSED RCRA RULE

Pollutant (units) [1]	Proposed MACT floor for existing units		Proposed MACT floor for new units	
	Energy recovery units	Waste-burning kilns	Energy recovery units	Waste-burning kilns
HCl (ppmv)	30	3.6	0.036	3.6
CO (ppmv)	290	760	3	36
Pb (mg/dscm)	0.15	0.0061	0.000023	0.00078
Cd (mg/dscm)	0.013	0.00070	0.0000011	0.00070
Hg (mg/dscm)	0.0085	0.03	0.00013	0.00081
PM, filterable (mg/dscm)	69	71	3.4	1.8
dioxin, furans, total (ng/dscm)	95	2.2	0.0017	0.00035
dioxin, furans, TEQ (ng/dscm)	7.5	0.18	0.00014	0.000028
NO_X (ppmv)	440	1,100	63	140
SO_2 (ppmv)	1,500	410	0.040	3.6
Opacity (%)	1	4	1	1

[1] All emission limits are measured at 7 percent oxygen.

B. Proposed CAA Section 129(a)(5) Five-Year Review Response

Section 129(a)(5) of the CAA requires EPA to conduct a review of the standards at five-year intervals and, in accordance with CAA Sections 129 and 111, revise the standards. We do not interpret CAA Section 129(a)(5), together with CAA Section 111, as requiring EPA to recalculate MACT floors in connection with this periodic review. See, *e.g.,* 71 FR 27324, 27327–28 (May 10, 2006) "Standards of Performance for New Stationary Sources and Emission Guidelines for Existing Sources: Large Municipal Waste Combustors; Final Rule"; see also, *NRDC and LEAN* v. *EPA,* 529 F.3d 1077, 1083–84 (D.C. Cir. 2008) (upholding EPA's interpretation that the periodic review requirement in CAA Section 112(d)(6) does not impose an obligation to recalculate MACT floors).

Rather, in conducting such periodic reviews, EPA attempts to assess the performance of and variability associated with control measures affecting emissions performance at sources in the subject source category (including the installed emissions control equipment), along with recent developments in practices, processes and control technologies, and determines whether it is appropriate to revise the standards. This is the same general approach taken by EPA in periodically reviewing CAA Section 111 standards, as CAA Section 111 contains a similar review and revise provision. Specifically, CAA Section 111(b)(1)(B) requires EPA, except in specified circumstances, to review NSPS promulgated under CAA Section 111 every eight years and to revise the standards if EPA determines that it is "appropriate" to do so, 42 U.S.C. 7411(b)(1)(B). In light of the explicit reference in CAA Section 129(a)(5) to Section 111, which contains direct guidance on how to review and revise standards previously promulgated, EPA reasonably interprets CAA Section 129(a)(5) to provide that EPA must similarly review and, if appropriate, revise CAA Section 129 standards.

Section 129 provides guidance on the criteria to be used in determining whether it is appropriate to revise a CAA Section 129 standard. Section 129(a)(3) states that standards under CAA Sections 111 and 129 "shall be based on methods and technologies for removal or destruction of pollutants before, during and after combustion." It can be reasonably inferred from the reference to "technologies" that EPA is to consider advances in technology, both as to their effectiveness and their costs, as well as the availability of new technologies, in determining whether it is "appropriate" to revise a CAA Section 129 standard. This inference is further supported by the fact that the standards under review are based, in part, on an assessment of the performance of control technologies currently being used by sources in a category or subcategory.

This approach is also consistent with the approach used in establishing and updating NSPS under CAA Section 111. Consistent with the definition of "standard of performance" in CAA Section 111(a)(1), standards of performance promulgated under CAA Section 111 are based on "the best system of emission reductions" which generally equates to some type of control technology. Where EPA determines that it is "appropriate" to revise CAA Section 111 standards, CAA Section 111(b)(1)(B) directs that this be done "following the procedure required by this subsection for promulgation of such standards." In updating CAA Section 111 standards in accordance with CAA Section 111(b)(1)(B), EPA has consistently taken the approach of evaluating advances in existing control technologies, both as to performance and cost, as well as the availability of new technologies and then, on the basis of this evaluation, determined whether it is appropriate to revise the standard. *See,* for example, 71 FR 9866 (Feb. 27, 2006) (updating the boilers NSPS) and 71 FR 38482 (July 6, 2006) (updating the stationary combustion turbines NSPS). In these reviews, EPA takes into account, among other things, the currently installed equipment and its performance and operational variability. As appropriate, we also consider new technologies and control measures that have been demonstrated to reliably control emissions from the source category.

The approach is similar to the one that Congress spelled out in CAA Section 112(d)(6), which is also entitled

"Review and revision." Section 112(d)(6) directs EPA to every eight years "review, and revise as necessary (taking into account developments in practices, processes and control technologies)" emission standards promulgated pursuant to CAA Section 112. There are a number of significant similarities between what is required under CAA Section 129, which addresses emissions of hazardous air pollutants (HAP) and other pollutants from solid waste incineration units, and CAA Section 112, which addresses HAP emissions generally. For example, under both CAA Section 112(d)(3) and CAA Section 129(a)(2) initial standards applicable to existing sources "shall not be less stringent than the average emissions limitation achieved by the best performing 12 percent of units in the category." Also, as stated above, both sections require that standards be reviewed at specified intervals of time. Finally, both sections contain a provision addressing "residual risk" (CAA Sections 112(f) and 129(h)(3)). As a result, EPA believes that CAA Section 112(d)(6) is relevant in ascertaining Congress' intent regarding how EPA is to proceed in implementing CAA Section 129(a)(5).

Like its counterpart CAA Section 112(d)(6), Section 129(a)(5) does not state that EPA must conduct a MACT floor analysis every five years when reviewing standards promulgated under CAA Sections 129(a)(2) and 111. Had Congress intended EPA to conduct a new floor analysis every five years, it would have said so expressly by directly incorporating such requirements into CAA Section 129(a)(5), for example, by referring directly to CAA Section 129(a)(2), rather than just to "this section" and CAA Section 111. It did not do so, however, and, in fact, CAA Section 129 encompasses more than just MACT standards under CAA Section 129(a)(2)—it also includes risk-based standards under CAA Section 129(h)(3), which are not determined by an additional MACT analysis. Reading CAA Section 129(a)(5) to require recalculation of the MACT floor would be both inconsistent with Congress' express direction that EPA should revise CAA Section 129 standards in accordance with CAA Section 111, which plainly provides that such revision should occur only if we determine that it is "appropriate" to do so. It would also result in effectively reading the reference to CAA Section 111 out of the CAA, a circumstance that Congress could not have intended. Required recalculation of floors would completely eviscerate EPA's ability to base revisions to CAA Section 129 standards on a determination that it is "appropriate" to revise such standards, as EPA's only discretion would be in deciding whether to establish a standard that is more stringent than the recalculated floor. EPA believes that depriving the Agency of any meaningful discretion in this manner is at odds with what Congress intended.

Further, required recalculation of floors would have the inexorable effect of driving existing sources to the level of performance exhibited by new sources on a five-year cycle, a result that is unprecedented and that should not be presumed to have been intended by Congress in the absence of a clear statement to that effect. There is no such clear statement. It is reasonable to assume that if the floor must be recalculated on a five-year cycle, some, if not most or all, of the sources that form the basis for the floor calculation, will be sources that were previously subject to standards applicable to new sources. As a result, over time, existing sources which had not made any changes in their operations, would eventually be subject to essentially the same level of regulation as new sources. Such a result would be unprecedented, particularly in the context of a standard that is established under both CAA Sections 129 and 111. Under CAA Section 111, an existing source only becomes a new source and thus subject to a new source standard when it is either modified (CAA Section 111(a)(2)) or reconstructed (40 CFR 60.15). Given this context, it is not reasonable to assume that Congress intended for existing sources subject to CAA Section 129 standards to be treated as new sources over time where their circumstances have not changed.

We believe that a reasonable interpretation of CAA Section 129(a)(5) is that Congress preserved EPA's discretion in reviewing CAA Section 129 standards to revise them when the EPA determines it is "appropriate" to do so and that the Court's recent ruling regarding CAA Section 112(d)(6) supports this view (*see NRDC and LEAN* v. *EPA,* 529 F.3d 1077, 1084 (DC Cir. 2008). In that case, petitioners had "argued that EPA was obliged to completely recalculate the maximum achievable control technology—in other words, to start from scratch." *NRDC and LEAN,* 529 F.3d at 1084. The Court held: "We do not think the words 'review, and revise as necessary' can be construed reasonably as imposing any such obligation." The Court's ruling in *NRDC and LEAN* is consistent with our interpretation of CAA Section 129(a)(5) as providing a broad range of discretion in terms of whether to revise MACT standards adopted under CAA Sections 129(a)(2) and 111.

C. EPA's Approach in Conducting the Five-Year Review

This action responds to the vacatur and remand of the CISWI Definition Rule and the voluntary remand of the 2000 CISWI NSPS and EG, and, in this response, EPA is proposing new standards based on a MACT methodology that is consistent with the CAA and District of Columbia Circuit Court precedent. The MACT levels proposed herein reflect floor levels determined by actual current emissions data from CISWI units, and, therefore, reflect the current performance of the best performing unit or units that will be subject to the CISWI standards. Consequently, we believe that our obligation to conduct a five-year review based on implementation of the 2000 CISWI rule will also be fulfilled upon finalization of the CISWI standards. Our conclusion is supported by the fact that the revised MACT standards included in this proposed remand response are based on the available performance data for the currently operating CISWI units, including those units that are subject to the 2000 CISWI rule and those units that will be subject to the CISWI standards for the first time based on the proposed Solid Waste Definition rule under RCRA. In establishing MACT floors based on currently available emissions information, we address the technology review's goals of assessing the performance efficiency of the installed equipment and ensuring that the emission limits reflect the performance of the technologies required by the MACT standards. In addition, in establishing the proposed standards, we considered whether new technologies and processes and improvements in practices have been demonstrated at sources subject to the 2000 CISWI rule and at sources that will be subject to these proposed standards for the first time based on the proposed definition of solid waste. Accordingly, the remand response in this proposed action fulfills EPA's obligations regarding the five-year review of the CISWI standards.

D. Other Proposed Amendments

This proposed action makes additional changes to the 2000 CISWI rule, including changes to the units excluded from regulation under the 2000 CISWI rule; the removal of the exemption for periods of startup, shutdown and malfunction; changes to the testing, monitoring and reporting requirements; and changes to the

electronic data submittal requirements. A summary of these changes follows.

1. Definitions and Units Excluded From Regulation

We are revising the definition of CISWI unit to reflect the Court decision that all units burning solid waste as defined under RCRA are to be covered by regulation under CAA Section 129. We are also adding a definition of "solid waste incineration unit" and removing the definition of "commercial and industrial waste". We also included for the first time definitions of the five subcategories of CISWI units that will be regulated under the proposed rules.

The 2000 CISWI rule excluded from regulation combustion units at commercial or industrial facilities that recovered energy for a useful purpose, and also excluded multiple other types of units that may combust solid waste including: Pathological waste incinerators; agricultural waste incinerators; incinerators regulated by the CAA Section 129 municipal waste combustor (MWC) or HMIWI standards; incinerators with a capacity less than 35 tons per day that combust more than 30 percent MSW; qualifying small power producers; qualifying cogeneration units; materials recovery units; air curtain incinerators combusting "clean wood" waste; cyclonic barrel burners; rack, part and drum reclamation units; cement kilns; sewage sludge incinerators (SSI); chemical recovery units; and laboratory analysis units.

Qualifying small power producers, qualifying cogeneration units and metals recovery units are expressly exempt from coverage pursuant to CAA exclusions from the definition of "solid waste incineration unit" set forth in Section 129(g)(1). Units that are required to have a permit under section 3005 or the Solid Waste Disposal Act (*i.e.,* hazardous waste combustion units) are also exempt from Section 129 rules per CAA Section 129(g)(1). Air curtain incinerators at commercial or industrial facilities combusting "clean wood" waste are also excluded from the definition of solid waste incineration unit set forth in CAA Section 129(g)(1), but that section provides that such units must comply with opacity limits.

Solid waste incineration units that are included within the scope of other CAA Section 129 categories include MWCs, pathological waste incinerators (EPA intends to regulate these units under other solid waste incineration (OSWI) standards), SSI (EPA currently intends to issue a regulation setting emission standards for these units by December 16, 2010), and HMIWI, and these solid waste incineration units will remain exempt from the CISWI standards. All other solid waste incineration units at commercial and industrial facilities would be subject to the proposed CISWI standards. Accordingly, the proposed revisions to the CISWI rules would remove the exemptions for: Agricultural waste incinerators; cyclonic barrel burners; cement kilns; rack, part and drum reclamation units (*i.e.* burn-off ovens); chemical recovery units; and laboratory analysis units. As stated above, we are proposing to create subcategories for waste-burning kilns, energy recovery units and burn-off ovens and subject them to this proposed rule in light of the CISWI Definitions Rule vacatur. We note that other Section 129 standards may contain an exemption for cement kilns. Those exemptions do not excuse waste burning kilns from compliance with these proposed standards. As those other Section 129 rules are amended, we will clarify that cement kilns that meet the definition of waste-burning kiln and other CISWI units that may be expressly exempt from those standards are subject to CISWI standards if they combust solid waste.

CISWI units burning agricultural materials that meet the definition of solid waste would be part of the appropriate standards under this proposed rule. If the unit recovers energy, it would be subject to the CISWI energy recovery unit subcategory, and our inventory includes one such unit. If the unit does not recover energy, it would be included in either the incinerators subcategory or the small, remote incinerators subcategory. We are not aware of any circumstances in which waste-burning kilns or burn off ovens would combust agricultural materials. Cyclonic burn barrels, which may be used to combust agricultural materials, would be included in either the incinerators subcategory or the small remote incinerators subcategory.

2. Performance Testing and Monitoring Amendments

The proposed amendments would require all CISWI units to demonstrate initial compliance with the revised emission limits. The proposed amendments would require, for existing CISWI units, annual inspections of scrubbers, fabric filters and other air pollution control devices that are used to meet the emission limits. In addition, a Method 22 of appendix A–7 visible emissions test of the ash handling operations is required to be conducted during the annual compliance test for all subcategories except waste-burning kilns, which do not have ash handling systems. Furthermore, for any existing CISWI unit that operates a fabric filter air pollution control device, we are proposing that a bag leak detection system be installed to monitor the device. The proposed amendments continue to require parametric monitoring of all other add-on air pollution control devices, such as wet scrubbers and activated carbon injection. CISWI units that install SNCR technology to reduce NO_X emissions would be required to monitor the reagent (*e.g.,* ammonia or urea) injection rate and secondary chamber temperature (if applicable to the CISWI unit).

The proposed amendments would also require subcategory-specific monitoring requirements in addition to the aforementioned inspection, bag leak detection and parametric monitoring requirements applicable to all CISWI units. Existing incinerators, burn-off ovens and small, remote incinerators would have annual emissions testing for opacity, HCl and PM. Existing kilns would monitor Hg emissions using a Hg continuous emissions monitoring systems (CEMS) and would perform annual testing for CO, NO_X, SO_2, PM, HCl and opacity. Existing energy recovery units would monitor CO using a CO CEMS. We seek comment on the extent to which existing units in subcategories other than energy recovery should be required to use CO CEMS. Annual performance testing for CO, NO_X, SO_2, PM, HCl, dioxins/furans and opacity is also required for these units. The proposed amendments provide reduced annual testing requirements for PM, HCl and opacity when testing results are shown to be well below the limits. If the energy recovery unit has a design capacity less than 250 MMBtu/hr and is not equipped with a wet scrubber control device, then a continuous opacity monitor would be required or, as an alternative, a PM CEMS could be employed (see below). If the energy recovery unit has a design capacity greater than 250 MMBtu/hr, the proposed requirements would require monitoring of PM emissions using a PM CEMS. We seek comment on the extent to which subcategories other than energy recovery units should be required to use PM CEMS.

For new CISWI units, the proposed amendments would require the same monitoring requirements proposed for existing units, but would also require CO CEMS for all subcategories.

For all subcategories of existing CISWI units, use of CO CEMS would be an approved alternative and specific language with requirements for CO CEMS is included in the proposed amendments. For new and existing

CISWI units, use of PM, NO_X, SO_2, HCl, multi-metals and Hg CEMS and integrated sorbent trap Hg monitoring and dioxin monitoring (continuous sampling with periodic sample analysis) also would be approved alternatives and specific language for those alternatives is included in the proposed amendments.

3. Electronic Data Submittal

The EPA must have performance test data to conduct effective reviews of CAA Section 112 and 129 standards, as well as for many other purposes including compliance determinations, emissions factor development and annual emissions rate determinations. In conducting these required reviews, we have found it ineffective and time consuming not only for us but also for regulatory agencies and source owners and operators to locate, collect and submit emissions test data because of varied locations for data storage and varied data storage methods. One improvement that has occurred in recent years is the availability of stack test reports in electronic format as a replacement for cumbersome paper copies.

In this action, we are taking a step to improve data accessibility. Owners and operators of CISWI units will be required to submit to an EPA electronic database an electronic copy of reports of certain performance tests required under this rule. Data entry will be through an electronic emissions test report structure called the Electronic Reporting Tool (ERT) that will be used by the staff as part of the emissions testing project. The ERT was developed with input from stack testing companies who generally collect and compile performance test data electronically and offices within state and local agencies which perform field test assessments. The ERT is currently available, and access to direct data submittal to EPA's electronic emissions database (WebFIRE) will become available by December 31, 2011.

The requirement to submit source test data electronically to EPA will not require any additional performance testing and will apply to those performance tests conducted using test methods that are supported by ERT. The ERT contains a specific electronic data entry form for most of the commonly used EPA reference methods. The Web site listed below contains a listing of the pollutants and test methods supported by ERT. In addition, when a facility submits performance test data to WebFIRE, there will be no additional requirements for emissions test data compilation. Moreover, we believe industry will benefit from development of improved emissions factors, fewer follow-up information requests and better regulation development as discussed below. The information to be reported is already required for the existing test methods and is necessary to evaluate the conformance to the test method.

One major advantage of submitting source test data through the ERT is that it provides a standardized method to compile and store much of the documentation required to be reported by this rule while clearly stating what testing information we require. Another important benefit of submitting these data to EPA at the time the source test is conducted is that it will substantially reduce the effort involved in data collection activities in the future. Specifically, because EPA would already have data for this source category as a result of the electronic reporting provisions described here, there would likely be fewer or less substantial data collection requests (*e.g.,* CAA Section 114 letters) in the future for this source category. This results in a reduced burden on both affected facilities (in terms of reduced manpower to respond to data collection requests) and EPA (in terms of preparing and distributing data collection requests).

State/local/tribal agencies may also benefit in that their review may be more streamlined and accurate as the states will not have to re-enter the data to assess the calculations and verify the data entry. Finally, another benefit of submitting these data to WebFIRE electronically is that these data will improve greatly the overall quality of the existing and new emissions factors by supplementing the pool of emissions test data upon which the emissions factor is based and by ensuring that data are more representative of current industry operational procedures. A common complaint we hear from industry and regulators is that emissions factors are outdated or not representative of a particular source category. Receiving and incorporating data for most performance tests will ensure that emissions factors, when updated, represent accurately the most current operational practices. In summary, receiving test data already collected for other purposes and using them in the emissions factors development program will save industry, state/local/tribal agencies and EPA time and money and work to improve the quality of emissions inventories and related regulatory decisions.

As mentioned earlier, the electronic database that will be used is EPA's WebFIRE, which is a Web site accessible through EPA's TTN. The WebFIRE Web site was constructed to store emissions test data for use in developing emissions factors. A description of the WebFIRE database can be found at *http://cfpub.epa.gov/oarweb/index.cfm?action=fire.main.* The ERT will be able to transmit the electronic report through EPA's Central Data Exchange (CDX) network for storage in the WebFIRE database. Although ERT is not the only electronic interface that can be used to submit source test data to the CDX for entry into WebFIRE, it makes submittal of data very straightforward and easy. A description of the ERT can be found at *http://www.epa.gov/ttn/chief/ert/ert_tool.html.*

4. Changes to Startup, Shutdown and Malfunction Provisions

The 2000 CISWI standards did not apply during periods of startup, shutdown and malfunction. The proposed rule would revise the 2000 CISWI rule such that the standards would apply at all times, including during startup, shutdown or malfunction events. As further explained in Section IV.E.4 of this preamble, the revision is the result of a court decision that invalidated certain regulations related to startup, shutdown and malfunction in the General Provisions of 40 CFR part 63. The full rationale for these decisions is presented in Section IV.E.3 of this preamble.

E. Proposed State Plan Implementation Schedule for Existing CISWI

Under the proposed amendments to the EG and consistent with CAA Section 129, revised state plans containing the revised existing source emission limits and other requirements in the proposed amendments would be due within one year after promulgation of the amendments. That is, states would have to submit revised plans to EPA one year after the date on which EPA promulgates revised standards.

The proposed amendments to the EG would then allow existing CISWI to demonstrate compliance with the amended standards as expeditiously as practicable after approval of a state plan, but no later than three years from the date of approval of a state plan or five years after promulgation of the revised standards, whichever is earlier. Consistent with CAA Section 129, EPA expects states to require compliance as expeditiously as practicable. However, because we believe that many CISWI units will find it necessary to retrofit existing emission control equipment and/or install additional emission

control equipment in order to meet the proposed revised limits, EPA anticipates that states may choose to provide the three year compliance period allowed by CAA Section 129(f)(2).

In revising the standards in a state plan, a state would have two options. First, it could include both the 2000 CISWI standards and the new standards in its revised state plan, which would allow a phased approach in applying the new limits. That is, the state plan would make it clear that the standards in the 2000 CISWI rule remain in force for units in the incinerators subcategory and apply until the date the revised existing source standards are effective (as defined in the state plan).[5] States whose existing CISWI units in the incinerators subcategory do not need to improve their performance to meet the revised standards may want to consider a second approach where the state would replace the 2000 CISWI rule standards with the standards in the final rule, follow the procedures in 40 CFR part 60, subpart B, and submit a revised state plan to EPA for approval. If the revised state plan contains only the revised standards (*i.e.,* the 2000 CISWI rule standards are not retained), then the revised standards must become effective immediately for those units in the incinerators subcategory that are subject to the 2000 CISWI rule since the 2000 CISWI rule standards would be removed from the state plan.

EPA will revise the existing Federal plan to incorporate any changes to existing source emission limits and other requirements that EPA ultimately promulgates. The Federal plan applies to CISWI units in any state without an approved state plan. The proposed amendments to the EG would allow existing CISWI units subject to the Federal plan up to five years after promulgation of the revised standards to demonstrate compliance with the amended standards, as required by CAA Section 129(b)(3).

F. Proposed Changes To the Applicability Date of the 2000 NSPS and EG

CISWI units in the incinerators subcategory would be treated differently under the amended standards, as proposed, than they were under the 2000 CISWI rule in terms of whether they are "existing" or "new" sources. Consistent with the CAA Section 129 definition of "new" sources, there would be new dates defining what units are "new" sources. Units in the incinerators subcategory that are currently subject to the NSPS would become "existing" sources under the proposed amended standards and would be required to meet the revised EG for the incinerators subcategory by the applicable compliance date for the revised guidelines. However, those units would continue to be NSPS units subject to the 2000 CISWI rule until they become "existing" sources under the amended standards. CISWI units in the five subcategories that commence construction after the date of this proposal, or for which a modification is commenced on or after the date six months after promulgation of the amended standards, would be "new" units subject to more stringent NSPS emission limits. Units for which construction or modification is commenced prior to those dates would be existing units subject to the proposed EG, except that units in the incinerators subcategory would remain subject to the 2000 CISWI rule until the compliance date of the proposed CISWI EG as discussed above. CISWI solid waste incineration units in the subcategories other than the incinerators subcategory will not in any case be subject to the standards in the 2000 CISWI rule.

Thus, under these proposed amendments, units in the incinerators subcategory that commenced construction after November 30, 1999, and on or before June 4, 2010, or that are reconstructed or modified prior to the date six months after promulgation of any revised final standards, would be subject to the 2000 CISWI NSPS until the applicable compliance date for the revised EG, at which time those units would become "existing" sources. Similarly, units in the incinerators subcategory subject to the EG under the 2000 CISWI rule would need to meet the revised EG by the applicable compliance date for the revised guidelines. CISWI units that commence construction after June 4, 2010 or that are reconstructed or modified six months or more after the date of promulgation of any revised standards would have to meet the revised NSPS emission limits being added to the subpart CCCC NSPS within six months after the promulgation date of the amendments or upon startup, whichever is later.

IV. Rationale

A. Rationale for the Proposed Response To the Remand and the Proposed CAA Section 129(a)(5) Five-Year Review Response

1. Rationale for the Proposed Response To the Remand Pursuant to CAA Section 129(a)(2)

The proposed revised standards represent EPA's position concerning what is necessary to satisfy our initial duties under CAA Section 129(a)(2) to have set MACT limits for CISWI and we are establishing the MACT standards in response to the voluntary remand that EPA requested in 2001 and the Court's remand of the CISWI Definitions Rule. As explained further below, we are subcategorizing CISWI units for the first time in light of the new population of units subject to the rule. Specifically, we are proposing a total of five subcategories. Below, we propose MACT standards for each subcategory of new and existing CISWI units.

See sections II.A. and III.B above for a detailed discussion of EPA's authority to establish CAA Section 129(a)(2) standards for CISWI units.

2. Proposed CAA Section 129(a)(5) Five-Year Review Response

As stated above, EPA interprets CAA Section 129(a)(5) to provide EPA with broad discretion to revise MACT standards for incinerators. As we explained, we do not interpret CAA Section 129(a)(5), as requiring that EPA in each round of review, recalculate MACT floors, and we regard the Court's recent ruling in *NRDC and LEAN* v. *EPA,* in which the Court held that the similar review requirement in CAA Section 112(d)(6) does not require a MACT floor recalculation, as supporting our view. This action does not reflect an independent MACT floor reassessment performed under CAA Section 129(a)(5). However, since these proposed standards do reflect the emissions levels currently achieved in practice by the best performing CISWI units and we have no other information that would cause us to reach different conclusions were a CAA Section 129(a)(5) review to be conducted in isolation, we believe that this rulemaking responding to the Court's remand will necessarily discharge our duty under CAA Section 129(a)(5) to review and revise the current standards.

In performing future five-year reviews of the CISWI standards, we do not intend to recalculate new MACT floors, but will instead propose to revise the emission limits consistent with our interpretation as presented above in

[5] All sources currently subject to the 2000 CISWI EG or NSPS will become existing sources in the incinerators subcategory once the final revised CISWI standards are in place. See section III.F below.

section III.B. We believe this approach reflects the most reasonable interpretation of the review requirement of CAA Section 129(a)(5), and is consistent with how we have interpreted the similar review requirement of CAA Section 112(d)(6), regarding MACT standards promulgated under CAA Section 112.

This action's proposed remand response fulfills our obligations regarding the five-year review of the CISWI standards because the revised MACT floor determinations and emission limits associated with the remand response are based on performance data for currently operating CISWI units and accounts for all non-technology factors that affect CISWI unit performance. The proposed remand response also addresses whether new technologies and processes and improvements in practices have been demonstrated at CISWI units subject to the 2000 CISWI rule. Furthermore, this action also proposes monitoring requirements for control devices that may be used to comply with the proposed standards by units in the subcategories that were not subject to the 2000 CISWI rule, but would be subject to these proposed standards. These controls include activated carbon injection, selective non-catalytic reduction and electrostatic precipitators. Our information indicates that these technologies are currently being used by some of the units that would be subject to this proposal, or have been applied to units in similar source categories, such as municipal waste combustors. We also reviewed CEMS requirements being proposed in standards for the non-waste burning counterparts to the waste-burning kiln and energy recovery unit subcategories, and believe that these can be applied to similar units that would be regulated under the proposed CISWI standards.

B. Rationale for Proposed Subcategories

As discussed earlier in section III.A.2. of this preamble, the population of existing units that would be subject to this proposed regulation has been expanded from the 2000 CISWI rule. The combustion survey Information Collection Request (ICR) responses show that our population of 176 CISWI units now includes combustion units with various fundamental differences in relation to units that were regulated as CISWI in the 2000 CISWI rule. We are proposing to subcategorize CISWI units based on technical and other differences in the processes, such as combustor design, draft type and availability of utilities. These proposed subcategories for CISWI have been established based on fundamental differences in the types and sizes of units that will be subject to the standards.

Incinerators: Incinerators, which are the units currently regulated by the 2000 CISWI rule, are used to dispose of solid waste materials, and emissions are a function of the types of materials burned. Incinerators are designed without integral heat recovery (but may include waste heat recovery). While there are different designs, they all serve the same purpose: Reduction in the volume of solid waste materials. Incinerators can be operated on a batch or continuous basis. The same types of add-on controls, including fabric filters, wet scrubbers, SNCR and activated carbon injection, can be applied to most incinerators. Although the composition of the materials combusted is highly variable and is a key factor in the profile of emissions, we determined it was not appropriate to further subcategorize incinerators because the sources in this category are sufficiently similar such that the incinerators can achieve the same level of performance for the nine regulated pollutants.

Energy-recovery units: Energy recovery units combust solid waste materials as a percentage of their fuel mixture and are designed to recover thermal energy in the form of steam or hot water. Energy recovery units include units that would be considered boilers and process heaters if they did not combust solid waste. Energy recovery units are generally larger than incinerators. They typically fire a mixture of solid waste and other fuels, whereas incinerators burn predominantly solid waste, although sometimes a small amount of supplemental fuel is fired in an incinerator to maintain combustion temperature. Energy recovery units are also different from incinerators in terms of how the fuel is fed into the combustion chamber, the combustion chamber design (which typically includes integral heat recovery) and other operational characteristics. These differences can result in emission profiles for energy recovery units that are different from incinerators but similar to boilers. Combustion of waste materials in these units impacts the emission profile to some degree, although emissions from these units often resemble emissions from boilers that combust traditional fuels.

Waste-burning kilns: Waste-burning kilns are fundamentally different than any other unit being regulated under CISWI. Kilns of all types are physically larger than an incinerator with a comparable heat input. Kiln design and operation are also different. For example, the design is typically a rotating cylindrical kiln with a fuel burner on one end and raw materials being fed in the other (cold) end. Fuel (particularly solids such as tires) may also in some cases be fed at a mid-kiln point. Some kilns also have a large preheater tower with a precalciner that is an additional firing point for both fossil and waste fuels. The temperature profile of kilns is critical in order to produce a saleable product. Another key distinction is that for cement kilns, the source of most of the pollutants is typically the raw materials, not the fuels, and emissions from the raw materials and the solid wastes and fuels are comingled and emitted together. As a result, waste-burning kilns have a very different emissions profile than other CISWI subcategories and that difference can influence the design of applicable controls.

Burn-off ovens: These units typically are very small (<1 MMBtu/hr), batch-operated, combustion units that are used to clean residual materials off of various metal parts, which are then reused. The amount of waste combusted in these units is generally small (pounds per year in some cases) and the configuration of the stacks that serve these units precludes the use of some EPA test methods for measuring emissions and could affect the ability to install certain control devices.

Small, remote, incinerators: These are batch-operated units that combust less than one ton of waste per day and are farther than 50 miles driving distance to the closest MSW landfill. To the extent that these are located in Alaska, a major difference in these types of units is the inability to operate a wet scrubber in the northern climates and the lack of availability of wastewater handling and treatment utilities. We believe this would impact their ability to meet emission limits for pollutants controlled by wet scrubbers. In addition, because of the remote location, these units do not have lower-cost alternative waste disposal options (*i.e.,* landfills) nearby and emissions associated with transporting the solid waste could be significant.

C. Rationale for MACT Floor Emission Limits

EPA must consider available emissions test data to determine the MACT floor. We based the floor calculations on available emissions data.[6] We did receive some additional data earlier this year, but as noted above, due to the court-ordered

[6] In calculating the floors for this proposed rule, we included units combusting manure.

deadline, we did not have sufficient time to review and evaluate that data. We intend to review and evaluate the data submitted earlier this year and any data received during the comment period, and we intend to include those data in our final analysis, as appropriate.

For existing sources, we calculated the MACT floor for each subcategory of sources by ranking the emission test results from units within the subcategory from lowest emissions to highest emissions (for each pollutant) and then taking the numerical average of the test results from the best performing (lowest emitting) 12 percent of sources. That is, the overall 3-run test average values for each existing unit for each pollutant were compiled and ranked from lowest to highest to identify the best performing 12 percent of sources within the subcategory for each pollutant (*i.e.,* on a pollutant-by-pollutant basis).[7] Because the number of units in different subcategories may be different, the number of units that represent the best performing 12 percent of different subcategories may be different. Also, mathematically, the number of units that represent the best performing 12 percent of the units in a subcategory will not always be an integer. To ensure that each MACT standard is based on at least 12 percent of the units in a subcategory, EPA has determined that it is appropriate to always round up to the nearest integer when 12 percent of a given subcategory is not an integer. For example, if 12 percent of a subcategory is 4.1, the standards will be based on the best performing five units even though rounding conventions would normally lead to rounding down to four units. Another example from this proposal is in the incinerator subcategory, which includes 28 units. Twelve percent of 28 is 3.36 units and we established the standards based on the best performing four units.

Once the best 12 percent of units are identified for each source category and pollutant, the individual test run data for these units were compiled and a statistical analysis was conducted to calculate the average and account for variability and, thereby, determine the MACT floor emission limit. The first step in the statistical analysis includes a determination of whether the data used for each MACT floor calculation were normally or log-normally distributed, followed by calculation of the average and 99th percent upper limit (UL).[8] If the data were normally distributed (*e.g.,* similar to a typical bell curve), then the equation to calculate UL was applied to the data. If the data were not normally distributed (for example if the data were asymmetric or skewed to the right or left), then the type of distribution (*e.g.,* log-normal) was determined and a data transformation was performed to normalize the data prior to computing the UL. When the data distribution was found to be log-normal, the data were transformed by taking the natural log of the data prior to calculating the UL value. Two statistical measures, skewness and kurtosis, were examined to determine if the data were normally or log-normally distributed. Additional discussion of the distribution analysis and the data distributions used to develop each MACT floor limit are documented in the memorandum "MACT Floor Analysis for the Industrial and Commercial Solid Waste Incinerators Source Category" in the docket.

The 99th percent UL represents a value that 99 percent of the data in the MACT floor data population would fall below, and therefore, accounts for the run-to-run and test-to-test variability observed in the MACT floor data set. It was calculated by the following equation that is appropriate for small data sets:

$$UL = x + t(0.99,n) * s$$

Where:

x = average of the data.
t(0.99,n) = t-statistic.
n = number of data points in the population.
s = standard deviation.

A detailed discussion of the MACT floor methodology is presented in the memorandum "MACT Floor Analysis for the Industrial and Commercial Solid Waste Incinerators Source Category" in the docket. The calculated existing source UL values (which are based on the emissions data from the best performing 12 percent of sources and account for variability) were selected as the proposed MACT floor emission limits for the nine regulated pollutants in each subcategory. In establishing the limits, the UL values were rounded up to two significant figures. For example, a value of 1.42 would be rounded to 1.5 (as has been done for other CAA Section 129 rules) because a limit of 1.4 would be lower than the calculated MACT floor value.

The UL computation assumes that the data available represents the entire population of data from the best performing CISWI units used to establish the proposed standards. This statistical approach and use of the UL is consistent with the methodology used in the October 6, 2009, HMIWI rule (74 FR 51368).

The summary results of the UL analysis and the MACT floor emission limits for existing units are presented in Tables 4 through 6 of this preamble for each subcategory.

TABLE 4—SUMMARY OF MACT FLOOR RESULTS FOR EXISTING UNITS—PM, HG, CD AND PB

Subcategory	Parameter	PM (mg/dscm)	Hg (mg/dscm)	Cd (mg/dscm)	Pb (mg/dscm)
Incinerators	No. of sources in subcategory =	28	28	28	28
	No. in MACT floor =	4	4	4	4
	Avg of top 12%	4.01	0.000359	0.000362	0.00125
	99% UL of top% (test runs) =	12.76	0.00278	0.00124	0.00258
	Proposed Limit =	13	0.0028	0.0013	0.0026
Energy recovery units	No. of sources in subcategory =	40	40	40	40
	No. in MACT floor =	5	5	5	5
	Avg of top 12%	4.249	0.000053	0.000157	0.000967
	99% UL of top% (test runs) =	9.179	0.000960	0.000409	0.00197
	Proposed Limit =	9.2	0.00096	0.00041	0.002
Waste-burning kilns	No. of sources in subcategory =	53	53	53	53

[7] The pollutant-by-pollutant approach is the same approach used for other CAA Section 129 standards and the rationale for this approach can be found in the preamble for the final HMIWI NSPS and EG (74 FR 51368, 51380 (October 6, 2009)).

[8] The procedure is the same as used for the HMIWI rule (74 FR 51367, October 6, 2009). While the HMIWI preamble referred to this measure as the upper confidence limit (UCL), it used the same equation. In this proposal, we refer to the measure as the UL, which is a more appropriate statistical terminology for this calculation.

TABLE 4—SUMMARY OF MACT FLOOR RESULTS FOR EXISTING UNITS—PM, HG, CD AND PB—Continued

Subcategory	Parameter	PM (mg/dscm)	Hg (mg/dscm)	Cd (mg/dscm)	Pb (mg/dscm)
	No. in MACT floor =	7	7	7	7
	Avg of top 12%	5.36	0.003649	0.000112	0.00105
	99% UL of top% (test runs) =	59.97	0.0240	0.000293	0.00261
	Proposed Limit =	60	0.024	0.0003	0.0027
Burn-off ovens	No. of sources in subcategory =	36	36	36	36
	No. in MACT floor =	5	5	5	5
	Avg of top 12%	9.25	0.00267	0.00123	0.0125
	99% UL of top% (test runs) =	32.14	0.0135	0.00448	0.0408
	Proposed Limit =	33	0.014	0.0045	0.041
Small, remote incinerators	No. of sources in subcategory =	19	19	19	19
	No. in MACT floor =	3	3	3	3
	Avg of top 12%	102.93	0.0017	0.0589	0.5627
	99% UL of top% (test runs) =	238.85	0.00289	0.256	1.4012
	Proposed Limit =	240	0.0029	0.26	1.4

TABLE 5—SUMMARY OF MACT FLOOR RESULTS FOR EXISTING UNITS—HCL, NO_X AND SO_2

Subcategory	Parameter	HCl (ppmdv)	NO_X (ppmdv)	SO_2 (ppmdv)
Incinerators	No. of sources in subcategory =	28	28	28
	No. in MACT floor =	4	4	4
	Avg of top 12%	0.1812	14.7	0.73
	99% UL of top% (test runs) =	28.05	33.09	2.48
	Proposed Limit =	29	34	2.5
Energy recovery units	No. of sources in subcategory =	40	40	40
	No. in MACT floor =	5	5	5
	Avg of top 12%	0.2415	64.24	1.67
	99% UL of top% (test runs) =	1.42	124.55	4.01
	Proposed Limit =	1.5	130	4.1
Waste-burning kilns	No. of sources in subcategory =	53	53	53
	No. in MACT floor =	7	7	7
	Avg of top 12%	0.5503	525.24	34.05
	99% UL of top% (test runs) =	1.435	1,080.3	409.67
	Proposed Limit =	1.5	1,100	410
Burn-off ovens	No. of sources in subcategory =	36	36	36
	No. in MACT floor =	5	5	5
	Avg of top 12%	27.10	51.63	0.88
	99% UL of top% (test runs) =	124.8	110.23	10.48
	Proposed Limit =	130	120	11
Small, remote incinerators	No. of sources in subcategory =	19	19	19
	No. in MACT floor =	3	3	3
	Avg of top 12%	66.5	91.83	12.18
	99% UL of top% (test runs) =	143.7	207	43.35
	Proposed Limit =	150	210	44

TABLE 6—SUMMARY OF MACT FLOOR RESULTS FOR EXISTING UNITS—CO AND DIOXIN/FURANS

Subcategory	Parameter	CO (ppmdv)	Dioxin/Furan (total mass basis) (ng/dscm)	Dioxin/Furan (total TEQ basis) (ng/dscm) [a]
Incinerators	No. of sources in subcategory =	28	28	28
	No. in MACT floor =	4	4	4
	Avg of top 12%	0.860	0.0113	0.55877
	99% UL of top% (test runs) =	2.17	0.0304	27.75
	Proposed Limit =	2.2	0.031	0.0025
Energy recovery units	No. of sources in subcategory =	40	40	40
	No. in MACT floor =	5	5	5
	Avg of top 12%	39.096	0.09824	9.8831
	99% UL of top% (test runs) =	146.8	0.748	7431.9
	Proposed Limit =	150	0.75	0.059
Waste-burning kilns	No. of sources in subcategory =	53	53	53
	No. in MACT floor =	7	7	7
	Avg of top 12%	147.33	0.02958	0.000935
	99% UL of top% (test runs) =	701.18	2.03	7,959
	Proposed Limit =	710	2.1	0.17
Burn-off ovens	No. of sources in subcategory =	36	36	36
	No. in MACT floor =	5	5	5
	Avg of top 12%	28.58	0.0455	b

TABLE 6—SUMMARY OF MACT FLOOR RESULTS FOR EXISTING UNITS—CO AND DIOXIN/FURANS—Continued

Subcategory	Parameter	CO (ppmdv)	Dioxin/Furan (total mass basis) (ng/dscm)	Dioxin/Furan (total TEQ basis) (ng/dscm) [a]
	99% UL of top% (test runs) =	79.36	303.8	b
	Proposed Limit =	80	310	25
Small, remote incinerators	No. of sources in subcategory =	19	19	19
	No. in MACT floor =	3	3	3
	Avg of top 12%	17.42	473.4	b
	99% UL of top% (test runs) =	77.48	1,502	b
	Proposed Limit =	78	1,600	130

[a]—Dioxin/furan TEQ UL values often were greater than the total mass basis UL values, which would result in a TEQ limit greater than the total mass basis. Therefore, paired total mass basis/TEQ data were analyzed and found that TEQ is 0.078 times the amount of the total mass basis. The dioxin/furan TEQ limits were therefore calculated based on 0.078 times the total mass basis limit.
[b]—Dioxin/furan TEQ data were not reported for this subcategory.

Using the UL approach described above for the dioxins/furans TEQ data sometimes resulted in a UL that was greater than that calculated for the associated total mass basis dioxins/furans for the subcategory, due to comparatively large standard deviations of the TEQ data versus those of the total mass basis data set. Dioxins/furans TEQ values should correlate to the total mass basis value at a ratio of less than 1 (a 1-to-1 ratio is the theoretical maximum and would indicate that all the dioxins/furans emitted would consist of the 2,3,7,8-tetrachlorodibenzodioxin (TCDD) congener). We reviewed available data to see what the ratio was for test reports where the total mass and TEQ data were simultaneously reported. Because it is impossible for the same concentration data to be higher on a TEQ basis than a total mass basis, TEQ to total mass basis ratios greater than 1 were omitted. Ratios greater than 0.5 were also screened out of the paired data because EPA is unaware of any combustion units ever having a TEQ to total mass basis ratio as high as 0.5. After screening the paired data, the resulting ratios were on average 0.078 times that of the total mass basis. Therefore, to be consistent in establishing the dioxins/furans TEQ limits and to prevent any instances where the TEQ limit exceeds the associated total mass basis limit, we selected MACT floor limits based on the total mass basis limit multiplied by 0.078. EPA requests comment on this approach for establishing the dioxins/furans TEQ basis limits.

New source MACT floors are based on the best performing single source for each regulated pollutant, with an appropriate accounting for emissions variability. In other words, the best performing unit was identified by ranking the units from lowest to highest for each subcategory and pollutant and selecting the unit with the lowest 3-run test average emission test data for each pollutant. The UL was determined for the individual 3-run test run data set for the best performing source for each regulated pollutant. Tables 7 through 9 of this preamble present the analysis summaries and the new source MACT floor limits.

TABLE 7—SUMMARY OF MACT FLOOR RESULTS FOR PARTICULATE MATTER AND METALS FOR NEW SOURCES

Subcategory	Parameter	PM (mg/dscm)	Hg (mg/dscm)	Cd (mg/dscm)	Pb (mg/dscm)
Incinerators	Avg of top performer	0.0056	0.0001	0.0002	0.0007
	99% UL of top (test runs) =	0.00766	0.000123	0.000654	0.00126
	Proposed limit =	0.0077	0.00013	0.00066	0.0013
Energy recovery units	Avg of top performer	3.270	0.000032	0.000085	0.000454
	99% UL of top (test runs) =	4.37	0.00013	0.000115	0.001189
	Proposed limit =	4.4	0.00013	0.00012	0.0012
Waste-burning kilns	Avg of top performer	0.9287	0.00101	0.000038	0.000386
	99% UL of top (test runs) =	1.80	[a]	[a]	0.00077
	Proposed limit =	1.8	0.024	0.0003	0.00078
Burn-off ovens	Avg of top performer	6.676	0.0007	0.0008	0.0050
	99% UL of top (test runs) =	27.48	0.00329	0.00316	0.02859
	Proposed limit =	28	0.0033	0.0032	0.029
Small, remote incinerators	Avg of top performer	83.53	0.001	0.011	0.448
	99% UL of top (test runs) =	268.9	0.00126	0.0564	1.3877
	Proposed limit =	240[b]	0.0013	0.057	1.4[b]

[a]—Only one run data point, therefore UL cannot be calculated. The EG limit was selected as the NSPS limit.
[b]—The NSPS UL limit exceeds the EG limit. The EG limit was selected as the NSPS limit.

TABLE 8—SUMMARY OF MACT FLOOR RESULTS FOR NEW UNITS—HCl, NO_X, SO_2

Subcategory	Parameter	HCL (ppmdv)	NO_X (ppmdv)	SO_2 (ppmdv)
Incinerators	Avg of top performer	0.0413	9.033	0.223
	99% UL of top (test runs) =	0.0732	18.99	1.47
	Proposed limit =	0.074	19	1.5
Energy recovery units	Avg of top performer	0.06813	52.57	1.049
	99% UL of top (test runs) =	0.169	74.52	4.44

TABLE 8—SUMMARY OF MACT FLOOR RESULTS FOR NEW UNITS—HCl, NO_X, SO_2—Continued

Subcategory	Parameter	HCL (ppmdv)	NO_X (ppmdv)	SO_2 (ppmdv)
	Proposed limit =	0.17	75	4.1[a]
Waste-burning kilns	Avg of top performer	0.13	108.3	1.43
	99% UL of top (test runs) =	[b]	134.65	3.58
	Proposed limit =	1.5	140	3.6
Burn-off ovens	Avg of top performer	7.106	13.16	0.000
	99% UL of top (test runs) =	17.56	15.43	0
	Proposed limit =	18	16	1.5[c]
Small, remote incinerators	Avg of top performer	45.437	73.66	4.793
	99% UL of top (test runs) =	244.01	367.23	42.49
	Proposed limit =	150(a)	210[a]	43

[a]—The NSPS UL limit exceeds the EG limit. The EG limit was selected as the NSPS limit.
[b]—Only one run data point, therefore UL cannot be calculated. The EG limit was selected as the NSPS limit.
[c]—Zero value calculated for the subcategory, which will not allow for data variability. The lowest unit with non-zero data was used to calculate this limit.

TABLE 9—SUMMARY OF MACT FLOOR RESULTS FOR NEW UNITS—CO AND DIOXINS/FURANS

Subcategory	Parameter	CO (ppmdv)	Dioxin/Furan (Total mass basis) (ng/dscm)	Dioxin/Furan (Total TEQ basis) (ng/dscm)[a]
Incinerators	Avg of top performer	0.600	0.0023	0.0102
	99% UL of top (test runs) =	1.39	0.00927	0.035
	Proposed limit =	1.4	0.0093	0.00073
Energy recovery units	Avg of top performer	0.650	0.0161	0.0005
	99% UL of top (test runs) =	2.95	0.0334	0.00181
	Proposed limit =	3.0	0.034	0.0027
Waste-burning kilns	Avg of top performer	16.22	0.00011	0.000000
	99% UL of top (test runs) =	35.23	0.000348	0.000000
	Proposed limit =	36	0.00035	0.000028
Burn-off ovens	Avg of top performer	17.51	0.0013	B
	99% UL of top (test runs) =	73.87	0.0101	B
	Proposed limit =	74	0.011	0.00086
Small, remote incinerators	Avg of top performer	0.447	366.3	B
	99% UL of top (test runs) =	3.96	1,103.3	B
	Proposed limit =	4.0	1,200	94

[a]—Dioxin/furan TEQ UL values often were greater than the total mass basis UL values, which would result in a TEQ limit greater than the total mass basis. Therefore, paired total mass basis/TEQ data were analyzed and found that TEQ is 0.078 times the amount of the total mass basis. The dioxin/furan TEQ limits were therefore calculated based on 0.078 times the total mass basis limit.
[b]—Dioxin/furan TEQ data were not reported for this subcategory.

As noted in the tables above, there were some instances where there were fewer test runs available for the best performing unit so that the UL could not be calculated. There were also some cases where the calculated UL produced a result that was greater than the existing MACT floor limit for that pollutant in that subcategory. Since the limit for new sources cannot be less stringent than that of existing sources, EPA selected the existing source MACT floor limit as the new source MACT floor limit in these instances. There was also one case where the best-performing source in the burn-off oven subcategory reported zero for each test run for SO_2. This yields a calculated UL of zero (since the mean and standard deviation are zero), which does not give any allowance for variability. To address this, EPA used test data for the next best-performing source (*i.e.,* the lowest emitting source with non-zero test data). EPA solicits comment on this approach for setting this limit.

EPA also solicits comment on whether the EPA should use an alternate one-sided statistical interval, the 99 percent UPL instead of the UL. In general, a prediction interval (*e.g.,* a UPL) is useful in determining what future values are likely to be, based upon present or past background samples taken. The 99 percent UPL represents the value which one can expect the mean of future 3-run performance tests from the best-performing 12 percent of sources to fall below with 99 percent confidence, based upon the results of the independent sample of observations from the same best performing sources. The 99 percent UPL value based on the test run data for those units in the best-performing 12 percent can be calculated using one of the following spreadsheet equations depending on the distribution of the data:

Normal distribution: 99% UPL = AVERAGE(Test Runs in Top 12%) + [STDEV(Test Runs in Top 12%) × TINV(2 × probability, n − 1 degrees of freedom) × SQRT((1/n) + (1/m))], for a one-tailed upper prediction limit with a probability of 0.01, sample size of n, and number of test runs whose average will be reported to EPA for compliance of m = 3.

Lognormal distribution: 99% UPL = EXP {AVERAGE(Natural Log Values of Test Runs in Top 12%) + [STDEV(Natural Log Values of Test Runs in Top 12%) × TINV(2 × probability, n − 1 degrees of freedom) × SQRT((1/n) + (1/m))]}, for a one-tailed upper prediction limit with a probability of 0.01, sample size of n, and number of test runs whose average will be reported to EPA for compliance of m = 3.

In addition to the nine regulated pollutants, EPA is also proposing opacity standards for new and existing

CISWI. We considered how to appropriately account for variability, given the differences in opacity testing versus testing for the nine regulated pollutants. Because opacity can be affected by the amount, type and particle characteristics of PM in the gas stream, as well as process operation, we believe that opacity is an appropriate surrogate for PM emissions. Therefore, using a ratio of PM to opacity would be an appropriate method for determining the opacity that would be associated with a given PM concentration. Using the data available for CISWI units, we identified the best-performing unit with respect to PM for which we have opacity data, and that unit has a ratio of opacity to PM of 0.053. This ratio was then multiplied by each of the MACT floor PM limits, which were determined accounting for variability, for each subcategory to establish an opacity limit. We are requesting comment on whether this is a reasonable approach to establishing opacity limits while accounting for data variability, and request any additional opacity information that we may utilize to establish an opacity limit. We are also requesting comment on the appropriateness of setting opacity limits for this source category.

As explained above, concurrent with this proposal, EPA is also proposing to define the term "solid waste" for non-hazardous secondary materials. That proposal describes two alternative definitions of solid waste, and EPA has in this proposed rule for CISWI units calculated MACT standards based on each solid waste definition. EPA is proposing MACT emissions standards based on the primary proposed definition of solid waste. In addition, EPA has determined the MACT emissions standards that would apply if the alternative proposed definition of solid waste was finalized, and we are taking comment on those standards.

For purposes of the MACT standards based on the primary proposed definition of solid waste, we have considered certain secondary materials (including pulp and paper sludge, wood residuals, and some tire-derived fuel) not to be solid waste, based on available information. Therefore, units combusting those materials have not been included in the proposed CISWI MACT calculations (*i.e.,* the calculations based on the primary proposed definition of solid waste). EPA solicits comment on that conclusion for these and other secondary materials, and will take into account any relevant information that may warrant revising the proposed CISWI MACT floors. Comments relating to the proposed definition of solid waste should be submitted to the EPA docket for that rulemaking, because EPA will not be addressing any such comments in the final CISWI rule.

D. Rationale for Beyond-the-Floor Alternatives

As discussed above, EPA may adopt emissions limitations and requirements that are more stringent than the MACT floor (*i.e.,* beyond-the-floor). Unlike the MACT floor methodology, EPA must consider costs, non-air quality health and environmental impacts and energy requirement when considering beyond-the-floor alternatives.

In developing this proposal, EPA considered for existing units the proposed CISWI NSPS emission limits as a basis for the beyond-the-floor analysis for each subcategory. The CISWI NSPS limits are the MACT limits applicable to new CISWI units that are established through analysis of the best performing single source for each regulated pollutant (*see* earlier discussion in Section IV.C above). There are separate NSPS limits for each of the five CISWI subcategories: Incinerators; energy recovery units; waste-burning kilns; burn-off ovens; and small, remote incinerators. We request public comments on all aspects of the beyond-the-floor analysis, including whether there are combinations of control approaches that would cost-effectively reduce emissions of the Section 129(a)(4) pollutants. We specifically request that the commenter provide cost, technical and other relevant information in support of any beyond-the-floor alternatives. EPA will evaluate the comments and any other additional information and may adopt beyond-the-floor options for the final rule if any that are identified are determined to be reasonable.

The beyond-the-floor analysis for each subcategory is based on an evaluation of the types of control approaches that would be necessary to achieve the NSPS level of control for the same subcategory. Specifically, for purposes of our beyond-the-floor analysis, we evaluated the different combinations of available emission control techniques, including additional add-on controls, that existing units would have to employ were we to require additional emissions reductions beyond the floor levels set forth above. We are unaware of any control approaches other than those discussed below that would result in emissions reductions from CISWI units.

As part of our impacts analysis (discussed in section V. below), we evaluated whether existing facilities would choose to cease burning solid waste in incineration units after promulgation of the final CISWI standards. We have determined that most facilities with units in the incinerators, small remote incinerators or burn-off ovens subcategories will choose to cease operations once the proposed MACT floor limits are promulgated and that all units in these three subcategories will cease combusting waste if beyond-the-floor levels are adopted. We considered this fact in evaluating the beyond-the-floor options for these three subcategories and specifically in our consideration of the costs associated with the beyond-the-floor options, which we found unreasonable.

We analyzed the beyond-the-floor options on a pollutant-by-pollutant basis for each subcategory. We discuss below the possible beyond-the-floor controls and why we rejected them.

- For PM, Cd and Pb, units would add a fabric filter if there were none already, or improve the fabric filter if the unit is already equipped with one but could not meet the beyond-the-floor limit. Units could also be required to add an additional PM control device if existing fabric filters could not be modified to comply with the beyond-the-floor limit.
- For HCl and SO_2, units would add a packed-bed wet scrubber if there were none already, or if a wet scrubber already existed on the unit, upgrade to a larger pump to increase the liquid to gas ratio. If the unit was equipped with lime injection or a spray dryer, the beyond-the-floor technology was to add more lime for SO_2 control. If more control was needed for SO_2, but not HCl, and the unit has a wet scrubber already, they would add caustic to the scrubber liquor. Units could also be required to add an additional SO_2 control device if the existing scrubber could not be modified to comply with the beyond-the-floor limit. The floor limits established above for waste-burning kilns are already at the quantification limits of the test method and we are not aware of alternative methods to quantify additional reductions in HCl emissions. In addition, we are not aware of any control technologies available that would reduce HCl emission from existing waste-burning kilns to levels below the floor levels. Therefore, we could not evaluate a beyond-the-floor option for HCl emissions from waste-burning kilns.
- For Hg and CDD/CDF, activated carbon would be added and the carbon addition rate would be adjusted to meet

the amount of reduction necessary to meet the proposed limit.

- For NO_X, no beyond-the-floor options are demonstrated to be achievable, as discussed below.
- For CO, the beyond-the-floor option consists of afterburner retrofits, tune-ups, advanced combustion controls or catalytic oxidation for each subcategory except for waste-burning kilns and energy recovery units. No beyond-the-floor options are available for these two subcategories, as discussed below.

CO. For CO, we evaluated afterburner retrofits, tune-ups, advanced combustion controls or an oxidation catalyst for incinerators, small remote incinerators and burn-off ovens as being potential beyond-the-floor control technologies that could be applied to these units. Afterburner retrofits are applicable to units that have a secondary combustion chamber or an afterburner chamber installed on the device. Waste-burning kilns and energy recovery units are not designed with secondary chambers or afterburners, so this particular control cannot be applied to these two subcategories.

For waste burning kilns, a significant amount of CO emissions can result from the presence of organic compounds in the raw materials and not only from incomplete combustion, so good combustion controls and practices are not as effective. Oxidation catalysts have not been applied to waste-burning kilns and may not be as effective on waste-burning kilns as they are on other sources due to plugging problems. The only effective beyond-the-floor control we could identify for waste-burning kilns would be a regenerative thermal oxidizer (RTO). In the analysis for the proposed Portland Cement NESHAP, EPA notes that the additional costs and energy requirements associated with an RTO are significant, with an additional annualized cost of $3.8 million per year (*see* 74 FR 21153). Under the most cost effective scenario (existing unit emitting at 710 ppmv and a 98 percent CO reduction) the cost per ton of additional CO removal would be approximately $1,500. However, at the CO levels for most facilities, the cost per ton could be much higher. In addition, RTO have significant additional energy requirements, and themselves create secondary emissions of CO, NO_X, SO_2 and PM due to their electrical demands (see 74 FR 21153). Given the cost and adverse environmental and energy impacts, we determined that RTO was not a reasonable beyond-the-floor alternative to control CO emissions from waste-burning kilns.

For energy recovery units, we analyzed a beyond-the-floor CO limit of 3 ppm. In comparison, the proposed MACT floor emission limit is 150 ppm. Therefore, the beyond-the-floor CO emission limit is approximately 98 percent less than the MACT floor emission limit. We are unaware of any technology that is able to continuously meet a 3 ppm CO limit for all existing energy recovery units. Variances in fuel composition and condition will have an effect on CO emissions in addition to the controls in place, so this limit may be achievable for the best source based on their particular unit design and fuel inputs, but not demonstrated to be achievable for any other existing units without unreasonable costs associated with modification of the units. As a comparison, the proposed boiler NESHAP limit varies by combustor design, but for biomass boilers, which burn fuels and have combustor designs that are similar in characteristics to some CISWI energy recovery units, the limits are in the order of 200 to 700 ppm. Given the lack of available controls that are demonstrated to achieve the beyond-the-floor emission limits at existing units and the costs associated with making the necessary modifications at existing units, we are not proposing beyond-the-floor limits for CO for energy recovery units.

NO_X. For NO_X, we evaluated SNCR as the likely control technology that sources would apply to achieve the beyond-the-floor limits. The control option would be to add SNCR if there were none installed to meet the MACT floor, or to increase the reagent injection rate if the unit was already equipped with SNCR technology. We also considered whether selective catalytic reduction (SCR) could be utilized by sources to achieve the beyond-the-floor limits. SNCR is a proven technology for waste-combustion units, with typical effectiveness of 30 to 50 percent. These reductions are within the reach of the levels estimated to meet the MACT floor emission limits. However, to achieve lower reductions (*i.e.,* greater than 50 percent) than the beyond-the-floor limits would require, SNCR may need to be applied in conjunction with combustion controls (Air Pollution Control Technology Fact Sheet, SNCR, EPA–452/F–03–031). Feasibility of these combustion controls, such as low NO_X burners or combustion chamber modifications, are unit-specific and are likely not applicable to all existing units; therefore, compliance with the beyond-the-floor would likely require significant modification at considerable cost for some existing units. In contrast, new sources can be designed so that the combustion chamber and air flow characteristics reduce NO_X formation, which, in combination with SNCR controls, would be able to meet the new source NO_X limits. SCR is typically utilized in combustion units such as industrial boilers and process heaters, gas turbines and reciprocating internal combustion engines (Air Pollution Control Technology Fact Sheet, SCR, EPA–452/F–03–032). We are not aware of any successful applications of SCR technology to waste-combustion units, however. This may be due to difficulties operating SCRs in operations where there is significant PM or sulfur loading in the gas stream. These two gas stream constituents can reduce catalyst activity, and lower the resulting effectiveness of the SCR, through catalyst poisoning and blinding/plugging of active sites by ammonia sulfur salts (formed from sulfur in the flue gas with the ammonia reagent) and PM (Air Pollution Control Technology Fact Sheet, SCR, EPA–452/F–03–032). Therefore, we determined that available controls were not demonstrated adequately for existing CISWI units in any of the five subcategories to meet the beyond-the-floor NO_X emission limits.

HCl and SO_2. We expect that waste-burning kilns would install scrubbers to meet the proposed MACT floor emission limits for HCl, and the proposed EG and NSPS limits for HCl are the same. As discussed above, the HCl floor level for waste-burning kilns is near the quantification limits of the available test methods, and we are not aware of alternative methods to quantify beyond-the-floor reductions.

The scrubbers needed to meet the CISWI MACT floor limits for HCl would also meet the CISWI MACT floor levels for SO_2. However, we are not certain that it is feasible for existing waste-burning kilns to utilize additional caustic in their scrubbers, or in their existing flue gas desulfurization devices, to be able to consistently meet the 3.6 ppm beyond-the-floor emission limit for SO_2. There are limits to the amounts of additional caustic or lime that are technically feasible and the SO_2 content of the flue gas will vary depending on the fuel and the sulfur content of process raw materials that are charged to the waste-burning kiln. The only option for achieving additional SO_2 control is to add an additional SO_2 scrubbing device in series with the scrubber required to comply with the MACT floor limit. While we did not quantify the costs, we concluded, based on our review of the cost information, that this level of control would pose unreasonable costs that would result in units ceasing to combust wastes in kilns. Therefore, we determined that

additional controls were not demonstrated to continuously meet the beyond-the-floor SO_2 emission limits at existing waste-burning kilns. We examined beyond-the-floor options for the other subcategories as discussed below.

PM. In our analysis, we estimate that waste-burning kilns would install fabric filter controls or improve existing fabric filters to meet the proposed CISWI MACT floor limits for PM and metals. To meet the metals floor limits, highly efficient fabric filters, and possibly membrane bags, would be needed. These controls are the best technology available to control PM, and we have not identified any additional controls that are available that would enable existing waste-burning kilns to continuously meet the beyond-the-floor PM emission limit equivalent to the proposed CISWI NSPS limit (which is considerably lower than the CISWI floor). We analyzed beyond-the-floor controls for the other four subcategories as discussed below.

As with waste-burning kilns, we estimate that existing units in the energy recovery units subcategory would install fabric filter controls or improve existing fabric filters to meet the proposed CISWI MACT floor limits for PM and metals. As with waste-burning kilns, the fabric filters would need to be highly efficient to meet the metals floor limits, and likely would need to be membrane bags. As stated above, membrane fabric filters are the best technology available to control PM and metals. As such, the fabric filters that we believe will be necessary to control the metals will likely achieve a level of performance that is better than the MACT floor limit for PM, resulting in additional PM reductions beyond the existing source floor level of control. For this reason, we believe that the PM emissions reductions associated with going beyond-the-floor to the new source floor limits is less than the 200 tons per year estimated based on an evaluation of the difference in PM emissions under the proposed existing source floor and the proposed new source floor. Furthermore, to achieve PM and metals emissions reductions greater than those achieved using the fabric filters that will be required to meet the MACT floor emission limits, existing sources would likely need to install an additional particulate control device, such as a cartridge filtration system, which would require additional capital and operating expense, as well as require additional energy to power the fans for adequate draft. While we did not quantify the costs, we concluded, based on our review of the cost information, that this level of control would pose unreasonable costs.

We analyzed beyond-the-floor controls for the other three subcategories as discussed below.

Emissions Reduction Analysis Results. We analyzed the emissions reductions that would be achieved if the beyond-the-floor levels were adopted as MACT for those pollutants and subcategories for which additional control techniques were identified that could achieve beyond-the-floor emission limits. We estimate that the beyond-the-floor levels for existing CISWI units would achieve additional emission reductions (relative to the MACT floor) of 326 tons per year (0.01 tons Cd, 3.5 CO, 113 HCl, 0.07 Pb, 0.03 Hg, −0.1 NO_X, 208 PM, 1.6 SO_2 and 0.0001 dioxins/furans).

Analysis Results for Incinerator, Small Remote Incinerator and Burn-Off Ovens Subcategories

As was done in the cost analysis for the MACT floor emission limits, we also considered whether units would cease to combust waste and choose an alternative waste disposal method rather than add controls to comply with the beyond-the-floor limits. Based on the high costs of controls relative to the costs of alternative waste disposal methods, we concluded that all units within the incinerators, burn-off ovens and small remote incinerators subcategories would shut down rather than comply with the beyond-the-floor limits. Facilities with incinerator units and small remote incinerator units would use alternative landfill disposal and facilities with burn-off ovens would use abrasive blasting. In comparison, for the MACT floor impacts analysis, we determined there were 17 total units within these three subcategories that would remain open and comply with the MACT floor emission limits. The emission reductions above account for the secondary impacts of landfill gas flare emissions that would result from the incremental waste that is diverted to landfills from existing CISWI units. Once these secondary impacts of the landfill gas flaring are accounted for, the emissions reduction is approximately zero for the incinerator, small remote incinerator and burn-off oven subcategories, mainly due to the increase in emissions from flaring the landfill gases generated by the additional diverted waste, compared to the modest additional stack emissions reductions from shutting these units down.

The cost of the additional emissions reductions associated with going from the MACT floor to the beyond-the-floor level vary by pollutant and subcategory. For the incinerator, small remote incinerator and burn-off oven subcategories, the incremental annualized costs of control or alternative waste disposal is approximately $690,000. As mentioned above, because of the increase in landfill gases, this additional cost would result in no additional emissions reductions for these source categories. The beyond-the-floor limits for these source categories would be achieved at considerable cost, would result in closure of additional units that would not close under the floor alternative, and would result in no additional emissions reduction; therefore, we have determined it is not reasonable to go beyond-the-floor for these source categories.

Analysis Results for Energy Recovery Units and Waste-Burning Kilns. For the energy recovery units and waste-burning kilns, we analyzed the additional emissions reductions and additional control and monitoring costs of going beyond-the-floor by pollutant groups according to the controls described above. Table 10 of this preamble lists the incremental costs and pollutant emissions reductions relative to the MACT floor level of control.

TABLE 10—INCREMENTAL COSTS AND EMISSION REDUCTIONS EXPECTED FOR EXISTING UNITS TO COMPLY WITH BEYOND-THE-FLOOR EMISSION LIMITS (RELATIVE TO THE MACT FLOOR)

Pollutants	Subcategory	Additional annual costs ($/yr)	Additional emissions reductions (ton/year)	Incremental cost effectiveness (additional costs/additional emissions reductions, $/ton)
PM, Cd, Pb	Energy recovery unit	2,082,013	202	10,307
Hg, CDD/CDF	Energy recovery unit	18,562,287	0.03	618,742,900
	Waste-burning kiln	126,944,291	0.00002	>1 Billion
HCl, SO_2	Energy recovery unit	15,985,182	77	207,599

As discussed earlier, we believe that the additional emissions reduction for PM, Cd, and Pb are likely to be much lower than this analysis suggests, because sources will require some of the best PM control devices to meet the MACT floor level of control for metals, and will likely exceed the level of performance for PM needed to meet the MACT floor emission limit. Therefore, we have concluded that the incremental costs of additional control above the MACT floor emission limits are not reasonable relative to the level of emission reduction achieved.

New Units. No beyond-the-floor option was analyzed for new units because we are not aware of any technologies or methods to achieve emission limits more stringent than the MACT floor limits for new units. As an example, we have discussed potential problems associated with additional SNCR reagent earlier in this section of the preamble. Incremental additions of activated carbon have not been proven to achieve further reductions above the projected flue gas concentration estimated to achieve the limits for new sources. Furthermore, we already estimate no new CISWI sources will be constructed due to the costs associated with the MACT floor limits in the proposed NSPS. For this reason, we do not think it is reasonable to further add to the costs associated with the proposed NSPS.

In light of the technical feasibility, costs, energy and non-air quality health and environmental impacts discussed above, we have determined it is not reasonable to establish beyond-the-floor limits for existing and new CISWI units.

We also calculated potential beyond-the-floor emissions reductions for the "alternative approach" identified for consideration and comment in a parallel proposal under RCRA, which could potentially result in an additional 13,014 tons per year of projected emissions reductions (0.9 Cd, 3.5 CO, 7 HCl, 16.4 Pb, 1.3 Hg, −0.1 NO_X, 12,984 PM, 1.6 SO_2 and 0.001 dioxins/furans). These are the reductions that would be achieved if we adopted the NSPS limits for the alternative approach as the beyond-the-floor limit for existing sources. We considered the same technical considerations and used the same emissions reductions and cost calculation methodologies described above for the proposed approach, which result in very similar cost effectiveness values as presented in Table 10 of this preamble. However, we note that several of the MACT floor limits for energy recovery units and waste-burning kilns under the alternative approach are not as stringent as those for the proposed approach, and the additional emission reductions that can be achieved by going beyond the floor for the alternative approach are much greater than the emission reductions available by going beyond the floor under the primary approach. Therefore, in the case of the alternative approach, there may be intermediate levels of control that would be reasonable. Additional information on floor and beyond-the-floor costs is discussed in "Compliance Cost Analyses for Existing CISWI Units" found in the CISWI docket.

E. Rationale for Other Proposed Amendments

In addition to the proposed emission limits, the following amendments are being proposed in this action.

1. Definitions and Removal of Exemptions

We are revising the definition of CISWI unit to reflect the Court decision that all units burning solid waste as defined by the Administrator under RCRA are to be covered by regulation under CAA Section 129. We are also adding a definition of "solid waste incineration unit" and we are removing the definition of "commercial and industrial waste." We are also proposing definitions of the five subcategories of CISWI units that will be regulated under the proposed rules.

In the 2000 CISWI rule, there were 15 types of units that were exempted from regulation under CISWI. We are proposing to remove some of the exemptions contained in the 2000 CISWI rule and we are maintaining the statutory exemptions and the exemptions for units included in the scope of other CAA Section 129 standards as discussed below. We believe that the proposed rule is drafted in such a way to avoid the situation where a unit subject to standards under another Section 129(a)(1) standard, would also be subject to this rule. We request comment on the proposed exemptions that address units included in the scope of other CAA Section 129 standards.

To address the vacatur of the CISWI Definitions rule, EPA is proposing to regulate any combustion unit burning any solid waste, as that term is defined by the Administrator under RCRA, at a commercial or industrial facility. The 2000 CISWI rule specifically exempted six types of units that may be CISWI units under this proposed rule: agricultural waste incineration units; cyclonic barrel burners; burn-off ovens; cement kilns; chemical recovery units; and laboratory analysis units. These six types of units would be regulated under the revised proposed CISWI standards if they burn solid waste at a commercial or industrial facility.

The exemptions that would be retained in the proposed rule are either statutory exemptions provided under CAA Section 129, or are for waste combustion units regulated under other Section 129 NSPS or EG. In particular, CAA Section 129(g)(1) specifically exempts:

"* * * incinerators or other units required to have a permit under section 3005 of the Solid Waste Disposal Act. The term 'solid waste incineration unit' does not include (A) materials recovery facilities (including primary and secondary smelters) which

combust waste for the primary purpose of recovering metals, (B) qualifying small power production facilities, as defined in section 3(17)(C) of the Federal Power Act (16 U.S.C. 769(17)(C)), or qualifying cogeneration facilities, as defined in section 3(18)(B) of the Federal Power Act (16 U.S.C. 796(18)(B)), which burn homogeneous waste (such as units which burn tires or used oil, but not including refuse-derived fuel) for the production of electric energy or in the case of qualifying cogeneration facilities which burn homogeneous waste for the production of electric energy and steam or forms of useful energy (such as heat) which are used for industrial, commercial, heating or cooling purposes * * *"

Therefore, the proposed CISWI rule retains exemptions for materials recovery facilities, qualifying small power production facilities, qualifying cogeneration facilities and hazardous waste combustors required to have a permit under Section 3005 of the Solid Waste Disposal Act.

EPA is also proposing to exempt from CISWI the waste combustion units that are currently included in the scope of another effective NSPS or EG or that EPA currently intends to regulate in an NSPS or EG. Those waste combustion units are: MWC units; medical waste incineration units; sewage treatment plants; sewage sludge incineration units; and OSWI units, which include pathological waste incineration units and institutional incinerators. There are existing standards for MWC units, medical waste combustion units and sewage treatment plants, but no standards are currently in place for pathological waste incineration units or SSI units. Regulations are currently being developed for SSI under proposed NSPS and EG of part 60. EPA also currently intends to regulate pathological waste incineration units in the revised "Other Solid Waste Incineration (OSWI)" standards under development. EPA's intent in the CISWI rule is to exclude units that are properly regulated as OSWI units. However, additional solid waste incineration units may exist that are OSWI units, which EPA has not identified in this proposed rule. EPA solicits comment on the scope of the proposed exemptions for units subject to CAA Section 129 standards.

We are also proposing the removal of the 2000 CISWI rule exemption for units burning greater than 30 percent MSW and with the capacity to burn less than 35 tons per day of MSW or refuse derived fuel. We are proposing to remove this exemption to ensure that any CISWI unit combusting any solid waste is subject to these standards. Therefore, commercial and industrial units that were previously exempt pursuant to this provision would be required to meet the emission limits and operating requirements of the proposed rule.

The 2000 CISWI rule also defined CISWI units such that industrial and commercial waste combustion units recovering energy (*e.g.* units that would be boilers and process heaters if they did not combust solid waste) were not subject to regulation as CISWI units. This definition is not consistent with the statute and, as discussed above, the definitions are being revised to address the CISWI Definitions Rule vacatur so that any unit at a commercial or industrial facility combusting any solid waste, as defined by the Administrator under RCRA, will be subject to the CISWI NSPS or EG. Therefore, the proposed definitions would no longer make a distinction between those units that recover energy and those units that do not recover energy. As discussed earlier, those energy recovery units that burn solid waste but were previously subject to the boilers rule are now CISWI units and are addressed under the energy recovery units subcategory.

Cement kilns and rack, part and drum reclamation units (*i.e.* burn-off ovens) were exempt from the 2000 CISWI standards and, as stated above, we are proposing to create subcategories for those units and subject them to this proposed rule in light of the CISWI Definitions Rule vacatur. We note that other Section 129 standards may contain an exemption for cement kilns. Those exemptions do not excuse waste burning kilns as defined in this proposed rule from compliance with the proposed CISWI standards. As those other Section 129 rules are amended, we will clarify that cement kilns that meet the proposed definition of waste-burning kiln are exempt from those standards because they are subject to the CISWI standards.

For one type of unit that is exempt by statute from the definition of solid waste incineration unit, air curtain incinerators combusting "clean wood", we are requesting comment on the requirement for those units to obtain title V permits.

In addition, we are considering amending the exemption provisions at 40 CFR 60.2020 and 60.2555 to remove all references to units that are statutorily exempt from the definition of solid waste incineration unit. If we took such action, we would develop a new section to retain the notification requirements contained in those sections and applicable to such statutorily exempt units. We request comment on this proposed approach.

2. Performance Testing and Monitoring Requirements

We are proposing some adjustments to the performance testing and monitoring requirements that were promulgated in 2000. For existing CISWI units, we are proposing retaining the current performance testing and monitoring requirements of the rule and adding the following requirements:

- Annual inspections of scrubbers, fabric filters and other air pollution control devices that may be used to meet the emission limits.
- Annual visual emissions test of ash handling procedures (for all subcategories except waste-burning kilns).
- Control device parameter monitoring for activated carbon injection, electrostatic precipitators and SNCR controls.
- For energy recovery units: CO CEMS monitoring, continuous opacity monitoring (COMS) for units that are not equipped with wet scrubbers and PM CEMS for units greater than 250 MMBtu/hr capacity.
- For waste-burning kilns, Hg CEMS monitoring.
- Monitoring of bypass stack use if installed at an affected unit.

These proposed requirements were selected to provide additional assurance that sources continue to operate at the levels established during their initial performance test. For the waste-burning kiln and energy recovery unit subcategories, the proposed CEMS requirements are consistent with the CAA Section 112(d) standards proposed for their non-waste burning counterparts, but adjusted to reflect the pollutants subject to CAA Section 129 regulations. For example, the proposed Portland Cement NESHAP (74 FR 21136) requires monitoring of Hg with a Hg CEMS. Likewise, the energy recovery unit monitoring requirements are similar to the Boiler NESHAP being proposed concurrently with the CISWI proposal. In doing so, we are not only reflecting the improvements in monitoring technology and practices for these subcategories made since 2000, but are also providing consistency in monitoring, recordkeeping and reporting, where appropriate. Likewise, the visual emissions test of ash handling procedures and annual control device inspections have been adopted for HMIWI, another CAA Section 129 source category. HMIWI standards (74 FR 51367) contain these requirements to ensure that the ash, which may contain metals, is not emitted to the atmosphere through fugitive emissions and that control devices are maintained properly.

The large and small MWC standards also have similar fugitive ash monitoring requirements. We propose to require the fugitive ash monitoring provisions that are contained in the HMIWI and MWC rules.

The proposed amendments would allow sources to use the results of emissions tests conducted within the previous two years to demonstrate initial compliance with the revised emission limits as long as the sources certify that the previous test results are representative of current operations. Such tests must have been conducted using the test methods specified in the CISWI rules and must be the most recent tests performed on the unit. Those sources, whose previous emissions tests do not demonstrate compliance with one or more of the revised emission limits, would be required to conduct another emissions test for those pollutants. This allowance to use previous tests would minimize the burden to affected sources, especially since most sources performed recent emissions tests in support of the development of the CISWI standards (*i.e.,* the CISWI Phase 2 ICR) and sources subject to the 2000 CISWI EG already test for HCl, PM and opacity on an annual basis. We seek comment on the appropriateness of the use of previously conducted performance tests.

The proposed amendments also would allow for reduced testing of PM, HCl, and opacity as were allowed in the rule promulgated in 2000, but we are proposing amending these reduced testing allowances to provide a compliance margin of 75 percent of the standard to be able to qualify for testing for these pollutants once every three years. The reduced testing allowance and compliance margin provides flexibility and incentive to sources that operate well within the emissions standard, and to provide more timely follow-through, on assuring that sources that are marginally in compliance, will remain in compliance.

Additional requirements also are proposed for new CISWI. For new sources, we are proposing retaining the current requirements and adding the requirements for existing units as listed above, plus requiring CO CEMS for all subcategories of CISWI. These CEMS would be relatively simple to install for a new CISWI unit, and would help ensure that the sources are operated well using good combustion practices. Low CO levels are an indicator of complete combustion and that the unit is being operated in a manner that minimizes not only CO emissions, but also emissions of other pollutants.

We also are clarifying that the rule allows for the following optional CEMS use: CO CEMS, NO_X CEMS, and SO_2 CEMS for existing sources; and NO_X CEMS, SO_2 CEMS, PM CEMS, HCl CEMS, multi-metals CEMS, Hg CEMS, integrated sorbent trap Hg monitoring and integrated sorbent trap dioxin monitoring for existing and new sources. Some of the subcategories may have CO CEMS, NO_X CEMS, or SO_2 CEMS already to meet other regulatory or permit requirements and we propose to would allow them to continue to use these monitors to demonstrate continuous compliance with the CISWI standards. The optional use of HCl CEMS, multi-metals CEMS, integrated sorbent trap Hg monitoring and integrated sorbent trap dioxin monitoring will be available on the date a final performance specification for these monitoring systems is published in the **Federal Register** or the date of approval of a site-specific monitoring plan. The proposed monitoring provisions are discussed in more detail below.

Monitoring Provisions for SNCR. The proposed amendments would require monitoring of secondary chamber temperature (if applicable to the CISWI unit, since certain subcategories may not have a secondary chamber or afterburner) and reagent (*e.g.,* ammonia or urea) injection rate for CISWI that install SNCR as a method of reducing NO_X emissions. These are easily measured parameters that will ensure the SNCR continues to be well operated and able to achieve the desired emissions reductions.

Monitoring Provisions for Activated Carbon Injection (Hg sorbent injection). The proposed amendments would require monitoring of activated carbon sorbent injection rate to ensure that the minimum sorbent injection rate measured during the compliance test is continually maintained.

Monitoring Provisions for ESP. The proposed amendments would require monitoring of the voltage and amperage of the collection plates to ensure that the ESP operating parameters measured during the compliance test are maintained on a continuous basis.

CO CEMS. The proposed amendments would require the use of CO CEMS for new sources and allow the use of CO CEMS on existing sources, except energy recovery units, where a CO CEMS is also required for existing sources. Owners and operators who use CO CEMS would be able to discontinue their annual CO compliance test. The continuous monitoring of CO emissions is an effective way of ensuring that the combustion unit is operating properly. The proposed amendments incorporate the use of performance specification (PS)–4B (Specifications and Test Procedures for Carbon Monoxide and Oxygen Continuous Monitoring Systems in Stationary Sources) of appendix B of 40 CFR part 60.

The proposed CO emission limits are based on data from infrequent (normally annual) stack tests and compliance would be demonstrated by stack tests. The change to use of CO CEMS for measurement and enforcement of the same emission limits must be carefully considered in relation to an appropriate averaging period for data reduction. In past EPA rulemakings for incineration units, EPA has selected averaging times between four hours and 24 hours based on statistical analysis of long-term CEMS data for a particular subcategory. Because sufficient CO CEMS data are unavailable for CISWI to perform such an analysis and determine an emission level that would correspond to a shorter averaging period, EPA concluded that the use of a 24-hour block average was appropriate to address potential changes in CO emissions. The 24-hour block average would be calculated following procedures in EPA Method 19 of appendix A–7 of 40 CFR part 60. Facilities electing to use CO CEMS as an optional method would be required to notify EPA one month before starting use of CO CEMS and one month before stopping use of the CO CEMS. In addition, EPA specifically requests comment on whether continuous monitoring of CO emissions should be required for all existing CISWI.

PM CEMS. The proposed amendments would allow the use of PM CEMS as an alternative testing and monitoring method (except for energy recovery units with a heat input capacity greater than 250 MMBtu/hr which are required to use them). Owners or operators who are required to use, or choose to rely on, PM CEMS would be able to discontinue their annual PM compliance test. In addition, because units that demonstrate compliance with the PM emission limits with a PM CEMS would also be meeting the opacity standard, compliance demonstration with PM CEMS would be considered a substitute for opacity testing or opacity monitoring. Owners and operators who use PM CEMS also would be able to discontinue their monitoring of minimum wet scrubber pressure drop, horsepower or amperage. These parameter monitoring requirements were designed to ensure the scrubber continues to operate in a manner that reduces PM emissions and would not be necessary if PM is directly measured on a continuous basis. The proposed amendments incorporate the

use of PS–11 (Specifications and Test Procedures for Particulate Matter Continuous Emission Monitoring Systems at Stationary Sources) of appendix B of 40 CFR part 60 for PM CEMS and PS–11 QA Procedure 2 to ensure that PM CEMS are installed and operated properly and produce good quality monitoring data.

The proposed PM emission limits are based on data from infrequent (normally annual) stack tests and compliance would generally be demonstrated by stack tests. The use of PM CEMS for measurement and enforcement of the same emission limits must be carefully considered in relation to an appropriate averaging period for data reduction. Because PM CEMS data are unavailable for CISWI, EPA concluded that the use of a 24-hour block average was appropriate to address potential changes in PM emissions that cannot be accounted for with short term stack test data. The 24-hour block average would be calculated following procedures in EPA Method 19 of appendix A–7 of 40 CFR part 60. An owner or operator of a CISWI unit who wishes to use PM CEMS would be required to notify EPA one month before starting use of PM CEMS and one month before stopping use of the PM CEMS.

Opacity Monitors (COMS). EPA is proposing that energy recovery units that do not rely on a wet scrubber to control emissions continuously monitor opacity. EPA's understanding is that moist gas streams affect the accuracy of COMS systems; therefore these systems would not be applicable to units using wet scrubbers. If the energy recovery unit is required to monitor PM with a PM CEMS, or an owner or operator wishes to use PM CEMS, then they would not be required to also operate a COMS. Other source categories with COMS requirements require one hour block averages, which is what we are proposing for CISWI units. The proposed amendments incorporate the use of performance specification 1 of appendix B of 40 CFR part 60 for COMS.

While the proposed amendments require PM CEMS for very large energy recovery units (those over 250 MMBtu/hr), EPA is also requesting comment on the utility and practicality of requiring PM CEMS on energy recovery units of 100 MMBTU/hour design capacity or greater, as well as on waste-burning kilns and large incinerators. EPA specifically solicits comment on appropriate size thresholds for requiring PM CEMS on incinerators.

Other CEMS and Monitoring Systems. EPA also is proposing the optional use of NO_X CEMS, SO_2 CEMS, HCl CEMS, multi-metals CEMS, Hg CEMS, integrated sorbent trap Hg monitoring and integrated sorbent trap dioxin monitoring as alternatives to the existing monitoring methods for demonstrating compliance with the NO_X, SO_2, HCl, metals (Pb, Cd and Hg) and dioxin/furans emissions limits. Because CEMS data for CISWI are unavailable for all subcategories for NO_X, SO_2, HCl and metals, EPA concluded that the use of a 24-hour block average was appropriate to address potential changes in emissions of NO_X, SO_2, HCl and metals that cannot be accounted for with short term stack test data. EPA has concluded that the use of 24-hour block averages would be appropriate to address emissions variability and EPA has included the use of 24-hour block averages in the proposed rule. The 24-hour block averages would be calculated following procedures in EPA Method 19 of appendix A of 40 CFR part 60. The proposed amendments incorporate the use of performance specification 2 of appendix B of 40 CFR part 60 for NO_X CEMS. Although final performance specifications are not yet available for HCl CEMS and multi-metals CEMS, EPA is considering development of performance specifications. The proposed rule specifies that these options will be available to a facility on the date a final performance specification is published in the **Federal Register.**

The use of HCl CEMS would allow the discontinuation of HCl sorbent flow rate monitoring, scrubber liquor pH monitoring and the annual testing requirements for HCl. EPA has proposed PS–13 (Specifications and Test Procedures for Hydrochloric Acid Continuous Monitoring Systems in Stationary Sources) of appendix B of 40 CFR part 60 and expects that performance specification can serve as the basis for a performance specification for HCl CEMS use at CISWI. The procedures used in proposed PS–13 for the initial accuracy determination use the relative accuracy test, a comparison against a reference method. EPA is taking comment on an alternate initial accuracy determination procedure, similar to the one in section 11 of PS–15 (performance specification for Extractive FTIR Continuous Emissions Monitor Systems in Stationary Sources) of appendix B of 40 CFR part 60 using the dynamic or analyte spiking procedure.

EPA believes multi-metals CEMS can be used in many applications, including CISWI. EPA has monitored side-by-side evaluations of multi-metals CEMS with EPA Method 29 of appendix A–8 of 40 CFR part 60 at industrial waste incinerators and found good correlation. EPA also approved the use of multi-metals CEMS as an alternative monitoring method at hazardous waste combustors. EPA believes it is possible to adapt proposed PS–10 (Specifications and Test Procedures for Multi-metals Continuous Monitoring Systems in Stationary Sources) of appendix B of 40 CFR part 60 or other EPA performance specifications to allow the use of multi-metals CEMS at CISWI. We request comment on the appropriateness of using multi-metals CEMS instead of initial performance tests coupled with PM CEMS and other surrogates. The procedures used in proposed PS–10 for the initial accuracy determination use the relative accuracy test, a comparison against a reference method. EPA is taking comment on an alternate initial accuracy determination procedure, similar to the one in section 11 of PS–15 using the dynamic or analyte spiking procedure.

The proposed requirements for using Hg CEMS (performance specification 12A—Specifications and Test Procedures for Total Vapor Phase Mercury Continuous Emission Monitoring Systems in Stationary Sources) or integrated sorbent trap Hg monitoring system (performance specification 12B—Specifications and Test Procedures for Total Vapor Phase Mercury Continuous Emission Monitoring Systems from Stationary Sources Using a Sorbent Trap Monitoring System or appendix K of Part 75) for waste-burning kilns, and the options of using Hg CEMS or an integrated sorbent trap Hg monitoring system for other CISWI, would take effect on the date of approval of a site-specific monitoring plan. An owner or operator of a CISWI unit who wishes to use Hg CEMS would be required to notify EPA one month before starting use of Hg CEMS and one month before stopping use of the Hg CEMS. The use of multi-metals CEMS or Hg CEMS would allow the discontinuation of wet scrubber outlet flue gas temperature monitoring. Mercury sorbent flow rate monitoring could not be eliminated in favor of a multi-metals CEMS or Hg CEMS because it also is an indicator of dioxin, furans control.

The integrated sorbent trap monitoring of Hg would entail use of a continuous automated sampling system with analysis of the samples at set intervals using any suitable determinative technique that can meet appropriate criteria. The option to use a continuous automated sampling system would take effect on the date of approval of a site-specific monitoring plan. As with Hg and multi-metal

CEMS, Hg sorbent flow rate monitoring could not be eliminated in favor of integrated sorbent trap monitoring of Hg because it also is an indicator of dioxin, furans control. Additionally, there is no annual Hg test that could be eliminated, because the proposed rule does not require such a test.

The integrated sorbent trap monitoring of dioxin would entail use of a continuous automated sampling system and analysis of the sample according to EPA Reference Method 23 of appendix A–7 of 40 CFR part 60. The option to use a continuous automated sampling system would take effect on the date a final performance specification is published in the **Federal Register** or the date of approval of a site-specific monitoring plan. Integrated sorbent trap monitoring of dioxin would allow the discontinuation of fabric filter inlet temperature monitoring. Dioxin/furan sorbent flow rate monitoring could not be eliminated in favor of integrated sorbent trap monitoring of dioxin because it also is an indicator of Hg control. Additionally, there is no annual dioxin/furans test that could be eliminated, because the proposed rule does not require such a test.

If integrated sorbent trap monitoring of dioxin as well as multi-metals CEMS, Hg CEMS, or integrated sorbent trap Hg monitoring are used, Hg sorbent flow rate monitoring and dioxin/furans sorbent flow rate monitoring (in both cases activated carbon is the sorbent) could be eliminated. These parameter monitoring requirements were designed to ensure that controls continue to be operated in a manner to reduce dioxin/furans, metals and mercury emissions, and corresponding monitoring is not needed if all of these pollutants are directly measured on an ongoing basis. EPA requests comment on other parameter monitoring requirements that could be eliminated upon use of any or all of the optional CEMS discussed above. Table 11 of this preamble presents a summary of the CISWI operating parameters, the pollutants influenced by each parameter and alternative monitoring options for each parameter.

TABLE 11—SUMMARY OF CISWI OPERATING PARAMETERS, POLLUTANTS INFLUENCED BY EACH PARAMETER AND ALTERNATIVE MONITORING OPTIONS FOR EACH PARAMETER

Operating parameter/monitoring requirement (control device type)	Pollutants influenced by operating parameter	Alternative monitoring options
Maximum charge (feed) rate	All	None.
Minimum dioxin, furans sorbent flow rate (Activated carbon injection).	dioxin, furans	Integrated sorbent trap dioxin monitoring system (ISTDMS) and multi-metals CEMS, Hg CEMS or integrated sorbent trap mercury monitoring system (ISTMMS).
Minimum Hg sorbent flow rate (Activated carbon injection)	Hg.	
Minimum HCl sorbent flow rate (Dry scrubbers, spray dryers or duct sorbent injection).	HCl	HCl CEMS.
Minimum scrubber pressure drop/horsepower amperage (Wet scrubber).	PM, Cd, Pb, Hg	PM CEMS.
Minimum scrubber liquor flow rate (Wet scrubber)	HCl, PM, Cd, Pb, Hg, dioxin, furans.	HCl CEMS, PM CEMS, multi-metals CEMS, ISTDMS and ISTMMS.
Minimum scrubber liquor pH (Wet scrubber)	HCl	HCl CEMS.
Voltage and amperage of collection plates (ESP)	PM, Cd, Pb, Hg	PM CEMS.
Reagent flow rate and secondary chamber temperature (SNCR).	NO_X	NO_X CEMS.
Air pollution control device inspections	All	None.
Time of visible emissions from ash handling	PM	None.

Table 12 of this preamble presents a summary of the CISWI test methods and approved alternative compliance methods.

TABLE 12—SUMMARY OF CISWI TEST METHODS AND APPROVED ALTERNATIVE METHODS

Pollutant/parameter	Test method(s) [1]	Approved alternative method(s)	Comments
PM	Method 5, Method 29	PM CEMS	PM CEMS are optional for all sources in lieu of annual PM test (required for energy recovery units with design capacity greater than 250 MMBtu/hr).
CO	Method 10	CO CEMS	CO CEMS are optional for existing sources in lieu of annual CO test; CO CEMS are required for new sources.
HCl	Method 26 or Method 26A.	HCl CEMS	HCl CEMS are optional for all sources in lieu of annual HCl test.
Cd	Method 29	Multi-metals CEMS.	
Pb	Method 29	Multi-metals CEMS.	
Hg	Method 30B, Method 29.	Multi-metals CEMS, Hg CEMS (PS–12A), or integrated sorbent trap mercury monitoring system (PS–12 B or appendix K of Part 75).	
Dioxin, furans	Method 23	integrated sorbent trap dioxin monitoring system.	
Opacity	Method 22	Bag leak detection system or PM CEMS	Bag leak detection systems are required for units equipped with fabric filters.

TABLE 12—SUMMARY OF CISWI TEST METHODS AND APPROVED ALTERNATIVE METHODS—Continued

Pollutant/parameter	Test method(s) [1]	Approved alternative method(s)	Comments
Flue and exhaust gas analysis.	Method 3, 3A, or 3B	ASME PTC 19.10–1981 Part 10	
Opacity from ash handling.	Method 22	None	

[1] EPA Reference Methods in appendix A of 40 CFR part 60.

This proposal contains minimum data availability requirements for CEMS; generally, valid emissions data are required for a minimum of 85 percent of the hours per day, 90 percent of the hours per calendar quarter, and 95 percent of the hours per calendar year that the affected facility is operating and combusting solid waste (as that term is defined by the Administrator under RCRA). We seek comment on whether or not the rule should require valid emissions data from CEMS for all times that an affected facility is operated and on approaches to provide that data, *e.g.,* redundant CEMS, prescribed missing data procedures, owner- or operator-developed missing data procedures, or parametric monitoring.

3. Have the startup, shutdown and malfunction provisions changed?

This action also revises the provisions of the 2000 CISWI rule as it applies to periods of startup, shutdown and malfunction. This proposed revision affects all CISWI units, including units that were regulated by the 2000 CISWI rule and those units that are subject to this proposed rule. The revision of these provisions is a result of a Court decision that invalidated certain regulations related to startup, shutdown and malfunction in the General Provisions of Part 63 (*Sierra Club* v. *EPA,* 551 F.3d 1019 (D.C. Cir. 2008)). While the Court's ruling did not specifically address the legality of source category-specific SSM provisions adopted in the 2000 CISWI rule, the decision calls into question the legality of those provisions. As such, EPA is proposing to remove the exemption for SSM periods contained in the 2000 CISWI rule and the proposed emission standards summarized in this preamble would apply at all times.

We are not proposing a separate emission standard for the source categories at issue here that applies during periods of startup and shutdown. We determined that CISWI units will be able to meet the emission limits during periods of startup because most units use natural gas or clean distillate oil to start the unit and add waste once the unit has reached combustion temperatures. Emissions from burning natural gas or distillate fuel oil would generally be significantly lower than from burning solid wastes. Emissions during periods of shutdown are also generally significantly lower than emissions during normal operations because the materials in the incinerator will be almost fully combusted before shutdown occurs. Furthermore, the approach for establishing MACT floors for CISWI units ranked individual CISWI units based on actual performance for each pollutant and subcategory, with an appropriate accounting of emissions variability. Because we accounted for emissions variability and established appropriate averaging times to determine compliance with the standards, we believe we have adequately addressed any minor variability that may potentially occur during startup or shutdown.

Periods of startup, normal operations and shutdown are all predictable and routine aspects of a source's operations. However, by contrast, malfunction is defined as a "sudden, infrequent and not reasonably preventable failure of air pollution control and monitoring equipment, process equipment or a process to operate in a normal or usual manner * * *." (40 CFR 60.2). EPA has determined that malfunctions should not be viewed as a distinct operating mode and, therefore, any emissions that occur at such times do not need to be factored into development of CAA Section 129 standards, which, once promulgated, apply at all times. It is reasonable to interpret Section 129 as not requiring EPA to account for malfunctions in setting emissions standards. For example, we note that CAA Section 129 uses the concept of "best performing" sources in defining MACT, the level of stringency that major source standards must meet. Applying the concept of "best performing" to a source that is malfunctioning presents difficulties. The goal of best performing sources is to operate in such a way as to avoid malfunctions of their units. Moreover, even if malfunctions were considered a distinct operating mode, we believe it would be impracticable to take malfunctions into account in setting CAA Section 129 standards for CISWI units. As noted above, by definition, malfunctions are sudden and unexpected events and it would be difficult to set a standard that takes into account the myriad different types of malfunctions that can occur across all sources. Finally, malfunctions can vary in frequency, degree and duration, further complicating standard setting.

For a source that fails to comply with the applicable CAA Section 129 standards as a result of a malfunction event, EPA would determine an appropriate response based on, among other things, the good faith efforts of the source to minimize emissions during malfunction periods, including preventative and corrective actions, as well as root cause analyses to ascertain and rectify excess emissions. EPA would also consider whether the source's failure to comply with the CAA Section 129 standard was, in fact, "sudden, infrequent, not reasonably preventable" and was not instead "caused in part by poor maintenance or careless operation." (40 CFR 60.2 (definition of malfunction)).

4. Delegation of Authority To Implement and Enforce These Provisions

We are proposing clarifications to the authorities that can be delegated or transferred to state, local and tribal air pollution control agencies in this rulemaking. In the past, there has been some confusion about what authorities can be delegated and exercised by state, local and tribal air pollution control agencies and which authorities must be retained by EPA. In some cases, state, local and tribal air pollution control agencies were making decisions, such as allowing waivers of some provisions of this subpart that cannot be delegated to those agencies. There is a list of authorities that must be retained by EPA in 40 CFR 60.2530. To this list, we propose to add the approval of alternative opacity emission limits referenced in 60.2105 which, in turn refer to general provisions in 60.11(e) and the approval of performance test and data reduction waivers under 40 CFR 60.8(b). These authorities may affect the stringency of the emissions standards or limitations which can only

be amended by Federal rulemaking, thus they cannot be transferred to State, local or tribal air pollution control agencies. We are also adding 40 CFR 60.2542 to make the provisions regarding the implementation and enforcement authorities in both subparts CCCC and DDDD consistent. We are seeking comment on whether these or other authorities should be retained by EPA or delegated to State, local or tribal air pollution control agencies.

5. State Plans

We are proposing regulatory language to clarify how states and eligible tribes can fulfill their obligation under CAA Section 129(b)(2) in lieu of submitting a state plan for review and approval. We are adding 40 CFR 60.2541 that will clarify how states and eligible tribes can fulfill the obligation under Section 129(b)(2) by submitting an acceptable, as specified in 40 CFR 60.2541, written request for delegation of the Federal plan. Proposed 40 CFR 60.2541 lists specific requirements, such as a demonstration of adequate resources and legal authority to implement and enforce the Federal plan that must be met in order to receive delegation of the Federal plan. We are seeking comment on this provision.

V. Impacts of the Proposed Action

A. What are the primary air impacts?

We have estimated the potential emissions reductions from existing sources that may be realized through implementation of the proposed emission limits. However, we realize that some CISWI owners and operators are likely to determine that alternatives to waste incineration are viable, such as sending the waste to a landfill or MWC, if available. In fact, sources operating incinerators, burn-off ovens and small, remote incinerators, where energy recovery is not a goal, may find it most cost-effective to discontinue use of their CISWI unit altogether. Therefore, we have estimated emissions reductions attributable to existing sources complying with the proposed limits, as well as those reductions that would occur if the facilities with incinerators, burn-off ovens and small, remote incinerators decide to discontinue the use of their CISWI unit and use alternative waste disposal options.

For units combusting wastes for energy production, such as energy recovery units and waste-burning kilns, the decision to combust or not to combust waste will depend on several factors. One factor is the cost to replace the energy provided by the waste material with a traditional fuel, such as natural gas. Another factor would be whether the owner or operator is purchasing the waste or obtaining it at no cost from other generators, or if they are generating the waste on-site and will have to dispose of the materials in another fashion, such as landfills. Lastly, these units would have to compare the control requirements needed to meet the CISWI emission limits with those needed if they stop burning solid waste and are then subject to a NESHAP instead. As mentioned before, we have attempted to align the monitoring requirements for similar non-waste burning sources as closely as possible in an effort to make them consistent and to help sources make the cross-walk between waste and non-waste regulatory requirements as simple as possible.

The emissions reductions that would be achieved under this proposed rule using the concurrently proposed definition of solid waste under RCRA are presented in Table 13 of this preamble.

TABLE 13—EMISSIONS REDUCTIONS FOR MACT COMPLIANCE AND ALTERNATIVE DISPOSAL OPTIONS FOR EXISTING CISWI USING THE "PRIMARY APPROACH" EMISSION LIMITS CONCURRENTLY PROPOSED UNDER RCRA

Pollutant	Reductions achieved through meeting MACT (ton/yr)	Reductions achieved assuming incinerators, small, remote incinerators and burn-off ovens use alternative disposal (ton/yr) [a]
HCl	525	558
CO	23,610	23,570
Pb	5.9	6.0
Cd	5.4	5.4
Hg	0.13	0.14
PM (filterable)	1,720	1,760
Dioxin, furans	0.0002	0.00025
NO_X	1,260	1,450
SO_2	2,640	2,660
Total	29,770	30,000

[a] The estimated emission reduction does not account for any secondary impacts associated with alternate disposal of diverted energy recovery unit fuel.

As discussed earlier in this preamble, there is an "alternative approach" identified for consideration and comment in a concurrent notice under RCRA. The potential emissions reductions based on this "alternative approach" are presented in Table 14 of this preamble.

TABLE 14—POTENTIAL EMISSIONS REDUCTIONS FOR MACT COMPLIANCE AND ALTERNATIVE DISPOSAL OPTIONS FOR EXISTING CISWI USING POTENTIAL EMISSION LIMITS BASED ON THE "ALTERNATIVE APPROACH" IDENTIFIED FOR CONSIDERATION AND COMMENT IN A CONCURRENT NOTICE UNDER RCRA

Pollutant	Reductions achieved through meeting MACT (ton/yr)	Reductions achieved assuming incinerators, small, remote incinerators and burn-off ovens use alternative disposal (ton/yr) [a]
HCl	395	429
CO	128,120	128,070
Pb	3.4	3.4
Cd	4.2	4.3
Hg	1.2	1.2
PM (filterable)	19,280	19,320
Dioxin, furans	0.00003	0.00009
NO_X	341	522
SO_2	184	205
Total	148,330	148,560

[a] The estimated emission reduction does not account for any secondary impacts associated with alternate disposal of diverted energy recovery unit fuel.

Based on the results of our analysis for existing units and our experiences with other CAA Section 129 regulations, we do not anticipate that any new CISWI units will be constructed. As discussed earlier, many existing CISWI owners and operators may find that alternate disposal options are preferable to compliance with the proposed standards. Our experience with regulations for municipal waste combustors, HMIWI and, in fact, CISWI has shown that negative growth in the source category historically occurs upon implementation of CAA Section 129 standards. Since CISWI rules were promulgated in 2000 and have been in effect for existing sources since 2005, many existing units have closed. At promulgation in 2000, EPA estimated 122 units in the CISWI population. In comparison, the incinerator subcategory in this proposal, which would contain any such units subject to the 2000 CISWI rule, has 28 units. EPA is not aware of any construction of new units since 2000, so we do not believe there are any units that are currently subject to the 2000 CISWI NSPS. The revised CISWI rule is more stringent, so we expect this trend to continue. We would also expect the same to be true for the subcategories of units that would be newly affected by the proposed revised CISWI rules. Industrial or commercial operations considering waste disposal options for their facilities will likely choose not to construct new CISWI units and to use alternative waste disposal methods or alternative fuels that will not subject them to the CISWI rule. For example, tire-derived fuel from which the metal has been removed is not considered solid waste under the proposed definition of solid waste. Consequently, new cement kiln owners will assess their regulatory requirements under CISWI for burning whole tires or tire-derived fuel that does not have metals removed against the costs associated with removing the metal and complying with the applicable NESHAP instead of the CISWI rule. Our research suggests that metal removal is routinely practiced and would most likely be a viable option for new kiln owners so that they would not be subject to the CISWI regulations. Likewise, new sources could engineer their process to minimize waste generation in the first place, or to separate wastes so that the materials sent to a combustion unit would not meet the definition of solid waste to begin with. For waste that is generated, cost analyses have found that alternative waste disposal is generally available and less expensive. However, we request comment on whether new sources will likely be constructed. In case a facility deems waste combustion a suitable option and constructs a new CISWI unit, we have developed model CISWI unit emissions reduction estimates for each subcategory using the existing unit baseline and the new source emission limits. Table 15 of this preamble presents the model plant emissions reductions that would be expected for new sources.

TABLE 15—EMISSIONS REDUCTIONS ON A MODEL PLANT BASIS

Pollutant	Emission reduction for CISWI subcategory model Units (ton/yr unless otherwise noted)				
	Incinerator	Burn-off oven	Small, remote incinerator	Energy recovery unit	Waste-burning kiln
HCl	0.9	0.1	0.0	13.3	0.1
CO	1.0	0.5	0.3	597	1,844
Pb	0.04	0.0	0.0002	0.1	0.02
Cd	0.009	0.0	0.001	0.005	0.1
Hg	0.003	0.0	0.000002	0.002	0.0
PM (filterable)	3.4	0.1	0.0	46.3	0.0
Dioxin/furan (total mass)[1]	0.0	0.0	0.003	0.01	0.001
NO_X	9.6	0.8	0.0	133.9	1,242

TABLE 15—EMISSIONS REDUCTIONS ON A MODEL PLANT BASIS—Continued

Pollutant	Emission reduction for CISWI subcategory model Units (ton/yr unless otherwise noted)				
	Incinerator	Burn-off oven	Small, remote incinerator	Energy recovery unit	Waste-burning kiln
SO_2	6.8	0.1	0.0	60.2	115
Total	21.8	1.67	0.3	851	3,202

[1] Dioxin/furan estimates are given in lb/yr.

B. What are the water and solid waste impacts?

We anticipate affected sources will need to apply additional controls to meet the proposed emission limits. These controls may utilize water, such as wet scrubbers, which would need to be treated. We estimate an annual requirement of 68 million gallons per year of additional wastewater would be generated as a result of operating additional controls or increased sorbent use.

Likewise, the addition of PM controls or improvements to controls already in place will increase the amount of particulate collected that will require disposal. Furthermore, activated carbon injection may be utilized by some sources, which will result in additional solid waste needing disposal. The annual amounts of solid waste that would require disposal are anticipated to be approximately 1,760 tons/yr from PM capture and 10,860 tons/yr from activated carbon injection.

Perhaps the largest impact on solid waste would come from owners and operators who decide to discontinue the use of their CISWI unit and instead send waste to the landfill or MWC for disposal. Based on tipping fees and availability, we would expect most, if not all, of this diverted waste to be sent to a local landfill. As we discuss above, it may be that a good portion of the incinerators, burn-off ovens and small, remote incinerators would determine that alternative disposal is a better choice than compliance with the proposed standards. If this were the case for all of the units in these subcategories, we estimate that approximately 214,000 tons per year of waste would be diverted to a landfill.

As mentioned above, we do not anticipate any new CISWI units to be constructed. Therefore, there would be no water or solid waste impacts associated with controls for new units.

C. What are the energy impacts?

The energy impacts associated with meeting the proposed emission limits would consist primarily of additional electricity needs to run added or improved air pollution control devices. For example, increased scrubber pump horsepower may cause slight increases in electricity consumption and sorbent injection controls would likewise require electricity to power pumps and motors. By our estimate, we anticipate that an additional 271,455 MW-hours per year would be required for the additional and improved control devices.

As discussed earlier, there could be instances where owners and operators of energy recovery units and waste-burning kilns decide to cease burning waste materials. In these cases, the energy provided by the burning of waste would need to be replaced with a traditional fuel, such as natural gas. Assuming an estimate that 50 percent of the energy input to energy recovery units and kilns are from waste materials, an estimate of the energy that would be replaced with a traditional fuel if all existing units stopped burning waste materials, is approximately 56 TBtu/yr. Since we do not anticipate any new CISWI units to be constructed, there would be no energy impacts associated with control of new units.

D. What are the secondary air impacts?

For CISWI units adding controls to meet the proposed emission limits, we anticipate very minor secondary air impacts, comprising emissions from electric generating units needed to provide the electricity to power the emission control devices.

As discussed earlier, we believe it likely that the incinerators, burn-off ovens and small, remote incinerators may elect to discontinue the use of their CISWI unit and send the waste to the landfill or other disposal means. As we discussed in the solid waste impacts above, this could result in approximately 214,000 tons per year of waste going to landfills. By using EPA's Landfill Gas Estimation Model, we estimate that, over the 20-year expected life of a CISWI unit, the resulting methane generated by a landfill receiving the waste would be about 187,000 tons. If this landfill gas were combusted in a flare, assuming typical flare emission factors and landfill gas chlorine, Hg and sulfur concentrations, the following emissions would be expected: 38 tons of PM; 16 tons of HCl; 32 tons of SO_2; 1,724 tons of CO; 90 tons of NO_X; and about 3 lbs of Hg.

Here again, since we do not anticipate any new CISWI units, we do not expect any secondary air impacts associated with control of new units.

E. What are the cost and economic impacts?

We have estimated compliance costs for all existing units to add the necessary controls and monitoring equipment, and to implement the inspections, recordkeeping and reporting requirements to comply with the proposed CISWI standards. We have also analyzed the costs of alternative disposal for the subcategories that may have alternative options to burning waste, specifically for the incinerators, burn-off ovens and small, remote incinerators. In our analysis, we have selected the lowest cost alternative (*i.e.,* compliance or alternative disposal) for each facility. Based on this analysis, we anticipate an overall total capital investment of $574 million with an associated total annual cost of $216 million.

Under the proposed rule, EPA's economic model suggests the average national market-level variables (prices, production-levels, consumption, international trade) will not change significantly (*e.g.,* are less than 0.01 percent).

EPA performed a screening analysis for impacts on small entities by comparing compliance costs to sales/revenues (*e.g.,* sales and revenue tests). EPA's analysis found the tests were below 1 percent for small entities included in the screening analysis.

We do not anticipate any new CISWI units to be constructed. Therefore, we do not anticipate any costs associated with control of new units.

F. What are the benefits?

We estimated the monetized benefits of this proposed regulatory action to be $240 million to $580 million (2008$, 3 percent discount rate) in the implementation year (2015). The

monetized benefits of the proposed regulatory action at a 7 percent discount rate are $210 million to $520 million (2008$). Using alternate relationships between $PM_{2.5}$ and premature mortality supplied by experts, higher and lower benefits estimates are plausible, but most of the expert-based estimates fall between these two estimates.[9] A summary of the monetized benefits estimates at discount rates of 3 percent and 7 percent is in Table 16 of this preamble.

TABLE 16—SUMMARY OF THE MONETIZED BENEFITS ESTIMATES FOR THE CISWI NSPS AND EG IN 2015

[millions of 2008$][1]

	Estimated emissions reductions (tons per year)	Total monetized benefits (3% discount rate)	Total monetized benefits (7% discount rate)
$PM_{2.5}$	660	$150 to $370	$140 to $330.
$PM_{2.5}$ Precursors			
SO_2	2,659	$78 to $190	$71 to $170.
NO_X	1,447	$7.0 to $17	$6.4 to $16.
Total		$240 to $580	$210 to $520.

[1] All estimates are for the implementation year (2015), and are rounded to two significant figures. All fine particles are assumed to have equivalent health effects, but the benefit-per-ton estimates vary between precursors because each ton of precursor reduced has a different propensity to form $PM_{2.5}$. The monetized benefits from reducing 24,000 tons of carbon monoxide, 560 tons of hydrochloric acid, 5.4 tons of cadmium, 6.0 tons of lead, 280 pounds of mercury, and 230 grams of total dioxins/furans, each year are not included in these estimates. In addition, the monetized benefits from reducing ecosystem effects and visibility impairment are not included.

These benefits estimates represent the total monetized human health benefits for populations exposed to less $PM_{2.5}$ in 2015 from controls installed to reduce air pollutants in order to meet these standards. These estimates are calculated as the sum of the monetized value of avoided premature mortality and morbidity associated with reducing a ton of $PM_{2.5}$ and $PM_{2.5}$ precursor emissions. To estimate human health benefits derived from reducing $PM_{2.5}$ and $PM_{2.5}$ precursor emissions, we utilized the general approach and methodology established in Fann et al. (2009).[10]

To generate the benefit-per-ton estimates, we used a model to convert emissions of direct $PM_{2.5}$ and $PM_{2.5}$ precursors into changes in ambient $PM_{2.5}$ levels and another model to estimate the changes in human health associated with that change in air quality. Finally, the monetized health benefits were divided by the emissions reductions to create the benefit-per-ton estimates. Even though we assume that all fine particles have equivalent health effects, the benefit-per-ton estimates vary between precursors because each ton of precursor reduced has a different propensity to form $PM_{2.5}$. For example, SO_X has a lower benefit-per-ton estimate than direct $PM_{2.5}$ because it does not form as much $PM_{2.5}$, thus the exposure would be lower and the monetized health benefits would be lower.

For context, it is important to note that the magnitude of the PM benefits is largely driven by the concentration response function for premature mortality. Experts have advised EPA to consider a variety of assumptions, including estimates based both on empirical (epidemiological) studies and judgments elicited from scientific experts, to characterize the uncertainty in the relationship between $PM_{2.5}$ concentrations and premature mortality. For this proposed rule, we cite two key empirical studies, one based on the American Cancer Society cohort study[11] and the extended Six Cities cohort study[12]. In the Regulatory Impact Analysis (RIA) for this proposed rule, which is available in the docket, we also include benefits estimates derived from expert judgments and other assumptions.

This analysis does not include the type of detailed uncertainty assessment found in the 2006 $PM_{2.5}$ NAAQS RIA because we lack the necessary air quality input and monitoring data to run the benefits model. However, the 2006 $PM_{2.5}$ NAAQS benefits analysis[13] provides an indication of the sensitivity of our results to various assumptions.

It should be emphasized that the monetized benefits estimates provided above do not include benefits from several important benefit categories, including reducing other air pollutants, ecosystem effects and visibility impairment. The benefits from reducing carbon monoxide and HAP have not been monetized in this analysis, including reducing 29,000 tons of CO, 590 tons of hydrochloric acid, 5.4 tons of Cd, 6.0 tons of lead and 280 pounds of Hg each year. Although we do not have sufficient information or modeling available to provide monetized estimates for this rulemaking, we include a qualitative assessment of the effects associated with these air pollutants in the RIA for this proposed rule, which is available in the docket.

The costs of this proposed rulemaking are estimated to be $216 million (2008$) in the implementation year and the monetized benefits are $240 million to $580 million (2008$, 3 percent discount rate) for that same year. The benefits at a 7 percent discount rate are $210 million to $520 billion (2008$). Thus, net benefits of this rulemaking are estimated at $19 million to $360 million (2008$, 3 percent discount rate) and $ − 2.4 million to $310 million (2008$, 7 percent discount rate). A summary of the monetized benefits, social costs and net benefits at discount rates of 3 percent and 7& is in Table 17 of this preamble.

[9] Roman et al, 2008. "Expert Judgment Assessment of the Mortality Impact of Changes in Ambient Fine Particulate Matter in the U.S." *Environ. Sci. Technol.,* 42, 7, 2268–2274.

[10] Fann, N., C.M. Fulcher, B.J. Hubbell. 2009. "The influence of location, source, and emission type in estimates of the human health benefits of reducing a ton of air pollution." *Air Qual Atmos Health* (2009) 2:169–176.

[11] Pope *et al.,* 2002. "Lung Cancer, Cardiopulmonary Mortality, and Long-term Exposure to Fine Particulate Air Pollution." Journal of the American Medical Association 287:1132–1141.

[12] Laden *et al.,* 2006. "Reduction in Fine Particulate Air Pollution and Mortality." *American Journal of Respiratory and Critical Care Medicine.* 173: 667–672.

[13] U.S. Environmental Protection Agency, 2006. Final Regulatory Impact Analysis: $PM_{2.5}$ NAAQS. Prepared by Office of Air and Radiation. October. Available on the Internet at *http://www.epa.gov/ttn/ecas/ria.html.*

TABLE 17—SUMMARY OF THE MONETIZED BENEFITS, SOCIAL COSTS, AND NET BENEFITS FOR THE CISWI NSPS AND EG IN 2015

[millions of 2008$][1]

	3% Discount rate	7% Discount rate
Proposed Option		
Total Monetized Benefits[2]	$240 to $580	$210 to $520.
Total Social Costs[3]	$220	$220.
Net Benefits	$19 to $360	$−2.4 to $310.
Non-monetized Benefits.	24,000 tons of carbon monoxide. 560 tons of HCl. 5.4 tons of cadmium. 6.0 tons of lead. 280 pounds of mercury. 230 grams of total dioxins/furans. Health effects from NO_2 and SO_2 exposure. Ecosystem effects. Visibility impairment.	
Proposed Option with Alternate Solid Waste Definition		
Total Monetized Benefits[2]	$2,700 to $6,700	$2,500 to $6,000.
Total Social Costs[3]	$480	$480.
Net Benefits	$2,300 to $6,200	$2,000 to $5,600.
Non-monetized Benefits.	130,000 tons of carbon monoxide. 430 tons of HCl. 4.3 tons of cadmium. 3.4 tons of lead. 1.2 tons of mercury. 85 grams of total dioxins/furans Health effects from NO_2 and SO_2 exposure. Ecosystem effects. Visibility impairment.	

[1] All estimates are for the implementation year (2015), and are rounded to two significant figures.
[2] The total monetized benefits reflect the human health benefits associated with reducing exposure to $PM_{2.5}$ through reductions of directly emitted $PM_{2.5}$ and $PM_{2.5}$ precursors such as NO_X and SO_2. It is important to note that the monetized benefits include many but not all health effects associated with $PM_{2.5}$ exposure.
[3] The methodology used to estimate social costs for one year in the multimarket model using surplus changes results in the same social costs for both discount rates.

For more information on the benefits analysis, please refer to the RIA for this rulemaking, which is available in the docket.

VI. Relationship of the Proposed Action to Section 112(c)(6) of the CAA

Section 112(c)(6) of the CAA requires EPA to identify categories of sources of seven specified pollutants to assure that sources accounting for not less than 90 percent of the aggregate emissions of each such pollutant are subject to standards under CAA Section 112(d)(2) or 112(d)(4). EPA has identified CISWI as a source category that emits five of the seven CAA Section 112(c)(6) pollutants: polycyclic organic matter (POM), dioxins, furans, Hg and polychlorinated biphenyls (PCBs) (The POM emitted by CISWI is composed of seven polyaromatic hydrocarbons (7–PAH), 16 polyaromatic hydrocarbons (16–PAH) and extractable organic matter (EOM)). In the **Federal Register** notice *Source Category Listing for Section 112(d)(2) Rulemaking Pursuant to Section 112(c)(6) Requirements,* 63 FR 17838, 17849, Table 2 (1998), EPA identified source categories "subject to regulation" for purposes of CAA Section 112(c)(6) with respect to the CAA Section 112(c)(6) pollutants that CISWI emit. CISWI are solid waste incineration units currently regulated under CAA Section 129 and this proposal would subject additional sources to regulation under CAA Section 129. For purposes of CAA Section 112(c)(6), EPA has determined that standards promulgated under CAA Section 129 are substantively equivalent to those promulgated under CAA Section 112(d). (See *Id.* at 17845; see also 62 FR 33625, 33632 (1997).) As discussed in more detail below, the CAA Section 129 standards effectively control emissions of the five identified CAA Section 112(c)(6) pollutants. Further, since CAA Section 129(h)(2) precludes EPA from regulating these substantial sources of the five identified CAA Section 112(c)(6) pollutants under CAA Section 112(d), EPA cannot further regulate these emissions under that CAA Section. As a result, EPA considers emissions of these five pollutants from CISWI "subject to standards" for purposes of CAA Section 112(c)(6).

As required by the statute, the CAA Section 129 CISWI standards include numeric emission limitations for the nine pollutants specified in CAA Section 129(a)(4). The combination of waste segregation, good combustion practices and add-on air pollution control equipment (sorbent injection, fabric filters, wet scrubbers, or combinations thereof) effectively reduces emissions of the pollutants for which emission limits are required under CAA Section 129: Hg, dioxins,

furans, Cd, Pb, PM, SO_2, HCl, CO and NO_X. Thus, the standards specifically require reduction in emissions of three of the CAA Section 112(c)(6) pollutants: dioxins, furans and Hg. As explained below, the air pollution controls necessary to comply with the requirements of the CISWI standards also effectively reduce emissions of the following CAA Section 112(c)(6) pollutants that are emitted from CISWI: POM and PCBs. Although the CAA Section 129 CISWI standards do not have separate, specific emissions standards for POM and PCBs, emissions of these two CAA Section 112(c)(6) pollutants are effectively controlled by the same control measures used to comply with the numerical emissions limits for the pollutants enumerated in CAA Section 129(a)(4). Specifically, as by-products of combustion, the formation of POM and PCBs is effectively reduced by the combustion and post-combustion practices required to comply with the CAA Section 129 standards. Any POM and PCBs that do form during combustion are further controlled by the various post-combustion CISWI controls. The add-on PM control systems (either fabric filter or wet scrubber) and activated carbon injection further reduce emissions of these organic pollutants and also reduce Hg emissions, as is evidenced by performance data for MWCs and another similar source category, HMIWI. Specifically, the post-MACT compliance tests at currently operating HMIWI that were also operational at the time of promulgation of the 1997 HMIWI MACT standards show that, for those units, the regulations reduced Hg emissions by about 60 percent and reduced dioxin and furans emissions by about 80 percent from pre-MACT levels. Moreover, similar controls have been demonstrated to effectively reduce emissions of POM and PCBs from MWCs. It is, therefore, reasonable to conclude that POM and PCB emissions would be substantially controlled at all CISWI units meeting the proposed emission limits. Thus, while the proposed rule does not identify specific numerical limits for POM and PCB, emissions of those pollutants are, for the reasons noted above, nonetheless "subject to regulation" for purposes of CAA Section 112(c)(6) of the CAA.

VII. Statutory and Executive Order Reviews

A. Executive Order 12866: Regulatory Planning and Review

Under Executive Order 12866 (58 FR 51735; October 4, 1993), this action is a "significant regulatory action" because it will have an annual effect on the economy of $100 million or more. Accordingly, EPA submitted this action to the OMB for review under Executive Order 12866, and any changes made in response to OMB recommendations have been documented in the docket for this action. For information regarding the costs and benefits of this rule, please refer to Table 17 of this preamble.

B. Paperwork Reduction Act

The information collection requirements in this rule have been submitted for approval to the OMB under the Paperwork Reduction Act, 44 U.S.C. 3501 *et seq.* The ICR documents prepared by EPA have been assigned EPA ICR number 2384.01 for subpart CCCC, 40 CFR part 60 and 2385.01 for subpart DDDD, 40 CFR part 60.

The requirements in this proposed action result in industry recordkeeping and reporting burden associated with review of the amendments for all CISWI, and inspections of scrubbers, fabric filters and other air pollution control devices that may be used to meet the emission limits for all CISWI. Ongoing parametric monitoring requirements for ESPs, SNCR, activated carbon injection are also required of all CISWI units. Stack testing and development of new parameter limits would be necessary for CISWI that need to make performance improvements in order to meet the proposed emission limits and for CISWI that, prior to this proposed action, have not been required to demonstrate compliance with certain pollutants. Visual emissions tests would be required for all subcategories except waste-burning kilns on an annual basis. Energy recovery units would be required to continuously monitor opacity, and units larger than 250 MMBtu/hr would be required to monitor PM emissions using a PM CEMS. Waste-burning kilns would be required to continuously monitor Hg emissions using a Hg CEMS. Any new CISWI would also be required to continuously monitor CO emissions. The annual average burden associated with recordkeeping and reporting requirements for the EG over the first three years following promulgation of this proposed action is estimated to be 12,591 hours at a total annual labor cost of $498,230. The total annualized capital/startup costs and operation and maintenance (O&M) costs associated with the EG monitoring requirements, EPA Method 22 of appendix A–7 testing, initial stack testing, storage of data and reports and photocopying and postage over the three-year period of the ICR are estimated at $25,509,408 and $8,503,136 per year, respectively. (The annual inspection costs are included under the recordkeeping and reporting labor costs.) The annual average burden associated with the NSPS over the first three years following promulgation of this proposed action is estimated to be 0 hours at a total annual labor cost of $0, since we anticipate no new CISWI units to be constructed. Burden is defined at 5 CFR 1320.3(b).

An Agency may not conduct or sponsor, and a person is not required to respond to a collection of information unless it currently displays a valid OMB control number. The OMB control numbers for EPA's regulations are listed in 40 CFR part 9.

To comment on the EPA's need for this information, the accuracy of the provided burden estimates and any suggested methods for minimizing respondent burden, EPA has established a public docket for this action, which includes these ICR documents, under Docket ID No. EPA–HQ–OAR–2003–0119. Submit any comments related to the ICR documents for this proposed action to EPA and OMB. *See* **ADDRESSES** section at the beginning of this action for where to submit comments to EPA. Send comments to OMB at the Office of Information and Regulatory Affairs, Office of Management and Budget, 725 17th Street, NW., Washington, DC 20503, Attention: Desk Office for EPA. Since OMB is required to make a decision concerning the ICR between 30 and 60 days after June 4, 2010, a comment to OMB is best assured of having its full effect if OMB receives it by July 6, 2010. The final rule will respond to any OMB or public comments on the information collection requirements contained in this proposal.

C. Regulatory Flexibility Act

The Regulatory Flexibility Act (RFA) generally requires an agency to prepare a regulatory flexibility analysis of any rule subject to notice and comment rulemaking requirements under the Administrative Procedures Act or any other statute unless the Agency certifies that the proposed action will not have a significant economic impact on a substantial number of small entities. Small entities include small businesses, small government organizations and small government jurisdictions.

For purposes of assessing the impacts of this proposed action on small entities, small entity is defined as: (1) A small business as defined by the Small Business Administration's (SBA) regulations at 13 CFR 121.201; (2) a small governmental jurisdiction that is a government of a city, county, town, school district or special district with a population of less than 50,000; or (3) a

small organization that is any not-for-profit enterprise that is independently owned and operated and is not dominant in its field.

After considering the economic impacts of this proposed rule on small entities, I certify that this action will not have a significant economic impact on a substantial number of small entities. The small entities directly regulated by this proposed rule are facilities engaged in industrial or commercial operations, such as paper and paperboard manufacturing and utility providers. The average cost-to-sales ratios for small companies are below 1 percent. The median ratios are less than 0.1 percent. Only one entity has a sales test that exceeds 3 percent and that unit provides wood-residue, natural gas-fired cogeneration (NAICS 221).

Although this proposed rule will not have a significant economic impact on a substantial number of small entities, EPA nonetheless has tried to reduce the impact of this rule on small entities. We continue to be interested in the potential impacts of the proposed rule on small entities and welcome comments on issues related to such impacts. We invite comments on all aspects of the proposal and its impacts on small entities.

D. Unfunded Mandates Reform Act

Title II of the Unfunded Mandates Reform Act of 1995 (UMRA), 2 U.S.C. 1531–1538, requires Federal agencies, unless otherwise prohibited by law, to assess the effects of their regulatory actions on State, local and tribal governments and the private sector. This rule contains a Federal mandate that may result in expenditures of $100 million or more for State, local and tribal governments, in the aggregate, or the private sector in any one year. Accordingly, EPA has prepared under Section 202 of the UMRA a written statement which is summarized below.

1. Statutory Authority

As discussed previously in this preamble, the statutory authority for the proposed rule is Section 129 of the CAA. CAA Section 129 CISWI standards include numeric emissions limitations for the nine pollutants specified in CAA Section 129(a)(4). Section 129(a)(2) of the CAA directs EPA to develop standards based on MACT, which require existing and new major sources to control emissions of the nine pollutants.

In compliance with Section 205(a), we identified and considered a reasonable number of regulatory alternatives. The regulatory alternative upon which the rule is based is the least costly, most cost-effective alternative to achieve the statutory requirements of CAA Section 129.

2. Social Costs and Benefits

The RIA prepared for the proposed rule, including the EPA's assessment of costs and benefits, is detailed in the "Regulatory Impact Analysis: Standards of Performance for New Stationary Sources and Emission Guidelines for Existing Sources: Commercial and Industrial Solid Waste Incineration Units" in the docket. Based on estimated compliance costs on all sources associated with the proposed rule and the predicted change in prices and production in the affected industries, the estimated social costs of the proposed rule are $216 million (2008 dollars). In the year of full implementation (2015), EPA estimates the monetized $PM_{2.5}$ benefits of the proposed NSPS and EG are $240 million to $580 million and $210 million to $520 million, at 3 percent and 7 percent discount rates respectively. All estimates are in 2008$. Using alternate relationships between $PM_{2.5}$ and premature mortality supplied by experts, higher and lower benefits estimates are plausible, but most of the expert-based estimates fall between these estimates. The benefits from reducing other air pollutants have not been monetized in this analysis, including reducing 24,000 tons of CO, 560 tons of HCl, 6 tons of Pb, 5.4 tons of Cd, 280 pounds of Hg, and 230 grams of total dioxins and furans each year. In addition, ecosystem benefits and visibility benefits have not been monetized in this analysis.

Exposure to CO can affect the cardiovascular system and the central nervous system. Emissions of NO_X can transform into PM, which can result in fatalities and many respiratory problems (such as asthma or bronchitis); and NO_X can also transform into ozone causing several respiratory problems to affected populations.

The net benefits for the NSPS and Emission Guidelines are $19 million to $360 million and −$2.4 million to $310 million, at 3 percent and 7 percent discount rates respectively. All estimates are in 2008$.

3. Future and Disproportionate Costs

The UMRA requires that we estimate, where accurate estimation is reasonably feasible, future compliance costs imposed by the rule and any disproportionate budgetary effects. Our estimates of the future compliance costs of the proposed rule are discussed previously in this preamble. We do not believe that there will be any disproportionate budgetary effects of the proposed rule on any particular areas of the country, State or local governments, types of communities (*e.g.,* urban, rural), or particular industry segments.

4. Effects on the National Economy

The UMRA requires that we estimate the effect of the proposed rule on the national economy. To the extent feasible, we must estimate the effect on productivity, economic growth, full employment, creation of productive jobs and international competitiveness of the U.S. goods and services if we determine that accurate estimates are reasonably feasible and that such effect is relevant and material. The nationwide economic impact of the proposed rule is presented in the "Regulatory Impact Analysis: Standards of Performance for New Stationary Sources and Emission Guidelines for Existing Sources: Commercial and Industrial Solid Waste Incineration Units" in the docket. This analysis provides estimates of the effect of the proposed rule on most of the categories mentioned above. The results of the economic impact analysis were summarized previously in this preamble.

5. *Consultation With Government Officials*

The UMRA requires that we describe the extent of EPA's prior consultation with affected State, local and tribal officials, summarize the officials' comments or concerns and summarize our response to those comments or concerns. We have determined that the proposed rule contains no regulatory requirements that might significantly or uniquely affect small governments. Therefore, this rule is not subject to the requirements of Section 203 of the UMRA.

E. Executive Order 13132: Federalism

Executive Order 13132 (64 FR 43255; August 10, 1999), requires EPA to develop an accountable process to ensure "meaningful and timely input by State and local officials in the development of regulatory policies that have federalism implications." "Policies that have federalism implications" are defined in the Executive Order to include regulations that have "substantial direct effects on the States, on the relationship between the national government and the States, or on the distribution of power and responsibilities among the various levels of government."

This proposed rule does not have federalism implications. It will not have substantial direct effects on the States, on the relationship between the national

government and the States, or on the distribution of power and responsibilities among the various levels of government, as specified in Executive Order 13132. This proposed action will not impose substantial direct compliance costs on State or local governments and will not preempt State law. Thus, Executive Order 13132 does not apply to this rule.

In the spirit of Executive Order 13132 and consistent with EPA policy to promote communications between EPA and State and local governments, EPA specifically solicits comment on this proposed rule from State and local officials.

F. Executive Order 13175: Consultation and Coordination With Indian Tribal Governments

This action does not have tribal implications, as specified in Executive Order 13175, (65 FR 67249; November 9, 2000). EPA is not aware of any CISWI in Indian country or owned or operated by Indian tribal governments. Thus, Executive Order 13175 does not apply to this action.

However, EPA specifically solicits additional comment on this proposed action from tribal officials and will conduct outreach to tribal environmental professionals in the proposal period via the National Tribal Air Association and other mechanisms.

G. Executive Order 13045: Protection of Children From Environmental Health and Safety Risks

EPA interprets Executive Order 13045 (62 FR 19885; April 23, 1997) as applying to those regulatory actions that concern health or safety risks, such that the analysis required under Section 5–501 of the Order has the potential to influence the regulation. This proposed action is not subject to Executive Order 13045 because it is based solely on technology performance.

H. Executive Order 13211: Actions That Significantly Affect Energy Supply, Distribution or Use

This action is not a "significant energy action" as defined in Executive Order 13211 (66 FR 28355; May 22, 2001) because it is not likely to have a significant adverse effect on the supply, distribution, or use of energy. EPA estimates that the requirements in this proposed action would cause most CISWI in the energy recovery unit and waste-burning kiln subcategories to modify existing air pollution control devices (*e.g.,* increase the horsepower of their wet scrubbers) or install and operate new control devices, resulting in approximately 271,455 megawatt-hours per year of additional electricity being used. EPA estimates that many owners of CISWI units in the incinerator, burn-off oven and small, remote incinerator subcategories may stop operating CISWI units and use alternative waste disposal methods, thereby not requiring additional energy input for operation of control devices.

Given the negligible change in energy consumption resulting from this proposed action, EPA does not expect any significant price increase for any energy type. The cost of energy distribution should not be affected by this proposed action at all since the action would not affect energy distribution facilities. We also expect that any impacts on the import of foreign energy supplies, or any other adverse outcomes that may occur with regard to energy supplies would not be significant. We, therefore, conclude that if there were to be any adverse energy effects associated with this proposed action, they would be minimal.

I. National Technology Transfer and Advancement Act

Section 12(d) of the National Technology Transfer and Advancement Act of 1995 ("NTTAA"), Public Law 104–113 (15 U.S.C. 272 note) directs EPA to use voluntary consensus standards (VCS) in its regulatory activities unless to do so would be inconsistent with applicable law or otherwise impractical. Voluntary consensus standards are technical standards (*e.g.,* materials specifications, test methods, sampling procedures and business practices) that are developed or adopted by VCS bodies. NTTAA directs EPA to provide Congress, through OMB, explanations when the Agency decides not to use available and applicable VCS.

EPA conducted searches for the Standards of Performance for New Stationary Sources and Emission Guidelines for Existing Sources: Commercial and Industrial Solid Waste Incineration units through Enhanced NSSN Database managed by the American National Standards Institute (ANSI). We also contacted VCS organizations and accessed and searched their databases.

This rulemaking involves technical standards. EPA has decided to use ASME PTC 19.10–1981, "Flue and Exhaust Gas Analyses," for its manual methods of measuring the oxygen or carbon dioxide content of the exhaust gas. These parts of ASME PTC 19.10–1981 are acceptable alternatives to EPA Methods 3B, 6, 7 and 7C. This standard is available from the American Society of Mechanical Engineers (ASME), 3 Park Avenue, New York, NY 10016–5990.

Another VCS, ASTM D6735–01, "Standard Test Method for Measurement of Gaseous Chlorides and Fluorides from Mineral Calcining Exhaust Sources-Impinger Method," is an acceptable alternative to EPA Method 26A.

Another VCS, ASTM D6784–02, "Standard Test Method for Elemental, Oxidized, Particle-Bound and Total Mercury in Flue Gas Generated from Coal-Fired Stationary Sources (Ontario Hydro Method)" is an acceptable alternative to EPA Method 29.

During the search, if the title or abstract (if provided) of the VCS described technical sampling and analytical procedures that are similar to EPA's reference method, EPA ordered a copy of the standard and reviewed it as a potential equivalent method. All potential standards were reviewed to determine the practicality of the VCS for this rule. This review requires significant method validation data which meets the requirements of EPA Method 301 for accepting alternative methods or scientific, engineering and policy equivalence to procedures in EPA reference methods. The EPA may reconsider determinations of impracticality when additional information is available for particular VCS.

The search identified 23 other VCS that were potentially applicable to this rule in lieu of EPA reference methods. After reviewing the available standards, EPA determined that 21 candidate VCS (ASTM D3154–00 (2006), ASME B133.9–1994 (2001), ISO10396:1993 (2007), ISO12039:2001, ASTM D5835–95 (2007), ASTM D6522–00 (2005), CAN/CSA Z223.2–M86 (1999), ISO 9096:1992 (2003), ANSI/ASME PTC–38–1980 (1985), ASTM D3685/D3685M–98 (2005), ISO 7934:1998, ISO 11632:1998, ASTM D1608–98 (2003), ISO11564:1998, CAN/CSA Z223.24–M1983, CAN/CSA Z223.21–M1978, ASTM D3162–94 (2005), EN 1948–3 (1996), EN 1911–1,2,3 (1998), EN 13211:2001, CAN/CSA Z223.26–M1987) identified for measuring emissions of pollutants or their surrogates subject to emission standards in the rule would not be practical due to lack of equivalency, documentation, validation data and other important technical and policy considerations.

Under 40 CFR 60.13(i) of the NSPS General Provisions, a source may apply to EPA for permission to use alternative test methods or alternative monitoring requirements in place of any required testing methods, performance specifications, or procedures in the final rule and any amendments.

EPA welcomes comments on this aspect of the proposed rulemaking and specifically invites the public to identify potentially applicable voluntary consensus standards and to explain why such standards should be used in this regulation.

J. Executive Order 12898: Federal Actions to Address Environmental Justice in Minority Populations and Low-Income Populations

Executive Order 12898 (59 FR 7629, February 16, 1994) establishes Federal executive policy on environmental justice (EJ). Its main provision directs Federal agencies, to the greatest extent practicable and permitted by law, to make EJ part of their mission by identifying and addressing, as appropriate, disproportionately high and adverse human health or environmental effects of their programs, policies, and activities on minority populations, low-income, and tribal populations in the United States.

This proposed action establishes national emission standards for new and existing CISWI. The EPA estimates that there are approximately 176 such units, including incinerators, burn-off ovens, cement kilns and energy recovery units, covered by this rule. The proposed rule will reduce emissions of all the listed HAP emitted from this source. This includes emissions of cadmium (Cd), hydrogen chloride (HCl), lead (Pb), mercury (Hg), and chlorinated dioxin/furans. Adverse health effects from these pollutants include cancer, irritation of the lungs, skin, and mucus membranes; effects on the central nervous system, and damage to the kidneys), and acute health disorders. The rule will also result in substantial reductions of criteria pollutants such as carbon monoxide (CO), nitrogen oxides (NO_X), particulate matter (PM), and sulfur dioxide (SO_2). Sulfur dioxide and NO_2 are precursors for the formation of $PM_{2.5}$ and ozone. Reducing these emissions will reduce ozone and $PM_{2.5}$ formation and associated health effects, such as adult premature mortality, chronic and acute bronchitis, asthma, and other respiratory and cardiovascular diseases. (Please refer to the RIA contained in the docket for this rulemaking.)

Pursuant to Executive Order 12898, EPA has undertaken to determine the aggregate demographic makeup of the communities near affected sources. This analysis used "proximity-to-a-source" to identify the populations considered to be living near affected sources, such that they have notable exposures to current emissions from these sources. In this approach, EPA reviewed the distributions of different socio-demographic groups in the locations of the expected emission reductions from this rule. The review identified those census blocks within a circular distance of three miles of affected sources and determined the demographic and socio-economic composition (*e.g.*, race, income, education, *etc.*) of these census blocks. The radius of three miles (or approximately five kilometers) has been used in other demographic analyses focused on areas around potential sources. [14, 15, 16, 17] In addition, air modeling experience has shown that beyond three miles, the influence of an individual source of emissions can generally be considered to be small, both in absolute terms and relative to the influence of other sources (assuming there are other sources in the area, as is typical in urban areas). EPA's demographic analysis has shown that these areas tend to have lower proportions of Whites and American Indians, higher proportions of African-Americans, Hispanics and "Other and Multi-racial" populations, and higher proportions of families with incomes below the poverty level.[18]

Based on the fact that the rule does not allow emission increases, the EPA has determined that the proposed rule will not have disproportionately high and adverse human health or environmental effects on minority, low-income, or tribal populations. However, to the extent that any minority, low income, or tribal subpopulation is disproportionately impacted by the current emissions as a result of the proximity of their homes to these sources, that subpopulation also stands to see increased environmental and health benefit from the emissions reductions called for by this rule.

EPA defines "Environmental Justice" to include meaningful involvement of all people regardless of race, color, national origin, or income with respect to the development, implementation, and enforcement of environmental laws, regulations, and polices. To promote meaningful involvement, EPA has developed a communication and outreach strategy to ensure that interested communities have access to this proposed rule, are aware of its content, and have an opportunity to comment during the comment period. During the comment period, EPA will publicize the rulemaking via EJ newsletters, tribal newsletters, EJ listservs, and the internet, including the Office of Policy, Economics, and Innovation's (OPEI) Rulemaking Gateway Web site (*http://yosemite.epa.gov/opei/RuleGate.nsf/*). EPA will also provide general rulemaking fact sheets (*e.g.,* why is this important for my community) for EJ community groups and conduct conference calls with interested communities. In addition, State and Federal permitting requirements will provide State and local governments and members of affected communities the opportunity to provide comments on the permit conditions associated with permitting the sources affected by this rulemaking.

List of Subjects in 40 CFR Part 60

Environmental protection, Administrative practice and procedure, Air pollution control, Intergovernmental relations, Reporting and recordkeeping requirements.

Dated: April 29, 2010.

Lisa Jackson,

Administrator.

For the reasons stated in the preamble, title 40, chapter I, of the Code of Federal Regulations is proposed to be amended as follows:

PART 60—[AMENDED]

1. The authority citation for part 60 continues to read as follows:

Authority: 42 U.S.C. 7401, *et seq.*

2. Revise the heading for subpart CCCC to read as follows:

Subpart CCCC—Standards of Performance for Commercial and Industrial Solid Waste Incineration Units

3. Section 60.2005 is amended by revising the first sentence to read as follows:

§ 60.2005 When does this subpart become effective?

This subpart takes effect on [THE DATE 6 MONTHS AFTER PUBLICATION OF THE FINAL RULE IN THE FEDERAL REGISTER]. * * *

[14] U.S. GAO (Government Accountability Office). *Demographics of People Living Near Waste Facilities.* Washington DC: Government Printing Office; 1995.

[15] Mohai P, Saha R. "Reassessing Racial and Socio-economic Disparities in Environmental Justice Research". *Demography.* 2006;43(2): 383–399.

[16] Mennis J. "Using Geographic Information Systems to Create and Analyze Statistical Surfaces of Populations and Risk for Environmental Justice Analysis". *Social Science Quarterly,* 2002;83(1):281–297.

[17] Bullard RD, Mohai P, Wright B, Saha R, *et al. Toxic Waste and Race at Twenty 1987–2007.* United Church of Christ. March, 2007.

[18] The results of the demographic analysis are presented in "Review of Environmental Justice Impacts", April 2010, a copy of which is available in the docket.

4. Section 60.2015 is amended by revising paragraph (a) to read as follows:

§ 60.2015 What is a new incineration unit?

(a) A new incineration unit is an incineration unit that meets any of the criteria specified in paragraph (a)(1) through (a)(2) of this section.

(1) A commercial and industrial solid waste incineration unit that commenced construction after June 4, 2010.

(2) A commercial and industrial solid waste incineration unit that commenced reconstruction or modification after [THE DATE 6 MONTHS AFTER PUBLICATION OF THE FINAL RULE].

* * * * *

5. Section 60.2020 is amended by:

a. Revising the introductory text.

b. Removing and reserving paragraph (b).

c. Revising paragraph (c).

d. Removing and reserving paragraphs (j), (k), and (l).

e. Revising paragraphs (g), (m) and (n).

f. Removing paragraph (o).

§ 60.2020 What combustion units are exempt from this subpart?

This subpart exempts the types of units described in paragraphs (a), (c) through (i) and (m) of this section, but some units are required to provide notifications. Air curtain incinerators are exempt from the requirements in this subpart except for the provisions in §§ 60.2242, 60.2250, and 60.2260.

* * * * *

(b) [Reserved]

(c) *Municipal waste combustion units.* Incineration units that are regulated under subpart Ea of this part (Standards of Performance for Municipal Waste Combustors); subpart Eb of this part (Standards of Performance for Large Municipal Waste Combustors); subpart Cb of this part (Emission Guidelines and Compliance Time for Large Municipal Combustors); AAAA of this part (Standards of Performance for Small Municipal Waste Combustion Units); or subpart BBBB of this part (Emission Guidelines for Small Municipal Waste Combustion Units). * * *

* * * * *

(g) Hazardous waste combustion units. Units for which you are required to get a permit under section 3005 of the Solid Waste Disposal Act.

* * * * *

(j) [Reserved]

(k) [Reserved]

(l) [Reserved]

(m) *Sewage treatment plants.* Incineration units regulated under subpart O of this part (Standards of Performance for Sewage Treatment Plants).

(n) *Sewage sludge incineration units.* Incineration units combusting sewage sludge for the purpose of reducing the volume of the sewage sludge by removing combustible matter. Sewage sludge incineration unit designs may include fluidized bed and multiple hearth.

§ 60.2025 [Removed]

6. Section 60.2025 is removed.

7. Section 60.2030 is amended by:

a. Revising paragraph (c) introductory text.

b. Removing and reserving paragraph (c)(5).

c. Adding paragraphs (c)(8) and (c)(9).

§ 60.2030 Who implements and enforces this subpart?

* * * * *

(c) The authorities that will not be delegated to State, local, or tribal agencies are specified in paragraphs (c)(1) through (4) and (c)(6) through (9) of this section.

* * * * *

(5) [Reserved]

* * * * *

(8) Approval of alternative opacity emission limits in § 60.2105 under § 60.11(e)(6) through (e)(8).

(9) Performance test and data reduction waivers under § 60.2125(j).

8. Section 60.2045 is revised to read as follows:

§ 60.2045 Who must prepare a siting analysis?

(a) You must prepare a siting analysis if you plan to commence construction of an incinerator after December 1, 2000.

(b) You must prepare a siting analysis for CISWI units that commenced construction after June 4, 2010 or that commenced reconstruction or modification after [THE DATE 6 MONTHS AFTER PUBLICATION OF THE FINAL RULE].

(c) You must prepare a siting analysis if you are required to submit an initial application for a construction permit under 40 CFR part 51, subpart I, or 40 CFR part 52, as applicable, for the reconstruction or modification of your CISWI unit.

9. Section 60.2070 is amended by revising paragraph (c)(1)(vii) to read as follows:

§ 60.2070 What are the operator training and qualification requirements?

* * * * *

(c) * * *

(1) * * *

(vii) Actions to prevent malfunctions or to prevent conditions that may lead to malfunctions.

* * * * *

10. Section 60.2085 is amended by revising paragraph (d) to read as follows:

§ 60.2085 How do I maintain my operator qualification?

* * * * *

(d) Prevention of malfunctions or conditions that may lead to malfunction.

* * * * *

11. Section 60.2105 is revised to read as follow:

§ 60.2105 What emission limitations must I meet and by when?

(a) You must meet the emission limitations for each unit, including bypass stack or vent, specified in table 1 of this subpart or tables 5 through 9 of this subpart by the applicable date in § 60.2140. You must be in compliance with the emission limitations of this subpart that apply to you at all times.

(b) An incinerator that commenced construction after November 30, 1999 but no later than June 4, 2010 or that commenced reconstruction or modification on or after June 1, 2001 but no later than [THE DATE 6 MONTHS AFTER PUBLICATION OF THE FINAL RULE] must meet the more stringent emission limit for the respective pollutant in table 1 of this subpart or table 6 of subpart DDDD.

(c) Units that do not use wet scrubbers must maintain opacity to less than or equal to the percent opacity (1-hour block average) specified in table 1 of this subpart or tables 5 through 9 of this subpart, as applicable.

12. Section 60.2110 is amended by adding paragraphs (d), (e) and (f) to read as follows:

§ 60.2110 What operating limits must I meet and by when?

* * * * *

(d) If you use an electrostatic precipitator to comply with the emission limitations, you must measure the voltage and amperage of the electrostatic precipitator collection plates during the particulate matter performance test. Calculate the average value of these parameters for each test run. The minimum test run averages establish your site-specific minimum voltage and amperage operating limits for the electrostatic precipitator.

(e) If you use activated carbon injection to comply with the emission limitations, you must measure the mercury sorbent flow rate during the mercury performance test. The minimum mercury sorbent flow rate test run averages establish your site-specific minimum mercury sorbent flow rate.

(f) If you use selective noncatalytic reduction to comply with the emission

limitations, you must establish the maximum charge rate, the minimum secondary chamber temperature (if applicable to your CISWI unit) and the minimum reagent flow rate as site-specific operating parameters during the initial nitrogen oxides performance test to determine compliance with the emissions limits.

13. Section 60.2115 is revised to read as follows:

§ 60.2115 What if I do not use a wet scrubber, activated carbon injection, selective noncatalytic reduction, or an electrostatic precipitator to comply with the emission limitations?

(a) If you use an air pollution control device other than a wet scrubber, activated carbon injection, selective noncatalytic reduction, or an electrostatic precipitator or limit emissions in some other manner to comply with the emission limitations under § 60.2105, you must petition the EPA Administrator for specific operating limits to be established during the initial performance test and continuously monitored thereafter. You must not conduct the initial performance test until after the petition has been approved by the Administrator. Your petition must include the 5 items listed in paragraphs (1) through (5) of this section.

(1) Identification of the specific parameters you propose to use as additional operating limits.

(2) A discussion of the relationship between these parameters and emissions of regulated pollutants, identifying how emissions of regulated pollutants change with changes in these parameters and how limits on these parameters will serve to limit emissions of regulated pollutants.

(3) A discussion of how you will establish the upper and/or lower values for these parameters which will establish the operating limits on these parameters.

(4) A discussion identifying the methods you will use to measure and the instruments you will use to monitor these parameters, as well as the relative accuracy and precision of these methods and instruments.

(5) A discussion identifying the frequency and methods for recalibrating the instruments you will use for monitoring these parameters.

(b) For energy recovery units that do not use a wet scrubber, you must install, operate, certify and maintain a continuous opacity monitoring system according to the procedures in § 60.2145 by the compliance date specified in § 60.2105.

§ 60.2120 [Removed]

14. Section 60.2120 is removed.

15. Section 60.2125 is amended by revising paragraph (c) and adding paragraphs (h) through (n) to read as follows:

§ 60.2125 How do I conduct the initial and annual performance test?

* * * * *

(c) All performance tests must be conducted using the minimum run duration specified in table 1 of this subpart or tables 5 through 9 of this subpart.

* * * * *

(h) Method 22 of appendix A–7 of this part must be used to determine compliance with the fugitive ash emission limit in table 1 of this subpart or tables 5 through 9 of this subpart.

(i) Except as specified in paragraphs (i)(1),(i)(2), (i)(3), and (i)(4) of this section, within 60 days after achieving the maximum production rate at which the affected facility will be operated, but not later than 180 days after initial startup of such facility, or at such other times specified by this part, and at such other times as may be required by the Administrator under Section 114 of the Clean Air Act, the owner or operator of such facility must conduct performance test(s) and furnish the Administrator a written report of the results of such performance test(s).

(1) If a force majeure is about to occur, occurs, or has occurred for which the affected owner or operator intends to assert a claim of force majeure, the owner or operator must notify the Administrator, in writing as soon as practicable following the date the owner or operator first knew, or through due diligence should have known that the event may cause or caused a delay in testing beyond the regulatory deadline, but the notification must occur before the performance test deadline unless the initial force majeure or a subsequent force majeure event delays the notice, and in such cases, the notification must occur as soon as practicable.

(2) The owner or operator must provide to the Administrator a written description of the force majeure event and a rationale for attributing the delay in testing beyond the regulatory deadline to the force majeure; describe the measures taken or to be taken to minimize the delay; and identify a date by which the owner or operator proposes to conduct the performance test. The performance test must be conducted as soon as practicable after the force majeure occurs.

(3) The decision as to whether or not to grant an extension to the performance test deadline is solely within the discretion of the Administrator. The Administrator will notify the owner or operator in writing of approval or disapproval of the request for an extension as soon as practicable.

(4) Until an extension of the performance test deadline has been approved by the Administrator under paragraphs (i)(1), (2), and (3) of this section, the owner or operator of the affected facility remains strictly subject to the requirements of this part.

(j) Performance tests must be conducted and data reduced in accordance with the test methods and procedures contained in this subpart unless the Administrator does one of the following.

(1) Specifies or approves, in specific cases, the use of a reference method with minor changes in methodology.

(2) Approves the use of an equivalent method.

(3) Approves the use of an alternative method the results of which he has determined to be adequate for indicating whether a specific source is in compliance.

(4) Waives the requirement for performance tests because the owner or operator of a source has demonstrated by other means to the Administrator's satisfaction that the affected facility is in compliance with the standard.

(5) Approves shorter sampling times and smaller sample volumes when necessitated by process variables or other factors. Nothing in this paragraph is construed to abrogate the Administrator's authority to require testing under Section 114 of the Clean Air Act.

(k) Performance tests must be conducted under such conditions as the Administrator shall specify to the plant operator based on representative performance of the affected facility. The owner or operator must make available to the Administrator such records as may be necessary to determine the conditions of the performance tests.

(l) The owner or operator of an affected facility must provide the Administrator at least 30 days' prior notice of any performance test, except as specified under other subparts, to afford the Administrator the opportunity to have an observer present. If after 30 days' notice for an initially scheduled performance test, there is a delay (due to operational problems, etc.) in conducting the scheduled performance test, the owner or operator of an affected facility must notify the Administrator (or delegated State or local agency) as soon as possible of any delay in the original test date, either by providing at least 7 days' prior notice of the rescheduled date of the performance

test, or by arranging a rescheduled date with the Administrator (or delegated State or local agency) by mutual agreement.

(m) The owner or operator of an affected facility must provide, or cause to be provided, performance testing facilities as follows:

(1) Sampling ports adequate for test methods applicable to such facility. This includes the following.

(i) Constructing the air pollution control system such that volumetric flow rates and pollutant emission rates can be accurately determined by applicable test methods and procedures.

(ii) Providing a stack or duct free of cyclonic flow during performance tests, as demonstrated by applicable test methods and procedures.

(2) Safe sampling platform(s).

(3) Safe access to sampling platform(s).

(4) Utilities for sampling and testing equipment.

(n) Unless otherwise specified in this subpart, each performance test must consist of three separate runs using the applicable test method. Each run must be conducted for the time and under the conditions specified in the applicable standard. For the purpose of determining compliance with an applicable standard, the arithmetic means of results of the three runs apply. In the event that a sample is accidentally lost or conditions occur in which one of the three runs must be discontinued because of forced shutdown, failure of an irreplaceable portion of the sample train, extreme meteorological conditions, or other circumstances, beyond the owner or operator's control, compliance may, upon the Administrator's approval, be determined using the arithmetic mean of the results of the two other runs.

16. Section 60.2130 is revised to read as follows:

§ 60.2130 How are the performance test data used?

You use results of performance tests to demonstrate compliance with the emission limitations in table 1 of this subpart or tables 5 through 9 of this subpart.

17. Section 60.2135 is revised to read as follows:

§ 60.2135 How do I demonstrate initial compliance with the emission limitations and establish the operating limits?

You must conduct an initial performance test, as required under § 60.2105 and § 60.2125 to determine compliance with the emission limitations in table 1 of this subpart or tables 5 through 9 of this subpart and to establish operating limits using the procedures in § 60.2110 or § 60.2115. The initial performance test must be conducted using the test methods listed in table 1 of this subpart or tables 5 through 9 of this subpart and the procedures in § 60.2125. The use of the bypass stack during a performance test shall invalidate the performance test.

18. Section 60.2141 is added to read as follows:

§ 60.2141 By what date must I conduct the initial air pollution control device inspection?

(a) The initial air pollution control device inspection must be conducted within 60 days after installation of the control device and the associated CISWI unit reaches the charge rate at which it will operate, but no later than 180 days after the device's initial startup.

(b) Within 10 operating days following an air pollution control device inspection, all necessary repairs must be completed unless the owner or operator obtains written approval from the State agency establishing a date whereby all necessary repairs of the designated facility must be completed.

19. Section 60.2145 is amended by revising paragraph (a) and (b) and adding paragraphs (d) through (t) to read as follows:

§ 60.2145 How do I demonstrate continuous compliance with the emission limitations and the operating limits?

(a) You must conduct an annual performance test for particulate matter, hydrogen chloride, fugitive ash and opacity for each CISWI unit as required under § 60.2125 to determine compliance with the emission limitations. The annual performance test must be conducted using the test methods listed in table 1 of this subpart or tables 5 through 9 of this subpart and the procedures in § 60.2125.

(b) You must continuously monitor the operating parameters specified in § 60.2110 or established under § 60.2115. Operation above the established maximum or below the established minimum operating limits constitutes a deviation from the established operating limits. Three-hour rolling average values are used to determine compliance (except for baghouse leak detection system alarms) unless a different averaging period is established under § 60.2115. Operating limits are confirmed or reestablished during performance tests.

* * * * *

(d) For energy recovery units, incinerators, burn-off ovens and small remote units, you must perform annual visual emissions test for ash handling.

(e) For energy recovery units, you must conduct an annual performance test for opacity (except where particulate matter continuous emissions monitoring system are used for compliance) and the pollutants (except for carbon monoxide) listed in table 1 of this subpart or tables 5 through 9 of this subpart.

(f) For energy recovery units, demonstrate continuous compliance with the carbon monoxide emission limit using a carbon monoxide continuous emissions monitoring system according to the following requirements:

(1) Determine continuous compliance with the carbon monoxide emissions limit using a 24-hour block average, calculated as specified in section 12.4.1 of EPA Reference Method 19 of appendix A–7 of this part.

(2) Operate the carbon monoxide continuous emissions monitoring system in accordance with the requirements of performance specification 4B of appendix B of this part and quality assurance procedure one of appendix F of this part.

(g) For energy recovery units with design capacities greater than 250 MMBtu/hr, demonstrate continuous compliance with the particulate matter emissions limit using a particulate matter continuous emissions monitoring system according to the procedures in § 60.2165(n).

(h) For waste-burning kilns, you must conduct an annual performance test for particulate matter, hydrogen chloride, fugitive ash and opacity (as mentioned in § 60.2145(a)), nitrogen oxides and sulfur dioxide as listed in table 7 of this subpart. You must determine compliance with the mercury emissions limit using a mercury continuous emissions monitoring system according to the following requirements:

(1) Operate a continuous emission monitor in accordance with performance specification 12A of 40 CFR part 60, appendix B or a sorbent trap based integrated monitor in accordance with performance specification 12B of 40 CFR part 60, appendix B or appendix K of 40 CFR part 75. The duration of the performance test must be a calendar month. For each calendar month in which the waste-burning kiln operates, hourly mercury concentration data and stack gas volumetric flow rate data must be obtained.

(2) Owners or operators using a mercury continuous emissions monitoring system must install, operate, calibrate and maintain an instrument for continuously measuring and recording the exhaust gas flow rate to the

atmosphere according to the requirements of performance specification 12A of 40 CFR part 60, appendix B and quality assurance procedure 5 of 40 CFR part 60, appendix F, upon promulgation.

(3) The owner or operator of a waste-burning kiln must demonstrate initial compliance by operating a mercury continuous emissions monitoring system while the raw mill of the in-line kiln/raw mill is under normal operating conditions and while the raw mill of the in-line kiln/raw mill is not operating.

(i) If you use an air pollution control device to meet the emission limitations in this subpart, you must conduct an initial and annual inspection of the air pollution control device. The inspection must include, at a minimum, the following:

(1) Inspect air pollution control device(s) for proper operation.

(2) Develop a site-specific monitoring plan according to the requirements in paragraph (j) of this section. This requirement also applies to you if you petition the EPA Administrator for alternative monitoring parameters under § 60.13(i).

(j) For each continuous monitoring system required in this section, you must develop and submit to the EPA Administrator for approval a site-specific monitoring plan according to the requirements of this paragraph (j) that addresses paragraphs (j)(1)(i) through (vi) of this section.

(1) You must submit this site-specific monitoring plan at least 60 days before your initial performance evaluation of your continuous monitoring system.

(i) Installation of the continuous monitoring system sampling probe or other interface at a measurement location relative to each affected process unit such that the measurement is representative of control of the exhaust emissions (*e.g.,* on or downstream of the last control device).

(ii) Performance and equipment specifications for the sample interface, the pollutant concentration or parametric signal analyzer and the data collection and reduction systems.

(iii) Performance evaluation procedures and acceptance criteria (*e.g.,* calibrations).

(iv) Ongoing operation and maintenance procedures in accordance with the general requirements of § 60.11(d).

(v) Ongoing data quality assurance procedures in accordance with the general requirements of § 60.13.

(vi) Ongoing recordkeeping and reporting procedures in accordance with the general requirements of § 60.7(b), (c), (c)(1), (c)(4), (d), (e), (f) and (g).

(2) You must conduct a performance evaluation of each continuous monitoring system in accordance with your site-specific monitoring plan.

(3) You must operate and maintain the continuous monitoring system in continuous operation according to the site-specific monitoring plan.

(k) If you have an operating limit that requires the use of a flow measurement device, you must meet the requirements in paragraphs (j) and (k)(1) through (4) of this section.

(1) Locate the flow sensor and other necessary equipment in a position that provides a representative flow.

(2) Use a flow sensor with a measurement sensitivity of 2 percent of the flow rate.

(3) Reduce swirling flow or abnormal velocity distributions due to upstream and downstream disturbances.

(4) Conduct a flow sensor calibration check at least semiannually.

(l) If you have an operating limit that requires the use of a pressure measurement device, you must meet the requirements in paragraphs (j) and (l)(1) through (6) of this section.

(1) Locate the pressure sensor(s) in a position that provides a representative measurement of the pressure.

(2) Minimize or eliminate pulsating pressure, vibration and internal and external corrosion.

(3) Use a gauge with a minimum tolerance of 1.27 centimeters of water or a transducer with a minimum tolerance of 1 percent of the pressure range.

(4) Check pressure tap pluggage daily.

(5) Using a manometer, check gauge calibration quarterly and transducer calibration monthly.

(6) Conduct calibration checks any time the sensor exceeds the manufacturer's specified maximum operating pressure range or install a new pressure sensor.

(m) If you have an operating limit that requires the use of a pH measurement device, you must meet the requirements in paragraphs (j) and (m)(1) through (3) of this section.

(1) Locate the pH sensor in a position that provides a representative measurement of scrubber effluent pH.

(2) Ensure the sample is properly mixed and representative of the fluid to be measured.

(3) Check the pH meter's calibration on at least two points every 8 hours of process operation.

(n) If you have an operating limit that requires the use of equipment to monitor voltage and secondary current (or total power input) of an electrostatic precipitator, you must use voltage and secondary current monitoring equipment to measure voltage and secondary current to the electrostatic precipitator.

(o) If you have an operating limit that requires the use of equipment to monitor sorbent injection rate (*e.g.,* weigh belt, weigh hopper, or hopper flow measurement device), you must meet the requirements in paragraphs (j) and (o)(1) through (3) of this section.

(1) Locate the device in a position(s) that provides a representative measurement of the total sorbent injection rate.

(2) Install and calibrate the device in accordance with manufacturer's procedures and specifications.

(3) At least annually, calibrate the device in accordance with the manufacturer's procedures and specifications.

(p) If you elect to use a fabric filter bag leak detection system to comply with the requirements of this subpart, you must install, calibrate, maintain and continuously operate a bag leak detection system as specified in paragraphs (p)(1) through (8) of this section.

(1) You must install and operate a bag leak detection system for each exhaust stack of the fabric filter.

(2) Each bag leak detection system must be installed, operated, calibrated and maintained in a manner consistent with the manufacturer's written specifications and recommendations and in accordance with the guidance provided in EPA–454/R–98–015, September 1997.

(3) The bag leak detection system must be certified by the manufacturer to be capable of detecting particulate matter emissions at concentrations of 10 milligrams per actual cubic meter or less.

(4) The bag leak detection system sensor must provide output of relative or absolute particulate matter loadings.

(5) The bag leak detection system must be equipped with a device to continuously record the output signal from the sensor.

(6) The bag leak detection system must be equipped with an alarm system that will sound automatically when an increase in relative particulate matter emissions over a preset level is detected. The alarm must be located where it is easily heard by plant operating personnel.

(7) For positive pressure fabric filter systems that do not duct all compartments of cells to a common stack, a bag leak detection system must be installed in each baghouse compartment or cell.

(8) Where multiple bag leak detectors are required, the system's

instrumentation and alarm may be shared among detectors.

(q) For facilities using a continuous emissions monitoring system to demonstrate compliance with the sulfur dioxide emission limit, compliance with the sulfur dioxide emission limit may be demonstrated by using the continuous emission monitoring system specified in § 60.2165 to measure sulfur dioxide and calculating a 24-hour daily geometric average emission concentration using EPA Reference Method 19, sections 4.3 and 5.4, as applicable. The sulfur dioxide continuous emission monitoring system must be operated according to performance specification 2 in appendix B of this part and must follow the procedures and methods specified in this paragraph (q). For sources that have actual inlet emissions less than 100 parts per million dry volume, the relative accuracy criterion for inlet sulfur dioxide continuous emission monitoring systems should be no greater than 20 percent of the mean value of the reference method test data in terms of the units of the emission standard, or 5 parts per million dry volume absolute value of the mean difference between the reference method and the continuous emission monitoring systems, whichever is greater.

(1) During each relative accuracy test run of the continuous emission monitoring system required by performance specification 2 in appendix B of this part, sulfur dioxide and oxygen (or carbon dioxide) data must be collected concurrently (or within a 30- to 60-minute period) by both the continuous emission monitors and the test methods specified in paragraphs (q)(1)(i) and (q)(1)(ii) of this section.

(i) For sulfur dioxide, EPA Reference Method 6, 6A, or 6C, or as an alternative ANSI/ASME PTC–19.10–1981 Flue and Exhaust Gas Analysis [Part 10, Instruments and Apparatus] (incorporated by reference, see § 60.17], must be used.

(ii) For oxygen (or carbon dioxide), EPA Reference Method 3, 3A, or 3B, or as an alternative ANSI/ASME PTC–19.10–1981 Flue and Exhaust Gas Analysis [Part 10, Instruments and Apparatus] (incorporated by reference, see § 60.17] as applicable, must be used.

(2) The span value of the continuous emissions monitoring system at the inlet to the sulfur dioxide control device must be 125 percent of the maximum estimated hourly potential sulfur dioxide emissions of the unit subject to this rule. The span value of the continuous emission monitoring system at the outlet of the sulfur dioxide control device must be 50 percent of the maximum estimated hourly potential sulfur dioxide emissions of the unit subject to this rule.

(3) Quarterly accuracy determinations and daily calibration drift tests must be performed in accordance with procedure 1 in appendix F of this part.

(4) When sulfur dioxide emissions data are not obtained because of continuous emission monitoring system breakdowns, repairs, calibration checks and/or zero and span adjustments, emissions data must be obtained by using other monitoring systems as approved by EPA or EPA Reference Method 19 to provide, as necessary, valid emissions data for a minimum of 85 percent of the hours per day, 90 percent of the hours per calendar quarter, and 95 percent of the hours per calendar year that the affected facility is operated and combusting solid waste (as that term is defined by the Administrator pursuant to Subtitle D of RCRA).

(r) For facilities using a continuous emissions monitoring system to demonstrate continuous compliance with the nitrogen oxides emission limit, compliance with the nitrogen oxides emission limit may be demonstrated by using the continuous emission monitoring system specified in § 60.2165 to measure nitrogen oxides and calculating a 24-hour daily arithmetic average emission concentration using EPA Reference Method 19, section 4.1. The nitrogen oxides continuous emission monitoring system must be operated according to performance specification 2 in appendix B of this part and must follow the procedures and methods specified in paragraphs (r)(1) through (r)(5) of this section.

(1) During each relative accuracy test run of the continuous emission monitoring system required by performance specification 2 of appendix B of this part, nitrogen oxides and oxygen (or carbon dioxide) data must be collected concurrently (or within a 30- to 60-minute period) by both the continuous emission monitors and the test methods specified in paragraphs (r)(1)(i) and (r)(1)(ii) of this section.

(i) For nitrogen oxides, EPA Reference Method 7, 7A, 7C, 7D, or 7E must be used.

(ii) For oxygen (or carbon dioxide), EPA Reference Method 3, 3A, or 3B, or as an alternative ANSI/ASME PTC–19.10–1981—Flue and Exhaust Gas Analysis [Part 10, Instruments and Apparatus] (incorporated by reference, *see* § 60.17] as applicable, must be used.

(2) The span value of the continuous emission monitoring system must be 125 percent of the maximum estimated hourly potential nitrogen oxide emissions of unit.

(3) Quarterly accuracy determinations and daily calibration drift tests must be performed in accordance with procedure 1 in appendix F of this part.

(4) When nitrogen oxides continuous emissions monitoring system data are not obtained because of continuous emission monitoring system breakdowns, repairs, calibration checks and zero and span adjustments, emissions data must be obtained using other monitoring systems as approved by EPA or EPA Reference Method 19 to provide, as necessary, valid emissions data for a minimum of 85 percent of the hours per day, 90 percent of the hours per calendar quarter, and 95 percent of the hours per calendar year the unit is operated and combusting solid waste.

(5) The owner or operator of an affected facility may request that compliance with the nitrogen oxides emission limit be determined using carbon dioxide measurements corrected to an equivalent of 7 percent oxygen. If carbon dioxide is selected for use in diluent corrections, the relationship between oxygen and carbon dioxide levels must be established during the initial performance test according to the procedures and methods specified in paragraphs (r)(5)(i) through (r)(5)(iv) of this section. This relationship may be re-established during performance compliance tests.

(i) The fuel factor equation in Method 3B must be used to determine the relationship between oxygen and carbon dioxide at a sampling location. Method 3, 3A, or 3B, or as an alternative ANSI/ASME PTC–19.10–1981—Flue and Exhaust Gas Analysis [Part 10, Instruments and Apparatus] (incorporated by reference, see § 60.17) as applicable, must be used to determine the oxygen concentration at the same location as the carbon dioxide monitor.

(ii) Samples must be taken for at least 30 minutes in each hour.

(iii) Each sample must represent a 1-hour average.

(iv) A minimum of 3 runs must be performed.

(s) For facilities using a continuous emissions monitoring system to demonstrate continuous compliance with any of the emission limits of this subpart, you must complete the following:

(1) Demonstrate compliance with the appropriate emission limit(s) using a 24-hour block average, calculated following the procedures in EPA Method 19 of appendix A–7 of this part.

(2) Operate all continuous emissions monitoring systems in accordance with

the applicable procedures under appendices B and F of this part.

(t) Use of the bypass stack at any time is an emissions standards deviation for particulate matter, HCl, Pb, Cd and Hg.

20. Section 60.2150 is revised to read as follows:

§ 60.2150 By what date must I conduct the annual performance test?

You must conduct annual performance tests within 12 months following the initial performance test. Conduct subsequent annual performance tests within 12 months following the previous one.

21. Section 60.2151 is added to read as follows:

§ 60.2151 By what date must I conduct the annual air pollution control device inspection?

On an annual basis (no more than 12 months following the previous annual air pollution control device inspection), you must complete the air pollution control device inspection as described in § 60.2141.

22. Section 60.2155 is revised to read as follows:

§ 60.2155 May I conduct performance testing less often?

(a) You can test less often for particulate matter, hydrogen chloride, fugitive ash, or opacity, provided:

(1) You have test data for at least 3 consecutive years.

(2) The test data results for particulate matter, hydrogen chloride, fugitive ash, or opacity is less than 75 percent of the emissions or opacity limit.

(3) There are no changes in the operation of the affected source or air pollution control equipment that could affect emissions. In this case, you do not have to conduct a performance test for that pollutant for the next 2 years. You must conduct a performance test during the third year and no more than 36 months following the previous performance test.

(b) If your CISWI unit continues to emit less than 75 percent of the emission limitation for particulate matter, hydrogen chloride, fugitive ash, or opacity, and there are no changes in the operation of the affected facility or air pollution control equipment that could increase emissions, you may choose to conduct performance tests for these pollutants every third year, but each test must be within 36 months of the previous performance test.

(c) If a performance test shows emissions exceeded 75 percent or greater of the emission or opacity limitation for particulate matter, hydrogen chloride, fugitive ash, or opacity, you must conduct annual performance tests for that pollutant until all performance tests over a 3-year period are within 75 percent of the applicable emission limitation.

23. Section 60.2165 is amended by revising paragraph (c) and adding paragraphs (d) through (p) to read as follows:

§ 60.2165 What monitoring equipment must I install and what parameters must I monitor?

* * * * *

(c) If you are using something other than a wet scrubber, activated carbon, selective non-catalytic reduction, or an electrostatic precipitator to comply with the emission limitations under § 60.2105, you must install, calibrate (to the manufacturers' specifications), maintain and operate the equipment necessary to monitor compliance with the site-specific operating limits established using the procedures in § 60.2115.

(d) If you use activated carbon injection to comply with the emission limitations in this subpart, you must measure the minimum mercury sorbent flow rate once per hour.

(e) If you use selective noncatalytic reduction to comply with the emission limitations, you must complete the following:

(1) Following the date on which the initial performance test is completed or is required to be completed under § 60.2125, whichever date comes first, ensure that the affected facility does not operate above the maximum charge rate, or below the minimum secondary chamber temperature (if applicable to your CISWI unit) or the minimum reagent flow rate measured as 3-hour rolling averages (calculated each hour as the average of the previous 3 operating hours) at all times. Operating parameter limits do not apply during performance tests.

(2) Operation of the affected facility above the maximum charge rate, below the minimum secondary chamber temperature and below the minimum reagent flow rate simultaneously constitute a violation of the nitrogen oxides emissions limit.

(f) If you use an electrostatic precipitator to comply with the emission limits of this subpart, you must monitor the voltage and amperage of the electrostatic precipitator collection plates and maintain the 3-hour block averages at or above the operating limits established during the mercury or particulate matter performance test.

(g) To demonstrate continuous compliance with the hydrogen chloride emissions limit, a facility may substitute use of a hydrogen chloride continuous emissions monitoring system for conducting the hydrogen chloride annual performance test, monitoring the minimum hydrogen chloride sorbent flow rate and monitoring the minimum scrubber liquor pH.

(h) To demonstrate continuous compliance with the particulate matter emissions limit, a facility may substitute use of a particulate matter continuous emissions monitoring system for conducting the particulate matter annual performance test and monitoring the minimum pressure drop across the wet scrubber, if applicable.

(i) To demonstrate continuous compliance with the dioxin/furan emissions limit, a facility may substitute use of a continuous automated sampling system for the dioxin/furan annual performance test. You must record the output of the system and analyze the sample according to EPA Method 23 of appendix A–7 of this part. This option to use a continuous automated sampling system takes effect on the date a final performance specification applicable to dioxin/furan from continuous monitors is published in the **Federal Register**. The owner or operator who elects to continuously sample dioxin/furan emissions instead of sampling and testing using EPA Method 23 of appendix A–7 must install, calibrate, maintain and operate a continuous automated sampling system and must comply with the requirements specified in § 60.58b(p) and (q).

(j) To demonstrate continuous compliance with the mercury emissions limit, a facility may substitute use of a continuous automated sampling system for the mercury annual performance test. You must record the output of the system and analyze the sample at set intervals using any suitable determinative technique that can meet appropriate performance criteria. This option to use a continuous automated sampling system takes effect on the date a final performance specification applicable to mercury from monitors is published in the **Federal Register**. The owner or operator who elects to continuously sample mercury emissions instead of sampling and testing using EPA Reference Method 29 of appendix A–8 of this part, ASTM D6784–02 (2008), Standard Test Method for Elemental, Oxidized, Particle Bound and Total Mercury in Flue Gas Generated from Coal-Fired Stationary Sources (Ontario Hydro Method), or an approved alternative method for measuring mercury emissions, must install, calibrate, maintain and operate a continuous automated sampling system

and must comply with the requirements specified in § 60.58b(p) and (q).

(k) To demonstrate continuous compliance with the nitrogen oxides emissions limit, a facility may substitute use of a continuous emissions monitoring system for the nitrogen oxides annual performance test to demonstrate compliance with the nitrogen oxides emissions limits.

(1) Install, calibrate, maintain and operate a continuous emission monitoring system for measuring nitrogen oxides emissions discharged to the atmosphere and record the output of the system. The requirements under performance specification 2 of appendix B of this part, the quality assurance procedure one of appendix F of this part and the procedures under § 60.13 must be followed for installation, evaluation and operation of the continuous emission monitoring system.

(2) Following the date that the initial performance test for nitrogen oxides is completed or is required to be completed under § 60.2125, compliance with the emission limit for nitrogen oxides required under § 60.52b(d) must be determined based on the 24-hour daily arithmetic average of the hourly emission concentrations using continuous emission monitoring system outlet data. The 1-hour arithmetic averages must be expressed in parts per million by volume (dry basis) and used to calculate the 24-hour daily arithmetic average concentrations. The 1-hour arithmetic averages must be calculated using the data points required under § 60.13(e)(2).

(l) To demonstrate continuous compliance with the sulfur dioxide emissions limit, a facility may substitute use of a continuous automated sampling system for the sulfur dioxide annual performance test to demonstrate compliance with the sulfur dioxide emissions limits.

(1) Install, calibrate, maintain and operate a continuous emission monitoring system for measuring sulfur dioxide emissions discharged to the atmosphere and record the output of the system. The requirements under performance specification 2 of appendix B of this part, the quality assurance requirements of procedure one of appendix F of this part and procedures under § 60.13 must be followed for installation, evaluation and operation of the continuous emission monitoring system.

(2) Following the date that the initial performance test for sulfur dioxide is completed or is required to be completed under § 60.2125, compliance with the sulfur dioxide emission limit may be determined based on the 24-hour daily geometric average of the hourly arithmetic average emission concentrations using continuous emission monitoring system outlet data. The 1-hour arithmetic averages must be expressed in parts per million corrected to 7 percent oxygen (dry basis) and used to calculate the 24-hour daily geometric average emission concentrations and daily geometric average emission percent reductions. The 1-hour arithmetic averages must be calculated using the data points required under § 60.13(e)(2).

(m) For energy recovery units that do not use a wet scrubber, you must install, operate, certify and maintain a continuous opacity monitoring system according to the procedures in paragraphs (m)(1) through (5) of this section by the compliance date specified in § 60.2105. Energy recovery units that use a particulate matter continuous emissions monitoring system to demonstrate initial and continuing compliance according to the procedures in § 60.2165(n) are not required to install a continuous opacity monitoring system and must perform the annual performance tests for opacity consistent with § 60.2145(e).

(1) Install, operate and maintain each continuous opacity monitoring system according to performance specification 1 of 40 CFR part 60, appendix B.

(2) Conduct a performance evaluation of each continuous opacity monitoring system according to the requirements in § 60.13 and according to PS–1 of 40 CFR part 60, appendix B.

(3) As specified in § 60.13(e)(1), each continuous opacity monitoring system must complete a minimum of one cycle of sampling and analyzing for each successive 10-second period and one cycle of data recording for each successive 6-minute period.

(4) Reduce the continuous opacity monitoring system data as specified in § 60.13(h)(1).

(5) Determine and record all the 6-minute averages (and 1-hour block averages as applicable) collected.

(n) For energy recovery units with design capacities greater than 250 MMBtu/hr, in place of particulate matter testing with EPA Method 5, an owner or operator must install, calibrate, maintain and operate a continuous emission monitoring system for monitoring particulate matter emissions discharged to the atmosphere and record the output of the system. The owner or operator of an affected facility who continuously monitors particulate matter emissions instead of conducting performance testing using EPA Method 5 must install, calibrate, maintain and operate a continuous emission monitoring system and must comply with the requirements specified in paragraphs (n)(1) through (n)(14) of this section.

(1) Notify the Administrator one (1) month before starting use of the system.

(2) Notify the Administrator one (1) month before stopping use of the system.

(3) The monitor must be installed, evaluated and operated in accordance with the requirements of performance specification 11 of appendix B of this part and quality assurance requirements of procedure two of appendix F of this part and § 60.13.

(4) The initial performance evaluation must be completed no later than 180 days after the date of initial startup of the affected facility, as specified under § 60.2125 or within 180 days of notification to the Administrator of use of the continuous monitoring system if the owner or operator was previously determining compliance by Method 5 performance tests, whichever is later.

(5) The owner or operator of an affected facility may request that compliance with the particulate matter emission limit be determined using carbon dioxide measurements corrected to an equivalent of 7 percent oxygen. The relationship between oxygen and carbon dioxide levels for the affected facility must be established according to the procedures and methods specified in § 60.2145(r)(5)(i) through (r)(5)(iv).

(6) The owner or operator of an affected facility must conduct an initial performance test for particulate matter emissions as required under § 60.2125. Compliance with the particulate matter emission limit must be determined by using the continuous emission monitoring system specified in paragraph (n) of this section to measure particulate matter and calculating a 24-hour block arithmetic average emission concentration using EPA Reference Method 19, section 4.1.

(7) Compliance with the particulate matter emission limit must be determined based on the 24-hour daily (block) average of the hourly arithmetic average emission concentrations using continuous emission monitoring system outlet data.

(8) At a minimum, valid continuous monitoring system hourly averages must be obtained as specified in § 60.2170(e).

(9) The 1-hour arithmetic averages required under paragraph (n)(7) of this section must be expressed in milligrams per dry standard cubic meter corrected to 7 percent oxygen (or carbon dioxide) (dry basis) and must be used to calculate the 24-hour daily arithmetic average emission concentrations. The 1-hour arithmetic averages must be calculated

using the data points required under § 60.13(e)(2).

(10) All valid continuous emission monitoring system data must be used in calculating average emission concentrations even if the minimum continuous emission monitoring system data requirements of paragraph (n)(8) of this section are not met.

(11) The continuous emission monitoring system must be operated according to performance specification 11 in appendix B of this part.

(12) During each relative accuracy test run of the continuous emission monitoring system required by performance specification 11 in appendix B of this part, particulate matter and oxygen (or carbon dioxide) data must be collected concurrently (or within a 30- to 60-minute period) by both the continuous emission monitors and the following test methods.

(i) For particulate matter, EPA Reference Method 5 must be used.

(ii) For oxygen (or carbon dioxide), EPA Reference Method 3, 3A, or 3B, as applicable must be used.

(13) Quarterly accuracy determinations and daily calibration drift tests must be performed in accordance with procedure 2 in appendix F of this part.

(14) When particulate matter emissions data are not obtained because of continuous emission monitoring system breakdowns, repairs, calibration checks and zero and span adjustments, emissions data must be obtained by using other monitoring systems as approved by the Administrator or EPA Reference Method 19 to provide, as necessary, valid emissions data for a minimum of 85 percent of the hours per day, 90 percent of the hours per calendar quarter, and 95 percent of the hours per calendar year that the affected facility is operated and combusting waste.

(o) For energy recovery units, operate the carbon monoxide continuous emissions monitoring system in accordance with the requirements of performance specification 4B of appendix B of this part and quality assurance procedure 1 of appendix F of this part.

(p) The owner/operator of an affected source with a bypass stack shall install, calibrate (to manufacturers' specifications), maintain and operate a device or method for measuring the use of the bypass stack including date, time and duration.

24. Section 60.2170 is revised to read as follows:

§ 60.2170 Is there a minimum amount of monitoring data I must obtain?

(a) You must conduct all monitoring at all times the CISWI unit is operating.

(b) You must use all the data collected during all periods in assessing compliance with the operating limits.

(c) For continuous emission monitoring systems for measuring sulfur dioxide emissions, valid continuous monitoring system hourly averages must be obtained as specified in paragraphs (c)(1) and (c)(2) of this section for a minimum of 85 percent of the hours per day, 90 percent of the hours per calendar quarter, and 95 percent of the hours per calendar year that the affected facility is combusting waste. All valid continuous emission monitoring system data must be used in calculating average emission concentrations and percent reductions even if the minimum continuous emission monitoring system data requirements of this paragraph (c) are not met.

(1) At least 2 data points per hour must be used to calculate each 1-hour arithmetic average.

(2) Each sulfur dioxide 1-hour arithmetic average must be corrected to 7 percent oxygen on an hourly basis using the 1-hour arithmetic average of the oxygen (or carbon dioxide) continuous emission monitoring system data.

(d) For continuous emission monitoring systems for measuring nitrogen oxides emissions, valid continuous emission monitoring system hourly averages must be obtained as specified in paragraphs (d)(1) and (d)(2) of this section for a minimum of 85 percent of the hours per day, 90 percent of the hours per calendar quarter, and 95 percent of the hours per calendar year that the affected facility is combusting waste. All valid continuous emission monitoring system data must be used in calculating average emission concentrations and percent reductions even if the minimum continuous emission monitoring system data requirements of this paragraph (d) are not met.

(1) At least 2 data points per hour must be used to calculate each 1-hour arithmetic average.

(2) Each nitrogen oxides 1-hour arithmetic average must be corrected to 7 percent oxygen on an hourly basis using the 1-hour arithmetic average of the oxygen (or carbon dioxide) continuous emission monitoring system data.

(e) For continuous emission monitoring systems for measuring particulate matter emissions, valid continuous monitoring system hourly averages must be obtained as specified in paragraphs (e)(1) and (e)(2) of this section for a minimum of 85 percent of the hours per day, 90 percent of the hours per calendar quarter, and 95 percent of the hours per calendar year that the affected source is combusting waste. All valid continuous emission monitoring system data must be used in calculating average emission concentrations and percent reductions even if the minimum continuous emission monitoring system data requirements of this paragraph (e) are not met.

(1) At least 2 data points per hour must be used to calculate each one-hour arithmetic average.

(2) Each particulate matter one-hour arithmetic average must be corrected to 7 percent oxygen on an hourly basis using the one-hour arithmetic average of the oxygen (or carbon dioxide) continuous emission monitoring system data.

25. Section 60.2175 is amended by:

a. Revising the introductory text.

b. Revising paragraphs (b)(5) and (e).

c. Removing and reserving paragraphs (c) and (d).

d. Adding paragraphs (o) through (u).

§ 60.2175 What records must I keep?

You must maintain the items (as applicable) as specified in paragraphs (a), (b), and (e) through (u) of this section for a period of at least 5 years:

* * * * *

(b) * * *

(5) For affected CISWI units that establish operating limits for controls other than wet scrubbers under § 60.2110(d) through (f) or § 60.2115, you must maintain data collected for all operating parameters used to determine compliance with the operating limits.

* * * * *

(c) [Reserved]

(d) [Reserved]

(e) Identification of calendar dates and times for which data show a deviation from the operating limits in table 2 of this subpart or a deviation from other operating limits established under § 60.2110(d) through (f) or § 60.2115 with a description of the deviations, reasons for such deviations, and a description of corrective actions taken.

* * * * *

(o) Maintain records of the annual air pollution control device inspections that are required for each CISWI unit subject to the emissions limits in table 1 of this subpart or tables 5 through 9 of this subpart, any required maintenance and any repairs not completed within 10 days of an inspection or the timeframe established by the State regulatory agency.

(p) For continuously monitored pollutants or parameters, you must document and keep a record of the following parameters measured using continuous monitoring systems.

(1) All 6-minute average levels of opacity.

(2) All 1-hour average concentrations of sulfur dioxide emissions.

(3) All 1-hour average concentrations of nitrogen oxides emissions.

(4) All 1-hour average concentrations of carbon monoxide emissions.

(5) All one-hour average concentrations of particulate matter emissions.

(6) All one-hour average concentrations of mercury emissions.

(7) All one-hour average concentrations of hydrogen chloride emissions.

(q) Records indicating use of the bypass stack, including dates, times and durations.

(r) If you choose to stack test less frequently than annually, consistent with § 60.2155(a) through (c), you must keep annual records that document that your emissions in the previous stack test(s) were less than 75 percent of the applicable emission limit and document that there was no change in source operations including fuel composition and operation of air pollution control equipment that would cause emissions of the relevant pollutant to increase within the past year.

(s) Records of the occurrence and duration of each malfunction of operation (*i.e.,* process equipment) or the air pollution control and monitoring equipment.

(t) Records of all required maintenance performed on the air pollution control and monitoring equipment.

(u) Records of actions taken during periods of malfunction to minimize emissions in accordance with § 60.11(d), including corrective actions to restore malfunctioning process and air pollution control and monitoring equipment to its normal or usual manner of operation.

26. Section 60.2210 is amended by revising paragraph (e) and adding paragraphs (k) through (o) to read as follows:

§ 60.2210 What information must I include in my annual report?

* * * * *

(e) If no deviation from any emission limitation or operating limit that applies to you has been reported, a statement that there was no deviation from the emission limitations or operating limits during the reporting period.

* * * * *

(k) If you had a malfunction during the reporting period, the compliance report must include the number, duration, and a brief description for each type of malfunction that occurred during the reporting period and that caused or may have caused any applicable emission limitation to be exceeded. The report must also include a description of actions taken by an owner or operator during a malfunction of an affected source to minimize emissions in accordance with § 60.11(d), including actions taken to correct a malfunction.

(l) For each deviation from an emission or operating limitation that occurs for a CISWI unit for which you are not using a CMS to comply with the emission or operating limitations in this subpart, the annual report must contain the following information.

(1) The total operating time of the CISWI unit at which the deviation occurred during the reporting period.

(2) Information on the number, duration, and cause of deviations (including unknown cause, if applicable), as applicable, and the corrective action taken.

(m) If there were periods during which the continuous monitoring system, including the continuous emission monitoring system, was out of control as specified in paragraph (o) of this section, the annual report must contain the following information for each deviation from an emission or operating limitation occurring for a CISWI unit for which you are using a continuous monitoring system to comply with the emission and operating limitations in this subpart.

(1) The date and time that each malfunction started and stopped.

(2) The date, time, and duration that each CMS was inoperative, except for zero (low-level) and high-level checks.

(3) The date, time, and duration that each continuous monitoring system was out-of-control, including start and end dates and hours and descriptions of corrective actions taken.

(4) The date and time that each deviation started and stopped, and whether each deviation occurred during a period of malfunction or during another period.

(5) A summary of the total duration of the deviation during the reporting period, and the total duration as a percent of the total source operating time during that reporting period.

(6) A breakdown of the total duration of the deviations during the reporting period into those that are due to control equipment problems, process problems, other known causes, and other unknown causes.

(7) A summary of the total duration of continuous monitoring system downtime during the reporting period, and the total duration of continuous monitoring system downtime as a percent of the total operating time of the CISWI unit at which the continuous monitoring system downtime occurred during that reporting period.

(8) An identification of each parameter and pollutant that was monitored at the CISWI unit.

(9) A brief description of the CISWI unit.

(10) A brief description of the continuous monitoring system.

(11) The date of the latest continuous monitoring system certification or audit.

(12) A description of any changes in continuous monitoring system, processes, or controls since the last reporting period.

(n) If there were periods during which the continuous monitoring system, including the continuous emission monitoring system, was not out of control as specified in paragraph (o) of this section, a statement that there were not periods during which the continuous monitoring system was out of control during the reporting period.

(o) A continuous monitoring system is out of control if any of the following occur.

(1) The zero (low-level), mid-level (if applicable), or high-level calibration drift exceeds two times the applicable calibration drift specification in the applicable performance specification or in the relevant standard.

(2) The continuous monitoring system fails a performance test audit (*e.g.,* cylinder gas audit), relative accuracy audit, relative accuracy test audit, or linearity test audit.

(3) The continuous opacity monitoring system calibration drift exceeds two times the limit in the applicable performance specification in the relevant standard.

27. Section 60.2220 is amended by revising paragraph (c) and removing paragraphs (e) and (f).

§ 60.2220 What must I include in the deviation report?

* * * * *

(c) Durations and causes of the following:

(1) Each deviation from emission limitations or operating limits and your corrective actions.

(2) Bypass events and your corrective actions.

* * * * *

28. Section 60.2235 is revised to read as follows:

§ 60.2235 In what form can I submit my reports?

(a) Submit initial, annual and deviation reports electronically or in paper format, postmarked on or before the submittal due dates.

(b) After December 31, 2011, within 60 days after the date of completing each performance evaluation conducted to demonstrate compliance with this subpart, the owner or operator of the affected facility must submit the test data to EPA by entering the data electronically into EPA's WebFIRE database through EPA's Central Data Exchange. The owner or operator of an affected source shall enter the test data into EPA's database using the Electronic Reporting Tool or other compatible electronic spreadsheet. Only performance evaluation data collected using methods compatible with ERT are subject to this requirement to be submitted electronically into EPA's WebFIRE database.

29. Section 60.2242 is revised to read as follows:

§ 60.2242 Am I required to apply for and obtain a title V operating permit for my unit?

Yes. Each CISWI unit and air curtain incinerator affected by this subpart must operate pursuant to a permit issued under Section 129(e) and title V of the Clean Air Act.

30. Section 60.2250 is revised to read as follows:

§ 60.2250 What are the emission limitations for air curtain incinerators?

Within 60 days after your air curtain incinerator reaches the charge rate at which it will operate, but no later than 180 days after its initial startup, you must meet the two limitations specified in paragraphs (a) and (b) of this section.

(a) Maintain opacity to less than or equal to 10 percent opacity (as determined by the average of three one-hour blocks consisting of 10 six minute average opacity values), except as described in paragraph (b) of this section.

(b) Maintain opacity to less than or equal to 35 percent opacity (as determined by the average of three 1-hour blocks consisting of ten 6-minute average opacity values) during the startup period that is within the first 30 minutes of operation.

31. Section 60.2260 is amended by revising paragraph (d) to read as follows:

§ 60.2260 What are the recordkeeping and reporting requirements for air curtain incinerators?

* * * * *

(d) You must submit the results (as determined by the average of three 1-hour blocks consisting of ten 6-minute average opacity values) of the initial opacity tests no later than 60 days following the initial test. Submit annual opacity test results within 12 months following the previous report.

* * * * *

32. Section 60.2265 is amended by:

a. Adding definitions for "Burn-off oven", "Bypass stack", "Energy recovery unit", "Incinerator", "Kiln", "Minimum voltage or amperage", "Opacity", "Raw mill", "Small remote incinerator", "Solid waste incineration unit" and "Waste-burning kiln", in alphabetical order.

b. Revising the definitions for "Commercial and industrial solid waste incineration (CISWI) unit" and "Deviation".

c. Removing the definition for "Agricultural waste", "Commercial or industrial waste", "Malfunction" and "Solid waste".

§ 60.2265 What definitions must I know?

* * * * *

Burn-off oven means any rack reclamation unit, part reclamation unit, or drum reclamation unit.

Bypass stack means a device used for discharging combustion gases to avoid severe damage to the air pollution control device or other equipment.

* * * * *

Commercial and industrial solid waste incineration (CISWI) unit means any distinct operating unit of any commercial or industrial facility that combusts any solid waste pursuant to Subtitle D of RCRA. While not all CISWI units will include all of the following components, a CISWI unit includes, but is not limited to, the solid waste feed system, grate system, flue gas system, waste heat recovery equipment, if any, and bottom ash system. The CISWI unit does not include air pollution control equipment or the stack. The CISWI unit boundary starts at the solid waste hopper (if applicable) and extends through two areas: The combustion unit flue gas system, which ends immediately after the last combustion chamber or after the waste heat recovery equipment, if any; and the combustion unit bottom ash system, which ends at the truck loading station or similar equipment that transfers the ash to final disposal. The CISWI unit includes all ash handling systems connected to the bottom ash handling system.

* * * * *

Deviation means any instance in which an affected source subject to this subpart, or an owner or operator of such a source:

(1) Fails to meet any requirement or obligation established by this subpart, including but not limited to any emission limitation, operating limit, or operator qualification and accessibility requirements.

(2) Fails to meet any term or condition that is adopted to implement an applicable requirement in this subpart and that is included in the operating permit for any affected source required to obtain such a permit.

* * * * *

Energy recovery unit means a combustion unit combusting solid waste (as that term is defined by the Administrator pursuant to Subtitle D of RCRA) for energy recovery. Energy recovery units include units that would be considered boilers and process heaters if they did not combust solid waste.

* * * * *

Incinerator means any furnace used in the process of combusting solid waste (as that term is defined by the Administrator pursuant to Subtitle D of RCRA) for the purpose of reducing the volume of the waste by removing combustible matter. Incinerator designs include single chamber, two-chamber and cyclonic burn barrels.

* * * * *

Kiln means an oven or furnace, including any associated preheater or precalciner devices, used for processing a substance by burning, firing or drying. Kilns include cement kilns, that produce clinker by heating limestone and other materials for subsequent production of Portland cement and lime kilns that produce quicklime by calcination of limestone.

* * * * *

Minimum voltage or amperage means 90 percent of the lowest test-run average voltage or amperage to the electrostatic precipitator measured from the pressure drop and liquid flow rate monitors during the most recent particulate matter or mercury performance test demonstrating compliance with the applicable emission limits.

* * * * *

Opacity means the degree to which emissions reduce the transmission of light and obscure the view of an object in the background.

* * * * *

Raw mill means a ball and tube mill, vertical roller mill or other size reduction equipment, that is not part of an in-line kiln/raw mill, used to grind feed to the appropriate size. Moisture may be added or removed from the feed during the grinding operation. If the raw mill is used to remove moisture from

feed materials, it is also, by definition, a raw material dryer. The raw mill also includes the air separator associated with the raw mill.

* * * * *

Small, remote incinerator means an incinerator that combusts solid waste (as that term is defined by the Administrator pursuant to Subtitle D of RCRA) and has the capacity to combust 1 ton per day or less solid waste and is more than 50 miles driving distance to the nearest municipal solid waste landfill.

Solid waste incineration unit means a distinct operating unit of any facility which combusts any solid waste material from commercial or industrial establishments or the general public (including single and multiple residences, hotels and motels). Such term does not include incinerators or other units required to have a permit under section 3005 of the Solid Waste Disposal Act. The term "solid waste incineration unit" does not include (A) materials recovery facilities (including primary or secondary smelters) which combust waste for the primary purpose of recovering metals, (B) qualifying small power production facilities, as defined in section 3(17)(C) of the Federal Power Act (16 U.S.C. 769(17)(C)), or qualifying cogeneration facilities, as defined in section 3(18)(B) of the Federal Power Act (16 U.S.C. 796(18)(B)), which burn homogeneous waste (such as units which burn tires or used oil, but not including refuse-derived fuel) for the production of electric energy or in the case of qualifying cogeneration facilities which burn homogeneous waste for the production of electric energy and steam or forms of useful energy (such as heat) which are used for industrial, commercial, heating or cooling purposes, or (C) air curtain incinerators provided that such incinerators only burn wood wastes, yard wastes and clean lumber and that such air curtain incinerators comply with opacity limitations to be established by the Administrator by rule.

* * * * *

Waste-burning kiln means a kiln that is heated, in whole or in part, by combusting solid waste (as that term is defined by the Administrator pursuant to Subtitle D of RCRA).

* * * * *

33. The heading of table 1 to subpart CCCC is revised to read as follows:

Table 1 to Subpart CCCC of Part 60–Emission Limitations for CISWI Units for Which Construction Is Commenced After November 30, 1999 but no later than June 4, 2010 or for Which Modification or Reconstruction Is Commenced on or After June 1, 2001 but no later than [THE DATE 6 MONTHS AFTER PUBLICATION OF THE FINAL RULE].

* * * * *

34. Table 4 of subpart CCCC is amended by revising the entries for "Annual Report" and "Emission limitation or operating limit deviation report."

TABLE 4 TO SUBPART CCCC OF PART 60—SUMMARY OF REPORTING REQUIREMENTS [a]

Report	Due date	Contents	Reference
*	*	*	*
Annual report	No later than 12 months following the submission of the initial test report. Subsequent reports are to be submitted no more than 12 months following the previous report.	• Name and address • Statement and signature by responsible official. • Date of report. • Values for the operating limits. • Highest recorded 3-hour average and the lowest 3-hour average, as applicable, for each operating parameter recorded for the calendar year being reported. • If a performance test was conducted during the reporting period, the results of the test. • If a performance test was not conducted during the reporting period, a statement that the requirements of § 60.2155(a) or (b) were met. • Documentation of periods when all qualified CISWI unit operators were unavailable for more than 8 hours but less than 2 weeks.	§§ 60.2205 and 60.2210.
Emission limitation or operating limit deviation report.	By August 1 of that year for data collected during the first half of the calendar year. By February 1 of the following year for data collected during the second half of the calendar year.	• Dates and times of deviation • Averaged and recorded data for those dates. • Duration and causes of each deviation and the corrective actions taken. • Copy of operating limit monitoring data and any test reports. • Dates, times and causes for monitor downtime incidents.	§ 60.2215 and 60.2220.
*	*	*	*

[a] This table is only a summary, see the referenced sections of the rule for the complete requirements.

34. Table 5 to Subpart CCCC is added to read as follows:

TABLE 5 TO SUBPART CCCC OF PART 60—EMISSION LIMITATIONS FOR INCINERATORS THAT COMMENCED CONSTRUCTION AFTER JUNE 4, 2010 OR THAT COMMENCED RECONSTRUCTION OR MODIFICATION AFTER [THE DATE 6 MONTHS AFTER PUBLICATION OF THE FINAL RULE]

For the air pollutant	You must meet this emission limitation [a]	Using this averaging time	And determining compliance using this method
Cadmium	0.00066 milligrams per dry standard cubic meter.	3-run average (collect a minimum volume of 4 dry standard cubic meters).	Performance test (Method 29 of appendix A–8 of this part). Use ICPMS for the analytical finish.
Carbon monoxide	1.4 parts per million dry volume.	24-hour block average	Carbon Monoxide Continuous Emissions Monitoring System (performance specification 4A of this part, using a RA of 0.5 ppm instead of 5 ppm as specified in 13.2. For the cylinder gas audit, +/− 15% or 0.5 ppm, whichever is greater.)
Dioxins/furans (total mass basis).	0.0093 nanograms per dry standard cubic meter.	3-run average (collect a minimum volume of 4 dry standard cubic meters).	Performance test (Method 23 of appendix A–7 of this part).
Dioxins/furans (toxic equivalency basis).	0.00073 nanograms per dry standard cubic meter.	3-run average (collect a minimum volume of 4 dry standard cubic meters).	Performance test (Method 23 of appendix A–7 of this part).
Hydrogen chloride	0.074 parts per million dry volume.	3-run average (collect a minimum volume of 2 dry standard cubic meters).	Performance test (Method 26A of appendix A–8 of this part).
Lead	0.0013 milligrams per dry standard cubic meter.	3-run average (collect a minimum volume of 4 dry standard cubic meters).	Performance test (Method 29 of appendix A–8 of this part). Use ICPMS for the analytical finish.
Mercury	0.00013 milligrams per dry standard cubic meter.	3-run average (collect enough volume to meet a detection limit data quality objective of 0.03 ug/dscm).	Performance test (Method 30B of appendix A–8 of this part).
Opacity	1%	Three 1-hour blocks consisting of ten 6-minute average opacity values.	Performance test (Method 9 of appendix A–4 of this part).
Oxides of nitrogen	19 parts per million dry volume.	3-run average (1-hour minimum sample time per run).	Performance test (Method 7E of appendix A–4 of this part). Use a span gas with a concentration of 100 ppm or less.
Particulate matter (filterable)	0.0077 milligrams per dry standard cubic meter.	3-run average (collect a minimum volume of 2 dry standard cubic meters).	Performance test (Method 5 or 29 of appendix A–3 or appendix A–8 of this part).
Sulfur dioxide	1.5 parts per million dry volume.	3-run average (1-hour minimum sample time per run).	Performance test (Method 6 or 6c of appendix A–4 of this part. Use a maximum allowable drift of 0.2 ppm and a span gas with a concentration of 5 ppm or less.
Fugitive ash	Visible emissions for no more than 5% of the hourly observation period.	Three 1-hour observation periods.	Visible emission test (Method 22 of appendix A–7 of this part).

[a] All emission limitations (except for opacity) are measured at 7% oxygen, dry basis at standard conditions.

36. Table 6 to Subpart CCCC is added to read as follows:

TABLE 6 TO SUBPART CCCC OF PART 60—EMISSION LIMITATIONS FOR ENERGY RECOVERY UNITS THAT COMMENCED CONSTRUCTION AFTER JUNE 4, 2010 OR THAT COMMENCED RECONSTRUCTION OR MODIFICATION AFTER [THE DATE 6 MONTHS AFTER PUBLICATION OF THE FINAL RULE]

For the air pollutant	You must meet this emission limitation [a]	Using this averaging time	And determining compliance using this method
Cadmium	0.00012 milligrams per dry standard cubic meter.	3-run average (collect a minimum volume of 4 dry standard cubic meters).	Performance test (Method 29 of appendix A–8 of this part). Use ICPMS for the analytical finish.
Carbon monoxide	3 parts per million dry volume	24 hour block average	Carbon monoxide Continuous Emissions Monitoring System (performance specification 4A of this part, using a RA of 0.5 ppm instead of 5 ppm as specified in 13.2. For the cylinder gas audit, +/− 15% or 0.5 ppm, whichever is greater.)
Dioxins/furans (total mass basis).	0.034 nanograms per dry standard cubic meter.	3-run average (collect a minimum volume of 4 dry standard cubic meters).	Performance test (Method 23 of appendix A–7 of this part).

TABLE 6 TO SUBPART CCCC OF PART 60—EMISSION LIMITATIONS FOR ENERGY RECOVERY UNITS THAT COMMENCED CONSTRUCTION AFTER JUNE 4, 2010 OR THAT COMMENCED RECONSTRUCTION OR MODIFICATION AFTER [THE DATE 6 MONTHS AFTER PUBLICATION OF THE FINAL RULE]—Continued

For the air pollutant	You must meet this emission limitation [a]	Using this averaging time	And determining compliance using this method
Dioxins/furans (toxic equivalency basis).	0.0027 nanograms per dry standard cubic meter.	3-run average (collect a minimum volume of 4 dry standard cubic meters).	Performance test (Method 23 of appendix A–7 of this part).
Hydrogen chloride	0.17 parts per million dry volume.	3-run average (collect a minimum volume of 2 dry standard cubic meters).	Performance test (Method 26A of appendix A–8 of this part).
Lead	0.0012 milligrams per dry standard cubic meter.	3-run average (collect a minimum volume of 4 dry standard cubic meters).	Performance test (Method 29 of appendix A–8 of this part). Use ICPMS for the analytical finish.
Mercury	0.00013 milligrams per dry standard cubic meter.	3-run average (collect enough volume to meet a detection limit data quality objective of 0.03 μg/dscm).	Performance test (Method 30B of appendix A–8 of this part).
Opacity	1%	6-minute averages; 1-hour block average for units that operate dry control systems.	Continuous opacity monitoring (performance specification 1 of appendix B of this part), unless equipped with a wet scrubber.
Oxides of nitrogen	75 parts per million dry volume.	3-run average (1 hour minimum sample time per run).	Performance test (Method 7E of appendix A–4 of this part).
Particulate matter (filterable)	4.4 milligrams per dry standard cubic meter.	3-run average (collect a minimum volume of 2 dry standard cubic meters).	Performance test (Method 5 or 29 of appendix A–3 or appendix A–8 of this part) if the unit has a design capacity less than or equal to 250 MMBtu/hr; or PM CEMS (performance specification 11 of appendix B of this part) if the unit has a design capacity greater than 250 MMBtu/hr.
Sulfur dioxide	4.1 parts per million dry volume.	3-run average (1 hour minimum sample time per run).	Performance test (Method 6 or 6c of appendix A–4 of this part. Use a span gas with a concentration of 20 ppm or less.
Fugitive ash	Visible emissions for no more than 5% of the hourly observation period.	Three 1-hour observation periods.	Visible emission test (Method 22 of appendix A–7 of this part).

[a] All emission limitations (except for opacity) are measured at 7% oxygen, dry basis at standard conditions.

37. Table 7 to Subpart CCCC is added to read as follows:

TABLE 7 TO SUBPART CCCC OF PART 60—EMISSION LIMITATIONS FOR WASTE-BURNING KILNS THAT COMMENCED CONSTRUCTION AFTER JUNE 4, 2010 OR THAT COMMENCED RECONSTRUCTION OR MODIFICATION AFTER [THE DATE 6 MONTHS AFTER PUBLICATION OF THE FINAL RULE]

For the air pollutant	You must meet this emission limitation [a]	Using this averaging time	And determining compliance using this method
Cadmium	0.00030 milligrams per dry standard cubic meter.	3-run average (collect a minimum volume of 4 dry standard cubic meters).	Performance test (Method 29 of appendix A–8 of this part). Use ICPMS for the analytical finish.
Carbon monoxide	36 parts per million dry volume.	24-hour block average	Carbon monoxide Continuous Emissions Monitoring System (performance specification 4A of this part, using a RA of 1 ppm instead of 5 ppm as specified in 13.2. For the cylinder gas audit, +/− 15% or 0.5 ppm, whichever is greater.)
Dioxins/furans (total mass basis).	0.00035 nanograms per dry standard cubic meter.	3-run average (collect a minimum volume of 4 dry standard cubic meters).	Performance test (Method 23 of appendix A–7 of this part).
Dioxins/furans (toxic equivalency basis).	0.000028 nanograms per dry standard cubic meter.	3-run average (collect a minimum volume of 4 dry standard cubic meters).	Performance test (Method 23 of appendix A–7 of this part).
Hydrogen chloride	1.5 parts per million dry volume.	3-run average (collect a minimum volume of 1 dry standard cubic meter).	Performance test (Method 26A of appendix A–8 of this part).
Lead	0.00078 milligrams per dry standard cubic meter.	3-run average (collect a minimum volume of 4 dry standard cubic meters).	Performance test (Method 29 of appendix A–8 of this part). Use ICPMS for the analytical finish.

TABLE 7 TO SUBPART CCCC OF PART 60—EMISSION LIMITATIONS FOR WASTE-BURNING KILNS THAT COMMENCED CONSTRUCTION AFTER JUNE 4, 2010 OR THAT COMMENCED RECONSTRUCTION OR MODIFICATION AFTER [THE DATE 6 MONTHS AFTER PUBLICATION OF THE FINAL RULE]—Continued

For the air pollutant	You must meet this emission limitation [a]	Using this averaging time	And determining compliance using this method
Mercury	0.024 milligrams per dry standard cubic meter.	24-hour block average	Mercury CEMS (performance specification 12A of appendix B of this part or mercury sorbent trap method specified in appendix K of part 75)
Opacity	1%	Three 1-hour blocks consisting of ten 6-minute average opacity values.	Performance test (Method 9 of appendix A–4 of this part).
Oxides of nitrogen	140 parts per million dry volume.	3-run average (1 hour minimum sample time per run).	Performance test (Method 7E of appendix A–4 of this part).
Particulate matter (filterable)	1.8 milligrams per dry standard cubic meter.	3-run average (collect a minimum volume of 4 dry standard cubic meters).	Performance test (Method 5 or 29 of appendix A–3 or appendix A–8 of this part).
Sulfur dioxide	3.6 parts per million dry volume.	3-run average (1 hour minimum sample time per run).	Performance test (Method 6 or 6c of appendix A–4 of this part. Use a span gas with a concentration of 20 ppm or less.
Fugitive ash	Visible emissions for no more than 5% of the hourly observation period.	Three 1-hour observation periods.	Visible emission test (Method 22 of appendix A–7 of this part).

[a] All emission limitations (except for opacity) are measured at 7% oxygen, dry basis at standard conditions.

38. Table 8 to Subpart CCCC is added to read as follows:

TABLE 8 TO SUBPART CCCC OF PART 60—EMISSION LIMITATIONS FOR BURN-OFF OVENS THAT COMMENCED CONSTRUCTION AFTER JUNE 4, 2010 OR THAT COMMENCED RECONSTRUCTION OR MODIFICATION AFTER [THE DATE 6 MONTHS AFTER PUBLICATION OF THE FINAL RULE]

For the air pollutant	You must meet this emission limitation [a]	Using this averaging time	And determining compliance using this method
Cadmium	0.0032 milligrams per dry standard cubic meter.	3-run average (collect a minimum volume of 1 dry standard cubic meter).	Performance test (Method 29 of appendix A–8 of this part). Use ICPMS for the analytical finish.
Carbon monoxide	74 parts per million dry volume.	24 hour block average	Carbon monoxide Continuous Emissions Monitoring System (performance specification 4A of this part, using a RA of 2 ppm instead of 5 ppm as specified in 13.2. For the cylinder gas audit,±±15% or 0.5 ppm, whichever is greater.)
Dioxins/furans (total mass basis).	0.011 nanograms per dry standard cubic meter.	3-run average (collect a minimum volume of 4 dry standard cubic meters).	Performance test (Method 23 of appendix A–7 of this part).
Dioxins/furans (toxic equivalency basis).	0.00086 nanograms per dry standard cubic meter.	3-run average (collect a minimum volume of 4 dry standard cubic meters).	Performance test (Method 23 of appendix A–7 of this part).
Hydrogen chloride	17.6 parts per million dry volume.	3-run average (collect a minimum volume of 1 dry standard cubic meter).	Performance test (Method 26A of appendix A–8 of this part).
Lead	0.029 milligrams per dry standard cubic meter.	3-run average (collect a minimum volume of 1 dry standard cubic meter).	Performance test (Method 29 of appendix A–8 of this part). Use ICPMS for the analytical finish.
Mercury	0.0033 milligrams per dry standard cubic meter.	3-run average (collect enough volume to meet a detection limit data quality objective of 0.3 ug/dscm).	Performance test (Method 30B of appendix A–8 of this part).
Opacity	2%	Three 1-hour blocks consisting of ten 6-minute average opacity values.	Performance test (Method 9 of appendix A–4 of this part).
Oxides of nitrogen	16 parts per million dry volume.	3-run average (1 hour minimum sample time per run).	Performance test (Method 7E of appendix A–4 of this part). Use a span gas with a concentration of 100 ppm or less.
Particulate matter (filterable)	28 milligrams per dry standard cubic meter.	3-run average (collect a minimum volume of 1 dry standard cubic meter).	Performance test (Method 5 or 29 of appendix A–3 and appendix A–8 of this part).

TABLE 8 TO SUBPART CCCC OF PART 60—EMISSION LIMITATIONS FOR BURN-OFF OVENS THAT COMMENCED CONSTRUCTION AFTER JUNE 4, 2010 OR THAT COMMENCED RECONSTRUCTION OR MODIFICATION AFTER [THE DATE 6 MONTHS AFTER PUBLICATION OF THE FINAL RULE]—Continued

For the air pollutant	You must meet this emission limitation [a]	Using this averaging time	And determining compliance using this method
Sulfur dioxide	1.5 parts per million dry volume.	3-run average (1 hour minimum sample time per run).	Performance test (Method 6 or 6c of appendix A–4 of this part. Use a maximum allowable drift of 0.2 ppm and a span gas with concentration of 5 ppm or less.
Fugitive ash	Visible emissions for no more than 5% of the hourly observation period.	Three 1-hour observation periods.	Visible emission test (Method 22 of appendix A–7 of this part).

[a] All emission limitations (except for opacity) are measured at 7% oxygen, dry basis at standard conditions.

39. Table 9 to Subpart CCCC is added to read as follows:

TABLE 9 TO SUBPART CCCC OF PART 60—EMISSION LIMITATIONS FOR SMALL, REMOTE INCINERATORS THAT COMMENCED CONSTRUCTION AFTER JUNE 4, 2010 OR THAT COMMENCED RECONSTRUCTION OR MODIFICATION AFTER [THE DATE 6 MONTHS AFTER PUBLICATION OF THE FINAL RULE]

For the air pollutant	You must meet this emission limitation [a]	Using this averaging time	And determining compliance using this method
Cadmium	0.057 milligrams per dry standard cubic meter.	3-run average (collect a minimum volume of 1 dry standard cubic meter).	Performance test (Method 29 of appendix A–8 of this part). Use ICPMS for the analytical finish.
Carbon monoxide	4.0 parts per million dry volume	24 hour block average	Carbon monoxide Continuous Emissions Monitoring System (performance specification 4A of this part, using a RA of 0.5 ppm instead of 5 ppm as specified in 13.2. For the cylinder gas audit, ±15% or 0.5 ppm, whichever is greater).
Dioxins/furans (total mass basis).	1,200 nanograms per dry standard cubic meter.	3-run average (collect a minimum volume of 1 dry standard cubic meter).	Performance test (Method 23 of appendix A–7 of this part).
Dioxins/furans (toxic equivalency basis).	94 nanograms per dry standard cubic meter.	3-run average (collect a minimum volume of 1 dry standard cubic meter).	Performance test (Method 23 of appendix A–7 of this part).
Hydrogen chloride	150 parts per million dry volume	3-run average (collect a minimum volume of 1 dry standard cubic meter).	Performance test (Method 26 or 26A of appendix A–8 of this part).
Lead	1.4 milligrams per dry standard cubic meter.	3-run average (collect a minimum volume of 1 dry standard cubic meter).	Performance test (Method 29 of appendix A–8 of this part). Use ICPMS for the analytical finish.
Mercury	0.0013 milligrams per dry standard cubic meter.	3-run average (collect a minimum volume of 1 dry standard cubic meter).	Performance test (Method 29 of appendix A–8 of this part).
Opacity	13%	Three 1-hour blocks consisting of ten 6-minute average opacity values.	Performance test (Method 9 of appendix A–4 of this part).
Oxides of nitrogen	210 parts per million dry volume	3-run average (1 hour minimum sample time per run).	Performance test (Method 7E of appendix A–4 of this part).
Particulate matter (filterable).	240 milligrams per dry standard cubic meter.	3-run average (collect a minimum volume of 1 dry standard cubic meter).	Performance test (Method 5 or 29 of appendix A–3 or appendix A–8 of this part).
Sulfur dioxide	43 parts per million dry volume	3-run average (1 hour minimum sample time per run).	Performance test (Method 6 or 6c of appendix A–4 of this part. Use a span gas with a concentration of 200 ppm or less.
Fugitive ash	Visible emissions for no more than 5% of the hourly observation period.	Three 1-hour observation periods	Visible emission test (Method 22 of appendix A–7 of this part).

[a] All emission limitations (except for opacity) are measured at 7% oxygen, dry basis at standard conditions.

Subpart DDDD—Emissions Guidelines and Compliance Times for Commercial and Industrial Solid Waste Incineration Units

40. Section 60.2500 is revised to read as follows:

§ 60.2500 What is the purpose of this subpart?

This subpart establishes emission guidelines and compliance schedules for the control of emissions from commercial and industrial solid waste incineration (CISWI) units. The pollutants addressed by these emission guidelines are listed in table 2 of this subpart and tables 6 through 10 of this subpart. These emission guidelines are developed in accordance with sections 111(d) and 129 of the Clean Air Act and subpart B of this part.

41. Section 60.2505 is revised to read as follows.

§ 60.2505 Am I affected by this subpart?

(a) If you are the Administrator of an air quality program in a State or United States protectorate with one or more existing CISWI units that meets the criteria in paragraphs (b) through (d) of this section, you must submit a State plan to U.S. Environmental Protection Agency (EPA) that implements the emission guidelines contained in this subpart.

(b) You must submit a State plan to EPA by December 3, 2001 for incinerators that commenced construction on or before November 30, 1999 and that were not modified or reconstructed after June 1, 2001.

(c) You must submit a State plan that meets the requirements of this subpart and contains the more stringent emission limit for the respective pollutant in table 6 of this subpart or table 1 of subpart CCCC of this part to EPA by [THE DATE 1 YEAR AFTER PUBLICATION OF THE FINAL RULE IN THE FEDERAL REGISTER] for incinerators that commenced construction after November 30, 1999 but no later than June 4, 2010 or commenced modification or reconstruction after June 1, 2001 but no later than [THE DATE 6 MONTHS AFTER PUBLICATION OF THE FINAL RULE IN THE FEDERAL REGISTER].

(d) You must submit a State plan to EPA that meets the requirements of this subpart and contains the emission limits in tables 7 through 10 of this subpart by [THE DATE 1 YEAR AFTER PUBLICATION OF THE FINAL RULE IN THE FEDERAL REGISTER] for CISWI units other than incinerators that commenced construction on or before June 4, 2010.

41. Section 60.2525 is revised to read as follows:

§ 60.2525 What if my State plan is not approvable?

(a) If you do not submit an approvable State plan (or a negative declaration letter) by December 2, 2002, EPA will develop a Federal plan according to § 60.27 to implement the emission guidelines contained in this subpart. Owners and operators of CISWI units not covered by an approved State plan must comply with the Federal plan. The Federal plan is an interim action and will be automatically withdrawn when your State plan is approved.

(b) If you do not submit an approvable State plan (or a negative declaration letter) to EPA that meets the requirements of this subpart and contains the emission limits in tables 6 through 10 of this subpart for CISWI units that commenced construction after November 30, 1999, but on or before by [THE DATE OF PUBLICATION OF THE FINAL RULE IN THE FEDERAL REGISTER] by [THE DATE 1 YEAR AFTER THE DATE OF PUBLICATION OF THE FINAL RULE IN THE FEDERAL REGISTER], then EPA will develop a Federal plan according to § 60.27 to implement the emission guidelines contained in this subpart. Owners and operators of CISWI units not covered by an approved State plan must comply with the Federal plan. The Federal plan is an interim action and will be automatically withdrawn when your State plan is approved.

43. Section 60.2535 is amended by:

a. Revising paragraph (a) introductory text.

b. Redesignating paragraph (b) as paragraph (c).

c. Adding paragraph (b).

§ 60.2535 What compliance schedule must I include in my state plan?

(a) For CISWI units in the incinerator subcategory that commenced construction on or before November 30, 1999, your State plan must include compliance schedules that require CISWI units to achieve final compliance as expeditiously as practicable after approval of the state plan but not later than the earlier of the two dates specified in paragraphs (a)(1) and (2) of this section.

* * * * *

(b) For CISWI units in the incinerator subcategory that commenced construction after November 30, 1999, but on or before June 4, 2010, and for CISWI units in the energy recovery units, waste-burning kilns, burn-off ovens, and small remote incinerators subcategories that commenced construction before June 4, 2010, your state plan must include compliance schedules that require CISWI units to achieve final compliance as expeditiously as practicable after approval of the state plan but not later than the earlier of the two dates specified in paragraphs (b)(1) and (b)(2) of this section.

(1) [THE DATE 5 YEARS AFTER PUBLICATION OF THE FINAL RULE IN THE FEDERAL REGISTER].

(2) 3 years after the effective date of state plan approval.

* * * * *

44. Section 60.2540 is amended by revising paragraph (a) to read as follows:

§ 60.2540 Are there any state plan requirements for this subpart that apply instead of the requirements specified in subpart B?

* * * * *

(a) State plans developed to implement this subpart must be as protective as the emission guidelines contained in this subpart. State plans must require all CISWI units to comply by the dates specified in § 60.2535. This applies instead of the option for case-by-case less stringent emission standards and longer compliance schedules in § 60.24(f).

* * * * *

45. Section 60.2541 is added to read as follows:

§ 60.2541 In lieu of a state plan submittal, are there other acceptable option(s) for a state to meet its Section 111(d)/129(b)(2) obligations?

Yes, a state may meet its Clean Air Act Section 111(d)/129 obligations by submitting an acceptable written request for delegation of the Federal plan that meets the requirements of this section. This is the only other option for a state to meet its Clean Air Act Section 111(d)/129 obligations.

(a) An acceptable Federal plan delegation request must include the following:

(1) A demonstration of adequate resources and legal authority to administer and enforce the Federal plan.

(2) The items under § 60.2515(a)(1), (2) and (7).

(3) Certification that the hearing on the state delegation request, similar to the hearing for a state plan submittal, was held, a list of witnesses and their organizational affiliations, if any, appearing at the hearing, and a brief written summary of each presentation or written submission.

(4) A commitment to enter into a Memorandum of Agreement with the Regional Administrator that sets forth the terms, conditions and effective date of the delegation and that serves as the mechanism for the transfer of authority. Additional guidance and information is given in EPA's Delegation Manual, Item 7–139, Implementation and Enforcement of 111(d)(2) and 111(d)/(2)/129(b)(3) Federal plans.

(b) A State with an already approved CISWI Clean Air Act Section 111(d)/129 state plan is not precluded from receiving EPA approval of a delegation request for the revised Federal plan, providing the requirements of paragraph (a) of this section are met, and at the time of the delegation request, the state also requests withdrawal of EPA's previous State plan approval.

(c) A state's Clean Air Act Section 111(d)/129 obligations are separate from its obligations under title V of the Clean Air Act.

46. Section 60.2542 is added to read as follows:

§ 60.2542 What authorities will not be delegated to state, local, or Tribal agencies?

The authorities listed under § 60.2030(c) will not be delegated to state, local, or Tribal agencies.

47. Section 60.2545 is amended by adding paragraph (c) to read as follows:

§ 60.2545 Does this subpart directly affect CISWI unit owners and operators in my state?

* * * * *

(c) If you do not submit an approvable plan to implement and enforce the guidelines contained in this subpart by [THE DATE 1 YEAR AFTER PUBLICATION OF THE FINAL RULE IN THE FEDERAL REGISTER] for CISWI units that commenced construction after November 30, 1999, but on or before [THE DATE OF PUBLICATION OF THE FINAL RULE IN THE FEDERAL REGISTER], the EPA will implement and enforce a Federal plan, as provided in § 60.2525, to ensure that each unit within your state that commenced construction after November 30, 1999, but on or before by [THE DATE OF PUBLICATION OF THE FINAL RULE IN THE FEDERAL REGISTER], reaches compliance with all the provisions of this subpart by [THE DATE 5 YEARS AFTER PUBLICATION OF THE FINAL RULE IN THE FEDERAL REGISTER].

48. Section § 60.2555 is amended by:

a. Revising the introductory text.

b. Removing and reserving paragraph (b).

c. Revising paragraphs (c) and (g).

d. Removing and reserving paragraphs (j), (k) and (l).

e. Revising paragraphs (m) and (n).

f. Removing paragraph (o).

§ 60.2555 What combustion units are exempt from my state plan?

This subpart exempts the types of units described in paragraphs (a), (c) through (i) and (m) of this section, but some units are required to provide notifications. Air curtain incinerators are exempt from the requirements in this subpart except for the provisions in §§ 60.2805, 60.2860, and 60.2870.

* * * * *

(b) [Reserved]

(c) *Municipal waste combustion units.* Incineration units that are regulated under subpart Ea of this part (Standards of Performance for Municipal Waste Combustors); subpart Eb of this part (Standards of Performance for Large Municipal Waste Combustors); subpart Cb of this part (Emission Guidelines and Compliance Time for Large Municipal Combustors); AAAA of this part (Standards of Performance for Small Municipal Waste Combustion Units); or subpart BBBB of this part (Emission Guidelines for Small Municipal Waste Combustion Units).

* * * * *

(g) *Hazardous waste combustion units.* Units for which you are required to get a permit under section 3005 of the Solid Waste Disposal Act.

* * * * *

(j) [Reserved]

(k) [Reserved]

(l) [Reserved]

(m) *Sewage treatment plants.* Incineration units regulated under subpart O of this part (Standards of Performance for Sewage Treatment Plants).

(n) *Sewage sludge incineration units.* Incineration units combusting sewage sludge for the purpose of reducing the volume of the sewage sludge by removing combustible matter. Sewage sludge incineration unit designs may include fluidized bed and multiple hearth.

§ 60.2558 [Removed]

49. Section 60.2558 is removed.

50. Section 60.2635 is amended by revising paragraph (c)(1)(vii) to read as follows:

§ 60.2635 What are the operator training and qualification requirements?

* * * * *

(c) * * *

(1) * * *

(vii) Actions to prevent malfunctions or to prevent conditions that may lead to malfunctions.

* * * * *

51. Section 60.2650 is amended by revising paragraph (d) to read as follows:

§ 60.2650 How do I maintain my operator qualification?

* * * * *

(d) Prevention of malfunctions or conditions that may lead to malfunction.

* * * * *

52. Section 60.2670 is revised to read as follows:

§ 60.2670 What emission limitations must I meet and by when?

(a) You must meet the emission limitations for each unit, including bypass stack or vent, specified in table 2 of this subpart or tables 6 through 10 of this subpart by the final compliance date under the approved State plan, Federal plan, or delegation, as applicable. The emission limitations apply at all times the unit is operating including and not limited to startup, shutdown, or malfunction.

(b) Units that do not use wet scrubbers must maintain opacity to less than or equal to the percent opacity (1-hour block average) specified in table 2 of this subpart or tables 6 through 10 of this subpart, as applicable.

53. Section 60.2675 is amended by adding paragraphs (d), (e) and (f) to read as follows:

§ 60.2675 What operating limits must I meet and by when?

* * * * *

(d) If you use an electrostatic precipitator to comply with the emission limitations, you must measure the voltage and amperage of the electrostatic precipitator collection plates during the particulate matter performance test. Calculate the average value of these parameters for each test run. The minimum test run averages establish your site-specific minimum voltage and amperage operating limits for the electrostatic precipitator.

(e) If you use activated carbon injection to comply with the emission limitations, you must measure the mercury sorbent flow rate during the mercury performance test. The minimum mercury sorbent flow rate test run averages establish your site-specific minimum mercury sorbent flow rate.

(f) If you use selective noncatalytic reduction to comply with the emission limitations, you must establish the maximum charge rate, the minimum secondary chamber temperature (if applicable to your CISWI unit) and the minimum reagent flow rate as site-specific operating parameters during the initial nitrogen oxides performance test to determine compliance with the emissions limits.

54. Section 60.2680 is revised to read as follows:

§ 60.2680 What if I do not use a wet scrubber, activated carbon injection, selective noncatalytic reduction, or an electrostatic precipitator to comply with the emission limitations?

(a) If you use an air pollution control device other than a wet scrubber, activated carbon injection, selective noncatalytic reduction, or an electrostatic precipitator or limit emissions in some other manner to comply with the emission limitations under § 60.2670, you must petition the Administrator for specific operating limits to be established during the initial performance test and continuously monitored thereafter. You must not conduct the initial performance test until after the petition has been approved by the Administrator. Your petition must include the five items listed in paragraphs (a)(1) through (a)(5) of this section.

(1) Identification of the specific parameters you propose to use as additional operating limits.

(2) A discussion of the relationship between these parameters and emissions of regulated pollutants, identifying how emissions of regulated pollutants change with changes in these parameters and how limits on these parameters will serve to limit emissions of regulated pollutants.

(3) A discussion of how you will establish the upper and/or lower values for these parameters which will establish the operating limits on these parameters.

(4) A discussion identifying the methods you will use to measure and the instruments you will use to monitor these parameters, as well as the relative accuracy and precision of these methods and instruments.

(5) A discussion identifying the frequency and methods for recalibrating the instruments you will use for monitoring these parameters.

(b) For energy recovery units that do not use a wet scrubber, you must install, operate, certify and maintain a continuous opacity monitoring system according to the procedures in § 60.2710 by the compliance date specified in § 60.2670.

§ 60.2685 [Removed]

55. Section 60.2685 is removed.

56. Section 60.2690 is amended by revising paragraph (c) and adding paragraphs (h) through (n) to read as follows:

§ 60.2690 How do I conduct the initial and annual performance test?

* * * * *

(c) All performance tests must be conducted using the minimum run duration specified in tables 2 and 6 through 10 of this subpart.

* * * * *

(h) Method 22 of appendix A–7 of this part must be used to determine compliance with the fugitive ash emission limit in table 2 of this subpart or tables 6 through 10 of this subpart.

(i) Except as specified in paragraphs (i)(1), (i)(2), (i)(3), and (i)(4) of this section, within 60 days after achieving the maximum production rate at which the affected facility will be operated, but not later than 180 days after initial startup of such facility, or at such other times specified by this part, and at such other times as may be required by the Administrator under Section 114 of the Clean Air Act, the owner or operator of such facility must conduct performance test(s) and furnish the Administrator a written report of the results of such performance test(s).

(1) If a force majeure is about to occur, occurs, or has occurred for which the affected owner or operator intends to assert a claim of force majeure, the owner or operator must notify the Administrator, in writing as soon as practicable following the date the owner or operator first knew, or through due diligence should have known that the event may cause or caused a delay in testing beyond the regulatory deadline, but the notification must occur before the performance test deadline unless the initial force majeure or a subsequent force majeure event delays the notice, and in such cases, the notification must occur as soon as practicable.

(2) The owner or operator must provide to the Administrator a written description of the force majeure event and a rationale for attributing the delay in testing beyond the regulatory deadline to the force majeure; describe the measures taken or to be taken to minimize the delay; and identify a date by which the owner or operator proposes to conduct the performance test. The performance test must be conducted as soon as practicable after the force majeure occurs.

(3) The decision as to whether or not to grant an extension to the performance test deadline is solely within the discretion of the Administrator. The Administrator will notify the owner or operator in writing of approval or disapproval of the request for an extension as soon as practicable.

(4) Until an extension of the performance test deadline has been approved by the Administrator under paragraphs (i)(1), (2), and (3) of this section, the owner or operator of the affected facility remains strictly subject to the requirements of this part.

(j) Performance tests must be conducted and data reduced in accordance with the test methods and procedures contained in this subpart unless the Administrator does one of the following.

(1) Specifies or approves, in specific cases, the use of a reference method with minor changes in methodology.

(2) Approves the use of an equivalent method.

(3) Approves the use of an alternative method the results of which he has determined to be adequate for indicating whether a specific source is in compliance.

(4) Waives the requirement for performance tests because the owner or operator of a source has demonstrated by other means to the Administrator's satisfaction that the affected facility is in compliance with the standard.

(5) Approves shorter sampling times and smaller sample volumes when necessitated by process variables or other factors. Nothing in this paragraph is construed to abrogate the Administrator's authority to require testing under Section 114 of the Clean Air Act.

(k) Performance tests must be conducted under such conditions as the Administrator shall specify to the plant operator based on representative performance of the affected facility. The owner or operator must make available to the Administrator such records as may be necessary to determine the conditions of the performance tests.

(l) The owner or operator of an affected facility must provide the Administrator at least 30 days prior notice of any performance test, except as specified under other subparts, to afford the Administrator the opportunity to have an observer present. If after 30 days notice for an initially scheduled performance test, there is a delay (due to operational problems, *etc.*) in conducting the scheduled performance test, the owner or operator of an affected facility must notify the Administrator (or delegated state or local agency) as soon as possible of any delay in the original test date, either by providing at least 7 days prior notice of the rescheduled date of the performance test, or by arranging a rescheduled date with the Administrator (or delegated state or local agency) by mutual agreement.

(m) The owner or operator of an affected facility must provide, or cause to be provided, performance testing facilities as follows:

(1) Sampling ports adequate for test methods applicable to such facility. This includes the following:

(i) Constructing the air pollution control system such that volumetric flow rates and pollutant emission rates can be accurately determined by applicable test methods and procedures.

(ii) Providing a stack or duct free of cyclonic flow during performance tests, as demonstrated by applicable test methods and procedures.

(2) Safe sampling platform(s).

(3) Safe access to sampling platform(s).

(4) Utilities for sampling and testing equipment.

(n) Unless otherwise specified in this subpart, each performance test must consist of three separate runs using the applicable test method. Each run must be conducted for the time and under the conditions specified in the applicable standard. For the purpose of determining compliance with an applicable standard, the arithmetic means of results of the three runs apply. In the event that a sample is

accidentally lost or conditions occur in which one of the three runs must be discontinued because of forced shutdown, failure of an irreplaceable portion of the sample train, extreme meteorological conditions, or other circumstances, beyond the owner or operator's control, compliance may, upon the Administrator's approval, be determined using the arithmetic mean of the results of the two other runs.

57. Section 60.2695 is revised to read as follows:

§ 60.2695 How are the performance test data used?

You use results of performance tests to demonstrate compliance with the emission limitations in table 2 of this subpart or tables 6 through 10 of this subpart.

58. Section 60.2700 is revised to read as follows:

§ 60.2700 How do I demonstrate initial compliance with the amended emission limitations and establish the operating limits?

(a) You must conduct an initial performance test, as required under § 60.2690 and § 60.2670, to determine compliance with the emission limitations in table 2 of this subpart and tables 6 through 10 of this subpart and to establish operating limits using the procedures in § 60.2675 or § 60.2680. The initial performance test must be conducted using the test methods listed in table 2 of this subpart and tables 6 through 10 of this subpart and the procedures in § 60.2690. The use of the bypass stack during a performance test shall invalidate the performance test.

(b) You may use the results from a performance test conducted within the two previous years that demonstrated compliance with the emission limits in table 2 of this subpart or tables 5 through 9 of this subpart. However, you must continue to meet the operating limits established during the most recent performance test that demonstrated compliance with the emission limits in table 2 of this subpart or tables 5 through 9 of this subpart. The test must use the test methods in table 2 of this subpart or tables 5 through 9 of this subpart.

59. Section 60.2706 is added to read as follows:

§ 60.2706 By what date must I conduct the initial air pollution control device inspection?

(a) The initial air pollution control device inspection must be conducted within 60 days after installation of the control device and the associated CISWI unit reaches the charge rate at which it will operate, but no later than 180 days after the final compliance date for meeting the amended emission limitations.

(b) Within 10 operating days following an air pollution control device inspection, all necessary repairs must be completed unless the owner or operator obtains written approval from the state agency establishing a date whereby all necessary repairs of the designated facility must be completed.

60. Section 60.2710 is amended by revising paragraphs (a) and (b) and adding paragraphs (d) through (t) to read as follows:

§ 60.2710 How do I demonstrate continuous compliance with the amended emission limitations and the operating limits?

(a) You must conduct an annual performance test for particulate matter, hydrogen chloride, fugitive ash and opacity for each CISWI unit as required under § 60.2690 to determine compliance with the emission limitations. The annual performance test must be conducted using the test methods listed in table 2 of this subpart or tables 6 through 10 of this subpart and the procedures in § 60.2690.

(b) You must continuously monitor the operating parameters specified in § 60.2675 or established under § 60.2680. Operation above the established maximum or below the established minimum operating limits constitutes a deviation from the established operating limits. Three-hour rolling average values are used to determine compliance (except for baghouse leak detection system alarms) unless a different averaging period is established under § 60.2680. Operating limits are confirmed or reestablished during performance tests.

* * * * *

(d) For energy recovery units, incinerators, burn-off ovens and small remote units, you must perform annual visual emissions test for ash handling.

(e) For energy recovery units, you must conduct an annual performance test for opacity (except where particulate matter continuous emissions monitoring systems are used for compliance) and the pollutants (except for carbon monoxide) listed in table 2 of this subpart and tables 6 through 10 of this subpart.

(f) For energy recovery units, demonstrate continuous compliance with the carbon monoxide emission limit using a carbon monoxide continuous emissions monitoring system according to the following requirements:

(1) Determine continuous compliance with the carbon monoxide emissions limit using a 24-hour block average, calculated as specified in section 12.4.1 of EPA Reference Method 19 of appendix A–7 of this part.

(2) Operate the carbon monoxide continuous emissions monitoring system in accordance with the applicable requirements of performance specification 4B of appendix B and the quality assurance procedures of appendix F of this part.

(g) For energy recovery units with design capacities greater than 250 MMBtu/hr, demonstrate continuous compliance with the particulate matter emissions limit using a particulate matter continuous emissions monitoring system according to the procedures in § 60.2730(n).

(h) For waste-burning kilns, you must conduct an annual performance test for particulate matter, hydrogen chloride, fugitive ash and opacity (as mentioned in section 60.2710(a)), nitrogen oxides and sulfur dioxide as listed in table 8 of this subpart. You must determine compliance with the mercury emissions limit using a mercury continuous emissions monitoring system according to the following requirements:

(1) Operate a continuous emission monitor in accordance with performance specification 12A of 40 CFR part 60, appendix B or a sorbent trap based integrated monitor in accordance with performance specification 12B of 40 CFR part 60, appendix B or appendix K of 40 CFR part 75. The duration of the performance test must be a calendar month. For each calendar month in which the waste-burning kiln operates, hourly mercury concentration data and stack gas volumetric flow rate data must be obtained.

(2) Owners or operators using a mercury continuous emissions monitoring system must install, operate, calibrate and maintain an instrument for continuously measuring and recording the exhaust gas flow rate to the atmosphere according to the requirements of performance specification 12A of 40 CFR part 60, appendix B and quality assurance procedure 5 of 40 CFR part 60, appendix F, upon promulgation.

(3) The owner or operator of a waste-burning kiln must demonstrate initial compliance by operating a mercury continuous emission monitor while the raw mill of the in-line kiln/raw mill is under normal operating conditions and while the raw mill of the in-line kiln/raw mill is not operating.

(i) If you use an air pollution control device to meet the emission limitations in this subpart, you must conduct an initial and annual inspection of the air

pollution control device. The inspection must include, at a minimum, the following:

(1) Inspect air pollution control device(s) for proper operation.

(2) Develop a site-specific monitoring plan according to the requirements in paragraph (j) of this section. This requirement also applies to you if you petition the EPA Administrator for alternative monitoring parameters under § 60.13(i).

(j) For each continuous monitoring system required in this section, you must develop and submit to the EPA Administrator for approval a site-specific monitoring plan according to the requirements of this paragraph (j) that addresses paragraphs (j)(1)(i) through (vi) of this section.

(1) You must submit this site-specific monitoring plan at least 60 days before your initial performance evaluation of your continuous monitoring system.

(i) Installation of the continuous monitoring system sampling probe or other interface at a measurement location relative to each affected process unit such that the measurement is representative of control of the exhaust emissions (*e.g.,* on or downstream of the last control device).

(ii) Performance and equipment specifications for the sample interface, the pollutant concentration or parametric signal analyzer and the data collection and reduction systems.

(iii) Performance evaluation procedures and acceptance criteria (*e.g.,* calibrations).

(iv) Ongoing operation and maintenance procedures in accordance with the general requirements of § 60.11(d).

(v) Ongoing data quality assurance procedures in accordance with the general requirements of § 60.13.

(vi) Ongoing recordkeeping and reporting procedures in accordance with the general requirements of § 60.7(b), (c), (c)(1), (c)(4), (d), (e), (f) and (g).

(2) You must conduct a performance evaluation of each continuous monitoring system in accordance with your site-specific monitoring plan.

(3) You must operate and maintain the continuous monitoring system in continuous operation according to the site-specific monitoring plan.

(k) If you have an operating limit that requires the use of a flow measurement device, you must meet the requirements in paragraphs (j) and (k)(1) through (4) of this section.

(1) Locate the flow sensor and other necessary equipment in a position that provides a representative flow.

(2) Use a flow sensor with a measurement sensitivity of 2 percent of the flow rate.

(3) Reduce swirling flow or abnormal velocity distributions due to upstream and downstream disturbances.

(4) Conduct a flow sensor calibration check at least semiannually.

(l) If you have an operating limit that requires the use of a pressure measurement device, you must meet the requirements in paragraphs (j) and (l)(1) through (6) of this section.

(1) Locate the pressure sensor(s) in a position that provides a representative measurement of the pressure.

(2) Minimize or eliminate pulsating pressure, vibration and internal and external corrosion.

(3) Use a gauge with a minimum tolerance of 1.27 centimeters of water or a transducer with a minimum tolerance of 1 percent of the pressure range.

(4) Check pressure tap pluggage daily.

(5) Using a manometer, check gauge calibration quarterly and transducer calibration monthly.

(6) Conduct calibration checks any time the sensor exceeds the manufacturer's specified maximum operating pressure range or install a new pressure sensor.

(m) If you have an operating limit that requires the use of a pH measurement device, you must meet the requirements in paragraphs (j) and (m)(1) through (3) of this section.

(1) Locate the pH sensor in a position that provides a representative measurement of scrubber effluent pH.

(2) Ensure the sample is properly mixed and representative of the fluid to be measured.

(3) Check the pH meter's calibration on at least two points every 8 hours of process operation.

(n) If you have an operating limit that requires the use of equipment to monitor voltage and secondary current (or total power input) of an electrostatic precipitator, you must use voltage and secondary current monitoring equipment to measure voltage and secondary current to the electrostatic precipitator.

(o) If you have an operating limit that requires the use of equipment to monitor sorbent injection rate (*e.g.,* weigh belt, weigh hopper, or hopper flow measurement device), you must meet the requirements in paragraphs (j) and (o)(1) through (3) of this section.

(1) Locate the device in a position(s) that provides a representative measurement of the total sorbent injection rate.

(2) Install and calibrate the device in accordance with manufacturer's procedures and specifications.

(3) At least annually, calibrate the device in accordance with the manufacturer's procedures and specifications.

(p) If you elect to use a fabric filter bag leak detection system to comply with the requirements of this subpart, you must install, calibrate, maintain and continuously operate a bag leak detection system as specified in paragraphs (p)(1) through (8) of this section.

(1) You must install and operate a bag leak detection system for each exhaust stack of the fabric filter.

(2) Each bag leak detection system must be installed, operated, calibrated and maintained in a manner consistent with the manufacturer's written specifications and recommendations and in accordance with the guidance provided in EPA–454/R–98–015, September 1997.

(3) The bag leak detection system must be certified by the manufacturer to be capable of detecting particulate matter emissions at concentrations of 10 milligrams per actual cubic meter or less.

(4) The bag leak detection system sensor must provide output of relative or absolute particulate matter loadings.

(5) The bag leak detection system must be equipped with a device to continuously record the output signal from the sensor.

(6) The bag leak detection system must be equipped with an alarm system that will sound automatically when an increase in relative particulate matter emissions over a preset level is detected. The alarm must be located where it is easily heard by plant operating personnel.

(7) For positive pressure fabric filter systems that do not duct all compartments of cells to a common stack, a bag leak detection system must be installed in each baghouse compartment or cell.

(8) Where multiple bag leak detectors are required, the system's instrumentation and alarm may be shared among detectors.

(q) For facilities using a continuous emissions monitoring system to demonstrate compliance with the sulfur dioxide emission limit, compliance with the sulfur dioxide emission limit may be demonstrated by using the continuous emission monitoring system specified in § 60.2165 to measure sulfur dioxide and calculating a 24-hour daily geometric average emission concentration using EPA Reference Method 19, sections 4.3 and 5.4, as applicable. The sulfur dioxide continuous emission monitoring system must be operated according to performance specification

2 in appendix B of this part and must follow the procedures and methods specified in this paragraph (q). For sources that have actual inlet emissions less than 100 parts per million dry volume, the relative accuracy criterion for inlet sulfur dioxide continuous emission monitoring systems should be no greater than 20 percent of the mean value of the reference method test data in terms of the units of the emission standard, or 5 parts per million dry volume absolute value of the mean difference between the reference method and the continuous emission monitoring systems, whichever is greater.

(1) During each relative accuracy test run of the continuous emission monitoring system required by performance specification 2 in appendix B of this part, sulfur dioxide and oxygen (or carbon dioxide) data must be collected concurrently (or within a 30- to 60-minute period) by both the continuous emission monitors and the test methods specified in paragraphs (q)(1)(i) and (q)(1)(ii) of this section.

(i) For sulfur dioxide, EPA Reference Method 6, 6A, or 6C, or as an alternative ANSI/ASME PTC–19.10–1981—Flue and Exhaust Gas Analysis [Part 10, Instruments and Apparatus] (incorporated by reference, see § 60.17] must be used.

(ii) For oxygen (or carbon dioxide), EPA Method 3, 3A, or 3B, or as an alternative ANSI/ASME PTC–19–10–1981—Flue and Exhaust Gas Analysis [Part 10, Instruments and Apparatus] (incorporated by reference, see § 60.17] as applicable, must be used.

(2) The span value of the continuous emissions monitoring system at the inlet to the sulfur dioxide control device must be 125 percent of the maximum estimated hourly potential sulfur dioxide emissions of the unit subject to this rule. The span value of the continuous emission monitoring system at the outlet of the sulfur dioxide control device must be 50 percent of the maximum estimated hourly potential sulfur dioxide emissions of the unit subject to this rule.

(3) Quarterly accuracy determinations and daily calibration drift tests must be performed in accordance with procedure 1 in appendix F of this part.

(4) When sulfur dioxide emissions data are not obtained because of continuous emission monitoring system breakdowns, repairs, calibration checks and/or zero and span adjustments, emissions data must be obtained by using other monitoring systems as approved by EPA or EPA Reference Method 19 to provide, as necessary, valid emissions data for a minimum of 85 percent of the hours per day, 90 percent of the hours per calendar quarter, and 95 percent of the hours per calendar year that the affected facility is operated and combusting solid waste (as that term is defined by the Administrator pursuant to Subtitle D of RCRA).

(r) For facilities using a continuous emissions monitoring system to demonstrate continuous compliance with the nitrogen oxides emission limit, compliance with the nitrogen oxides emission limit may be demonstrated by using the continuous emission monitoring system specified in § 60.2165 to measure nitrogen oxides and calculating a 24-hour daily arithmetic average emission concentration using EPA Reference Method 19, section 4.1. The nitrogen oxides continuous emission monitoring system must be operated according to performance specification 2 in appendix B of this part and must follow the procedures and methods specified in paragraphs (r)(1) through (r)(5) of this section.

(1) During each relative accuracy test run of the continuous emission monitoring system required by performance specification 2 of appendix B of this part, nitrogen oxides and oxygen (or carbon dioxide) data must be collected concurrently (or within a 30- to 60-minute period) by both the continuous emission monitors and the test methods specified in paragraphs (r)(1)(i) and (r)(1)(ii) of this section.

(i) For nitrogen oxides, EPA Reference Method 7, 7A, 7C, 7D, or 7E must be used.

(ii) For oxygen (or carbon dioxide), EPA Reference Method 3, 3A, or 3B, or as an alternative ANSI/ASME PTC–19.10–1981—Flue and Exhaust Gas Analysis [Part 10, Instruments and Apparatus] (incorporated by reference, see § 60.17], as applicable, must be used.

(2) The span value of the continuous emission monitoring system must be 125 percent of the maximum estimated hourly potential nitrogen oxide emissions of unit.

(3) Quarterly accuracy determinations and daily calibration drift tests must be performed in accordance with procedure 1 in appendix F of this part.

(4) When nitrogen oxides continuous emissions monitoring data are not obtained because of continuous emission monitoring system breakdowns, repairs, calibration checks and zero and span adjustments, emissions data must be obtained using other monitoring systems as approved by EPA or EPA Reference Method 19 to provide, as necessary, valid emissions data for a minimum of 85 percent of the hours per day, 90 percent of the hours per calendar quarter, and 95 percent of the hours per calendar year the unit is operated and combusting solid waste.

(5) The owner or operator of an affected facility may request that compliance with the nitrogen oxides emission limit be determined using carbon dioxide measurements corrected to an equivalent of 7 percent oxygen. If carbon dioxide is selected for use in diluent corrections, the relationship between oxygen and carbon dioxide levels must be established during the initial performance test according to the procedures and methods specified in paragraphs (r)(5)(i) through (r)(5)(iv) of this section. This relationship may be reestablished during performance compliance tests.

(i) The fuel factor equation in Method 3B must be used to determine the relationship between oxygen and carbon dioxide at a sampling location. Method 3, 3A, or 3B, or as an alternative ANSI/ASME PTC–19.10–1981—Flue and Exhaust Gas Analysis [Part 10, Instruments and Apparatus] (incorporated by reference, see § 60.17), as applicable, must be used to determine the oxygen concentration at the same location as the carbon dioxide monitor.

(ii) Samples must be taken for at least 30 minutes in each hour.

(iii) Each sample must represent a 1-hour average.

(iv) A minimum of 3 runs must be performed.

(s) For facilities using a continuous emissions monitoring system to demonstrate continuous compliance with any of the emission limits of this subpart, you must complete the following:

(1) Demonstrate compliance with the appropriate emission limit(s) using a 24-hour block average, calculated following the procedures in EPA Method 19 of appendix A–7 of this part.

(2) Operate all continuous emissions monitoring system in accordance with the applicable procedures under appendices B and F of this part.

(t) Use of the bypass stack at any time is an emissions standards deviation for particulate matter, HCl, Pb, Cd and Hg.

61. Section 60.2715 is revised to read as follows:

§ 60.2715 By what date must I conduct the annual performance test?

You must conduct annual performance tests within 12 months following the initial performance test. Conduct subsequent annual performance tests within 12 months following the previous one.

62. Section 60.2716 is added to read as follows:

§ 60.2716 By what date must I conduct the annual air pollution control device inspection?

On an annual basis (no more than 12 months following the previous annual air pollution control device inspection), you must complete the air pollution control device inspection as described in § 60.2706.

63. Section 60.2720 is revised to read as follows:

§ 60.2720 May I conduct performance testing less often?

(a) You can test less often for particulate matter, hydrogen chloride, fugitive ash, or opacity, provided:

(1) You have test data for at least 3 consecutive years.

(2) The test data results for particulate matter, hydrogen chloride, fugitive ash, or opacity is less than 75 percent of the emissions or opacity limit.

(3) There are no changes in the operation of the affected source or air pollution control equipment that could affect emissions. In this case, you do not have to conduct a performance test for that pollutant for the next 2 years. You must conduct a performance test during the third year and no more than 36 months following the previous performance test.

(b) If your CISWI unit continues to emit less than 75 percent of the emission limitation for particulate matter, hydrogen chloride, fugitive ash, or opacity and there are no changes in the operation of the affected facility or air pollution control equipment that could increase emissions, you may choose to conduct performance tests for these pollutants every third year, but each test must be within 36 months of the previous performance test.

(c) If a performance test shows emissions exceeded 75 percent or greater of the emission or opacity limitation for particulate matter, hydrogen chloride, fugitive ash, or opacity, you must conduct annual performance tests for that pollutant until all performance tests over a 3-year period are within 75 percent of the applicable emission limitation.

64. Section 60.2730 is amended by revising paragraph (c) and adding paragraphs (d) through (p) to read as follows:

§ 60.2730 What monitoring equipment must I install and what parameters must I monitor?

* * * * *

(c) If you are using something other than a wet scrubber, activated carbon, selective non-catalytic reduction, or an electrostatic precipitator to comply with the emission limitations under § 60.2670, you must install, calibrate (to the manufacturers' specifications), maintain and operate the equipment necessary to monitor compliance with the site-specific operating limits established using the procedures in § 60.2680.

(d) If you use activated carbon injection to comply with the emission limitations in this subpart, you must measure the minimum mercury sorbent flow rate once per hour.

(e) If you use selective noncatalytic reduction to comply with the emission limitations, you must complete the following:

(1) Following the date on which the initial performance test is completed or is required to be completed under § 60.2690, whichever date comes first, ensure that the affected facility does not operate above the maximum charge rate, or below the minimum secondary chamber temperature (if applicable to your CISWI unit) or the minimum reagent flow rate measured as 3-hour rolling averages (calculated each hour as the average of the previous 3 operating hours) at all times. Operating parameter limits are confirmed or reestablished during performance tests.

(2) Operation of the affected facility above the maximum charge rate, below the minimum secondary chamber temperature and below the minimum reagent flow rate simultaneously constitute a violation of the nitrogen oxides emissions limit.

(f) If you use an electrostatic precipitator to comply with the emission limits of this subpart, you must monitor the voltage and amperage of the electrostatic precipitator collection plates and maintain the 3-hour block averages at or above the operating limits established during the mercury or particulate matter performance test.

(g) To demonstrate continuous compliance with the hydrogen chloride emissions limit, a facility may substitute use of a hydrogen chloride continuous emissions monitoring system for conducting the hydrogen chloride annual performance test, monitoring the minimum hydrogen chloride sorbent flow rate and monitoring the minimum scrubber liquor pH.

(h) To demonstrate continuous compliance with the particulate matter emissions limit, a facility may substitute use of a particulate matter continuous emissions monitoring system for conducting the particulate matter annual performance test and monitoring the minimum pressure drop across the wet scrubber, if applicable.

(i) To demonstrate continuous compliance with the dioxin/furan emissions limit, a facility may substitute use of a continuous automated sampling system for the dioxin/furan annual performance test. You must record the output of the system and analyze the sample according to EPA Method 23 of appendix A–7 of this part. This option to use a continuous automated sampling system takes effect on the date a final performance specification applicable to dioxin/furan from continuous monitors is published in the **Federal Register.** The owner or operator who elects to continuously sample dioxin/furan emissions instead of sampling and testing using EPA Method 23 of appendix A–7 must install, calibrate, maintain and operate a continuous automated sampling system and must comply with the requirements specified in § 60.58b(p) and (q).

(j) To demonstrate continuous compliance with the mercury emissions limit, a facility may substitute use of a continuous automated sampling system for the mercury annual performance test. You must record the output of the system and analyze the sample at set intervals using any suitable determinative technique that can meet appropriate performance criteria. This option to use a continuous automated sampling system takes effect on the date a final performance specification applicable to mercury from monitors is published in the **Federal Register.** The owner or operator who elects to continuously sample mercury emissions instead of sampling and testing using EPA Method 29 of appendix A–8 of this part, ASTM D6784–02 (2008), Standard Test Method for Elemental, Oxidized, Particle Bound and Total Mercury in Flue Gas Generated from Coal-Fired Stationary Sources (Ontario Hydro Method), or an approved alternative method for measuring mercury emissions, must install, calibrate, maintain and operate a continuous automated sampling system and must comply with the requirements specified in § 60.58b(p) and (q).

(k) To demonstrate continuous compliance with the nitrogen oxides emissions limit, a facility may substitute use of a continuous emissions monitoring system for the nitrogen oxides annual performance test to demonstrate compliance with the nitrogen oxides emissions limits.

(1) Install, calibrate, maintain and operate a continuous emission monitoring system for measuring nitrogen oxides emissions discharged to the atmosphere and record the output of the system. The requirements under performance specification 2 of appendix

B of this part, the quality assurance procedure 1 of appendix F of this part and the procedures under § 60.13 must be followed for installation, evaluation and operation of the continuous emission monitoring system.

(2) Following the date that the initial performance test for nitrogen oxides is completed or is required to be completed under § 60.2690, compliance with the emission limit for nitrogen oxides required under § 60.52b(d) must be determined based on the 24-hour daily arithmetic average of the hourly emission concentrations using continuous emission monitoring system outlet data. The 1-hour arithmetic averages must be expressed in parts per million by volume (dry basis) and used to calculate the 24-hour daily arithmetic average concentrations. The 1-hour arithmetic averages must be calculated using the data points required under § 60.13(e)(2).

(1) To demonstrate continuous compliance with the sulfur dioxide emissions limit, a facility may substitute use of a continuous automated sampling system for the sulfur dioxide annual performance test to demonstrate compliance with the sulfur dioxide emissions limits.

(1) Install, calibrate, maintain and operate a continuous emission monitoring system for measuring sulfur dioxide emissions discharged to the atmosphere and record the output of the system. Requirements under performance specification 2 of appendix B of this part, the quality assurance requirements of procedure 1 of appendix F of this part and the procedures under § 60.13 must be followed for installation, evaluation and operation of the continuous emission monitoring system.

(2) Following the date that the initial performance test for sulfur dioxide is completed or is required to be completed under § 60.2690, compliance with the sulfur dioxide emission limit may be determined based on the 24-hour daily geometric average of the hourly arithmetic average emission concentrations using continuous emission monitoring system outlet data. The 1-hour arithmetic averages must be expressed in parts per million corrected to 7 percent oxygen (dry basis) and used to calculate the 24-hour daily geometric average emission concentrations and daily geometric average emission percent reductions. The 1-hour arithmetic averages must be calculated using the data points required under § 60.13(e)(2).

(m) For energy recovery units that do not use a wet scrubber, you must install, operate, certify and maintain a continuous opacity monitoring system according to the procedures in paragraphs (m)(1) through (5) of this section by the compliance date specified in § 60.2670. Energy recovery units that use a particulate matter continuous emissions monitoring system to demonstrate initial and continuing compliance according to the procedures in § 60.2730(n) are not required to install a continuous opacity monitoring system and must perform the annual performance tests for opacity consistent with § 60.2710(e).

(1) Install, operate and maintain each continuous opacity monitoring system according to performance specification 1 of 40 CFR part 60, appendix B.

(2) Conduct a performance evaluation of each continuous opacity monitoring system according to the requirements in § 60.13 and according to PS–1 of 40 CFR part 60, appendix B.

(3) As specified in § 60.13(e)(1), each continuous opacity monitoring system must complete a minimum of one cycle of sampling and analyzing for each successive 10-second period and one cycle of data recording for each successive 6-minute period.

(4) Reduce the continuous opacity monitoring system data as specified in § 60.13(h)(1).

(5) Determine and record all the 6-minute averages (and 1-hour block averages as applicable) collected.

(n) For energy recovery units with design capacities greater than 250 MMBtu/hr, in place of particulate matter testing with EPA Method 5, an owner or operator must install, calibrate, maintain and operate a continuous emission monitoring system for monitoring particulate matter emissions discharged to the atmosphere and record the output of the system. The owner or operator of an affected facility who continuously monitors particulate matter emissions instead of conducting performance testing using EPA Method 5 must install, calibrate, maintain and operate a continuous emission monitoring system and must comply with the requirements specified in paragraphs (n)(1) through (n)(14) of this section.

(1) Notify the Administrator 1 month before starting use of the system.

(2) Notify the Administrator 1 month before stopping use of the system.

(3) The monitor must be installed, evaluated and operated in accordance with the requirements of performance specification 11 of appendix B of this part and quality assurance requirements of procedure 2 of appendix F of this part and § 60.13.

(4) The initial performance evaluation must be completed no later than 180 days after the final compliance date for meeting the amended emission limitations, as specified under § 60.2690 or within 180 days of notification to the Administrator of use of the continuous monitoring system if the owner or operator was previously determining compliance by Method 5 performance tests, whichever is later.

(5) The owner or operator of an affected facility may request that compliance with the particulate matter emission limit be determined using carbon dioxide measurements corrected to an equivalent of 7 percent oxygen. The relationship between oxygen and carbon dioxide levels for the affected facility must be established according to the procedures and methods specified in § 60.2710(r)(5)(i) through (r)(5)(iv).

(6) The owner or operator of an affected facility must conduct an initial performance test for particulate matter emissions as required under § 60.2690. Compliance with the particulate matter emission limit must be determined by using the continuous emission monitoring system specified in paragraph (n) of this section to measure particulate matter and calculating a 24-hour block arithmetic average emission concentration using EPA Reference Method 19, section 4.1.

(7) Compliance with the particulate matter emission limit must be determined based on the 24-hour daily (block) average of the hourly arithmetic average emission concentrations using continuous emission monitoring system outlet data.

(8) At a minimum, valid continuous monitoring system hourly averages must be obtained as specified in§ 60.2735(e).

(9) The 1-hour arithmetic averages required under paragraph (n)(7) of this section must be expressed in milligrams per dry standard cubic meter corrected to 7 percent oxygen (or carbon dioxide) (dry basis) and must be used to calculate the 24-hour daily arithmetic average emission concentrations. The 1-hour arithmetic averages must be calculated using the data points required under § 60.13(e)(2).

(10) All valid continuous emission monitoring system data must be used in calculating average emission concentrations even if the minimum continuous emission monitoring system data requirements of paragraph (n)(8) of this section are not met.

(11) The continuous emission monitoring system must be operated according to performance specification 11 in appendix B of this part.

(12) During each relative accuracy test run of the continuous emission monitoring system required by performance specification 11 in

appendix B of this part, particulate matter and oxygen (or carbon dioxide) data must be collected concurrently (or within a 30- to 60-minute period) by both the continuous emission monitors and the following test methods:

(i) For particulate matter, EPA Reference Method 5 must be used.

(ii) For oxygen (or carbon dioxide), EPA Reference Method 3, 3A, or 3B, as applicable must be used.

(13) Quarterly accuracy determinations and daily calibration drift tests must be performed in accordance with procedure 2 in appendix F of this part.

(14) When particulate matter emissions data are not obtained because of continuous emission monitoring system breakdowns, repairs, calibration checks and zero and span adjustments, emissions data must be obtained by using other monitoring systems as approved by the Administrator or EPA Reference Method 19 to provide, as necessary, valid emissions data for a minimum of 85 percent of the hours per day, 90 percent of the hours per calendar quarter, and 95 percent of the hours per calendar year that the affected facility is operated and combusting waste.

(o) For energy recovery units, you must install, operate, certify and maintain a continuous emissions monitoring system for carbon monoxide, according to the requirements of performance specification 4B of appendix B of this part and quality assurance procedure 1 of appendix F of this part.

(p) The owner/operator of an affected source with a bypass stack shall install, calibrate (to manufacturers' specifications), maintain and operate a device or method for measuring the use of the bypass stack including date, time and duration.

65. Section 60.2735 is revised to read as follows:

§ 60.2735 Is there a minimum amount of monitoring data I must obtain?

(a) You must conduct all monitoring at all times the CISWI unit is operating.

(b) You must use all the data collected during all periods in assessing compliance with the operating limits.

(c) For continuous emission monitoring systems for measuring sulfur dioxide emissions, valid continuous monitoring system hourly averages must be obtained as specified in paragraphs (c)(1) and (c)(2) of this section for a minimum of 85 percent of the hours per day, 90 percent of the hours per calendar quarter, and 95 percent of the hours per calendar year that the affected facility is combusting waste. All valid continuous emission monitoring system data must be used in calculating average emission concentrations and percent reductions even if the minimum continuous emission monitoring system data requirements of this paragraph (c) are not met.

(1) At least 2 data points per hour must be used to calculate each 1-hour arithmetic average.

(2) Each sulfur dioxide 1-hour arithmetic average must be corrected to 7 percent oxygen on an hourly basis using the 1-hour arithmetic average of the oxygen (or carbon dioxide) continuous emission monitoring system data.

(d) For continuous emission monitoring systems for measuring nitrogen oxides emissions, valid continuous emission monitoring system hourly averages must be obtained as specified in paragraphs (d)(1) and (d)(2) of this section for a minimum of 85 percent of the hours per day, 90 percent of the hours per calendar quarter, and 95 percent of the hours per calendar year that the affected facility is combusting waste. All valid continuous emission monitoring system data must be used in calculating average emission concentrations and percent reductions even if the minimum continuous emission monitoring system data requirements of this paragraph (d) are not met.

(1) At least 2 data points per hour must be used to calculate each 1-hour arithmetic average.

(2) Each nitrogen oxides 1-hour arithmetic average must be corrected to 7 percent oxygen on an hourly basis using the 1-hour arithmetic average of the oxygen (or carbon dioxide) continuous emission monitoring system data.

(e) For continuous emission monitoring systems for measuring particulate matter emissions, valid continuous monitoring system hourly averages must be obtained as specified in paragraphs (e)(1) and (e)(2) for a minimum of 85 percent of the hours per day, 90 percent of the hours per calendar quarter, and 95 percent of the hours per calendar year that the affected source is combusting waste. All valid continuous emission monitoring system data must be used in calculating average emission concentrations and percent reductions even if the minimum continuous emission monitoring system data requirements of this paragraph (c) are not met.

(1) At least 2 data points per hour must be used to calculate each one-hour arithmetic average.

(2) Each particulate matter one-hour arithmetic average must be corrected to 7 percent oxygen on an hourly basis using the one-hour arithmetic average of the oxygen (or carbon dioxide) continuous emission monitoring system data.

66. Section 60.2740 is amended by:

a. Revising the introductory text.

b. Revising paragraphs (b)(5) and (e).

c. Removing and reserving paragraphs (c) and (d).

d. Adding paragraphs (n) through (t).

§ 60.2740 What records must I keep?

You must maintain the items (as applicable) as specified in paragraphs (a), (b), and (e) through (t) of this section for a period of at least 5 years:

* * * * *

(b) * * *

(5) For affected CISWI units that establish operating limits for controls other than wet scrubbers under § 60.2675(d) through (f) or § 60.2680, you must maintain data collected for all operating parameters used to determine compliance with the operating limits.

* * * * *

(c) [Reserved]

(d) [Reserved]

(e) Identification of calendar dates and times for which data show a deviation from the operating limits in table 3 of this subpart or a deviation from other operating limits established under § 60.2675(d) through (f) or § 60.2680 with a description of the deviations, reasons for such deviations, and a description of corrective actions taken.

* * * * *

(n) Maintain records of the annual air pollution control device inspections that are required for each CISWI unit subject to the emissions limits in table 2 of this subpart or tables 6 through 10 of this subpart, any required maintenance and any repairs not completed within 10 days of an inspection or the timeframe established by the state regulatory agency.

(o) For continuously monitored pollutants or parameters, you must document and keep a record of the following parameters measured using continuous monitoring systems.

(1) All 6-minute average levels of opacity.

(2) All 1-hour average concentrations of sulfur dioxide emissions.

(3) All 1-hour average concentrations of nitrogen oxides emissions.

(4) All 1-hour average concentrations of carbon monoxide emissions.

(5) All one-hour average concentrations of particulate matter emissions.

(6) All one-hour average concentrations of mercury emissions.

(7) All one-hour average concentrations of hydrogen chloride emissions.

(p) Records indicating use of the bypass stack, including dates, times and durations.

(q) If you choose to stack test less frequently than annually, consistent with § 60.2720(a) through (c), you must keep annual records that document that your emissions in the previous stack test(s) were less than 75 percent of the applicable emission limit and document that there was no change in source operations including fuel composition and operation of air pollution control equipment that would cause emissions of the relevant pollutant to increase within the past year.

(r) Records of the occurrence and duration of each malfunction of operation (*i.e.,* process equipment) or the air pollution control and monitoring equipment.

(s) Records of all required maintenance performed on the air pollution control and monitoring equipment.

(t) Records of actions taken during periods of malfunction to minimize emissions in accordance with § 60.11(d), including corrective actions to restore malfunctioning process and air pollution control and monitoring equipment to its normal or usual manner of operation.

67. Section 60.2770 is amended by revising paragraph (e) and adding paragraphs (k) through (o) to read as follows:

§ 60.2770 What information must I include in my annual report?

* * * * *

(e) If no deviation from any emission limitation or operating limit that applies to you has been reported, a statement that there was no deviation from the emission limitations or operating limits during the reporting period.

* * * * *

(k) If you had a malfunction during the reporting period, the compliance report must include the number, duration, and a brief description for each type of malfunction that occurred during the reporting period and that caused or may have caused any applicable emission limitation to be exceeded. The report must also include a description of actions taken by an owner or operator during a malfunction of an affected source to minimize emissions in accordance with § 60.11(d), including actions taken to correct a malfunction.

(l) For each deviation from an emission or operating limitation that occurs for a CISWI unit for which you are not using a CMS to comply with the emission or operating limitations in this subpart, the annual report must contain the following information.

(1) The total operating time of the CISWI unit at which the deviation occurred during the reporting period.

(2) Information on the number, duration, and cause of deviations (including unknown cause, if applicable), as applicable, and the corrective action taken.

(m) If there were periods during which the continuous monitoring system, including the continuous emission monitoring system, was out of control as specified in paragraph (o) of this section, the annual report must contain the following information for each deviation from an emission or operating limitation occurring for a CISWI unit for which you are using a continuous monitoring system to comply with the emission and operating limitations in this subpart.

(1) The date and time that each malfunction started and stopped.

(2) The date, time, and duration that each CMS was inoperative, except for zero (low-level) and high-level checks.

(3) The date, time, and duration that each continuous monitoring system was out-of-control, including start and end dates and hours and descriptions of corrective actions taken.

(4) The date and time that each deviation started and stopped, and whether each deviation occurred during a period of malfunction or during another period.

(5) A summary of the total duration of the deviation during the reporting period, and the total duration as a percent of the total source operating time during that reporting period.

(6) A breakdown of the total duration of the deviations during the reporting period into those that are due to control equipment problems, process problems, other known causes, and other unknown causes.

(7) A summary of the total duration of continuous monitoring system downtime during the reporting period, and the total duration of continuous monitoring system downtime as a percent of the total operating time of the CISWI unit at which the continuous monitoring system downtime occurred during that reporting period.

(8) An identification of each parameter and pollutant that was monitored at the CISWI unit.

(9) A brief description of the CISWI unit.

(10) A brief description of the continuous monitoring system.

(11) The date of the latest continuous monitoring system certification or audit.

(12) A description of any changes in continuous monitoring system, processes, or controls since the last reporting period.

(n) If there were periods during which the continuous monitoring system, including the continuous emission monitoring system, was not out of control as specified in paragraph (o) of this section, a statement that there were not periods during which the continuous monitoring system was out of control during the reporting period.

(o) A continuous monitoring system is out of control if any of the following occur.

(1) The zero (low-level), mid-level (if applicable), or high-level calibration drift exceeds two times the applicable calibration drift specification in the applicable performance specification or in the relevant standard.

(2) The continuous monitoring system fails a performance test audit (*e.g.,* cylinder gas audit), relative accuracy audit, relative accuracy test audit, or linearity test audit.

(3) The continuous opacity monitoring system calibration drift exceeds two times the limit in the applicable performance specification in the relevant standard.

68. Section 60.2780 is amended by revising paragraph (c) and removing paragraphs (e) and (f).

§ 60.2780 What must I include in the deviation report?

* * * * *

(c) Durations and causes of the following:

(1) Each deviation from emission limitations or operating limits and your corrective actions.

(2) Bypass events and your corrective actions.

* * * * *

69. Section 60.2795 is revised to read as follows:

§ 60.2795 In what form can I submit my reports?

(a) Submit initial, annual and deviation reports electronically or in paper format, postmarked on or before the submittal due dates.

(b) After December 31, 2011, within 60 days after the date of completing each performance evaluation conducted to demonstrate compliance with this subpart, the owner or operator of the affected facility must submit the test data to EPA by entering the data electronically into EPA's WebFIRE database through EPA's Central Data Exchange. The owner or operator of an affected source shall enter the test data into EPA's database using the Electronic Reporting Tool or other compatible

electronic spreadsheet. Only performance evaluation data collected using methods compatible with ERT are subject to this requirement to be submitted electronically into EPA's WebFIRE database.

70. Section 60.2805 is revised to read as follows:

§ 60.2805 Am I required to apply for and obtain a Title V operating permit for my unit?

Yes. Each CISWI unit and air curtain incinerator affected by this subpart must operate pursuant to a permit issued under Section 129(e) and title V of the Clean Air Act.

71. Section 60.2860 is revised to read as follows:

§ 60.2860 What are the emission limitations for air curtain incinerators?

After the date the initial stack test is required or completed (whichever is earlier), you must meet the limitations in paragraphs (a) and (b) of this section.

(a) Maintain opacity to less than or equal to 10 percent opacity (as determined by the average of three 1-hour blocks consisting of ten 6-minute average opacity values), except as described in paragraph (b) of this section.

(b) Maintain opacity to less than or equal to 35 percent opacity (as determined by the average of three 1-hour blocks consisting of ten 6-minute average opacity values) during the startup period that is within the first 30 minutes of operation.

72. Section 60.2870 is amended by revising paragraphs (c)(1) and (2) to read as follows:

§ 60.2870 What are the recordkeeping and reporting requirements for air curtain incinerators?

* * * * *

(c) * * *

(1) The types of materials you plan to combust in your air curtain incinerator.

(2) The results (as determined by the average of three 1-hour blocks consisting of ten 6-minute average opacity values) of the initial opacity tests.

* * * * *

73. Section 60.2875 is amended by:

a. Adding definitions for "Burn-off oven", "Bypass stack", "Energy recovery unit", "Incinerator", "Kiln", "Minimum voltage or amperage", "Opacity", "Raw mill", "Small remote incinerator", "Solid waste incineration unit" and "Waste-burning kiln", in alphabetical order.

b. Revising the definitions for "Commercial and industrial solid waste incineration (CISWI) unit" and "Deviation".

c. Removing the definitions for "Agricultural waste", "Commercial or industrial waste", "Malfunction" and "Solid Waste".

§ 60.2875 What definitions must I know?

* * * * *

Burn-off oven means any rack reclamation unit, part reclamation unit, or drum reclamation unit.

Bypass stack means a device used for discharging combustion gases to avoid severe damage to the air pollution control device or other equipment.

* * * * *

Commercial and industrial solid waste incineration (CISWI) unit means any distinct operating unit of any commercial or industrial facility that combusts any solid waste as that term is defined in 40 CFR part 241. While not all CISWI units will include all of the following components, a CISWI unit includes, but is not limited to, the solid waste feed system, grate system, flue gas system, waste heat recovery equipment, if any, and bottom ash system. The CISWI unit does not include air pollution control equipment or the stack. The CISWI unit boundary starts at the solid waste hopper (if applicable) and extends through two areas: The combustion unit flue gas system, which ends immediately after the last combustion chamber or after the waste heat recovery equipment, if any; and the combustion unit bottom ash system, which ends at the truck loading station or similar equipment that transfers the ash to final disposal. The CISWI unit includes all ash handling systems connected to the bottom ash handling system.

* * * * *

Deviation means any instance in which an affected source subject to this subpart, or an owner or operator of such a source:

(1) Fails to meet any requirement or obligation established by this subpart, including but not limited to any emission limitation, operating limit, or operator qualification and accessibility requirements.

(2) Fails to meet any term or condition that is adopted to implement an applicable requirement in this subpart and that is included in the operating permit for any affected source required to obtain such a permit.

* * * * *

Energy recovery unit means a combustion unit combusting solid waste (as that term is defined by the Administrator pursuant to Subtitle D of RCRA) for energy recovery. Energy recovery units include units that would be considered boilers and process heaters if they did not combust solid waste.

* * * * *

Incinerator means any furnace used in the process of combusting solid waste (as the term is defined by the Administrator pursuant to Subtitle D of RCRA) for the purpose of reducing the volume of the waste by removing combustible matter. Incinerator designs include single chamber, two-chamber and cyclonic burn barrels.

* * * * *

Kiln means an oven or furnace, including any associated preheater or precalciner devices, used for processing a substance by burning, firing or drying. Kilns include cement kilns, that produce clinker by heating limestone and other materials for subsequent production of Portland cement and lime kilns, that produce quicklime by calcination of limestone.

* * * * *

Minimum voltage or amperage means 90 percent of the lowest test-run average voltage or amperage to the electrostatic precipitator measured from the pressure drop and liquid flow rate monitors during the most recent particulate matter or mercury performance test demonstrating compliance with the applicable emission limits.

* * * * *

Opacity means the degree to which emissions reduce the transmission of light and obscure the view of an object in the background.

* * * * *

Raw mill means a ball and tube mill, vertical roller mill or other size reduction equipment, that is not part of an in-line kiln/raw mill, used to grind feed to the appropriate size. Moisture may be added or removed from the feed during the grinding operation. If the raw mill is used to remove moisture from feed materials, it is also, by definition, a raw material dryer. The raw mill also includes the air separator associated with the raw mill.

* * * * *

Small, remote incinerator means an incinerator that combusts solid waste (as that term is defined by the Administrator pursuant to Subtitle D of RCRA) and has the capacity to combust 1 ton per day or less solid waste and is more than 50 miles driving distance to the nearest municipal solid waste landfill.

Solid waste incineration unit means a distinct operating unit of any facility which combusts any solid waste material from commercial or industrial establishments or the general public (including single and multiple

residences, hotels and motels). Such term does not include incinerators or other units required to have a permit under section 3005 of the Solid Waste Disposal Act. The term "solid waste incineration unit" does not include (A) materials recovery facilities (including primary or secondary smelters) which combust waste for the primary purpose of recovering metals, (B) qualifying small power production facilities, as defined in section 3(17)(C) of the Federal Power Act (16 U.S.C. 769(17)(C)), or qualifying cogeneration facilities, as defined in section 3(18)(B) of the Federal Power Act (16 U.S.C. 796(18)(B)), which burn homogeneous waste (such as units which burn tires or used oil, but not including refuse-derived fuel) for the production of electric energy or in the case of qualifying cogeneration facilities which burn homogeneous waste for the production of electric energy and steam or forms of useful energy (such as heat) which are used for industrial, commercial, heating or cooling purposes, or (C) air curtain incinerators provided that such incinerators only burn wood wastes, yard wastes and clean lumber and that such air curtain incinerators comply with opacity limitations to be established by the Administrator by rule.

* * * * *

Waste-burning kiln means a kiln that is heated, in whole or in part, by combusting solid waste (as that term is defined by the Administrator pursuant to Subtitle D of RCRA).

* * * * *

74. Table 1 to Subpart DDDD of Part 60 is revised to read as follows:

TABLE 1 TO SUBPART DDDD OF PART 60—MODEL RULE—INCREMENTS OF PROGRESS AND COMPLIANCE SCHEDULES

Comply with these increments of progress	By these dates[a]
Increment 1—Submit final control plan	(Dates to be specified in state plan).
Increment 2—Final compliance	(Dates to be specified in state plan)[b].

[a] Site-specific schedules can be used at the discretion of the state.

[b] The date can be no later than 3 years after the effective date of state plan approval or December 1, 2005 for CISWI units that commenced construction on or before November 30, 1999. The date can be no later than 3 years after the effective date of approval of a revised State plan or [THE DATE 5 YEARS AFTER PUBLICATION OF THE FINAL RULE IN THE FEDERAL REGISTER] for CISWI units that commenced construction on or before June 4, 2010.

75. Table 2 to subpart DDDD is amended by revising the heading and adding footnote b to read as follows:

Table 2 to Subpart DDDD of Part 60—Model Rule—Emission Limitations That Apply Before. [Date to be specified in state plan] [b]

* * * * *

[b] The date specified in the state plan can be no later than 3 years after the effective date of approval of a revised state plan or [THE DATE 5 YEARS AFTER PUBLICATION OF THE FINAL RULE IN THE FEDERAL REGISTER].

76. Table 5 of subpart DDDD is amended by:

a. Revising the entry for "Annual Report".

b. Revising the entry for "Emission limitation or operating limit deviation report".

TABLE 5 TO SUBPART DDDD OF PART 60—SUMMARY OF REPORTING REQUIREMENTS[A]

Report	Due date	Contents	Reference
*	*	*	*
Annual report	No later than 12 months following the submission of the initial test report. Subsequent reports are to be submitted no more than 12 months following the previous report.	• Name and address • Statement and signature by responsible official. • Date of report • Values for the operating limits • Highest recorded 3-hour average and the lowest 3-hour average, as applicable, for each operating parameter recorded for the calendar year being reported. • If a performance test was conducted during the reporting period, the results of the test. • If a performance test was not conducted during the reporting period, a statement that the requirements of § 60.2720(a) or (b) were met. • Documentation of periods when all qualified CISWI unit operators were unavailable for more than 8 hours but less than 2 weeks.	§§ 60.2765 and 60.2770.
*	*	*	*
Emission limitation or operating limit deviation report.	By August 1 of that year for data collected during the first half of the calendar year. By February 1 of the following year for data collected during the second half of the calendar year.	• Dates and times of deviation • Averaged and recorded data for those dates. • Duration and causes of each deviation and the corrective actions taken. • Copy of operating limit monitoring data and any test reports.	§ 60.2775 and 60.2780

TABLE 5 TO SUBPART DDDD OF PART 60—SUMMARY OF REPORTING REQUIREMENTS[A]—Continued

Report	Due date	Contents	Reference
		• Dates, times and causes for monitor downtime incidents.	
* * *	*	* * *	*

[a] This table is only a summary, see the referenced sections of the rule for the complete requirements.

77. Table 6 to Subpart DDDD is added as follows:

TABLE 6 TO SUBPART DDDD OF PART 60-MODEL RULE-EMISSION LIMITATIONS THAT APPLY TO INCINERATORS ON AND AFTER [DATE TO BE SPECIFIED IN STATE PLAN] [a]

For the air pollutant	You must meet this emission limitation [b]	Using this averaging time	And determining compliance using this method
Cadmium	0.0013 milligrams per dry standard cubic meter.	3-run average (collect a minimum volume of 2 dry standard cubic meters).	Performance test (Method 29 of appendix A–8 of this part). Use ICPMS for the analytical finish.
Carbon monoxide	2.2 parts per million dry volume.	3-run average (1 hour minimum sample time per run).	Performance test (Method 10 of appendix A–4 of this part). Use a maximum allowable drift of 0.2 ppm and a span gas with a CO concentration of 10 ppm or less. The span gas must contain approximately the same concentration of CO_2 expected from the source.
Dioxins/furans (total mass basis).	0.031 nanograms per dry standard cubic meter.	3-run average (collect a minimum volume of 2 dry standard cubic meters).	Performance test (Method 23 of appendix A–7 of this part).
Dioxins/furans (toxic equivalency basis).	0.0025 nanograms per dry standard cubic meter.	3-run average (collect a minimum volume of 2 dry standard cubic meters).	Performance test (Method 23 of appendix A–7 of this part).
Hydrogen chloride	29 parts per million dry volume.	3-run average (collect a minimum volume of 1 dry standard cubic meter).	Performance test (Method 26A of appendix A–8 of this part).
Lead	0.0026 milligrams per dry standard cubic meter.	3-run average (collect a minimum volume of 2 dry standard cubic meters).	Performance test (Method 29 of appendix A–8 of this part). Use ICPMS for the analytical finish.
Mercury	0.0028 milligrams per dry standard cubic meter.	3-run average (collect a minimum volume of 1 dry standard cubic meter).	Performance test (Method 29 or 30B of appendix A–8 of this part).
Opacity	1%	Three 1-hour blocks consisting of ten 6-minute average opacity values.	Performance test (Method 9 of appendix A–4 of this part).
Oxides of nitrogen	34 parts per million dry volume.	3-run average (1 hour minimum sample time per run).	Performance test (Method 7E of appendix A–4 of this part).
Particulate matter filterable	13 milligrams per dry standard cubic meter.	3-run average (collect a minimum volume of 1 dry standard cubic meter).	Performance test (Method 5 or 29 of appendix A–3 or appendix A–8 of this part).
Sulfur dioxide	2.5 parts per million dry volume.	3-run average (1 hour minimum sample time per run).	Performance test (Method 6 or 6c of appendix A–4 of this part. Use a maximum allowable drift of 0.2 ppm and a span gas with concentration of 5 ppm or less.
Fugitive ash	Visible emissions for no more than 5% of the hourly observation period.	Three 1-hour observation periods.	Visible emission test (Method 22 of appendix A–7 of this part).

[a] The date specified in the state plan can be no later than 3 years after the effective date of approval of a revised state plan or [THE DATE 5 YEARS AFTER PUBLICATION OF THE FINAL RULE IN THE FEDERAL REGISTER].
[b] All emission limitations (except for opacity) are measured at 7% oxygen, dry basis at standard conditions.

78. Table 7 to Subpart DDDD is added as follows:

TABLE 7 TO SUBPART DDDD OF PART 60—MODEL RULE—EMISSION LIMITATIONS THAT APPLY TO ENERGY RECOVERY UNITS AFTER [DATE OF PUBLICATION OF THE FINAL RULE IN THE FEDERAL REGISTER]

For the air pollutant	You must meet this emission limitation [a]	Using this averaging time	And determining compliance using this method
Cadmium	0.00041 milligrams per dry standard cubic meter.	3-run average (collect a minimum volume of 2 dry standard cubic meters).	Performance test (Method 29 of appendix A–8 of this part). Use ICPMS for the analytical finish.
Carbon monoxide	150 parts per million dry volume.	3-run average (1 hour minimum sample time per run).	Performance test (Method 10 of appendix A–4 of this part).
Dioxins/furans (total mass basis).	0.75 nanograms per dry standard cubic meter.	3-run average (collect a minimum volume of 1 dry standard cubic meter).	Performance test (Method 23 of appendix A–7 of this part).
Dioxins/furans (toxic equivalency basis).	0.059 nanograms per dry standard cubic meter.	3-run average (collect a minimum volume of 1 dry standard cubic meter).	Performance test (Method 23 of appendix A–7 of this part).
Hydrogen chloride	1.5 parts per million dry volume.	3-run average (collect a minimum volume of 1 dry standard cubic meter).	Performance test (Method 26A of appendix A–8 of this part).
Lead	0.002 milligrams per dry standard cubic meter.	3-run average (collect a minimum volume of 2 dry standard cubic meters).	Performance test (Method 29 of appendix A–8 of this part). Use ICPMS for the analytical finish.
Mercury	0.00096 milligrams per dry standard cubic meter.	3-run average (collect a minimum volume of 2 dry standard cubic meters).	Performance test (Method 29 of appendix A of this part).
Opacity	1%	6-minute averages; 1-hour block average for units that operate dry control systems.	Continuous opacity monitoring (performance specification 1 of appendix B of this part), unless equipped with a wet scrubber.
Oxides of nitrogen	130 parts per million dry volume.	3-run average (1 hour minimum sample time per run).	Performance test (Method 7E of appendix A–4 of this part).
Particulate matter filterable	9.2 milligrams per dry standard cubic meter.	3-run average (collect a minimum volume of 1 dry standard cubic meter).	Performance test (Method 5 or 29 of appendix A–3 or appendix A–8 of this part) if the unit has a design capacity less than or equal to 250 MMBtu/hr; or PM CEMS (performance specification 11 of appendix B of this part) if the unit has a design capacity greater than 250 MMBtu/hr.
Sulfur dioxide	4.1 parts per million dry volume.	3-run average (1 hour minimum sample time per run).	Performance test (Method 6 or 6c of appendix A–4 of this part. Use a span gas with a concentration of 20 ppm or less.
Fugitive ash	Visible emissions for no more than 5% of the hourly observation period.	Three 1-hour observation periods.	Visible emission test (Method 22 of appendix A–7 of this part).

[a] All emission limitations (except for opacity) are measured at 7% oxygen, dry basis at standard conditions.

79. Table 8 to Subpart DDDD is added as follows:

TABLE 8 TO SUBPART DDDD OF PART 60—MODEL RULE—EMISSION LIMITATIONS THAT APPLY TO WASTE-BURNING KILNS AFTER [DATE OF PUBLICATION OF THE FINAL RULE IN THE FEDERAL REGISTER]

For the air pollutant	You must meet this emission limitation [a]	Using this averaging time	And determining compliance using this method
Cadmium	0.0003 milligrams per dry standard cubic meter.	3-run average (collect a minimum volume of 2 dry standard cubic meters).	Performance test (Method 29 of appendix A–8 of this part).
Carbon monoxide	710 parts per million dry volume.	3-run average (1 hour minimum sample time per run).	Performance test (Method 10 of appendix A–4 of this part).
Dioxins/furans (total mass basis).	2.1 nanograms per dry standard cubic meter.	3-run average (collect a minimum volume of 1 dry standard cubic meter).	Performance test (Method 23 of appendix A–7 of this part).
Dioxins/furans (toxic equivalency basis).	0.17 nanograms per dry standard cubic meter.	3-run average (collect a minimum volume of 1 dry standard cubic meter).	Performance test (Method 23 of appendix A–7 of this part).
Hydrogen chloride	1.5 parts per million dry volume.	3-run average (collect a minimum volume of 1 dry standard cubic meter).	Performance test (Method 26A of appendix A–8 of this part).
Lead	0.0027 milligrams per dry standard cubic meter.	3-run average (collect a minimum volume of 2 dry standard cubic meters).	Performance test (Method 29 of appendix A–8 of this part).

TABLE 8 TO SUBPART DDDD OF PART 60—MODEL RULE—EMISSION LIMITATIONS THAT APPLY TO WASTE-BURNING KILNS AFTER [DATE OF PUBLICATION OF THE FINAL RULE IN THE FEDERAL REGISTER]—Continued

For the air pollutant	You must meet this emission limitation [a]	Using this averaging time	And determining compliance using this method
Mercury	0.024 milligrams per dry standard cubic meter.	3-run average (collect a minimum volume of 1 dry standard cubic meter).	Mercury CEMS (performance specification 12A of appendix B of this part or mercury sorbent trap method specified in appendix K of part 75)
Opacity	4%	Three 1-hour blocks consisting of ten 6-minute average opacity values.	Performance test (Method 9 of appendix A–4 of this part).
Oxides of nitrogen	1100 parts per million dry volume.	3-run average (1 hour minimum sample time per run).	Performance test (Method 7E of appendix A–4 of this part).
Particulate matter filterable	60 milligrams per dry standard cubic meter.	3-run average (collect a minimum volume of 1 dry standard cubic meter).	Performance test (Method 5 or 29 of appendix A–3 of this part).
Sulfur dioxide	410 parts per million dry volume.	3-run average (1 hour minimum sample time per run).	Performance test (Method 6 or 6c of appendix A–4 of this part.
Fugitive ash	Visible emissions for no more than 5% of the hourly observation period.	Three 1-hour observation periods.	Visible emission test (Method 22 of appendix A–7 of this part).

[a] All emission limitations (except for opacity) are measured at 7% oxygen, dry basis at standard conditions.

80. Table 9 to Subpart DDDD is added as follows:

TABLE 9 TO SUBPART DDDD OF PART 60—MODEL RULE—EMISSION LIMITATIONS THAT APPLY TO BURN-OFF OVENS AFTER [DATE OF PUBLICATION OF THE FINAL RULE IN THE FEDERAL REGISTER]

For the air pollutant	You must meet this emission limitation [a]	Using this averaging time	And determining compliance using this method
Cadmium	0.0045 milligrams per dry standard cubic meter.	3-run average (collect a minimum volume of 1 dry standard cubic meter).	Performance test (Method 29 of appendix A–8 of this part). Use ICPMS for the analytical finish.
Carbon monoxide	80 parts per million dry volume.	3-run average (1 hour minimum sample time per run).	Performance test (Method 10, 10A, or 10B of appendix A–4 of this part).
Dioxins/furans (total mass basis).	310 nanograms per dry standard cubic meter.	3-run average (collect a minimum volume of 1 dry standard cubic meter).	Performance test (Method 23 of appendix A–7 of this part).
Dioxins/furans (toxic equivalency basis).	25 nanograms per dry standard cubic meter.	3-run average (collect a minimum volume of 1 dry standard cubic meter).	Performance test (Method 23 of appendix A–7 of this part).
Hydrogen chloride	130 parts per million dry volume.	3-run average (collect a minimum volume of 1 dry standard cubic meter).	Performance test (Method 26A of appendix A–8 of this part).
Lead	0.041 milligrams per dry standard cubic meter.	3-run average (collect a minimum volume of 1 dry standard cubic meter).	Performance test (Method 29 of appendix A–8 of this part). Use ICPMS for the analytical finish.
Mercury	0.014 milligrams per dry standard cubic meter.	3-run average (collect a minimum volume of 1 dry standard cubic meter).	Performance test (Method 29 of appendix A–8 of this part).
Opacity	2%	Three 1-hour blocks consisting of ten 6-minute average opacity values.	Performance test (Method 9 of appendix A–4 of this part).
Oxides of nitrogen	120 parts per million dry volume.	3-run average (1 hour minimum sample time per run).	Performance test (Method 7E of appendix A–4 of this part).
Particulate matter filterable	33 milligrams per dry standard cubic meter.	3-run average (collect a minimum volume of 1 dry standard cubic meter).	Performance test (Method 5 or 29 of appendix A–3 or appendix A–8 of this part).
Sulfur dioxide	11 parts per million dry volume.	3-run average (1 hour minimum sample time per run).	Performance test (Method 6 or 6c of appendix A–4 of this part. Use a span gas with a concentration of 50 ppm or less.
Fugitive ash	Visible emissions for no more than 5% of the hourly observation period.	Three 1-hour observation periods.	Visible emission test (Method 22 of appendix A–7 of this part).

[a] All emission limitations (except for opacity) are measured at 7% oxygen, dry basis at standard conditions.

81. Table 10 to Subpart DDDD is added as follows:

TABLE 10 TO SUBPART DDDD OF PART 60—MODEL RULE—EMISSION LIMITATIONS THAT APPLY TO SMALL, REMOTE INCINERATORS AFTER [DATE OF PUBLICATION OF THE FINAL RULE IN THE FEDERAL REGISTER]

For the air pollutant	You must meet this emission limitation [a]	Using this averaging time	And determining compliance using this method
Cadmium	0.26 milligrams per dry standard cubic meter.	3-run average (collect a minimum volume of 1 dry standard cubic meter).	Performance test (Method 29 of appendix A–8 of this part).
Carbon monoxide	78 parts per million dry volume.	3-run average (1 hour minimum sample time per run).	Performance test (Method 10 of appendix A–4 of this part).
Dioxins/furans (total mass basis).	1600 nanograms per dry standard cubic meter.	3-run average (collect a minimum volume of 1 dry standard cubic meter).	Performance test (Method 23 of appendix A–7 of this part).
Dioxins/furans (toxic equivalency basis).	130 nanograms per dry standard cubic meter.	3-run average (collect a minimum volume of 1 dry standard cubic meter).	Performance test (Method 23 of appendix A–7 of this part).
Hydrogen chloride	150 parts per million dry volume.	3-run average (collect a minimum volume of 1 dry standard cubic meter).	Performance test (Method 26A of appendix A–8 of this part).
Lead	1.4 milligrams per dry standard cubic meter.	3-run average (collect a minimum volume of 1 dry standard cubic meter).	Performance test (Method 29 of appendix A–8 of this part).
Mercury	0.0029 milligrams per dry standard cubic meter.	3-run average (collect a minimum volume of 1 dry standard cubic meter).	Performance test (Method 29 of appendix A–8 of this part).
Opacity	13%	Three 1-hour blocks consisting of ten 6-minute average opacity values.	Performance test (Method 9 of appendix A–4 of this part).
Oxides of nitrogen	210 parts per million dry volume.	3-run average (1 hour minimum sample time per run).	Performance test (Method 7E of appendix A–4 of this part).
Particulate matter filterable	240 milligrams per dry standard cubic meter.	3-run average (collect a minimum volume of 1 dry standard cubic meter).	Performance test (Method 5 or 29 of appendix A–3 or appendix A–8 of this part).
Sulfur dioxide	44 parts per million dry volume.	3-run average (1 hour minimum sample time per run).	Performance test (Method 6 or 6c of appendix A–4 of this part).
Fugitive ash	Visible emissions for no more than 5% of the hourly observation period.	Three 1-hour observation periods.	Visible emission test (Method 22 of appendix A–7 of this part).

[a] All emission limitations (except for opacity) are measured at 7% oxygen, dry basis at standard conditions.

[FR Doc. 2010–10821 Filed 6–3–10; 8:45 am]

BILLING CODE 6560–50–P

Federal Register

Friday,
June 4, 2010

Part V

Environmental Protection Agency

40 CFR Part 63

National Emission Standards for Hazardous Air Pollutants for Major Sources: Industrial, Commercial, and Institutional Boilers and Process Heaters; Proposed Rule

ENVIRONMENTAL PROTECTION AGENCY

40 CFR Part 63

[EPA–HQ–OAR–2002–0058; FRL–9148–5]

RIN 2060–AG69

National Emission Standards for Hazardous Air Pollutants for Major Sources: Industrial, Commercial, and Institutional Boilers and Process Heaters

AGENCY: Environmental Protection Agency (EPA).

ACTION: Proposed rule.

SUMMARY: On September 13, 2004, under authority of section 112 of the Clean Air Act, EPA promulgated national emission standards for hazardous air pollutants for new and existing industrial/commercial/institutional boilers and process heaters. On June 19, 2007, the United States Court of Appeals for the District of Columbia Circuit vacated and remanded the national emission standards for hazardous air pollutants for industrial/commercial/institutional boilers and process heaters.

In response to the court's vacatur and remand, this action would require all major sources to meet hazardous air pollutants emissions standards reflecting the application of the maximum achievable control technology. The proposed rule would protect air quality and promote public health by reducing emissions of the hazardous air pollutants listed in section 112(b)(1) of the Clean Air Act.

We are also proposing that existing major source facilities with an affected boiler undergo an energy assessment on the boiler system to identify cost-effective energy conservation measures.

DATES: Comments must be received on or before July 19, 2010. Under the Paperwork Reduction Act, comments on the information collection provisions are best assured of having full effect if the Office of Management and Budget (OMB) receives a copy of your comments on or before July 6, 2010.

Public Hearing. We will hold a public hearing concerning this proposed rule and the interrelated proposed Boiler area source, CISWI, and RCRA rules, discussed in this proposal and published in the proposed rules section of today's **Federal Register**, on June 21, 2010. Persons requesting to speak at a public hearing must contact EPA by June 14, 2010.

ADDRESSES: Submit your comments, identified by Docket ID No. EPA–HQ–OAR–2002–0058, by one of the following methods:

- *http://www.regulations.gov.* Follow the instructions for submitting comments.
- *http://www.epa.gov/oar/docket.html.* Follow the instructions for submitting comments on the EPA Air and Radiation Docket Web site.
- *E-mail:* Comments may be sent by electronic mail (e-mail) to *a-and-r-docket@epa.gov,* Attention Docket ID No. EPA–HQ–OAR–2002–0058.
- *Fax:* Fax your comments to: (202) 566–9744, Docket ID No. EPA–HQ–OAR–2002–0058.
- *Mail: Send your comments to:* EPA Docket Center (EPA/DC), Environmental Protection Agency, Mailcode: 2822T, 1200 Pennsylvania Ave., NW., Washington, DC 20460, Docket ID No. EPA–HQ–OAR–2002–0058. Please include a total of two copies. In addition, please mail a copy of your comments on the information collection provisions to the Office of Information and Regulatory Affairs, OMB, *Attn:* Desk Officer for EPA, 725 17th St., NW., Washington, DC 20503.
- *Hand Delivery or Courier:* Deliver your comments to: EPA Docket Center, EPA West, Room 3334, 1301 Constitution Ave., NW., Washington, DC 20460. Such deliveries are only accepted during the Docket's normal hours of operation (8:30 a.m. to 4:30 p.m., Monday through Friday, excluding legal holiday), and special arrangements should be made for deliveries of boxed information.

Instructions: All submissions must include agency name and docket number or Regulatory Information Number (RIN) for this rulemaking. All comments will be posted without change and may be made available online at *http://www.regulations.gov,* including any personal information provided, unless the comment includes information claimed to be confidential business information (CBI) or other information whose disclosure is restricted by statute. Do not submit information that you consider to be CBI or otherwise protected through *http://www.regulations.gov* or e-mail. The *http://www.regulations.gov* Web site is an "anonymous access" system, which means EPA will not know your identity or contact information unless you provide it in the body of your comment. If you send an e-mail comment directly to EPA without going through *http://www.regulations.gov,* your e-mail address will be automatically captured and included as part of the comment that is placed in the public docket and made available on the Internet. If you submit an electronic comment, EPA recommends that you include your name and other contact information in the body of your comment and with any disk or CD–ROM you submit. If EPA cannot read your comment due to technical difficulties and cannot contact you for clarification, EPA may not be able to consider your comment. Electronic files should avoid the use of special characters, any form of encryption, and be free of any defects or viruses.

Public Hearing: We will hold a public hearing concerning this proposed rule on June 21, 2010. Persons interested in presenting oral testimony at the hearing should contact Ms. Pamela Garrett, Energy Strategies Group, at (919) 541–7966 by June 14, 2010. The public hearing will be held in the Washington DC area at a location and time that will be posted at the following Web site: *http://www.epa.gov/airquality/combustion.* Please refer to this Web site to confirm the date of the public hearing as well. If no one requests to speak at the public hearing by June 14, 2010 then the public hearing will be cancelled and a notification of cancellation posted on the following Web site: *http://www.epa.gov/airquality/combustion.*

Docket: All documents in the docket are listed in the *http://www.regulations.gov* index. Although listed in the index, some information is not publicly available, *e.g.,* CBI or other information whose disclosure is restricted by statute. Certain other material, such as copyrighted material, will be publicly available only in hard copy form. Publicly available docket materials are available either electronically in *http://www.regulations.gov* or in hard copy at the EPA Docket Center, Room 3334, 1301 Constitution Ave., NW., Washington, DC. The Public Reading Room is open from 8:30 a.m. to 4:30 p.m., Monday through Friday, excluding legal holidays. The telephone number for the Public Reading Room is (202) 566–1744, and the telephone number for the Air Docket is (202) 566–1742.

FOR FURTHER INFORMATION CONTACT: Mr. Brian Shrager, Energy Strategies Group, Sector Policies and Programs Division, (D243–01), Office of Air Quality Planning and Standards, U.S. Environmental Protection Agency, Research Triangle Park, North Carolina 27711; *Telephone number:* (919) 541–7689; Fax number (919) 541–5450; *E-mail address: shrager.brian@epa.gov.*

SUPPLEMENTARY INFORMATION: The information presented in this preamble is organized as follows:

I. General Information
A. Does this action apply to me?

B. What should I consider as I prepare my comments to EPA?
C. Where can I get a copy of this document?
D. When would a public hearing occur?
II. Background Information
A. What is the statutory authority for the proposed rule?
B. Summary of the Natural Resources Defense Council v. EPA Decision
C. Summary of Other Related Court Decisions
D. EPA's Response to the Vacatur
E. What is the relationship between the proposed rule and other combustion rules?
F. What are the health effects of pollutants emitted from industrial/commercial/institutional boilers and process heaters?
III. Summary of the Proposed Rule
A. What source categories are affected by the proposed rule?
B. What is the affected source?
C. Does the proposed rule apply to me?
D. What emission limitations and work practice standards must I meet?
E. What are the startup, shutdown, and malfunction (SSM) requirements?
F. What are the testing and initial compliance requirements?
G. What are the continuous compliance requirements?
H. What are the notification, recordkeeping and reporting requirements?
I. Submission of Emissions Test Results to EPA
IV. Rationale for the Proposed Rule
A. How did EPA determine which sources would be regulated under the proposed rule?
B. How did EPA select the format for the proposed rule?
C. How did EPA determine the proposed emission limitations for existing units?
D. How did EPA determine the MACT floor for existing units?
E. How did EPA consider beyond-the-floor for existing units?
F. Should EPA consider different subcategories for solid fuel boilers and process heaters?
G. How did EPA determine the proposed emission limitations for new units?
H. How did EPA determine the MACT floor for new units?
I. How did EPA consider beyond-the-floor for new units?
J. What other compliance alternatives were considered?
K. How did we select the compliance requirements?
L. What alternative compliance provisions are being proposed?
M. How did EPA determine compliance times for the proposed rule?
N. How did EPA determine the required records and reports for this proposed rule?
O. How does the proposed rule affect permits?
P. Alternative Standard for Consideration
V. Impacts of the Proposed Rule
A. What are the air impacts?
B. What are the water and solid waste impacts?
C. What are the energy impacts?
D. What are the control costs?
E. What are the economic impacts?
F. What are the social costs and benefits of the proposed rule?
VI. Public Participation and Request for Comment
VII. Relationship of the Proposed Action to Section 112(c)(6) of the CAA
VIII. Statutory and Executive Order Reviews
A. Executive Order 12866, Regulatory Planning and Review
B. Executive Order 13132, Federalism
C. Executive Order 13175, Consultation and Coordination With Indian Tribal Governments
D. Executive Order 13045, Protection of Children From Environmental Health Risks and Safety Risks
E. Unfunded Mandates Reform Act of 1995
F. Regulatory Flexibility Act as Amended by the Small Business Regulatory Enforcement Fairness Act (RFA) of 1996 SBREFA), 5 U.S.C. 601 *et seq.*
G. Paperwork Reduction Act
H. National Technology Transfer and Advancement Act
I. Executive Order 13211, Actions Concerning Regulations That Significantly Affect Energy Supply, Distribution, or Use
J. Executive Order 12898: Federal Actions To Address Environmental Justice in Minority Populations and Low-Income Populations

I. General Information

A. Does this action apply to me?

The regulated categories and entities potentially affected by the proposed standards include:

Category	NAICS code [1]	Examples of potentially regulated entities
Any industry using a boiler or process heater as defined in the proposed rule.	211	Extractors of crude petroleum and natural gas.
	321	Manufacturers of lumber and wood products.
	322	Pulp and paper mills.
	325	Chemical manufacturers.
	324	Petroleum refineries, and manufacturers of coal products.
	316, 326, 339	Manufacturers of rubber and miscellaneous plastic products.
	331	Steel works, blast furnaces.
	332	Electroplating, plating, polishing, anodizing, and coloring.
	336	Manufacturers of motor vehicle parts and accessories.
	221	Electric, gas, and sanitary services.
	622	Health services.
	611	Educational services.

[1] North American Industry Classification System.

This table is not intended to be exhaustive, but rather provides a guide for readers regarding entities likely to be affected by this action. To determine whether your facility, company, business, organization, etc., would be regulated by this action, you should examine the applicability criteria in 40 CFR 63.7485 of subpart DDDDD (National Emission Standards for Hazardous Air Pollutants (NESHAP) for Industrial, Commercial, and Institution Boilers and Process Heaters). If you have any questions regarding the applicability of this action to a particular entity, consult either the air permitting authority for the entity or your EPA regional representative as listed in 40 CFR 63.13 of subpart A (General Provisions).

B. What should I consider as I prepare my comments to EPA?

Do not submit information containing CBI to EPA through *http://www.regulations.gov* or e-mail. Send or deliver information identified as CBI only to the following address: Roberto Morales, OAQPS Document Control Officer (C404–02), Office of Air Quality Planning and Standards, U.S.

Environmental Protection Agency, Research Triangle Park, North Carolina 27711, Attention: Docket ID EPA–HQ–OAR–2002–0058. Clearly mark the part or all of the information that you claim to be CBI. For CBI information in a disk or CD–ROM that you mail to EPA, mark the outside of the disk or CD–ROM as CBI and then identify electronically within the disk or CD–ROM the specific information that is claimed as CBI. In addition to one complete version of the comment that includes information claimed as CBI, a copy of the comment that does not contain the information claimed as CBI must be submitted for inclusion in the public docket. Information so marked will not be disclosed except in accordance with procedures set forth in 40 CFR part 2.

C. Where can I get a copy of this document?

In addition to being available in the docket, an electronic copy of this proposed action will also be available on the World Wide Web (WWW) through the Technology Transfer Network (TTN). Following signature, a copy of the proposed action will be posted on the TTN's policy and guidance page for newly proposed or promulgated rules at the following address: *http://www.epa.gov/ttn/oarpg/*. The TTN provides information and technology exchange in various areas of air pollution control.

D. When would a public hearing occur?

We will hold a public hearing concerning this proposed rule on June 21, 2010. Persons interested in presenting oral testimony at the hearing should contact Ms. Pamela Garrett, Energy Strategies Group, at (919) 541–7966 by June 14, 2010. The public hearing will be held in the Washington, DC area at a location and time that will be posted at the following Web site: *http://www.epa.gov/airquality/combustion*. Please refer to this Web site to confirm the date of the public hearing as well. If no one requests to speak at the public hearing by June 14, 2010, then the public hearing will be cancelled and a notification of cancellation posted on the following Web site: *http://www.epa.gov/airquality/combustion.*

II. Background Information

A. What is the statutory authority for this proposed rule?

Section 112(d) of the Clean Air Act (CAA) requires EPA to set emissions standards for hazardous air pollutants (HAP) emitted by major stationary sources based on the performance of the maximum achievable control technology (MACT). The MACT standards for existing sources must be at least as stringent as the average emissions limitation achieved by the best performing 12 percent of existing sources (for which the Administrator has emissions information) or the best performing 5 sources for source categories with less than 30 sources (CAA section 112(d)(3)(A) and (B)). This level of minimum stringency is called the MACT floor. For new sources, MACT standards must be at least as stringent as the control level achieved in practice by the best controlled similar source (CAA section 112(d)(3)). EPA also must consider more stringent "beyond-the-floor" control options. When considering beyond-the-floor options, EPA must consider not only the maximum degree of reduction in emissions of HAP, but must take into account costs, energy, and nonair environmental impacts when doing so.

CAA section 112(c)(6) requires EPA to list categories and subcategories of sources assuring that sources accounting for not less than 90 percent of the aggregate emissions of each such pollutant (alkylated lead compounds; polycyclic organic matter; hexachlorobenzene; mercury; polychlorinated byphenyls; 2,3,7,8-tetrachlorodibenzofurans; and 2,3,7,8-tetrachloroidibenzo-p-dioxin) are subject to standards under subsection 112(d)(2) or (d)(4). Standards established under CAA section 112(d)(2) must reflect the performance of MACT. "Industrial Coal Combustion," "Industrial Oil Combustion," "Industrial Wood/Wood Residue Combustion," "Commercial Coal Combustion," "Commercial Oil Combustion," and "Commercial Wood/Wood Residue Combustion" are listed as source categories for regulation pursuant to CAA section 112(c)(6) due to emissions of polycyclic organic matter (POM) and mercury (63 FR 17838, 17848, April 10, 1998). In the documentation for the 112(c)(6) listing, the commercial fuel combustion categories included institutional fuel combustion ("1990 Emissions Inventory of Section 112(c)(6) Pollutants, Final Report," April 1998).

CAA section 129(a)(1)(A) requires EPA to establish specific performance standards, including emission limitations, for "solid waste incineration units" generally, and, in particular, for "solid waste incineration units combusting commercial or industrial waste" (section 129(a)(1)(D)). Section 129 defines "solid waste incineration unit" as "a distinct operating unit of any facility which combusts any solid waste material from commercial or industrial establishments or the general public." Section 129(g)(1). Section 129 also provides that "solid waste" shall have the meaning established by EPA pursuant to its authority under the Resource Conservation and Recovery Act. Section 129(g)(6).

In *Natural Resources Defense Council* v. *EPA,* 489 F. 3d 1250, 1257–61 (DC Cir. 2007), the court vacated the Commercial and Industrial Solid Waste Incineration (CISWI) Definitions Rule, 70 FR 55568 (September 22, 2005), which EPA issued pursuant to CAA section 129(a)(1)(D). In that rule, EPA defined the term "commercial or industrial solid waste incineration unit" to mean a combustion unit that combusts "commercial or industrial waste." The rule defined "commercial or industrial waste" to mean waste combusted at a unit that does not recover thermal energy from the combustion for a useful purpose. Under these definitions, only those units that combusted commercial or industrial waste and were not designed to, or did not operate to, recover thermal energy from the combustion would be subject to section 129 standards. The District of Columbia Circuit (DC Circuit) rejected the definitions contained in the CISWI Definitions Rule and interpreted the term "solid waste incineration unit" in CAA section 129(g)(1) "to unambiguously include among the incineration units subject to its standards any facility that combusts any commercial or industrial solid waste material at all—subject to the four statutory exceptions identified in [CAA section 129(g)(1).]" *NRDC* v. *EPA,* 489 F.3d 1250, 1257–58.

CAA section 129 covers any facility that combusts any solid waste; CAA section 112(g)(6) directs the Agency to the Resource Conservation and Recovery Act (RCRA) in terms of the definition of solid waste. The Agency is in the process of defining solid waste for purposes of Subtitle D of RCRA. EPA initiated a rulemaking to define which secondary materials are "solid waste" for purposes of subtitle D (nonhazardous waste) of RCRA when burned in a combustion unit. (See Advance Notice of Proposed Rulemaking (74 FR 41, January 2, 2009) soliciting comment on whether certain secondary materials used as alternative fuels or ingredients are solid wastes within the meaning of Subtitle D of RCRA.) If a unit combusts solid waste, it is subject to CAA section 129 of the Act, unless it falls within one of the four specified exceptions in CAA section 129(g).

The solid waste definitional rulemaking under RCRA is being proposed in a parallel action and is

relevant to this proceeding because some industrial, commercial, or institutional boilers and process heaters combust secondary materials as alternative fuels. If industrial, commercial, or institutional boilers or process heaters combusts secondary materials that are solid waste under the proposed definitional rule, those units would be subject to section 129. The units subject to this rule include those industrial, commercial, or institutional boilers and process heaters that do not combust solid waste. EPA recognizes that it has imperfect information on the exact nature of the secondary materials which boilers and process heaters combust, including, for example, how much processing of such materials occurs, if any. We nevertheless used the information currently available to the Agency to determine which materials are solid waste and, therefore, subject to CAA section 129, and which are not solid waste and, therefore, subject to CAA section 112.

B. Summary of the Natural Resources Defense Council v. *EPA Decision*

On September 13, 2004, EPA issued the NESHAP for Industrial, Commercial, and Institutional Boilers and Process Heaters (40 CFR 55218) (the Boiler MACT). We identified 18 subcategories of boilers and process heaters emitting four different types of HAPs. *See* 69 FR 55,223–24. EPA set out to establish the MACT floor for each subcategory emitting each HAP according to the effectiveness of various add-on technologies. (*See* 68 FR 1660, 1674, Jan. 13, 2003 (proposed rule).) Applying this methodology, EPA set 25 numerical emission standards. The 2004 final rule established emission limitations for particulate matter (PM), as a surrogate for non-mercury HAP metals, mercury, and hydrogen chloride (HCl), as a surrogate for acid gas HAP, for existing large solid fuel-fired sources only. For the remaining 47 boiler subcategory/HAP emissions, EPA determined that the appropriate MACT floor was "no emissions reduction" because "the best-performing sources were not achieving emissions reductions through the use of an emission control system and there were no other appropriate methods by which boilers and process heaters could reduce HAP emissions." (69 FR 55,233.) Accordingly, we established no standards. In addition, we set risk-based standards, also known as health-based compliance alternatives, as alternatives to the MACT-based standards for hydrogen chloride and manganese.

EPA issued emissions standards for CISWI units on December 1, 2000, and as part of that rulemaking, defined the term "commercial and industrial waste" to mean solid waste combusted in an enclosed device using controlled flame combustion without energy recovery that is a distinct operating unit of any commercial or industrial facility. In response to a petition for reconsideration, EPA filed a motion for voluntary remand, which the court granted on September 6, 2001. On remand, EPA solicited comments on the CISWI Rule's definitions of "solid waste," "commercial and industrial waste" and "CISWI unit." On September 22, 2005, EPA issued the CISWI Definitions Rule, which contained definitions that were substantively the same as those issued before reconsideration. In particular, the 2005 CISWI Definitions Rule defined "commercial or industrial waste" to include only waste that is combusted at a facility that cannot or does not use a process that recovers thermal energy from the combustion for a useful purpose.

EPA received separate petitions from environmental groups, industry, and municipalities seeking judicial review of the NESHAP for Industrial, Commercial, and Institutional Boilers and Process Heaters (Boiler MACT) as well as amendments to definitional terms in the Standards of Performance for New Stationary Sources and Emission Guidelines for Existing Sources: Commercial and Industrial Solid Waste Incineration Units (CISWI Definitions Rule), promulgated pursuant to CAA section 129. The environmental organizations challenged the CISWI Definitions Rule on the ground that its definition of "commercial or industrial waste" was inconsistent with the plain language of CAA section 129 and therefore impermissibly constricted the class of "solid waste incineration unit[s]" that were subject to the emission standards of the CISWI Rule. The environmental groups also challenged specific emission standards that EPA promulgated in the Boiler MACT and EPA's methodology for setting them. The municipalities—the American Municipal Power-Ohio, Inc. and six of its members, the cities of Dover, Hamilton, Orrville, Painesville, Shelby and St. Mary's—challenged the Boiler MACT on the grounds that EPA failed to comply with the requirements of the Regulatory Flexibility Act (RFA) and that the standards as applied to small municipal utilities are unlawful.

As explained further below, the Court concluded that EPA's definition of "commercial or industrial waste," as incorporated in the definition of "commercial and industrial solid waste incineration unit" (CISWI unit), was inconsistent with the plain language of CAA section 129 and that the CISWI Definitions Rule must, therefore, be vacated. The Court also vacated and remanded the Boiler MACT, finding that the Boiler MACT must be substantially revised as a consequence of the vacatur and remand of the CISWI Definitions Rule.

In its decision, the Court agreed with the environmental petitioners that EPA's definition of "commercial or industrial waste," as incorporated in the definition of CISWI units, conflicted with the plain language of CAA section 129(g)(1). That provision defines "solid waste incineration unit" to mean "any facility which combusts any solid waste material" from certain types of establishments, with four specific exclusions. The Court stated that, based on the use of the term "any" and the specific exclusions for only certain types of facilities from the definition of "solid waste incineration unit," CAA section 129 unambiguously includes among the incineration units subject to its standards any facility that combusts any commercial or industrial solid waste material at all—subject only to the four statutory exclusions. The Court held that the definitions EPA promulgated in the CISWI Definitions Rule constricted the plain language of CAA section 129(g)(1), because the CISWI Definitions Rule excluded from its universe operating units that combusted solid waste and were designed for or operating with energy recovery.

Having determined that EPA's definition of "commercial and industrial solid waste incineration unit" conflicts with the plain meaning of CAA section 129 and must, therefore, be vacated, the Court also vacated the Boiler MACT because it concluded that the Boiler MACT would need to be revised because the universe of boilers subject to its standards will be different once EPA revises the CISWI definitions rule consistent with the Court's opinion. The Court did not address petitioners' specific challenges to the Boiler MACT.

C. Summary of Other Related Court Decisions

In March 2007, the DC Circuit Court issued an opinion (*Sierra Club* v. *EPA,* 479 F. 3d 875 (DC Cir. 2007) (Brick MACT)) vacating and remanding CAA section 112(d) MACT standards for the Brick and Structural Clay Ceramics source categories. Some key holdings in that case were:

- Floors for existing sources must reflect the average emission limitation achieved by the best-performing 12 percent of existing sources, not levels

EPA considers to be achievable by all sources (479 F. 3d at 880–81);

• EPA cannot set floors of "no control." The Court reiterated its prior holdings, including National Lime Association, confirming that EPA must set floor standards for all HAP emitted by the major source, including those HAP that are not controlled by at-the-stack control devices (479 F. 3d at 883);

• EPA cannot ignore non-technology factors that reduce HAP emissions. Specifically, the Court held that "EPA's decision to base floors exclusively on technology even though non-technology factors affect emissions violates the Act." (479 F. 3d at 883)

Based on the Brick MACT decision, we believe a source's performance resulting from the presence or absence of HAP in fuel materials must be accounted for in establishing floors; i.e., a low emitter due to low HAP fuel materials can still be a best performer. In addition, the fact that a specific level of performance is unintended is not a legal basis for excluding the source's performance from consideration. (*National Lime Ass'n,* 233 F. 3d at 640.)

The Brick MACT decision also stated that EPA may account for variability in setting floors. However, the court found that EPA erred in assessing variability because it relied on data from the worst performers to estimate best performers' variability, and held that "EPA may not use emission levels of the worst performers to estimate variability of the best performers without a demonstrated relationship between the two." (479 F. 3d at 882.)

The majority opinion in the Brick MACT case does not address the possibility of subcategorization to address differences in the HAP content of raw materials. However, in his concurring opinion Judge Williams stated that EPA's ability to create subcategories for sources of different classes, size, or type (CAA section 112(d)(1)) may provide a means out of the situation where the floor standards are achieved for some sources, but the same floors cannot be achieved for other sources due to differences in local raw materials whose use is essential. (*Id.* At 884–85.9)

A second court opinion is also relevant to this proposal. In *Sierra Club* v. *EPA,* 551 F. 3d 1019 (DC Cir. 2008), the court vacated the portion of the regulations contained in the General Provisions which exempt major sources from MACT standards during periods of startup, shutdown and malfunction (SSM). The regulations (in 40 CFR 63.6(f)(1) and 63.6(h)(1)) provided that sources need not comply with the relevant CAA section 112(d) standard during SSM events and instead must "minimize emissions * * * to the greatest extent which is consistent with safety and good air pollution control practices." The vacated Boiler MACT did not contain specific provisions covering operation during SSM operating modes; rather it referenced the now-vacated exemption in the General Provisions. As a result of the court decision, we are addressing SSM in this proposed rulemaking. Discussion of this issue may be found later in this preamble.

D. EPA's Response to the Vacatur

In response to the *NRDC* v. *EPA* mandate, we initiated an information collection effort entitled "Information Collection Effort for Facilities with Combustion Units." This information collection was conducted by EPA's Office of Air and Radiation pursuant to CAA section 114 to assist the Administrator in developing emissions standards for boilers/process heaters and CISWI units (collectively, "combustion units") pursuant to CAA sections 112(d) and 129. CAA section 114(a) states, in pertinent part:

> For the purpose of * * * (iii) carrying out any provision of this Chapter * * * (1) the Administrator may require any person who owns or operates any emission source * * * to- * * * (D) sample such emissions (in accordance with such procedures or methods, at such locations, at such intervals, during such periods and in such manner as the Administrator shall prescribe); (E) keep records on control equipment parameters, production variables or other indirect data when direct monitoring of emissions is impractical * * * (G) provide such other information as the Administrator may reasonably require * * *

There were two components to the information collection. To obtain the information necessary to identify and categorize all combustion units potentially affected by the revised standards for boilers/process heaters and for CISWI units, the first component of the information collection effort solicited information from all potentially affected combustion units in the format of an electronic survey. The survey was submitted to the following facilities: (1) All facilities that submitted an initial notification for the 2004 boiler MACT standard, (2) all facilities identified by States as being subject to the 2004 boiler MACT standard, and (3) facilities that are classified as a major source in their Title V permit that have a boiler or process heater listed in their permit. The survey was also sent to units covered by the 2000 CISWI emissions standards (40 CFR part 60 subpart CCCC) and to facilities that have incineration units (e.g., energy recovery units) that were listed as exempt under the 2000 CISWI standard. Each facility was required to complete the survey for all combustion units located at the facility. The information requested for each combustion unit included the unit design, operation, air pollution control data, the fuels/materials burned, and available emissions test data, continuous emission monitoring (CEM) data, fuel/material analysis data, and permitted and regulatory emission limits.

The second component of the information collection request effort consisted of requiring the owners/operators of 169 boilers/process heaters to conduct emission testing for HAP and HAP surrogates. We first analyzed the results of the survey to determine if sufficient emissions data existed to develop emission standards under CAA sections 112(d) for all types of boilers/process heaters, all types of materials combusted, and all HAP to be regulated. If data were not sufficient, then we selected pools of candidates to conduct emission testing. We submitted a list of candidates to stakeholders, including state, industry, and environmental stakeholders, who had an opportunity to comment on the technical feasibility, the least-cost impact of the testing program, and the appropriateness of the testing being requested. We then made a selection of test sites after taking into account stakeholder comments. The sites selected were required to conduct an outlet stack test, consisting of three runs, in accordance with EPA-approved protocols, for all of the following pollutants: PM (filterable, condensable, and $PM_{2.5}$), dioxins/furans (D/F), hydrogen chloride/hydrogen fluoride, mercury, metals (including antimony, arsenic, beryllium, cadmium, chromium, cobalt, lead, manganese, nickel, phosphorus, and selenium), carbon monoxide (CO), total hydrocarbons (THC), formaldehyde, oxides of nitrogen (NO_X), and sulfur dioxide (SO_2). Six facilities (two coal-fired, two biomass-fired, and two gas-fired boilers) were required to collect CEM data over 30 operating days using mobile CEM devices for CO, THC, and NO_X. The owner/operator of each selected combustion unit was also required to collect and analyze, in accordance with acceptable procedures, the material(s) fed to the combustion unit during each stack test. The results of the stack tests and the analyses of materials combusted were required to be submitted to the Agency and are available in the docket and can be

downloaded at *http://www.epa.gov/ttn/atw/boiler/boilerpg.html.*

When we compared information on boilers and process heaters from facilities submitting initial notifications to comply with the vacated 2004 Boiler MACT to the information gathering effort conducted for the 2004 Boiler MACT, a large disparity was identified in the number of potentially affected units at major sources of HAP. Since the last combustion unit data gathering effort in 1996, many sources have shut down, others have selected to operate with a permit limit on their HAP emissions in order to avoid being subject to the Boiler MACT (i.e., synthetic area source), and some units have switched out older solid fuel units for newer equipment due to increased insurance and maintenance costs.

Based on the definition of solid waste as set forth in a parallel proposed action, we revised the population of combustion units subject to CAA section 129 (because they combust solid waste) and the population of boilers and process heaters subject to CAA section 112 (because they do not combust solid waste). We then used the new data to develop a revised NESHAP for boilers and process heaters under CAA section 112 and revised standards for incineration units covered by CAA section 129. Specifically, the data provide the Agency with updated information on the number of potentially affected units, available emission test data, and fuel/material analysis data to address variability. We are using all of the information before the Administrator to calculate the MACT floors, set emission limits, and evaluate the emission impacts of various regulatory options for these revised rulemakings.

E. What is the relationship between this proposed rule and other combustion rules?

The proposed rule regulates source categories covering industrial boilers, institutional boilers, commercial boilers, and process heaters. These source categories potentially include combustion units that are already regulated by other MACT standards. Therefore, we are excluding from this proposed rule any boiler or process heater that is subject to regulation under other MACT standards.

In 1986, EPA had codified new source performance standards (NSPS) for industrial boilers (40 CFR part 60, subparts Db and Dc) and revised portions of those standards in 1999 and 2006. The NSPS regulates emissions of PM, SO_2, and NO_X from boilers constructed after June 19, 1984. Sources subject to the NSPS will be subject to the final CAA section 112(d) standards for boilers and process heaters because it regulates sources of HAP while the NSPS do not. However, in developing the proposed rule, we considered the monitoring requirements, testing requirements, and recordkeeping requirements of the NSPS to avoid duplicating requirements.

This proposed rule addresses the combustion of non-solid waste materials in boilers and process heaters. If an owner or operator of an affected source subject to these proposed standards were to start combusting a solid waste (as defined by the Administrator under RCRA), the affected source would cease to be subject to this action and would instead be subject to regulation under CAA section 129. A rulemaking under CAA section 129 is being proposed in a parallel action and is relevant to this action because it would apply to boilers and process heaters located at a major source that combust any solid waste. EPA is taking comment on whether a boiler or process heater could then opt back into regulation under this proposed rule by taking a federally enforceable restriction precluding the future combustion of any solid waste material.

F. What are the health effects of pollutants emitted from industrial/commercial/institutional boilers and process heaters?

This proposed rule protects air quality and promotes the public health by reducing emissions of some of the HAP listed in CAA section 112(b)(1). As noted above, emissions data collected during development of the proposed rule show that hydrogen chloride emissions represent the predominant HAP emitted by industrial, commercial, and institutional (ICI) boilers, accounting for 61 percent of the total HAP emissions.[1] ICI boilers and process heaters also emit lesser amounts of hydrogen fluoride, accounting for about 17 percent of total HAP emissions, and metals (arsenic, cadmium, chromium, mercury, manganese, nickel, and lead) accounting for about 6 percent of total HAP emissions. Organic HAP (formaldehyde, POM, acetaldehyde, benzene) account for about 15 percent of total HAP emissions. Exposure to these HAP, depending on exposure duration and levels of exposures, can be associated with a variety of adverse health effects. These adverse health effects may include, for example, irritation of the lung, skin, and mucus membranes, effects on the central nervous system, damage to the kidneys, and alimentary effects such as nausea and vomiting. We have classified two of the HAP as human carcinogens (arsenic and chromium VI) and four as probable human carcinogens (cadmium, lead, dioxins/furans, and nickel). We do not know the extent to which the adverse health effects described above occur in the populations surrounding these facilities. However, to the extent the adverse effects do occur, this proposed rule would reduce emissions and subsequent exposures.

[1] *See* Memorandum "Methodology for Estimating Impacts from Industrial, Commercial, Institutional Boilers and Process Heaters at Major Sources of Hazardous Air Pollutant Emissions" located in the docket.

III. Summary of This Proposed Rule

This section summarizes the requirements proposed in today's action. Section IV below provides our rationale for the proposed requirements.

A. What source categories are affected by this proposed rule?

This proposed rule affects industrial boilers, institutional boilers, commercial boilers, and process heaters. In this proposed rule, process heaters are defined as units in which the combustion gases do not directly come into contact with process material or gases in the combustion chamber (e.g., indirect fired). Boiler means an enclosed device using controlled flame combustion and having the primary purpose of recovering thermal energy in the form of steam or hot water.

B. What is the affected source?

The affected source is: (1) The collection of all existing industrial, commercial, or institutional boilers or process heaters within a subcategory located at a major source facility that do not combust solid waste or (2) each new or reconstructed industrial, commercial, or institutional boiler or process heater located at a major source facility that do not combust solid waste, as that term is defined by the Administrator under RCRA.

The affected source does not include boilers and process heaters that are subject to another standard under 40 CFR part 63 or a standard established under CAA section 129.

C. Does this proposed rule apply to me?

This proposed rule applies to you if you own or operate a boiler or process heater at a major source meeting the requirements discussed previously in this preamble. A major source of HAP emissions is any stationary source or group of stationary sources located within a contiguous area and under common control that emits or has the

potential to emit considering controls 10 tons per year or more of any HAP or 25 tons per year or more of any combination of HAP.

D. What emission limitations and work practice standards must I meet?

We are proposing the emission limits presented in Table 1 of this preamble. Emission limits were developed for new and existing sources for eleven subcategories, which we developed based on unit design.

We are proposing that if your new or existing boiler or process heater burns at least 10 percent coal on an annual average heat input [2] basis, the unit is in one of the coal subcategories. If your new or existing boiler or process heater burns at least 10 percent biomass, on an annual average heat input basis, and less than 10 percent coal, on an annual average heat input basis, we are proposing that the unit is in one of the biomass subcategories. If your new or existing boiler or process heater burns at least 10 percent liquid fuel (such as distillate oil, residual oil), and less than 10 percent solid fuel, on an annual heat input basis, we are proposing that the unit is in the liquid subcategory. If your new or existing boiler or process heater burns gaseous fuel and less than 10 percent, on an annual average heat input basis, of liquid or solid fuel, we are proposing that the unit is in one of the gas subcategories.

TABLE 1—EMISSION LIMITS FOR BOILERS AND PROCESS HEATERS

[Pounds per million British thermal units]

Subcategory	Particulate matter (PM)	Hydrogen chloride (HCl)	Mercury (Hg)	Carbon monoxide (CO) (ppm @3% oxygen)	Dioxins/ furans (total TEQ) (ng/dscm)
Existing—Coal Stoker	0.02	0.02	0.000003	50	0.003
Existing—Coal Fluidized Bed	0.02	0.02	0.000003	30	0.002
Existing—Pulverized Coal	0.02	0.02	0.000003	90	0.004
Existing—Biomass Stoker	0.02	0.006	0.0000009	560	0.004
Existing—Biomass Fluidized Bed	0.02	0.006	0.0000009	250	0.02
Existing—Biomass Suspension Burner/Dutch Oven	0.02	0.006	0.0000009	1010	0.03
Existing—Biomass Fuel Cells	0.02	0.006	0.0000009	270	0.02
Existing—Liquid	0.004	0.0009	0.000004	1	0.002
Existing—Gas (Other Process Gases)	0.05	0.000003	0.0000002	1	0.009
New—Coal Stoker	0.001	0.00006	0.000002	7	0.003
New—Coal Fluidized Bed	0.001	0.00006	0.000002	30	0.00003
New—Pulverized Coal	0.001	0.00006	0.000002	90	0.002
New—Biomass Stoker	0.008	0.004	0.0000002	560	0.00005
New—Biomass Fluidized Bed	0.008	0.004	0.0000002	40	0.007
New—Biomass Suspension Burner/Dutch Oven	0.008	0.004	0.0000002	1010	0.03
New—Biomass Fuel Cells	0.008	0.004	0.0000002	270	0.0005
New—Liquid	0.002	0.0004	0.0000003	1	0.002
New—Gas (Other Process Gases)	0.003	0.000003	0.0000002	1	0.009

The proposed emission limits in the above table apply only to existing boilers and process heaters that have a designed heat input capacity of 10 million British thermal units (Btu) per hour or greater. Pursuant to CAA section 112(h), we are proposing a work practice standard for three particular classes of boilers and process heaters: Existing units that have a designed heat input capacity of less than 10 million Btu per hour and new and existing units in the Gas 1 (natural gas/refinery gas) subcategory and in the metal process furnaces subcategory. The work practice standard being proposed for these boilers and process heaters would require the implementation of a tune-up program as described in section III.F of this preamble.

We are also proposing a beyond-the-floor standard for all existing major source facilities having affected boilers or process heaters that would require the performance of a one-time energy assessment, as described in section III.F of this preamble, by qualified personnel, on the affected boilers and facility to identify any cost-effective energy conservation measures.

E. What are the startup, shutdown, and malfunction (SSM) requirements?

The United States Court of Appeals for the District of Columbia Circuit vacated portions of two provisions in EPA's CAA Section 112 regulations governing the emissions of HAP during periods of startup, shutdown, and malfunction (SSM). *Sierra Club* v. *EPA,* 551 F.3d 1019 (DC Cir. 2008), *cert. denied, 2010 U.S. LEXIS 2265 (2010).* Specifically, the Court vacated the SSM exemption contained in 40 CFR 63.6(f)(1) and 40 CFR 63.6(h)(1), that are part of a regulation, commonly referred to as the "General Provisions Rule," that EPA promulgated under section 112 of the CAA. When incorporated into CAA Section 112(d) regulations for specific source categories, these two provisions exempt sources from the requirement to comply with the otherwise applicable CAA section 112(d) emission standard during periods of SSM.

Consistent with *Sierra Club* v. *EPA,* EPA has established standards in this rule that apply at all times. EPA has attempted to ensure that we have not incorporated into proposed regulatory language any provisions that are inappropriate, unnecessary, or redundant in the absence of an SSM exemption. We are specifically seeking comment on whether there are any such provisions that we have inadvertently incorporated or overlooked. We also request comment on whether there are additional provisions that should be added to regulatory text in light of the absence of an SSM exemption and provisions related to the SSM exemption (such as the SSM plan requirement and SSM recordkeeping and reporting provisions).

In establishing the standards in this rule, EPA has taken into account startup and shutdown periods and, for the

[2] Heat input means heat derived from combustion of fuel in a boiler or process heater and does not include the heat derived from preheated combustion air, recirculated flue gases or exhaust gases from other sources (such as stationary gas turbines, internal combustion engines, and kilns).

reasons explained below, has not established different standards for those periods. The standards that we are proposing are daily or monthly averages. Continuous emission monitoring data obtained from best performing units, and used in establishing the standards, include periods of startup and shutdown. Boilers, especially solid fuel-fired boilers, do not normally startup and shutdown more the once per day. Thus, we are not establishing a separate emission standard for these periods because startup and shutdown are part of their routine operations and, therefore, are already addressed by the standards. Periods of startup, normal operations, and shutdown are all predictable and routine aspects of a source's operation. We have evaluated whether it is appropriate to have the same standards apply during startup and shutdown as applied to normal operations.

Periods of startup, normal operations, and shutdown are all predictable and routine aspects of a source's operations. However, by contrast, malfunction is defined as a "sudden, infrequent, and not reasonably preventable failure of air pollution control and monitoring equipment, process equipment or a process to operate in a normal or usual manner * * *" (40 CFR 63.2). EPA has determined that malfunctions should not be viewed as a distinct operating mode and, therefore, any emissions that occur at such times do not need to be factored into development of CAA section 112(d) standards, which, once promulgated, apply at all times. It is reasonable to interpret section 112(d) as not requiring EPA to account for malfunctions in setting emissions standards. For example, we note that Section 112 uses the concept of "best performing" sources in defining MACT, the level of stringency that major source standards must meet. Applying the concept of "best performing" to a source that is malfunctioning presents significant difficulties. The goal of best performing sources is to operate in such a way as to avoid malfunctions of their units.

Moreover, even if malfunctions were considered a distinct operating mode, we believe it would be impracticable to take malfunctions into account in setting CAA section 112(d) standards for major source boilers and process heaters. As noted above, by definition, malfunctions are sudden and unexpected events and it would be difficult to set a standard that takes into account the myriad different types of malfunctions that can occur across all sources in the category. Moreover, malfunctions can vary in frequency, degree, and duration, further complicating standard setting.

In the event that a source fails to comply with the applicable CAA section 112(d) standards as a result of a malfunction event, EPA would determine an appropriate response based on, among other things, the good faith efforts of the source to minimize emissions during malfunction periods, including preventative and corrective actions, as well as root cause analyses to ascertain and rectify excess emissions. EPA would also consider whether the source's failure to comply with the CAA section 112(d) standard was, in fact, "sudden, infrequent, not reasonably preventable" and was not instead "caused in part by poor maintenance or careless operation." 40 CFR 63.2 (definition of malfunction).

F. What are the testing and initial compliance requirements?

We are proposing that the owner or operator of a new or existing boiler or process heater must conduct performance tests to demonstrate compliance with all applicable emission limits. Affected units would be required to conduct the following compliance tests where applicable:

(1) Conduct initial and annual stack tests to determine compliance with the PM emission limits using EPA Method 5 or 17.

(2) Conduct initial and annual stack tests to determine compliance with the mercury emission limits using EPA method 29 or ASTM–D6784–02 (Ontario Hydro Method).

(3) Conduct initial and annual stack tests to determine compliance with the HCl emission limits using EPA Method 26A or EPA Method 26 (if no entrained water droplets in the sample).

(4) Use EPA Method 19 to convert measured concentration values to pound per million Btu values.

(5) Conduct initial and annual test to determine compliance with the CO emission limits using either EPA Method 10 or a CO CEMS.

(6) Conduct initial and annual test to determine compliance with the D/F emission limits using EPA Method 23.

As part of the initial compliance demonstration, we are proposing that you monitor specified operating parameters during the initial performance tests that you would conduct to demonstrate compliance with the PM, mercury, D/F, and HCl emission limits. You would calculate the average parameter values measured during each test run over the three run performance test. The average of the three average values (depending on the parameter measured) for each applicable parameter would establish the site-specific operating limit. The applicable operating parameters for which operating limits would be required to be established are based on the emissions limits applicable to your unit as well as the types of add-on controls on the unit. The following is a summary of the operating limits that we are proposing to be established for the various types of the following units:

(1) For boilers and process heaters without wet or dry scrubbers that must comply with an HCl emission limit, you must measure the average chlorine content level in the input fuel(s) during the HCl performance test. This is your maximum chlorine input operating limit.

(2) For boilers and process heaters with wet scrubbers, you must measure pressure drop and liquid flow rate of the scrubber during the performance test, and calculate the average value for each test run. The average of the three test run averages establishes your minimum site-specific pressure drop and liquid flow rate operating levels. If different average parameter levels are measured during the mercury, PM and HCl tests, the highest of the average values becomes your site-specific operating limit. If you are complying with an HCl emission limit, you must measure pH of the scrubber effluent during the performance test for HCl and determine the average for each test run and the average value for the performance test. This establishes your minimum pH operating limit.

(3) For boilers and process heaters with sorbent injection, you would be required to measure the sorbent injection rate for each sorbent used during the performance tests for HCl, mercury, and D/F and calculate the average for each sorbent for each test run. The average of the three test run averages established during the performance tests would be your site-specific minimum sorbent injection rate operating limit. If different sorbents and/or injection rates are used during the mercury, HCl, and D/F tests, the average value for each sorbent becomes your site-specific operating limit.

(4) For boilers and process heaters with fabric filters in combination with wet scrubbers, you must measure the pH, pressure drop, and liquid flowrate of the wet scrubber during the performance test and calculate the average value for each test run. The minimum test run average establishes your site-specific pH, pressure drop, and liquid flowrate operating limits for the wet scrubber. Furthermore, the fabric filter must be operated such that

the bag leak detection system alarm does not sound more than 5 percent of the operating time during any 6-month period unless a CEMS is installed to measure PM.

(5) For boilers and process heaters with electrostatic precipitators (ESP) in combination with wet scrubbers, you must measure the pH, pressure drop, and liquid flow rate of the wet scrubber during the HCl performance test and you must measure the voltage and current of the ESP collection fields during the mercury and PM performance test. You would then be required to calculate the average value of these parameters for each test run. The average of the three test run averages would establish your site-specific minimum pH, pressure drop, and liquid flowrate operating limit for the wet scrubber and the minimum voltage and current operating limits for the ESP.

(6) For boilers and process heaters that choose to demonstrate compliance with the mercury emission limit on the basis of fuel analysis, you would be required to measure the mercury content of the inlet fuel that was burned during the mercury performance test. This value is your maximum fuel inlet mercury operating limit.

(7) For boilers and process heaters that choose to demonstrate compliance with the HCl emission limit on the basis of fuel analysis, you would be required to measure the chlorine content of the inlet fuel that was burned during the HCl performance test. This value is your maximum fuel inlet chlorine operating limit.

These proposed operating limits would not apply to owners or operators of boilers or process heaters having a heat input capacity of less than 10 million Btu per hour (MMBtu/h) or boilers or process heaters of any size which combust natural gas or refinery gas, as discussed in section IV.D.3 of this preamble. Instead, we are proposing that owners or operators of such boilers and process heaters submit to the delegated authority or EPA, as appropriate, if requested, documentation that a tune-up meeting the requirements of the proposed rule was conducted. We are proposing that, to comply with the work practice standard, a tune-up procedure include the following:

(1) Inspect the burner, and clean or replace any components of the burner as necessary,

(2) Inspect the flame pattern and make any adjustments to the burner necessary to optimize the flame pattern consistent with the manufacturer's specifications,

(3) Inspect the system controlling the air-to-fuel ratio, and ensure that it is correctly calibrated and functioning properly,

(4) Minimize total emissions of CO consistent with the manufacturer's specifications,

(5) Measure the concentration in the effluent stream of CO in ppmvd, before and after the adjustments are made,

(6) Submit an annual report containing the concentrations of CO in the effluent stream in ppmvd, and oxygen in percent dry basis, measured before and after the adjustments of the boiler, a description of any corrective actions taken as a part of the combustion adjustment, and the type and amount of fuel used over the 12 months prior to the annual adjustment.

Further, all owners or operators of major source facilities having boilers and process heaters subject to this rule would be required to submit to the delegated authority or EPA, as appropriate, documentation that an energy assessment was performed, by qualified personnel, and the cost-effective energy conservation measures indentified. The procedures for an energy assessment are:

(1) Conduct a visual inspection of the boiler system.

(2) Establish operating characteristics of the facility, energy system specifications, operating and maintenance procedures, and unusual operating constraints,

(3) Identify major energy consuming systems,

(4) Review available architectural and engineering plans, facility operation and maintenance procedures and logs, and fuel usage,

(5) Identify a list of major energy conservation measures,

(6) Determine the energy savings potential of the energy conservation measures identified, and

(7) Prepare a comprehensive report detailing the ways to improve efficiency, the cost of specific improvements, benefits, and the time frame for recouping those investments.

G. What are the continuous compliance requirements?

To demonstrate continuous compliance with the emission limitations, we are proposing following requirements:

(1) For units combusting coal, biomass, or residual fuel oil (*i.e.,* No 4, 5 or 6 fuel oil) with heat input capacities of less than 250 million Btu per hour that do not use a wet scrubber, we are proposing that opacity levels be maintained to less than 10 percent (daily average) for existing and new units with applicable emission limits. Or, if the unit is controlled with a fabric filter, instead of continuous monitoring of opacity, the fabric filter must be continuously operated such that the bag leak detection system alarm does not sound more than 5 percent of the operating time during any 6-month period (unless a PM CEMS is used).

(2) For units combusting coal, biomass, or residual oil with heat input capacities of 250 million Btu per hour or greater, we are proposing that PM CEMS be installed and operated and that PM levels (monthly average) be maintained below the applicable PM limit.

(3) For boilers and process heaters with wet scrubbers, we are proposing that you monitor pressure drop and liquid flow rate of the scrubber and maintain the 12-hour block averages at or above the operating limits established during the performance test. You must monitor the pH of the scrubber and maintain the 12-hour block average at or above the operating limit established during the performance test to demonstrate continuous compliance with the HCl emission limits.

(4) For boilers and process heaters with dry scrubbers, we are proposing that you continuously monitor the sorbent injection rate and maintain it at or above the operating limits established during the performance tests.

(5) For boilers and process heaters having heat input capacities of less than 250 million Btu per hour with an ESP in combination with a wet scrubber, we are proposing that you monitor the pH, pressure drop, and liquid flow rate of the wet scrubber and maintain the 12-hour block averages at or above the operating limits established during the HCl performance test and that you monitor the voltage and current of the ESP collection plates and maintain the 12-hour block averages at or above the operating limits established during the mercury or PM performance test.

(6) For units that choose to comply with either the mercury emission limit or the HCl emission limit based on fuel analysis rather than on performance stack testing, we are proposing that you maintain daily fuel records that demonstrate that you burned no new fuels or fuels from a new supplier such that the mercury content or the chlorine content of the inlet fuel was maintained at or below your maximum fuel mercury content operating limit or your chlorine content operating limit set during the performance stack tests. If you plan to burn a new fuel, a fuel from a new mixture, or a new supplier's fuel that differs from what was burned during the initial performance tests, then you must

recalculate the maximum mercury input and/or the maximum chlorine input anticipated from the new fuels based on supplier data or own fuel analysis, using the methodology specified in Table 6 of this proposed rule. If the results of recalculating the inputs exceed the average content levels established during the initial test then, you must conduct a new performance test(s) to demonstrate continuous compliance with the applicable emission limit.

(7) For all boilers and process heaters, we are proposing that you maintain daily records of fuel use that demonstrate that you have burned no materials that are considered solid waste.

(8) For boilers and process heaters in any of the subcategories with heat input capacities greater than 100 MMBtu/h, we are proposing that you continuously monitor CO and maintain the average CO emissions at or below the applicable limit listed in Tables 1 or 2 of this proposed rule.

If an owner or operator would like to use a control device other than the ones specified in this section to comply with this proposed rule, the owner/operator should follow the requirements in 40 CFR 63.8(f), which presents the procedure for submitting a request to the Administrator to use alternative monitoring.

H. What are the notification, recordkeeping and reporting requirements?

All new and existing sources would be required to comply with certain requirements of the General Provisions (40 CFR part 63, subpart A), which are identified in Table 10 of this proposed rule. The General Provisions include specific requirements for notifications, recordkeeping, and reporting.

Each owner or operator would be required to submit a notification of compliance status report, as required by § 63.9(h) of the General Provisions. This proposed rule would require the owner or operator to include in the notification of compliance status report certifications of compliance with rule requirements.

Semiannual compliance reports, as required by § 63.10(e)(3) of subpart A, would be required only for semiannual reporting periods when a deviation from any of the requirements in the rule occurred, or any process changes occurred and compliance certifications were reevaluated.

This proposed rule would require records to demonstrate compliance with each emission limit and work practice standard. These recordkeeping requirements are specified directly in the General Provisions to 40 CFR part 63, and are identified in Table 10. Owners or operators of sources with units with heat input capacity of less than 10 MMBtu/h or units combusting natural gas or refinery gas must keep records of the dates and the results of each required boiler tune-up.

Records of either continuously monitored parameter data for a control device if a device is used to control the emissions or CEMS data would be required.

We are proposing that you must keep the following records:

(1) All reports and notifications submitted to comply with this proposed rule.

(2) Continuous monitoring data as required in this proposed rule.

(3) Each instance in which you did not meet each emission limit and each operating limit (i.e., deviations from this proposed rule).

(4) Daily hours of operation by each source.

(5) Total fuel use by each affected source electing to comply with an emission limit based on fuel analysis for each 30-day period along with a description of the fuel, the total fuel usage amounts and units of measure, and information on the supplier and original source of the fuel.

(6) Calculations and supporting information of chlorine fuel input, as required in this proposed rule, for each affected source with an applicable HCl emission limit.

(7) Calculations and supporting information of mercury fuel input, as required in this proposed rule, for each affected source with an applicable mercury emission limit.

(8) A signed statement, as required in this proposed rule, indicating that you burned no new fuel type and no new fuel mixture or that the recalculation of chlorine input demonstrated that the new fuel or new mixture still meets chlorine fuel input levels, for each affected source with an applicable HCl emission limit.

(9) A signed statement, as required in this proposed rule, indicating that you burned no new fuels and no new fuel mixture or that the recalculation of mercury fuel input demonstrated that the new fuel or new fuel mixture still meets the mercury fuel input levels, for each affected source with an applicable mercury emission limit.

(10) A copy of the results of all performance tests, fuel analysis, opacity observations, performance evaluations, or other compliance demonstrations conducted to demonstrate initial or continuous compliance with this proposed rule.

(11) A copy of your site-specific monitoring plan developed for this proposed rule as specified in 63 CFR 63.8(e), if applicable.

We are also proposing to require that you submit the following reports and notifications:

(1) Notifications required by the General Provisions.

(2) Initial Notification no later than 120 calendar days after you become subject to this subpart.

(3) Notification of Intent to conduct performance tests and/or compliance demonstration at least 60 calendar days before the performance test and/or compliance demonstration is scheduled.

(4) Notification of Compliance Status 60 calendar days following completion of the performance test and/or compliance demonstration.

(5) Compliance reports semi-annually.

I. Submission of Emissions Test Results to EPA

The EPA must have performance test data to conduct effective reviews of CAA Section 112 and 129 standards, as well as for many other purposes including compliance determinations, emissions factor development, and annual emissions rate determinations. In conducting these required reviews, we have found it ineffective and time consuming not only for us but also for regulatory agencies and source owners and operators to locate, collect, and submit emissions test data because of varied locations for data storage and varied data storage methods. One improvement that has occurred in recent years is the availability of stack test reports in electronic format as a replacement for cumbersome paper copies.

In this action, we are taking a step to improve data accessibility. Owners and operators of boilers and process heaters will be required to submit to an EPA electronic database an electronic copy of reports of certain performance tests required under this rule. Data entry will be through an electronic emissions test report structure called the Electronic Reporting Tool (ERT) that will be used by the EPA staff as part of the emissions testing project. The ERT was developed with input from stack testing companies who generally collect and compile performance test data electronically and offices within State and local agencies which perform field test assessments. The ERT is currently available, and access to direct data submittal to EPA's electronic emissions database (WebFIRE) will become available by December 31, 2011.

The requirement to submit source test data electronically to EPA will not

require any additional performance testing and will apply to those performance tests conducted using test methods that are supported by ERT. The ERT contains a specific electronic data entry form for most of the commonly used EPA reference methods. The Web site listed at the end of this section contains a listing of the pollutants and test methods supported by ERT. In addition, when a facility submits performance test data to WebFIRE, there will be no additional requirements for emissions test data compilation. Moreover, we believe industry will benefit from development of improved emissions factors, fewer follow-up information requests, and better regulation development as discussed below. The information to be reported is already required for the existing test methods and is necessary to evaluate the conformance to the test method.

One major advantage of submitting source test data through the ERT is that it provides a standardized method to compile and store much of the documentation required to be reported by this rule while clearly stating what testing information we require. Another important benefit of submitting these data to EPA at the time the source test is conducted is that it will substantially reduce the effort involved in data collection activities in the future. Specifically, because EPA would already have adequate source category data to conduct residual risk assessments or technology reviews, there would be fewer or less substantial data collection requests (*e.g.,* CAA Section 114 letters). This results in a reduced burden on both affected facilities (in terms of reduced manpower to respond to data collection requests) and EPA (in terms of preparing and distributing data collection requests).

State/local/Tribal agencies may also benefit in that their review may be more streamlined and accurate as the States will not have to re-enter the data to assess the calculations and verify the data entry. Finally, another benefit of submitting these data to WebFIRE electronically is that these data will improve greatly the overall quality of the existing and new emissions factors by supplementing the pool of emissions test data upon which the emissions factor is based and by ensuring that data are more representative of current industry operational procedures. A common complaint we hear from industry and regulators is that emissions factors are outdated or not representative of a particular source category. Receiving and incorporating data for most performance tests will ensure that emissions factors, when updated, represent accurately the most current operational practices. In summary, receiving test data already collected for other purposes and using them in the emissions factors development program will save industry, State/local/Tribal agencies, and EPA time and money and work to improve the quality of emissions inventories and related regulatory decisions.

As mentioned earlier, the electronic data base that will be used is EPA's WebFIRE, which is a Web site accessible through EPA's Technology Transfer Network (TTN). The WebFIRE Web site was constructed to store emissions test data for use in developing emissions factors. A description of the WebFIRE data base can be found at *http://cfpub.epa.gov/oarweb/index.cfm?action=fire.main.*

The ERT will be able to transmit the electronic report through EPA's Central Data Exchange (CDX) network for storage in the WebFIRE data base. Although ERT is not the only electronic interface that can be used to submit source test data to the CDX for entry into WebFIRE, it makes submittal of data very straightforward and easy. A description of the ERT can be found at *http://www.epa.gov/ttn/chief/ert/ert_tool.html.*

IV. Rationale for This Proposed Rule

A. How did EPA determine which sources would be regulated under this proposed rule?

This proposed rule regulates source categories covering industrial boilers, institutional and commercial boilers, and process heaters. These source categories potentially include combustion units that are already regulated by other MACT standards under CAA sections 112 or 129. Therefore, we are excluding from this proposed rule any units that are subject to regulation in another MACT standard established under CAA section 112 or a standard established under CAA section 129.

The CAA specifically requires that fossil fuel-fired steam generating units of more than 25 megawatts that produce electricity for sale (*i.e.,* utility boilers) be reviewed separately by EPA. Consequently, this proposed rule would not regulate fossil fuel-fired utility boilers greater than 25 megawatts, but would regulate fossil fuel-fired units less than 25 megawatts and all utility boilers firing a non-fossil fuel that is not a solid waste.

The scope of the process heater source category is limited to only indirect-fired units.[3] Direct-fired units are covered in other MACT standards or rulemakings pertaining to industrial process operations. For example, lime kilns are covered by the Pulp and Paper NESHAP (40 CFR part 63, subpart S). Indirect-fired process heaters are similar to boilers in fuel use, emissions, and applicable controls, and, therefore, it is appropriate for EPA to combine this listed source category of units with the listed source categories of industrial boilers and commercial/institutional boilers for purposes of developing emission standards.

The proposed rule would not regulate hot water heaters, as defined in this proposed rule, because such units are not part of the listed source categories. Many industrial facilities have office buildings located onsite which use hot water heaters. Such hot water heaters, by their design and operation, could be considered boilers since hot water heaters meet the definition of a boiler as specified in the proposed rule, because they are enclosed devices that combust fuel for the purpose of recovery energy to heat water. However, hot water heaters are more appropriately described as residential-type boilers, not industrial, commercial, or institutional boilers because their output (*i.e.,* hot water) is intended for personal use rather than for use in an industrial, commercial, or institutional process. Moreover, since hot water heaters generally are small and use natural gas as fuel, their emissions are negligible compared to the emissions from the industrial operations that make such facilities major sources, and compared to boilers that are used for industrial, commercial, or institutional purposes. However, the primary reason that we are excluding hot water heaters is that hot water heaters are not part of the listed source category. Consequently, we are including a definition of hot water heaters that includes fuel, size, pressure and temperature limitations that we believe are appropriate to distinguish between residential-type units and industrial, commercial, or institutional units.

The CAA allows EPA to divide source categories into subcategories based on differences in class, type, or size. For example, differences between given types of units can lead to corresponding differences in the nature of emissions and the technical feasibility of applying emission control techniques. The design, operating, and emissions information that EPA has reviewed

[3] Indirect-fired process heaters are combustion devices in which the combustion gases do not directly come into contact with process materials.

indicates differences in unit design that distinguish different types of boilers. Data indicate that there are significant design and operational differences between units that burn coal, biomass, liquid, and gaseous fuels.

Boiler systems are designed for specific fuel types and will encounter problems if a fuel with characteristics other than those originally specified is fired. While many boilers in the population data base are indicated to co-fire liquids or gases with solid fuels, in actuality most of these commonly use fuel oil or natural gas as a startup fuel only, and operate on solid fuel during the remainder of their operation. In contrast, some co-fired units are specifically designed to fire combinations of solids, liquids, and gases. Changes to the fuel type would generally require extensive changes to the fuel handling and feeding system (*e.g.,* a stoker using wood as fuel would need to be redesigned to handle fuel oil or gaseous fuel). Additionally, the burners and combustion chamber would need to be redesigned and modified to handle different fuel types and account for increases or decreases in the fuel volume. In some cases, the changes may reduce the capacity and efficiency of the boiler or process heater. An additional effect of these changes would be extensive retrofitting needed to operate using a different fuel.

The design of the boiler or process heater, which is dependent in part on the type of fuel being burned, impacts the degree of combustion. Boilers and process heaters emit a number of different types of HAP emissions. Organic HAP are formed from incomplete combustion and are influenced by the design and operation of the unit. The degree of combustion may be greatly influenced by three general factors: Time, turbulence, and temperature. On the other hand, the formation of fuel-dependent HAP (metals, mercury, and acid gases) is dependent upon the composition of the fuel. These fuel-dependent HAP emissions generally can be controlled by either changing the fuel property before combustion or by removing the HAP from the flue gas after combustion.

We first examined the HAP emissions results to determine if subcategorization by unit design type was warranted. We concluded that the data were sufficient for determining that a distinguishable difference in performance exists based on unit design type. Therefore, because different types of units have different emission characteristics which may influence the feasibility of effectiveness of emission control, they should be regulated separately (*i.e.,* subcategorized). Accordingly, we propose to subcategorize boilers and process heaters based on unit design in order to account for these differences in emissions and applicable controls.

For the fuel-dependent HAP (metals, mercury, acid gases), we identified five basic unit types as subcategories. These are the following: (1) Units designed to burn coal, (2) units designed to burn biomass, (3) units designed to burn liquid fuel, (4) units designed to burn natural gas/refinery gas, and (5) units designed to burn other process gases. Within the basic unit types there are different designs and combustion systems that, while having a minor effect on fuel-related HAP emissions, have a much larger effect on organic HAP emissions. Therefore, we decided to further subcategorize based on these different unit designs but only in proposing standards for organic HAP emissions. We have identified the following 11 subcategories for organic HAP:

Pulverized coal units,
Stokers designed to burn coal,
Fluidized bed units designed to burn coal,
Stokers designed to burn biomass,
Fluidized bed units designed to burn biomass,
Suspension burners/Dutch Ovens designed to burn biomass,
Fuel Cells designed to burn biomass,
Units designed to burn liquid fuel,
Units designed to burn natural gas/refinery gas,
Units designed to burn other gases, and
Metal process furnaces.

These subcategories are based on the primary fuel that the boiler or process heater is designed to burn. We are aware that some boilers burn a combination of fuel types or burn a different fuel type as a backup fuel if the primary fuel supply is curtailed. However, boilers are designed based on the primary fuel type (and perhaps to burn a backup fuel) and can encounter operational problems if another fuel type that was not considered in its design is fired at more than 10 percent of the heat input to the boiler. Also, in some cases, a small amount of coal may be added to a biomass designed boiler to stabilize the combustion when the biomass has a higher moisture content than normal. In this case, it would not be appropriate to classify the boiler as being in one of the "coal" subcategories because the boiler design is such that it is constructed and operated to combust biomass, and could not combust primarily coal (without significant retrofitting or design changes). Therefore, we are proposing to define boilers and process heaters that burn at least 10 percent coal (on an annual heat input basis) as being in one of the coal subcategories. We are also proposing to define boilers and process heaters that burn at least 10 percent biomass, and less than 10 percent coal (on an annual heat input basis) as being in one of the biomass subcategories. We are proposing to define boilers and process heaters that burn at least 10 percent liquid fuel, and less than 10 percent solid fuel (on an annual heat input basis) as being in the liquid subcategory. We are proposing to define boilers and process heaters that burn at least 90 percent natural gas and/or refinery gas (on an annual heat input basis) as being in the Gas 1 subcategory. This would ensure that each boiler and process heater is subject to emissions standards calculated on the basis of the best performing units with similar design and operation. The remaining boilers and process heaters, except for those described below would be in the Gas 2 subcategory.

In addition, there is a certain class of natural gas-fired process heaters that are designed and operated differently compared to typical process heaters. A review of information gathered on process heaters used in the metal processing industries shows that these process heaters typically are designed with multiple burners that fire into individual combustion chambers. These individual burners are operated to cycle on and off to maintain the proper temperatures throughout the various zones of the process heater. Thus, due to their design, these process heaters rarely operate in a steady-state condition due to burners constantly starting up and shutting down. This results in emissions characteristics different from the process heaters used in other industries. The process heaters used in metal processing are natural gas-fired and include annealing furnaces, preheat furnaces, reheat furnaces, aging furnaces, and heat treat furnaces. Therefore, we propose to identify these metal processing process heaters (furnaces) as a separate eleventh subcategory.

In summary, we have identified 11 subcategories of boilers and process heaters located at major sources.[4]

B. How did EPA select the format for this proposed rule?

This proposed rule includes numerical emission limits for PM, mercury, HCl, CO, and D/F. The selection of numerical emission limits as the format for this proposed rule

[4] *See* Memorandum "Development of Baseline Emission Factors for Boilers and Process Heaters at Commercial, Industrial, and Institutional Facilities" located in the docket.

provides flexibility for the regulated community by allowing a regulated source to choose any control technology or technique to meet the emission limits, rather than requiring each unit to use a prescribed control method that may not be appropriate in each case.

We are proposing numerical emission rate limits as a mass of pollutant emitted per heat energy input to the boiler or process heater for the fuel-related HAP. The most typical units for the limits are pounds of pollutant emitted per million Btu of heat input. The mass per heat input units are consistent with other Federal and many State boiler regulations [5] and allows easy comparison between such requirements. Additionally, this proposed rule contains an option to monitor inlet chlorine and mercury content in the fuel to meet outlet emission rate limits. This option can only be done on a mass basis.

We are proposing outlet concentration as the format for the organic HAP. An outlet concentration limit for organic HAP would also be consistent with the format of other regulations.

Boilers and process heaters can emit a wide variety of compounds, depending on the fuel burned. Because of the large number of HAP potentially present and the disparity in the quantity and quality of the emissions information available, EPA grouped the HAP into five categories: Mercury, non-mercury metallic HAP, inorganic HAP, non-dioxin organic HAP, and D/F. The pollutants within each group have similar characteristics and can be controlled with the same techniques. For example, non-mercury metallic HAP can be controlled with PM controls. We chose to look at mercury separately from other metallic HAP due to its different chemical characteristics and its different control technology feasibility.

Next, EPA identified compounds that could be used as surrogates for all the compounds in each pollutant category. For the non-mercury metallic HAP, we chose to use PM as a surrogate. Most, if not all, non-mercury metallic HAP emitted from combustion sources will appear on the flue gas fly-ash. Therefore, the same control techniques that would be used to control the fly-ash PM will control non-mercury metallic HAP. PM was also chosen instead of specific metallic HAP because all fuels do not emit the same type and amount of metallic HAP but most generally emit PM that includes some amount and combination of metallic HAP. The use of PM as a surrogate will also eliminate the cost of performance testing to comply with numerous standards for individual non-mercury metals. Since non-mercury metallic HAP tend to be on small size particles (i.e., fine particle enrichment), we considered using $PM_{2.5}$ as the surrogate, but we determined that PM (filterable) was the more appropriate surrogate for two reasons. First, the test method (OTM 27) for measuring $PM_{2.5}$ is only applicable for use in exhaust stacks without entrained water droplets. Therefore, the test method (OTM 27) for measuring $PM_{2.5}$ is not applicable for units equipped with wet scrubbers which will likely be necessary to achieve the proposed HCl emission limits. Second, based on the emission data obtained during EPA's information collection effort from units not equipped with wet scrubbers, the majority of the filterable PM emitted from units that are well controlled for PM is fine particulate ($PM_{2.5}$). Thus, we are proposing to use PM (filterable), instead of $PM_{2.5}$, as the surrogate for non-mercury metals.

For non-metallic inorganic HAP, EPA is proposing using HCl as a surrogate. The emissions test information available to EPA indicate that the primary non-metallic inorganic HAP emitted from boilers and process heaters are acid gases, with HCl present in the largest amounts. Other inorganic compounds emitted are found in much smaller quantities. Control technologies that reduce HCl also control other inorganic compounds such as chlorine and other acid gases. Thus, the best controls for HCl would also be the best controls for other inorganic HAP that are acid gases. Therefore, HCl is a good surrogate for inorganic HAP because controlling HCl will result in control of other inorganic HAP emissions.

For organic HAP, we considered both THC and CO as a surrogate for non-dioxin organic HAP emitted from boilers and process heaters. CO has generally been used as a surrogate for organic HAP because CO is a good indicator of incomplete combustion and organic HAP are products of incomplete combustion. However, based on concerns that CO may not be an appropriate surrogate for D/F because, unlike other organic HAP, D/F can be formed outside the combustion unit, we are proposing to use CO as a surrogate for non-dioxin organic HAP. We are also proposing separate emission limits for D/F. For non-dioxin organic HAP, using CO as a surrogate is a reasonable approach because minimizing CO emissions will result in minimizing non-dioxin organic HAP. Methods used for the control of non-dioxin organic HAP emissions would be the same methods used to control CO emissions. These emission control methods include achieving good combustion or using an oxidation catalyst. Standards limiting emissions of CO will also result in decreases in non-dioxin organic HAP emissions (with the additional benefit of decreasing volatile organic compounds (VOC) emissions). Establishing emission limits for specific organic HAP (with the exception of D/F) would be impractical and costly. CO, which is less expensive to test for and monitor, is appropriate for use as a surrogate for non-dioxin organic HAP.

The Agency recognizes that the level and distribution of organic HAP associated with CO emissions will vary from unit to unit. For example, the principal organic HAP emitted from coal-fired units is benzene, which accounts for about 20 percent of the organic HAP while the principal organic HAP emitted from biomass-fired units is formaldehyde, which accounts for 34 percent of the organic HAP.[6] Limiting CO as a surrogate for only non-dioxin organic HAP will eliminate costs associated with speciating numerous compounds. The proposed standards establish separate emission limits for D/F because of the high toxicity associated with even low masses of these compounds.

THC could also be an appropriate surrogate for non-dioxin organic HAP because low THC also ensures good combustion efficiency and, thus, low organic HAP. However, we believe CO is preferable because many sources currently have CO CEMS. In addition, there are more CO emission data available for the various subcategories than THC emission data.

C. How did EPA determine the proposed emission limitations for existing units?

All standards established pursuant to CAA section 112(d)(2) must reflect MACT, the maximum degree of reduction in emissions of air pollutants that the Administrator, taking into consideration the cost of achieving such emissions reductions, and any nonair quality health and environmental impacts and energy requirements, determined is achievable for each category. For existing sources, MACT cannot be less stringent than the average emission limitation achieved by the best performing 12 percent of existing

[5] For example, the new source performance standards for industrial, commercial, and institutional steam generating units (40 CFR subpart Db) have emission limits for sulfur dioxide, nitrogen oxide, and PM in terms of pounds per million Btu.

[6] Based on emission factors reported on EPA webpage "AP 42, Fifth Edition, Volume 1—Chapter 1: External Combustion Sources" located at *http://www.epa.gov/ttn/chief/ap42/ch01/index.html.*

sources for categories and subcategories with 30 or more sources or the best performing 5 sources for subcategories with less than 30 sources. This requirement constitutes the MACT floor for existing boilers and process heaters. However, EPA may not consider costs or other impacts in determining the MACT floor. EPA must consider cost, nonair quality health and environmental impacts, and energy requirements in connection with any standards that are more stringent than the MACT floor (beyond-the-floor controls).

D. How did EPA determine the MACT floors for existing units?

EPA must consider available emissions information to determine the MACT floors. For each pollutant, we calculated the MACT floor for a subcategory of sources by ranking all the available emissions data from units within the subcategory from lowest emissions to highest emissions, and then taking the numerical average of the test results from the best performing (lowest emitting) 12 percent of sources.

We first considered whether fuel switching would be an appropriate control option for sources in each subcategory. We considered the feasibility of fuel switching to other fuels used in the subcategory and to fuels from other subcategories. This consideration included determining whether switching fuels would achieve lower HAP emissions. A second consideration was whether fuel switching could be technically achieved by boilers and process heaters in the subcategory considering the existing design of boilers and process heaters. We also considered the availability of various types of fuel.

After considering these factors, we determined that fuel switching was not an appropriate control technology for purposes of determining the MACT floor level of control for any subcategory. This decision was based on the overall effect of fuel switching on HAP emissions, technical and design considerations discussed previously in this preamble, and concerns about fuel availability.

Based on the emission factors reported in EPA's Technology Transfer Network, we determined that while fuel switching from solid fuels to gaseous or liquid fuels would decrease PM and some metals emissions, emissions of some organic HAP (*e,g.,* formaldehyde) would increase.[7] This determination is discussed in the memorandum "Development of Fuel Switching Costs and Emission Reductions for Industrial, Commercial, and Institutional Boilers and Process Heaters National Emission Standards for Hazardous Air Pollutants" located in the docket.

A similar determination was made when considering fuel switching to cleaner fuels within a subcategory. For example, the term "clean coal" refers to coal that is lower in sulfur content and not necessarily lower in HAP content. Data gathered by EPA also indicates that within specific coal types HAP content can vary significantly. Switching to a low sulfur coal may actually increase emissions of some HAP. Therefore, it is not appropriate for EPA to include fuel switching to a low sulfur coal as part of the MACT standards for boilers and process heaters. Fuel switching from coal to biomass would result in similar impacts on HAP emissions. While this would reduce metallic HAP emissions, it would likely increase emissions of organics based on information in the emissions database.

Another factor considered was the availability of alternative fuel types. Natural gas pipelines are not available in all regions of the U.S., and natural gas is simply not available as a fuel for many industrial, commercial, and institutional boilers and process heaters. Moreover, even where pipelines provide access to natural gas, supplies of natural gas may not be adequate. For example, it is common practice in cities during winter months (or periods of peak demand) to prioritize natural gas usage for residential areas before industrial usage. Requiring boilers and process heaters to switch to natural gas would place an even greater strain on natural gas resources. Consequently, even where pipelines exist, some units would not be able to run at normal or full capacity during these times if shortages were to occur. Therefore, under any circumstances, there would be some units that could not comply with a requirement to switch to natural gas.

Similar problems for fuel switching to biomass could arise. Existing sources burning biomass generally are combusting a recovered material from the manufacturing or agriculture process. Industrial, commercial, and institutional facilities that are not associated with the wood products industry or agriculture may not have access to a sufficient supply of biomass materials to replace their fossil fuel.

As discussed previously in this preamble, there is a significant concern that switching fuels would be infeasible for sources designed and operated to burn specific fuel types. Changes in the type of fuel burned by a boiler or process heater (solid, liquid, or gas) may require extensive changes to the fuel handling and feeding system (*e.g.,* a stoker using wood as fuel would need to be redesigned to handle fuel oil or gaseous fuel). Additionally, burners and combustion chamber designs are generally not capable of handling different fuel types, and generally cannot accommodate increases or decreases in the fuel volume. Design changes to allow different fuel use, in some cases, may reduce the capacity and efficiency of the boiler or process heater. Reduced efficiency may result in less complete combustion and, thus, an increase in organic HAP emissions. For the reasons discussed above, we decided that fuel switching to cleaner solid fuels or to liquid or gaseous fuels is not an appropriate criteria for identifying the MACT floor emission levels for units in the boilers and process heaters category.

Therefore, the MACT floor limits for each of the HAP and HAP surrogates (PM, mercury, CO, HCl, and D/F) are calculated based on the performance of the lowest emitting (best performing) sources in each of the subcategories. We ranked all of the sources for which we had data based on their emissions and identified the lowest emitting 12 percent of the sources for each HAP.

We used the emissions data for those best performing affected sources to determine the emission limits to be proposed, with an accounting for variability. EPA must exercise its judgment, based on an evaluation of the relevant factors and available data, to determine the level of emissions control that has been achieved by the best performing sources under variable conditions. The DC Circuit Court of Appeals has recognized that EPA may consider variability in estimating the degree of emission reduction achieved by best-performing sources and in setting MACT floors. *See Mossville Envt'l Action Now* v. *EPA,* 370 F.3d 1232, 1241–42 (DC Cir 2004) (holding EPA may consider emission variability in estimating performance achieved by best-performing sources and may set the floor at level that best-performing source can expect to meet "every day and under all operating conditions").

In determining the MACT floor limits, we first determine the floor, which is the level achieved in practice by the average of the top 12 percent. We then assess variability of the best performers by using a statistical formula designed to estimate a MACT floor level that is achievable by the average of the best performing sources if the best performing sources were able to replicate the compliance tests in our

[7] *See* EPA webpage "AP 42, Fifth Edition, Volume 1—Chapter 1: External Combustion Sources" located at *http://www.epa.gov/ttn/chief/ap42/ch01/index.html.*

data base. Specifically, the MACT floor limit is an upper prediction limit (UPL) calculated with the Student's t-test using the TINV function in Microsoft Excel. The Student's t-test has also been used in other EPA rulemakings (*e.g.,* NSPS for Hospital/Medical/Infectious Waste Incinerators) in accounting for variability. A prediction interval for a future observation is an interval that will, with a specified degree of confidence, contain the next (or some other pre-specified) randomly selected observation from a population. In other words, the prediction interval estimates what future values will be, based upon present or past background samples taken. Given this definition, the UPL represents the value which we can expect the mean of 3 future observations (3-run average) to fall below, based upon the results of an independent sample from the same population. In other words, if we were to randomly select a future test condition from any of these sources (*i.e.,* average of 3 runs), we can be 99% confident that the reported level will fall at or below the UPL value. To calculate the UPL, we used the average (or sample mean) and sample standard deviation, which are two statistical measures calculated from the sample data. The average is the central value of a data set, and the standard deviation is the common measure of the dispersion of the data set around the average.

We first determined the distribution of the emissions data for the best-performing 12 percent of units within each subcategory prior to calculating UPL values. To evaluate the distribution of the best performing dataset, we first computed the skewness and kurtosis statistics and then conducted the appropriate small-sample hypothesis tests.

The skewness statistic (S) characterizes the degree of asymmetry of a given data distribution. Normally distributed data have a skewness of 0. A skewness statistic that is greater (less) than 0 indicates that the data are asymmetrically distributed with a right (left) tail extending towards positive (negative) values. Further, the standard error of the skewness statistic (SES) is given by SES = SQRT(6/N) where N is the sample size. According to the small sample skewness hypothesis test, if the skewness statistic (S) is greater than two times the SES, the data distribution can be considered non-normal.

The kurtosis statistic (K) characterizes the degree of peakedness or flatness of a given data distribution in comparison to a normal distribution. Normally distributed data have a kurtosis of 0. A kurtosis statistic that is greater (less) than 0 indicates a relatively peaked (flat) distribution. Further, the standard error of the kurtosis statistic (SEK) is given by SEK = SQRT(24/N) where N is the sample size. According to the small sample kurtosis hypothesis test, if the kurtosis statistic (K) is greater than two times the SEK, the data distribution is typically considered to be non-normal.

We applied the skewness and kurtosis hypothesis tests to both the reported test values and the lognormal values of the reported test values. If the skewness (S) and kurtosis (K) statistics of the reported data set were both less than twice the SES and SEK, respectively, the dataset was classified as normally distributed. If neither of the skewness (S) and kurtosis (K) statistics, or only one of these statistics were less than twice the SES or SEK, respectively, then the skewness and kurtosis hypothesis tests were conducted for the natural log-transformed data. Then the distribution most similar to a normal distribution was selected as the basis for calculating the UPL. If both the reported values and the natural-log transformed reported values had skewness (S) and kurtosis (K) statistics that were greater than twice the SES or SEK, respectively, the normally distributed dataset was selected as the basis of the floor to be conservative. If the results of the skewness and kurtosis hypothesis tests were mixed for the reported values and the natural log-transformed reported values, we also chose the normal distribution to be conservative. We believe this approach is more accurate and obtained more representative results than a more simplistic normal distribution assumption.

Since the compliance with the MACT floor emission limit is based on the average of a three run test, the UPL is calculated by:

$$UPL = \bar{x} + t(0.99, n-1) \times \sqrt{s^2 \times \left(\frac{1}{n} + \frac{1}{m}\right)}$$

Where:

n = the number of test runs

m = the number of test runs in the compliance average

This calculation was performed using the following two Excel functions:

Normal distribution: 99% UPL = AVERAGE(Test Runs in Top 12%) + [STDEV(Test Runs in Top 12%) × TINV(2 × probability, n-1 degrees of freedom)*SQRT((1/n)+(⅓))], for a one-tailed t-value (with 2 × probability), probability of 0.01, and sample size of n

Lognormal distribution: 99% UPL = EXP{AVERAGE(Natural Log Values of Test Runs in Top 12%) + [STDEV(Natural Log Values of Test Runs in Top 12%) × TINV(2 × probability, n-1 degrees of freedom)* SQRT((1/n)+(⅓))]}, for a one-tailed t-value (with 2 × probability), probability of 0.01, and sample size of n

Test method measurement imprecision can also be a component of data variability. At very low emissions levels as encountered in the data used to support this rule, the inherent imprecision in the pollutant measurement method has a large influence on the reliability of the data underlying the regulatory floor or beyond-the-floor emissions limit. Of particular concern are those data that are reported near or below a test method's pollutant detection capability. In our guidance for reporting pollutant emissions used to support this rule, we specified the criteria for determining test-specific method detection levels. Those criteria insure that there is about a 1 percent probability of an error in deciding that the pollutant measured at the method detection level is present when in fact it was absent. Such a probability is also called a false positive or the alpha, Type I, error. Another view of this probability is that one is 99 percent certain of the presence of the pollutant measured at the method detection level. Because of matrix effects, laboratory techniques, sample size, and other factors, method detection levels normally vary from test to test. We requested sources to identify (i.e., flag) data which were measured below the method detection level and to report those values as equal to the test-specific method detection level.

Variability of data due to measurement imprecision is inherently and reasonably addressed in calculating the floor emissions limit when the data base represents multiple tests for which all of the data are measured significantly above the method detection level. That is less true when the data base includes emissions occurring below method detection capabilities and are reported as the method detection level values. The data base is then truncated at the lower end of the measurement range (i.e., no values reported below the method detection level) and we believe that a floor emissions limit based on a truncated data base or otherwise including values at or near the method detection level may not adequately account for data measurement variability. We did not adjust the calculated floor for the data used for this proposal; although, we believe that accounting for measurement imprecision should be an important

consideration in calculating the floor emissions limit. We request comment on approaches suitable to account for measurement variability in establishing the floor emissions limit when based on measurements at or near the method detection level.

As noted above, the confidence level that a value measured at the detection level is greater than zero is about 99 percent. The expected measurement imprecision for an emissions value occurring at or near the method detection level is about 40 to 50 percent. Pollutant measurement imprecision decreases to a consistent relative 10 to 15 percent for values measured at a level about three times the method detection level.[8] One approach that we believe could be applied to account for measurement variability would require defining a method detection level that is representative of the data used in establishing the floor emissions limits and also minimizes the influence of an outlier test-specific method detection level value. The first step in this approach would be to identify the highest test-specific method detection level reported in a data set that is also equal to or less than the floor emissions limit calculated for the data set. This approach has the advantage of relying on the data collected to develop the floor emissions limit while to some degree minimizing the effect of a test(s) with an inordinately high method detection level (*e.g.,* the sample volume was too small, the laboratory technique was insufficiently sensitive, or the procedure for determining the detection level was other than that specified).

The second step would be to determine the value equal to three times the representative method detection level and compare it to the calculated floor emissions limit. If three times the representative method detection level were less than the calculated floor emissions limit, we would conclude that measurement variability is adequately addressed and we would not adjust the calculated floor emissions limit. If, on the other hand, the value equal to three times the representative method detection level were greater than the calculated floor emissions limit, we would conclude that the calculated floor emissions limit does not account entirely for measurement variability. We then would use the value equal to three times the method detection level in place of the calculated floor emissions limit to ensure that the floor emissions limit accounts for measurement variability. We request comment on this approach.

We are requesting comment on whether there is a more appropriate statistical approach to account for variability in the MACT floor analyses when there are emission data from a limited number of units in the subcategory.

However, after review of the available HAP data, including both emission test data and fuel analyses, we determined that it was inappropriate to use only this MACT floor approach to determine variability and to establish emission limits for boilers and process heaters, because this approach considers only the emissions test data. The main problem with using only the HAP emissions test data is that the data, which may reflect the variability of fuel-related HAP of the best performing units, may not reflect the variability of fuel-related HAP from the best performing units over the long term. Based on fuel-related HAP concentrations (nine individual samples collected over a 30-day period) obtained, pursuant to letters mandating data gathering issued under the authority of CAA section 114, fuel-related HAP levels in the various fuels can vary significantly over time.

The first step in establishing a MACT standard is to determine the MACT floor. A necessary step in doing so is determining the amount of HAP emitted. In the case of fuel-related HAP emitted, this is not necessarily a straightforward undertaking. Single stack measurements represent a snapshot in time of a source's emissions, always raising questions of how representative such emissions are of the source's emissions over time. The variations in fuel-related HAP inputs directly translate to a variability of fuel-related HAP stack emissions.

We believe that single short term stack test data (typically a few hours) are probably not indicative of long term emissions performance, and so are not the best indicators of performance over time. With these facts in mind, we carefully considered alternatives other than use of only single short-term stack test results to quantify performance for fuel-related HAP. We decided that the most accurate method available to us to determine long term fuel-related HAP emissions performance was to use data on the fuel-related HAP inputs in the fuels used by the best performing units, obtained as part of our information collection effort under the authority of CAA section 114, on long-term fuel-related HAP concentrations (nine individual samples collected over a 30-day period) in each fuel, along with the fuel-related HAP concentrations during the stack tests.

As previously discussed above, we account for variability in setting floors, not only because variability is an element of performance, but because it is reasonable to assess best performance over time. Here, for example, we know that the HAP emission data from the best performing units are short-term averages, and that the actual HAP emissions from those sources will vary over time. If we do not account for this variability, we would expect that even the units that perform better than the floor on average would potentially exceed the floor emission levels a significant part of the time which would mean that variability was not properly taken into account. This variability includes the day-to-day variability in the total fuel-related HAP input to each unit and variability of the sampling and analysis methods, and it includes the variability resulting from site-to-site differences for the best performing units. We calculated the MACT floor based on the UPL (upper 99th percentile) as described earlier from the average performance of the best performing units, Students t-factor, and the variability of the best performing units.

This approach reasonably ensures that the emission limit selected as the MACT floor adequately represents the level of emissions actually achieved by the average of the units in the top 12 percent, considering ordinary operational variability of those units. Both the analysis of the measured emissions from units representative of the top 12 percent, and the variability analysis, are reasonably designed to provide a meaningful estimate of the average performance, or central tendency, of the best controlled 12 percent of units in a given subcategory.

A detailed discussion of the MACT floor methodology is presented in the memorandum "MACT Floor Analysis (2010) for the Industrial, Commercial, and Institutional Boilers and Process Heaters National Emission Standards for Hazardous Air Pollutants—Major Source" in the docket.

1. Determination of MACT for the Fuel-Related HAP

In developing the proposed MACT floor for the fuel-related HAP (non-mercury metals, acid gases, and mercury), as described earlier, we are using PM as a surrogate for non-mercury metallic HAP and HCl as a surrogate for the acid gases. Table 2 of this preamble presents the number of units in each of the five subcategories, along with the

[8] American Society of Mechanical Engineers, *Reference Method Accuracy and Precision (ReMAP): Phase 1, Precision of Manual Stack Emission Measurements,* CRTD Vol. 60, February 2001.

number of units from which we have collected emission data. Table 2 also presents for each subcategory and fuel-related HAP the number of units comprising the best performing units (top 12 percent), the average emission level of the top 12 percent, and the MACT floor (99 percent UPL of top 12 percent) which includes the variability across the best performing units and the long term variability across those units.

TABLE 2—SUMMARY OF MACT FLOOR RESULTS FOR THE FUEL-RELATED HAP FOR EXISTING SUBCATEGORIES

Subcategory	Parameter	PM	Mercury	HCl
Units designed for Coal firing	No. of sources in subcategory	578	578	578
	No. of sources with data	366	285	318
	No. in MACT floor	44	35	39
	Avg of top 12%, lb/MMBtu	7.24E–03	5.95E–07	4.23E–03
	99% UPL of top 12% (test runs), lb/MMBtu	0.0179	1.64E–06	7.38E–03
	99% UPL with fuel variability of top 12%, lb/MMBtu.	.....	2.88E–06	1.11E–02
Units designed for Biomass firing	No. of sources in subcategory	420	420	420
	No. of sources with data	192	91	92
	No. in MACT floor	24	11	12
	Avg of top 12%, lb/MMBtu	6.06E–03	3.46E–07	4.34E–03
	99% UPL of top 12% (test runs), lb/MMBtu	0.0162	7.52E–07	6.00E–03
	99% UPL with fuel variability of top 12%, lb/MMBtu.	.....	8.88E–07	.....
Units designed for Liquid Fuel firing	No. of sources in subcategory	826	826	826
	No. of sources with data	91	177	190
	No. in MACT floor	11	22	23
	Avg of top 12%, lb/MMBtu	1.40E–03	1.91E–06	2.59E–04
	99% UPL of top 12% (test runs), lb/MMBtu	0.00323	2.78E–06	3.26E–04
	99% UPL with fuel variability of top 12%, lb/MMBtu.	.....	3.97E–06	8.04E–04
Units designed for other gas firing	No. of sources in subcategory	199	199	199
	No. of sources with data	13	8	8
	No. in MACT floor	2	1	1
	Avg of top 12%, lb/MMBtu	0.011	8.25E–08	1.70E–06
	99% UPL of top 12% (test runs), lb/MMBtu	0.045	1.86E–07	2.50E–06

For three cases, the proposed new and existing source MACT floors are almost identical because the best performing 12 percent of existing units (for which we have emissions information) is only one or two sources. The reason we look to the best performing 12 percent of sources, even though we have data on fewer than 5 sources, is that these subcategories consist of 30 or more units. CAA section 112(d)(3)(A) provides that standards for existing sources shall not be less stringent than "the average emission limitation achieved by the best performing 12 percent of the existing sources (for which the Administrator has emissions information), * * * in the category or subcategory for categories and subcategories with 30 or more sources." A plain reading of the above statutory provisions is to apply the 12 percent rule in deriving the MACT floor for those categories or subcategories with 30 or more sources. The parenthetical "(for which the Administrator has emissions information)" in CAA section 112(d)(3)(A) modifies the best performing 12 percent of existing sources, which is the clause it immediately follows.

However, in cases where there are 30 or more sources but little emission data, this results in only a few units setting the existing source floor with the result that the new and existing source MACT floors are almost identical. In contrast, if these subcategories had less than 30 sources, we would be required to use the top five best performing sources, rather than the one or two that comprise the top 12 percent. Section 112(d)(3)(B).

We are seeking comment on whether, with the facts of this rulemaking, we should consider reading the intent of Congress to allow us to consider five sources rather than just one or two. First, it seems evident that Congress was concerned that floor determinations should reflect a minimum quantum of data: At least data from 5 sources for source categories of less than 30 sources (assuming that data from 5 sources exist). Second, it does not appear that this concern would be any less for subcategories with 30 or more sources. We are specifically requesting comment on this interpretation relating to the proposed MACT floors.[9]

2. Determination of MACT for Organic HAP

In developing the MACT floor for organic HAP, as described earlier, we are using CO as a surrogate for non-dioxin organic HAP. Table 3 of this preamble presents the number of units in each of the 11 subcategories, along with the number of units from which we have collected emission data. Table 3 also presents for each subcategory (for CO and D/F) the number of units comprising the best performing units (top 12 percent), the average emission level of the top 12 percent, and the MACT floor (99 percent UPL of top 12 percent) which includes the variability across the best performing units and the long term variability.

We calculated the MACT floors based on the upper 99th percentile UPL from the average performance of the best performing units and their variances as described earlier for the fuel-related HAP.

[9] The impact of using a minimum of five sources in the MACT floor analyses for these subcategories and HAP are presented in the Memorandum "MACT Floor Analysis (2010) for the Industrial, Commercial, and Institutional Boilers and Process Heaters National Emission Standards for Hazardous Air Pollutants—Major Sources" located in the Docket.

TABLE 3—SUMMARY OF MACT FLOOR RESULTS FOR THE ORGANIC HAP SUBCATEGORIES

Subcategory	Parameter	CO	Dioxin/Furan (TEQ)
Stoker—Coal	No. of sources in subcategory	361	361.
	No. of sources with data	61	14.
	No. in MACT floor	8	2.
	Avg of top 12%	21.4 ppm @ 3% O_2	0.00182 ng/dscm @ 7% O_2.
	99% UPL of top % (test runs)	48.8 ppm @ 3% O_2	0.00274 ng/dscm @ 7% O_2.
Fluidized Bed—Coal	No. of sources in subcategory	31	31.
	No. of sources with data	17	12.
	No. in MACT floor	3	2.
	Avg of top 12%	12.5 ppm @ 3% O_2	0.000471 ng/dscm @ 7% O_2.
	99% UPL of top % (test runs)	21.4 ppm @ 3% O_2	0.00168 ng/dscm @ 7% O_2.
PC—Coal	No. of sources in subcategory	186	186.
	No. of sources with data	41	10.
	No. in MACT floor	5	2.
	Avg of top 12%	19.2 ppm @ 3% O_2	0.00158 ng/dscm @ 7% O_2.
	99% UPL of top % (test runs)	82.8 ppm @ 3% O_2	0.00307 ng/dscm @ 7% O_2.
Stoker—Biomass	No. of sources in subcategory	320	320.
	No. of sources with data	119	16.
	No. in MACT floor	15	2.
	Avg of top 12%	203 ppm @ 3% O_2	0.000819 ng/dscm @ 7% O_2.
	99% UPL of top % (test runs)	551 ppm @ 3% O_2	0.00339 ng/dscm @ 7% O_2.
Fluidized Bed—Biomass	No. of sources in subcategory	12	12.
	No. of sources with data	7	6.
	No. in MACT floor	5	5.
	Avg of top 12%	97.1 ppm @ 3% O_2	0.00507 ng/dscm @ 7% O_2.
	99% UPL of top 12% (test runs)	245 ppm @ 3% O_2	0.0127 ng/dscm @ 7% O_2.
Suspension Burner/Dutch Oven.	No. of sources in subcategory	62	62.
	No. of sources with data	17	3.
	No. in MACT floor	3	1.
	Avg of top 12%	362 ppm @ 3% O_2	0.00952 ng/dscm @ 7% O_2.
	99% UPL of top 12% (test runs)	1010 ppm @ 3% O_2	0.0279 ng/dscm @ 7% O_2.
Fuel Cell—Biomass	No. of sources in subcategory	26	26.
	No. of sources with data	16	7.
	No. in MACT floor	5	5.
	Avg of top 12%	130 ppm @ 3% O_2	0.00552 ng/dscm @ 7% O_2.
	99% UPL of top 12% (test runs)	262 ppm @ 3% O_2	0.0148 ng/dscm @ 7% O_2.
Units designed for Liquid fuel firing.	No. of sources in subcategory	826	826.
	No. of sources with data	116	17.
	No. in MACT floor	14	3.
	Avg of top 12%	0.443 ppm @ 3% O_2	0.000733 ng/dscm @ 7% O_2.
	99% UPL of top 12% (test runs)	0.911 ppm @ 3% O_2	0.00182 ng/dscm @ 7% O_2.
Units designed for other gases firing.	No. of sources in subcategory	199	199.
	No. of sources with data	75	5.
	No. in MACT floor	9	1.
	Avg of top 12%	0.0737 ppm @ 3% O_2	0.00267 ng/dscm @ 7% O_2.
	99% UPL of top 12% (test runs)	0.134 ppm @ 3% O_2	0.00828 ng/dscm @ 7% O_2.

For organic HAP, as previously discussed above for fuel-related HAP, we account for variability in setting floors, not only because variability is an element of performance, but because it is reasonable to assess best performance over time. Here, however, we know that the organic HAP emissions will also vary over the operating range of the unit, unlike fuel-related HAP emissions. Organic HAP are combustion-related pollutants. That is, their levels of emissions are a function of the combustion process. Combustion units operate most efficiently when operated

at or near their design capacity. The combustion efficiency tends to decrease as the unit's load (steam production) decreases. Most industrial or commercial/institutional units do not continuously operate at or near their design capacity but operate according to the facility's demand for steam. Thus, operation at lower capacity rates must be accounted for in determining operational variability.

As part of EPA's information collection effort, we obtained data on organic HAP (THC and CO) from six units (two coal-fired, two biomass-fired, and two gas-fired) that were collected using CEM over a 30-day period. All of these units were selected to test using CEM to provide variability information because their stack test results indicated that they were among the best performing units.

The CEMS data shows that CO (as a surrogate for non-dioxin organic HAP) from best performing units did not vary much when such unit is operated at below design capacity. Therefore, even though ICI units, due to steam demand, may operate at these low load conditions, no additional variability due to operating load needs to be accounted for since the average CO emission levels that include these low load conditions are within the variability range determined by the statistical analyses of CO emissions from the best performing units. Thus, we are proposing to add no additional variability factor to account for load variability to the MACT floor 99 percent UPL values determined from the stack test data for CO emissions.

This approach reasonably ensures that the emission limit selected as the MACT floor adequately represents the average level of control actually achieved by units in the top 12 percent in each subcategory, considering ordinary operational variability of those units. Both the analysis of the measured emissions from units representative of the top 12 percent, and the variability analysis of those units, are reasonably designed to provide a meaningful estimate of the average performance, or central tendency, of the best controlled 12 percent of units in a given subcategory.

As was the case for the three fuel-dependent MACT floors, the proposed new and existing source MACT floors for eight combustion-dependent subcategories are almost identical because the best performing 12 percent of units (for which we have emissions information) is only one or two sources. Again, the reason we look to the best performing 12 percent of sources is that these subcategories consist of 30 or more units. In contrast, if these subcategories had less than 30 sources, we would be required to use the top five best performing sources, rather than the one or two that comprise the top 12 percent. As stated previously, we are seeking comment on whether, with the facts of this rulemaking, we should consider reading the intent of Congress to allow us to consider five sources rather than just one, two, or three. We are specifically requesting comment on this interpretation relating to the proposed MACT floors.

3. Determination of the Work Practice Standard

CAA section 112(h)(1) states that the Administrator may prescribe a work practice standard or other requirements, consistent with the provisions of CAA sections 112(d) or (f), in those cases where, in the judgment of the Administrator, it is not feasible to enforce an emission standard. CAA section 112(h)(2)(B) further defines the term "not feasible" in this context to apply when "the application of measurement technology to a particular class of sources is not practicable due to technological and economic limitations."

The standard reference methods for measuring emissions of mercury, CO (as a surrogate for organic HAP), D/F, HCl (as a surrogate for acid gases) and PM (as a surrogate for non-mercury metals) are EPA Methods 29, 10, 23, 26A and 5. These methods are reliable but relatively expensive as a group. However, the methods are generally not able to accurately sample small diameter (less than 12 inches) stacks. For example, in these small diameter stacks, the conventional EPA Method 5 stack assembly blocks a significant portion of the cross-section of the duct and, if unaccounted for, could cause inaccurate measurements. Many existing small boilers and process heaters have stacks with diameters less than 12 inches. The stack diameter is generally related to the size of the unit. Units that have capacity below 10 million Btu per hour generally have stacks with diameters less than 12 inches. Also, many existing small units do not currently have sampling ports or a platform for accessing the exhaust stack which would require an expensive modification to install sampling ports and a platform.

We conducted a cost analysis [10] to evaluate the economic impact of the testing and monitoring costs that facilities with small units would incur to demonstrate compliance with the proposed emission limits. The compliance costs imposed on each facility would not only include the costs of the stack tests and monitoring equipment but would also include the capital costs of any installed control equipment. We estimate that the total capital costs of installing control equipment on the over 7,400 small boilers and process heaters to achieve the proposed emission limits would be $6.3 billion. In addition to these costs, additional costs would be incurred because many of these small units do not have test ports or testing platforms installed in order to conduct performance testing. Prior to conducting a stack test each unit would need to construct or rent scaffolding and install test ports. EPA estimates that these small sources would incur an additional $185 million to install test ports and rent temporary scaffolding. Many establishments in each industry, commercial, or institutional sector are associated with multiple (as many as a 700) small units.

The results of the analysis indicate that the annual costs for testing and monitoring costs alone would have a significant adverse economic impact on these facilities. The severity of the economic impact would depend on the size of the facility.

Based on this analysis, the Administrator has determined under CAA section 112(h) that it is not feasible to enforce emission standards for a particular class of existing boilers and process heaters because of the technological and economic limitations described above. Thus, a work practice, as discussed below, is being proposed to limit the emission of HAP for existing boilers and process heaters having a heat input capacity of less than 10 million Btu per hour. We are specifically requesting comment on whether a threshold higher than 10 million Btu per hour meets the technical and economic limitations as specified in CAA section 112(h).

For existing units, the only work practice being used that potentially controls HAP emissions is a tune-up. Fuel dependent HAP are typically controlled by removing them from the flue gas after combustion. The only work practices expected to minimize fuel dependent HAP emissions are reducing the fuel usage or fuel switching to a fuel type with a lower HAP content. Fuel usage can be reduced by improving the combustion efficiency of the unit, such as, by a tune-up. As combustion efficiency decreases, fuel usage must increase to maintain

[10] *Memorandum:* Methodology for Estimating Impacts from Industrial, Commercial, and Institutional Boilers and Process Heaters at Major Sources of Hazardous Air Pollutant Emissions, March 23, 2010.

constant energy output. This increased fuel use results in increased emissions.

On the other hand, organic HAP are formed from incomplete combustion of the fuel. The objective of good combustion is to release all the energy in the fuel while minimizing losses from combustion imperfections and excess air. The combination of the fuel with the oxygen requires temperature (high enough to ignite the fuel constituents), mixing or turbulence (to provide intimate oxygen-fuel contact), and sufficient time (to complete the process), sometimes referred to the three Ts of combustion. Good combustion practice (GCP), in terms of combustion units, could be defined as the system design and work practices expected to minimize organic HAP emissions.

We have obtained information on units that reported using GCP, as part of the information collection effort for the NESHAP. The data that we have suggests that units typically conduct tune-ups. We also reviewed State regulations and permits. The work practices listed in State regulations includes tune-ups (10 States), operator training (1 State), periodic inspections (2 States), and operation in accordance with manufacturer specifications (1 State). Of the units with a capacity of less than 10 MMBtu/h that responded to EPA's information collection effort for the NESHAP, 80 percent reported conducting a tune-up program. Ultimately, we determine that at least 6 percent of the units in each of the subcategories are subject to a tune-up requirement. Therefore, the proposed work practice of a tune-up [11] program does establish the MACT floor for HAP emissions from existing units with a heat input capacity of less than 10 MMBtu/h.

We are also proposing a work practice standard under section 112(h) that would require an annual tune-up for existing boilers and process heaters combusting natural gas or refinery gas. These boilers and process heaters are units included in the Gas 1 and metal processing furnace subcategories. We are specifically seeking comment on whether the application of measurement methodology to sources in this subcategory is impracticable due to technological or economic limitations, as specified in section 112(h)(2)(B).

This work practice standard is being proposed for several reasons. First, the capital costs estimated for installing controls on these boilers and process heaters to comply with MACT limits for the five HAP groups is over $14 billion. This cost includes installation of a combination system of a fabric filter (for PM, mercury, and D/F control) and a wet scrubber (for HCl control). This capital cost is higher than the estimated combined capital cost for boilers and process heaters in all of the other subcategories. The projected control system needed for boilers and process heaters in the other subcategories is also a combined fabric filter/wet scrubber system.

Second, we believe that proposing emission standards for gas-fired boilers and process heaters that result in the need to employ the same emission control system as needed for the other fuel types would have the negative benefit of providing a disincentive for switching to gas as a control technique (and a pollution prevention technique) for boilers and process heaters in the other fuel subcategories. In addition, emission limits on gas-fired boilers and process heaters may have the negative benefit of providing an incentive for a facility to switch from gas (considered a "clean" fuel) to a "dirtier" but cheaper fuel (i.e., coal). It would be inconsistent with the emissions reductions goals of the CAA, and of section 112 in particular, to adopt requirements that would result in an overall increase in HAP emissions. We are soliciting comment on the extent to which natural gas facilities would be expected to switch to a "dirtier" fuel if emissions limits for such facilities are adopted.

Thus, a work practice, as discussed above for small boilers and process heaters, is being proposed to limit the emission of HAP for existing natural gas-fired and refinery gas-fired boilers and process heaters.

We request comments on whether the emission limits listed in Table 4 of this preamble for the Gas 1 and Metal Process Furnace subcategories should be promulgated. Comments should include detailed information regarding why emission limits for these gas-fired boilers and process heaters are appropriate.

TABLE 4—SUMMARY OF MACT FLOOR RESULTS FOR THE GAS 1 AND METAL PROCESS FURNACE SUBCATEGORIES

Subcategory	Parameter	PM	Mercury	HCl	CO	Dioxin/furan (total TEQ)
Units designed for NG/RG firing.	No. of sources in subcategory.	10,783	10,783	10,783	10,783	10,783.
	No. of sources with data.	144	14	11	754	8.
	No. in MACT floor	18	2	2	91	1.
	Avg of top 12%	0.00388 lb/MMBtu	1.1E–07 lb/MMBtu	1.01E–04 lb/MMBtu.	1.45 ppm @ 3% oxygen.	0.0026 ng/dscm @ 7% oxygen.
	99% UPL of top 12% (test runs).	0.03 lb/MMBtu	2.0E–07 lb/MMBtu	0.0002 lb/MMBtu	20 ppm @ 3% oxygen.	0.01 ng/dscm @ 7% oxygen.
Metal Process Furnaces.	No. of sources in subcategory.	749	749	749	749	749.
	No. of sources with data.	9	7	9	15	7.
	No. in MACT floor	2	1	2	2	1.
	Avg of top 12%	0.0047 lb/MMBtu	3.3E–08 lb/MMBtu	1.92E–04 lb/MMBtu.	0.38 ppm @ 3% oxygen.	0.0026 ng/dscm @ 7% oxygen.
	99% UPL of top 12% (test runs).	0.02 lb/MMBtu	2.0E–07 lb/MMBtu	0.0004 lb/MMBtu	2 ppm @ 3% oxygen.	0.004 ng/dscm @ 7% oxygen.

[11] Tune-up procedure is specified in section 63.7540 of this proposed rule and includes making adjustments to the burner to optimize the flame to minimize CO emissions consistent with the manufacturer's specifications.

E. How did EPA consider beyond-the-floor options for existing units?

Once the MACT floor determinations were done for each subcategory, we considered various regulatory options more stringent than the MACT floor level of control (*i.e.,* technologies or other work practices that could result in lower emissions) for the different subcategories. A detailed description of the beyond-the-floor consideration is in the memorandum "Methodology for Estimating Cost and Emissions Impacts for Industrial, Commercial, Institutional Boilers and Process Heaters National Emission Standards for Hazardous Air Pollutants" in the docket.

We could not identify better HAP emissions reduction approaches that could achieve greater emissions reductions of HAP than the control technology combination (fabric filter, carbon injection, scrubber, and GCP) that we expect will be used to meet the MACT floor level of control.

For each subcategory, fuel switching to natural gas is an option that would reduce HAP emissions. We determined that fuel switching was not an appropriate beyond-the-floor option. First, natural gas supplies are not available in some areas, and supplies to industrial customers can be limited during periods when natural gas demand exceeds supply. Additionally, the estimated emissions reductions that would be achieved if solid and liquid fuel units switched to natural gas were compared with the estimated cost of converting existing solid fuel and liquid fuel units to fire natural gas. The annualized cost of fuel switching was estimated to be $13.5 billion compared with $3.5 billion under the floor approach. The emission reduction associated with fuel switching was estimated to be 4,296 tons per year for metallic HAP, 8 tons per year for mercury, and 50,332 tons per year for inorganic HAP (HCl and HF). The cost for fuel switching is over double the cost of the floor approach while the emission reductions associated with fuel switching are approximately the same. Additional detail on the calculation procedures is provided in the memorandum "Development (2010) of Fuel Switching Costs and Emissions Reductions for Industrial, Commercial, and Institutional Boilers and Process Heaters National Emission Standards for Hazardous Air Pollutants" in the docket.

We also considered the pollution prevention and energy conservation measure of an energy assessment/audit as a beyond-the-floor option for HAP emissions. An energy assessment provides valuable information on improving energy efficiency. An energy assessment, or audit, is an in-depth energy study identifying all energy conservation measures appropriate for a facility given its operating parameters. An energy assessment refers to a process which involves a thorough examination of potential savings from energy efficiency improvements, pollution prevention, and productivity improvement. It leads to the reduction of emissions of pollutants through process changes and other efficiency modifications. Besides reducing operating and maintenance costs, improving energy efficiency reduces negative impacts on the environment and results in reduced emissions and improved public health. Improvement in energy efficiency results in decreased fuel use which results in a corresponding decrease in emissions (both HAP and non-HAP) from the combustion unit, but not necessarily a decrease in emissions of all HAP emitted. The Department of Energy has conducted energy assessments at selected manufacturing facilities and reports that facilities can reduce fuel/energy use by 10 to 15 percent by using best practices to increase their energy efficiency. Many best practices are considered pollution prevention because they reduce the amount of fuel combusted which results in a corresponding reduction in emissions from the fuel combustion. The most common best practice is simply tuning the boiler to the manufacturer's specification.

The one-time cost of an energy assessment ranges from $2500 to $55,000 depending on the size of the facility. The total annualized cost if each major source facility conducted an energy assessment is estimated at $26 million. If a facility implemented the cost-effective energy conservation measures identified in the energy assessment, it would potentially result in greater HAP reduction than achieved by a boiler tune-up alone and potentially reducing HAP emissions (HCl, mercury, non-mercury metals, and VOC) by an additional 820 to 1,640 tons per year. In addition, the costs of any energy conservation improvement will be offset by the cost savings in lower fuel costs. Therefore, we decided to go beyond the MACT floor for this proposed rule for the existing units. These proposed standards for existing units include the requirement of a performance of an energy assessment to identify cost-effective energy conservation measures. Since there was insufficient information to determine if requiring implementation of cost-effective measures were economically feasible, we are seeking comment on this point.

In this proposed rule, we are defining a cost-effective energy conservation measure to be any measure that has a payback (return of investment) period of 2 years or less. This payback period was selected based on section 325(o)(2)(B)(iii) of the Energy Policy and Conservation Act which states that there is a presumption that an energy conservation standard is economically justified if the increased installed cost for a measure is less than three times the value of the first-year energy savings resulting from the measure.

We believe that an energy assessment is an appropriate beyond-the-floor control technology because it is one of the measures identified in CAA section 112(d)(2). CAA section 112(d)(2) states that "Emission standards promulgated * * * and applicable to new or existing sources * * * is achievable * * * through application of measures, processes, methods, systems or techniques including, but not limited to measures which * * * reduce the volume of, or eliminate emissions of, such pollutants through process changes, substitution of materials or other modifications * * *"

The purpose of an energy assessment is to identify energy conservation measures (such as, process changes or other modifications to the facility) that can be implemented to reduce the facility energy demand which would result in reduced fuel use. Reduced fuel use will result in a corresponding reduction in HAP, and non-HAP, emissions. Thus, an energy assessment, in combination with the MACT emission limits will result in the maximum degree of reduction in emissions as required by 112(d)(2). Therefore, we are proposing to require all existing sources to conduct a one-time energy assessment to identify cost-effective energy conservation measures.

We are proposing that the energy assessment be conducted by energy professionals and/or engineers that have expertise that cover all energy using systems, processes, and equipment. We are aware of, at least, two organizations that provide certification of specialists in evaluating energy systems. We are proposing that a qualified specialized is someone who has successfully completed the Department of Energy's Qualified Specialist Program for all systems or a professional engineer certified as a Certified Energy Manager by the Association of Energy Engineers.

As part of the energy assessment, we are proposing that the facility assess its energy management program and

practices using EPA's ENERGY STAR Facility Energy Management Assessment Matrix. ENERGY STAR has a simple facility energy management assessment tool that can be used as part of the assessment process. This tool identifies gaps in current practices. Facilities, as part of the requirement, would identify steps to close the management gaps. We are also proposing that the facility develop an energy management program according to the ENERGY STAR Guidelines for Energy Management (*see www.energystar.gov/guidelines*).[12]

We are specifically requesting comment on: (1) Whether our estimates of the assessment costs are correct; (2) is there adequate access to certified assessors; (3) are there other organizations for certifying energy engineers; (4) are online tools adequate to inform the facility's decision to make efficiency upgrades; (5) is the definition of "cost-effective" appropriate in this context since it refers to payback of energy saving investments without regard to the impact on HAP reduction; (6) what rate of return should be used; and (7) are there other guidelines for energy management beside ENERGY STAR's that would be appropriate.

We considered proposing a beyond-the-floor requirement for certain sources in the natural gas and refinery gas subcategory (i.e., the Gas 1 subcategory). Specifically, we considered proposing that facilities with boilers or process heaters combusting refinery gas install and maintain a carbon adsorber bed system[13] to remove mercury from the refinery gas before combustion in a boiler or process heater. Based on data from the information collection effort, refinery gas contains mercury and additional mercury reductions can be achieved from units combusting refinery gas. Consequently, we analyzed the mercury emissions reductions and additional cost of adopting this work practice. The annualized cost of the carbon adsorber bed system to treat the refinery gas prior to combustion is estimated to be about 1.6 billion dollars with a mercury emission reduction of 0.8 tons. The results indicated that while additional mercury emissions reductions would be realized, the costs would be too high to consider it a feasible beyond-the-floor option. Nonair quality health, environmental impacts, and energy effects were not significant factors, because there would be little difference in the nonair quality health and environmental impacts of requiring the installation of carbon bed adsorbers. Therefore, we are not proposing installation of a carbon adsorber bed system as a beyond-the-floor requirement.

F. Should EPA consider different subcategories for solid fuel boilers and process heaters?

The boilers and process heaters source category is tremendously heterogeneous. EPA has attempted to identify subcategories that provide the most reasonable basis for grouping and estimating the performance of generally similar units using the available data. We believe that the subcategories we selected are appropriate.

EPA requests comments on whether additional or different subcategories should be considered. Comments should include detailed information regarding why a new or different subcategory is appropriate (based on the available data or adequate data submitted with the comment), how EPA should define any additional/different subcategories, how EPA should account for varied or changing fuel mixtures, and how EPA should use the available data to determine the MACT floor for any new or different categories.

G. How did EPA determine the proposed emission limitations for new units?

All standards established pursuant to section 112 of the CAA must reflect MACT, the maximum degree of reduction in emissions of air pollutants that the Administrator, taking into consideration the cost of achieving such emissions reductions, and any nonair quality health and environmental impacts and energy requirements, determines is achievable for each category. The CAA specifies that MACT for new boilers and process heaters shall not be less stringent than the emission control that is achieved in practice by the best-controlled similar source. This minimum level of stringency is the MACT floor for new units. However, EPA may not consider costs or other impacts in determining the MACT floor. EPA must consider cost, nonair quality health and environmental impacts, and energy requirements in connection with any standards that are more stringent than the MACT floor (beyond-the-floor controls).

H. How did EPA determine the MACT floor for new units?

Similar to the MACT floor process used for existing units, the approach for determining the MACT floor must be based on available emissions test data. Using such an approach, we calculated the MACT floor for a subcategory of sources by ranking the emission test results from units within the subcategory from lowest to highest to identify the best controlled similar source. The MACT floor limits for each of the HAP and HAP surrogates (PM, mercury, CO, HCl, and D/F) are calculated based on the performance (numerical average) of the lowest emitting (best controlled) source for each pollutant in each of the subcategories.

The MACT floor limits for new sources were calculated using the same formula as was used for existing sources. However, as was the case for the existing MACT floor analysis, we determined that it was inappropriate to use only this MACT floor approach to determine variability and to establish emission limits for new boilers and process heaters. The main problem with using only the HAP emissions test data is that the data may not reflect the variability of fuel-related HAP from the best controlled similar source over the long term. Based on our current information, fuel-related HAP levels in the various fuels can vary significantly over time. The variations in fuel-related HAP inputs directly translate to a variability of fuel-related HAP stack emissions.

As previously discussed above, we account for variability of the best-controlled source in setting floors, not only because variability is an element of performance, but because it is reasonable to assess best performance over time. If we do not account for this variability, we would expect that even the best controlled similar source would potentially exceed the floor emission levels a significant part of the time which would mean that their variability was not properly accounted for when setting the floor. We calculated the MACT floor based on the UPL (upper 99th percentile) as described earlier from the average performance of the best controlled similar source, Students t-factor, and the total variability of the best-controlled source.

[12] The location of the guidance is: *http://www.energystar.gov/index.cfm?c=guidelines.assess_facility_energy*.

[13] Carbon adsorption of mercury can be accomplished by (a) injecting dry carbon with or without other dry sorbents into the offgas upstream of a PM control device (typically a baghouse), or (b) using a fixed or moving bed of granular carbon through which the offgas flows. In a typical fixed bed carbon adsorption system, the flue gas flows through a vessel packed with a specified depth of the carbon granules. The bed and packing are designed to limit the linear velocity of the offgas in the bed to increase the contact time with the carbon. Due to the increased contact times and typically lower operating temperatures, better removal efficiencies can be achieved than for carbon injection. At a residence time of 10 seconds in the carbon bed, virtually all of the mercury can be removed. (Ref. NUCON INTERNATIONAL, Inc., "Design & Performance Characteristics of MERSORBB Mercury Adsorbents in Liquids and Gases," NUCON 11B28, August 1995.)

This approach reasonably ensures that the emission limit selected as the MACT floor adequately represents the average level of control actually achieved by the best controlled similar source, considering ordinary operational variability.

A detailed discussion of the MACT floor methodology is presented in the memorandum "MACT Floor Analysis for the Industrial, Commercial, and Institutional Boilers and Process Heaters National Emission Standards for Hazardous Air Pollutants" in the docket.

The approach that we use to calculate the MACT floors for new sources is somewhat different from the approach that we use to calculate the MACT floors for existing sources. While the MACT floors for existing units are intended to reflect the performance achieved by the average of the best performing 12 percent of sources, the MACT floors for new units are meant to reflect the emission control that is achieved in practice by the best controlled source. Thus, for existing units, we are concerned about estimating the central tendency of a set of multiple units, while for new units, we are concerned about estimating the level of control that is representative of that achieved by a single best controlled source. As with the analysis for existing sources, the new unit analysis must account for variability. To accomplish this for new sources, for the fuel dependent HAP emissions, we determined what the best controlled source has achieved in light of the inherent and unavoidable variations in the HAP content of the fuel that such unit might potentially use. For non-fuel dependent HAP emissions, on the other hand, we look at the inherent variability of the control technology used by the best-controlled source in the subcategory. These approaches, respectively, represent the most reasonable way to estimate performance for purposes of establishing MACT floors for new units, given the data available.

For fuel dependent HAP emissions (mercury and HCl), we calculated the variability factor by looking at data on HAP variability in fuel obtained through our information collection request. We derived the fuel dependent variability factor by dividing the highest observed HAP concentration by the lowest observed HAP concentration from the fuel analyses from the best-controlled source. Once we calculated the fuel dependent variability factors, we applied these factors to the average measured emissions performance of the best controlled similar source to derive the MACT floor level of control. This approach reasonably estimates the best source's level of emissions, adjusted for unavoidable variation in fuel characteristics which have a direct impact on emissions.

1. Determination of MACT for the Fuel-Related HAP

In developing the MACT floor for the fuel-related HAP (PM, HCl, and mercury), as described earlier, we are using PM as a surrogate for non-mercury metallic HAP and HCl as a surrogate for the acid gases. Table 5 presents for each subcategory and fuel-related HAP the average emission level of the best controlled similar source and the MACT floor (99 percent UPL) which includes the variability across the best controlled similar source and the long term variability of that source.

TABLE 5—SUMMARY OF MACT FLOOR RESULTS FOR THE FUEL-RELATED HAP FOR NEW SOURCES

Subcategory	Parameter	PM Lb/MMBtu	Mercury Lb/MMBtu	HCl Lb/MMBtu
Units designed for Coal firing	Avg of top performer	0.000396	1.18E–07	3.85E–05
	99% UPL of top performer (test runs)	0.000928	3.89E–07	5.21E–05
Units designed for Biomass firing	Avg of top performer	0.00216	9.73E–08	7.85E–04
	99% UPL of top performer (test runs)	0.00711	1.86E–07	3.07E–03
Units designed for Liquid Fuel firing	Avg of top performer	0.000511	5.87E–08	3.99E–04
	99% UPL of top performer (test runs)	0.00154	2.47E–07	9.80E–04
Units designed for other gas firing	Avg of top performer	0.00042	8.25E–08	1.70E–06
	99% UPL of top performer (test runs)	0.0024	1.86E–07	2.50E–06

2. Determination of MACT for Organic HAP

In developing the MACT floor for organic HAP, as described earlier, we are using CO as a surrogate for non-dioxin organic HAP. Table 6 presents for each subcategory and CO and D/F the average emission level of the best controlled similar source and the MACT floor (99 percent UPL) which includes the variability across the best controlled similar source and the long term variability of that source.

TABLE 6—SUMMARY OF MACT FLOOR RESULTS FOR THE ORGANIC HAP FOR NEW SOURCES

Subcategory	Parameter	CO (ppm @ 3 percent oxygen)	Dioxin/Furan (TEQ) (ng/dscm @ 7 percent oxygen)
Stoker—Coal	Avg of top performer	4.29	1.52E–03
	99% UPL of top performer (test runs)	6.53	2.82E–03
Fluidized Bed—Coal	Avg of top performer	8.26	9.05E–06
	99% UPL of top performer (test runs)	*39.9	2.54E–05
PC—Coal	Avg of top performer	25.0	1.04E–03
	99% UPL of top performer (test runs)	*97.5	1.47E–03
Stoker—Biomass	Avg of top performer	920	1.52E–05
	99% UPL of top performer (test runs)	*3730	4.86E–05
Fluidized Bed—Biomass	Avg of top performer	25.8	2.27E–03
	99% UPL of top performer (test runs)	34.2	6.48E–03
Suspension Burner/Dutch Oven.	Avg of top performer	352	9.52E–03
	99% UPL of top performer (test runs)	*1050	2.79E–02
Fuel Cell—Biomass	Avg of top performer	110	2.42E–04

TABLE 6—SUMMARY OF MACT FLOOR RESULTS FOR THE ORGANIC HAP FOR NEW SOURCES—Continued

Subcategory	Parameter	CO (ppm @ 3 percent oxygen)	Dioxin/Furan (TEQ) (ng/dscm @ 7 percent oxygen)
	99% UPL of top performer (test runs)	*264	4.17E–04
Units designed for Liquid fuel firing	Avg of top performer	0.125	1.09E–03
	99% UPL of top performer (test runs)	0.125	1.52E–03
Units designed for other gases firing	Avg of top performer	0.0129	2.67E–03
	99% UPL of top performer (test runs)	0.0129	8.28E–03

* Value is higher than existing floor limit in the same subcategory. Therefore defaulted to existing floor limit for the same subcategory.

For organic HAP, as previously discussed above for the fuel-related, we account for variability in setting floors, not only because variability is an element of performance, but because it is reasonable to assess best performance over time. Here, we know that CO (as a surrogate for non-dioxin organic HAP) emissions does not vary significantly over the operating range of the unit. Thus, we have not added any additional operational variability to account for operation at lower capacity rates.

We are proposing a work practice standard under section 112(h) that would require an annual tune-up for new boilers and process heaters combusting natural gas or refinery gas. These boilers and process heaters are units included in the Gas 1 and metal processing furnace subcategories. We are specifically seeking comment on whether the application of measurement methodology to sources in this subcategory is impracticable due to technological or economic limitations, as specified in section 112(h)(2)(B).

This proposal for new boilers and process heaters combusting natural gas or refinery gas is based on the same reasons discussed previously for existing boilers and process heaters combusting natural gas or refinery gas. That is, we believe that proposing emission standards for new gas-fired boilers and process heaters that result in the need to employ the same emission control system as needed for the other fuel types would have the negative benefit of providing a disincentive for switching to gas as a control technique (and a pollution prevention technique) for boilers and process heaters in the other fuel subcategories. In addition, emission limits on gas-fired boilers and process heaters may have the negative benefit of providing an incentive for a facility to switch from gas (considered a "clean" fuel) to a "dirtier" but cheaper fuel (*i.e.,* coal). It would be inconsistent with the emissions reductions goals of the CAA, and of section 112 in particular, to adopt requirements that would result in an overall increase in HAP emissions. We are soliciting comment on the extent to which new facilities would be expected to switch away from natural gas to a "dirtier" fuel if emissions limits for new such facilities are adopted.

Thus, a work practice, as discussed above for existing boilers and process heaters combusting natural gas or refinery gas, is being proposed to limit the emission of HAP for new natural gas-fired and refinery gas-fired boilers and process heaters.

We request comments on whether the emission limits listed in Table 7 of this preamble for new units in the Gas 1 and Metal Process Furnace subcategories should be promulgated. Comments should include detailed information regarding why emission limits for these gas-fired boilers and process heaters are appropriate.

TABLE 7—SUMMARY OF MACT FLOOR RESULTS FOR NEW UNITS IN THE GAS 1 AND METAL PROCESS FURNACE SUBCATEGORIES

Subcategory	Parameter	PM Lb/MMBtu	Mercury Lb/MMBtu	HCl LB/MMBtu	CO (ppm @ 3 percent oxygen)	Dioxin/Furan (Total TEQ) (ng/dscm @ 7 percent oxygen)
Units designed for NG/RG firing.	Avg of top performer	0.00013	9.4E–08	7.3E–05	5	0.0026
	99% UPL of top (test runs) =	0.0005	2.0E–07	0.0002	20	0.01
Metal Process Furnaces	Avg of top performer	0.0065	3.3E–08	8.6E–05	0.5	0.0026
	99% UPL of top (test runs) =	0.02	2.0E–07	0.0002	2	0.004

I. How did EPA consider beyond-the-floor for new units?

The MACT floor level of control for new units is based on the emission control that is achieved in practice by the best controlled similar source within each of the subcategories. No technologies were identified that would achieve HAP reduction greater than the new source floors for the subcategories.

Fuel switching to natural gas is a potential regulatory option beyond the new source floor level of control that would reduce HAP emissions from non-gas-fired units. However, based on current trends within the industry, EPA projects that the majority of new boilers and process heaters will be built to fire natural gas as opposed to solid and liquid fuels such that the overall emissions reductions associated with this option would be minimal. In addition, natural gas supplies are not available in some areas, and supplies to industrial customers can be limited during periods when natural gas demand exceeds supply. Thus, this potential control option may be unavailable to many sources in practice. Limited emissions reductions in combination with the high cost of fuel switching and considerations about the

availability and technical feasibility of fuel switching makes this an unreasonable regulatory option that was not considered further.[14] Nonair quality health, environmental impacts, and energy effects were not significant factors. No beyond-the-floor options for gas-fired boilers were identified.

An energy assessment is a beyond-the-floor standard being proposed for existing facilities. However, we are not proposing it as a beyond-the-floor option for new major source facilities since we believe it would not be cost effective because most projected new boilers or process heaters will be installed at existing major source facility which would have already conducted an energy assessment as required by this proposed rule. We also believe that any new greenfield major source facility having boilers or process heaters will be designed to operate with energy efficiency.

Based on the analysis discussed above, EPA decided to not go beyond the MACT floor level of control for new sources in this proposed rule. A detailed description of the beyond-the-floor consideration is in the memorandum "Methodology for Estimating Cost and Emissions Impacts for Industrial, Commercial, Institutional Boilers and Process Heaters National Emission Standards for Hazardous Air Pollutants" in the docket.

J. Consideration of whether to set standards for HCl and other acid gases under section 112(d)(4)

We are proposing to set a conventional MACT standard for HCl and, for the reasons explained elsewhere in today's notice, are proposing that the HCl limit also serve as a surrogate for other acid gas HAP. We also considered whether it was appropriate to exercise our discretionary authority to establish health-based emission standards under section 112(d)(4) for HCl and each of the other relevant HAP acid gases: Chlorine (Cl_2), hydrogen fluoride (HF), and hydrogen cyanide (HCN)[15] (since if it were regulated under section 112(d)(4), HCl may no longer be the appropriate surrogate for these other HAPs).[16] This section sets forth the requirements of section 112(d)(4), our analysis of the information available to us that informed the decision on whether to exercise discretion, questions regarding the application of 112(d)(4) and solicitation of comments, and explains how this case relates to prior decisions EPA has made under section 112(d)(4) with respect to HCl.

As a general matter, section 112(d) requires MACT standards at least as stringent as the MACT floor to be set for all HAP emitted from major sources. However, section 112(d)(4) provides that for HAP with established health thresholds, the Administrator has the discretionary authority to consider such health thresholds when establishing emission standards under section 112(d). This provision is intended to allow EPA to establish emission standards other than conventional MACT standards, in cases where a less stringent emission standard will still ensure that the health threshold will not be exceeded, with an ample margin of safety. In order to exercise this discretion, EPA must first conclude that the HAP at issue has an established health threshold and must then provide for an ample margin of safety when considering the health threshold to set an emission standard.

The legislative history of section 112(d)(4) indicates that Congress did not intend for this provision to provide a mechanism for EPA to delay issuance of emission standards for sources of HAPs. Finally, the legislative history also indicates that a health-based emission limit under section 112(d)(4) should be set at the level at which no observable effects occur, with an ample margin of safety. S. Rep. 101–228 at 171–72.

It is clear the Administrator may exercise her discretionary authority under 112(d)(4) only with respect to pollutants with an health threshold. Where there is an established threshold, the Administrator interprets section 112(d)(4) to allow her to weigh additional factors, beyond any established health threshold, in making a judgment whether to set a standard for a specific pollutant based on the threshold, or instead follow the traditional path of developing a MACT standard after determining a MACT floor. In deciding whether to exercise her discretion for a threshold pollutant for a given source category, the Administrator interprets section 112(d)(4) to allow her to take into account factors such as the following: The potential for cumulative adverse health effects due to concurrent exposure to other HAPs with similar biological endpoints, from either the same or other source categories, where the concentration of the threshold pollutant emitted from the given source category is below the threshold; the potential impacts on ecosystems of releases of the pollutant; and reductions in criteria pollutant emissions and other co-benefits that would be achieved via the MACT standard. Each of these factors is directly relevant to the health and environmental outcomes at which section 112 of the Clean Air Act is fundamentally aimed. If the Administrator does determine that it is appropriate to set a standard based on a health threshold, she must develop emission standards that will ensure the public will not be exposed to levels of the pertinent HAP in excess of the health threshold, with an ample margin of safety.

EPA has exercised its discretionary authority under section 112(d)(4) in a handful of prior actions setting emissions standards for other major source categories, including the emissions standards issued in 2004 for commercial and industrial boilers and process heaters, which were vacated on other grounds by the U.S. Court of Appeals for the D.C. Circuit. In both the Pulp and Paper MACT, 63 FR at 18765 (April 15, 1998), and Lime Manufacturing MACT, 67 FR at 78054 (December 20, 2002), EPA invoked 112(d)(4) for HCl emissions for discrete units within the facility. In those actions, EPA concluded that HCl had an established health threshold (in those cases it was interpreted as the reference concentration for chronic effects, or RfC) and was not classified as a human carcinogen. In light of the absence of evidence of carcinogenic risk, the availability of information on non-carcinogenic effects, and the limited potential health risk associated with the discrete units being regulated, EPA concluded that it was appropriate to exercise its discretion under section 112(d)(4) for HCl under the circumstances of those actions. EPA did not set an emission standard based on the health threshold; rather, the exercise of EPA's discretion in those cases in effect exempted HCl from the MACT requirement. In a more recent action, EPA decided not to propose a health-based emission standard for HCl

[14] Memorandum "Development (2010) of Fuel Switching Costs and Emission Reductions for Industrial, Commercial, and Institutional Boilers and Process Heaters National Emission Standards for Hazardous Air Pollutants," April 2010.

[15] Before considering whether to exercise her discretion under section 112(d)(4) for a particular pollutant, the Administrator must first conclude that a health threshold has been established for the pollutant.

[16] HCl can serve as a surrogate for the other acid gases in a technology-based MACT standard, because the control technology that would be used to control HCl would also reduce the other acid gases. By contrast, HCl would not be an appropriate surrogate for a health-based emission standard that is protective against the potential adverse health effects from the other acid gases, because these gases (*e.g.,* HCN) can act on biological organisms in a different manner than HCl, and each of the acid gases affects human health with a different dose-response relationship.

emissions under section 112(d)(4) for Portland Cement facilities, 74 FR at 21154 (May 6, 2009). EPA has never implemented a NESHAP that used section 112(d)(4) with respect to HF, Cl_2 or HCN.[17]

Since any emission standard under section 112(d)(4) must consider the established health threshold level, with an ample margin of safety, in this rulemaking EPA has considered the adverse health effects of the HAP acid gases, beginning with HCl. Research indicates that HCl is associated with chronic respiratory toxicity. In the case of HCl, this means that chronic inhalation of HCl can cause tissue damage in humans. Among other things, it is corrosive to mucous membranes and can cause damage to eyes, nose, throat, and the upper respiratory tract as well as pulmonary edema, bronchitis, gastritis, and dermatitis. Considering this respiratory toxicity, EPA has established a chronic reference concentration (RfC) for the inhalation of HCl of 20 $\mu g/m^3$. An RfC is defined as an estimate (with uncertainty spanning perhaps an order of magnitude) of a continuous inhalation exposure to the human population (including sensitive subgroups[18]) that is likely to be without an appreciable risk of deleterious effects during a lifetime. The development of the RfC for HCl reflected data only on its chronic respiratory toxicity. It did not take into account effects associated with acute exposure,[19] and, in this situation, the IRIS health assessment did not evaluate the potential carcinogenicity of HCl (on which there are very limited studies). As a reference value for a single pollutant, the RfC also did not reflect any potential cumulative or synergistic effects of an individual's exposure to multiple HAPs or to a combination of HAPs and criteria pollutants. As the RfC calculation focused on health effects, it did not take into account the potential environmental impacts of HCl.

With respect to the potential health effects of HCl, we know the following:

1. Chronic exposure to concentrations at or below the RfC is not expected to cause chronic respiratory effects;

2. Little research has been conducted on its carcinogenicity. The one occupational study of which we are aware found no evidence of carcinogenicity;

3. There is a significant body of scientific literature addressing the health effects of acute exposure to HCl (California Office of Health Hazard Assessment, 2008. Acute Toxicity Summary for Hydrogen Chloride, *http://www.oehha.ca.gov/air/hot_spots/2008/AppendixD2_final.pdf#page=112 EPA,* 2001). However, we currently lack information on the peak short-term emissions of HCl from boilers, which might allow us to determine whether a chronic health-based emission standard for HCl would ensure that acute exposures will not pose any health concerns;

4. We are aware of no studies explicitly addressing the toxicity of mixtures of HCl with other respiratory irritants. However, many of the other HAPs (and criteria pollutants) emitted by boilers also are respiratory irritants, and in the absence of information on interactions, EPA assumes an additive cumulative effect (Supplementary Guidance for Conducting Health Risk Assessment of Chemical Mixtures. *http://cfpub.epa.gov/ncea/cfm/recordisplay.cfm?deid=20533*). The fact that boilers can be located among a wide variety of industrial facilities makes predicting and assessing all possible mixtures of HCl and other emitted air pollutants difficult, if not impossible.

In addition to potential health impacts, the Administrator also has evaluated the potential for environmental impacts when considering whether to exercise her discretion under section 112(d)(4). The legislative history states that employing a section 112(d)(4) standard rather than a conventional MACT standard "shall not result in adverse environmental effects which would otherwise be reduced or eliminated." S. Rep. 101–228 at 171. When HCl gas encounters water in the atmosphere, it forms an acidic solution of hydrochloric acid. In areas where the deposition of acids derived from emissions of sulfur and nitrogen oxides are causing aquatic and/or terrestrial acidification, with accompanying ecological impacts, the deposition of hydrochloric acid could exacerbate these impacts. Being mindful of the legislative history, it is appropriate to consider potential adverse environmental effects in addition to adverse health effects when setting an emission standard for HCl under section 112(d)(4).

Because the statute requires an ample margin of safety, it would be reasonable to set any section 112(d)(4) emission standard for a pollutant with a health threshold at a level that at least assures that, for the sources in the controlled category or subcategory, persons exposed to emissions of the pollutant would not experience the adverse health effects on which the threshold is based. In the case of this proposed rulemaking, we have concluded that we do not have sufficient information at this time to establish what the health-based emission standards would be for HCl or the other acid gases. Public comments are invited on our information and conclusion.

When Congress established the technology-based MACT program in the 1990 Clean Air Act Amendments, it recognized the challenges involved in evaluating health risk. Determining an emission standard that will protect the public health with an ample margin of safety is complex, in part because of the limited data available on cumulative impacts. In order to assess the feasibility of health-based standards in this rule, the agency believes it would need additional facility-specific emissions information. Such information would enable us to develop model plants for the eleven subcategories considered in the proposed rule and allow us to conduct the dispersion modeling necessary to establish health-based emission limits. These limits would need to be established to ensure that exposure is below the health threshold for sources in the subcategory, and account for the possibility of multiple exposures from co-located sources as well as potential short-term increases in emissions for these sources and their short-term impacts. Currently, the Agency has very limited information on facility-specific emissions, plant configurations, and overall fence-line characteristics for this large and diverse source category. This information is a precondition to establishing health-based emission standards that provide an ample margin of safety. To this end, the Agency is requesting information on these factors from the regulated community and others to allow us to evaluate the appropriateness and viability of health-based emission limits.

EPA specifically requests comment on the following issues. Additional information on these issues is important to implement section 112(d)(4) in a reasonable and appropriate manner, if we were to establish emissions standards under that provision. First,

[17] EPA has not classified HF, chlorine gas, or HCN with respect to carcinogenicity. However, at this time the Agency is not aware of any data that would suggest any of these HAPs are carcinogens.

[18] "Sensitive subgroups" may refer to particular life stages, such as children or the elderly, or to those with particular medical conditions, such as asthmatics.

[19] California EPA considered acute toxicity and established a 1-hour reference exposure level (REL) of 2.1 mg/m^3. An REL is the concentration level at or below which no adverse health effects are anticipated for a specified exposure duration. RELs are designed to protect the most sensitive individuals in the population by the inclusion of margins of safety.

EPA requests comment on whether it would be appropriate to establish section 112(d)(4) standards for each acid gas described above, or whether EPA could set a single 112(d)(4) standard for one of the acid gases as a surrogate for the other acid gases. Commenters who believe a surrogate would be appropriate should also address the mechanism that should be used to determine the appropriate surrogate. In order to set individual standards under section 112(d)(4) for each acid gas, we would need to be able to conclude that each has an appropriate health threshold, that there is no scientific evidence that they are carcinogenic, and that the emission standard for each uses the best available science to consider the possibility of toxicologic interactions with the other emitted gases. Alternatively, if we were to establish a health-based emission standard for one of the acid gases as a surrogate for the others, in addition to the above considerations, we would need to demonstrate, based on a knowledge of the effectiveness of scrubbers for controlling each of the acid gases, that the surrogate emission standard effectively ensures that ambient levels of each of the other acid gases do not exceed their respective chronic health thresholds.

EPA also solicits comments on whether there would be an additive effect if individual section 112(d)(4) standards are established for each acid gas, and if so, how we would simulate that effect. Individual acid gas standards under section 112(d)(4) would likely be established using the hazard quotient (HQ) approach, under which we would develop the ratio of the maximum ambient level to the chronic threshold. However, this approach would not by itself account for potential toxicologic interactions. Since all of the acid gases are respiratory irritants, one way to account for potential toxicologic interactions of these pollutants would be the use of the hazard index (HI) approach, as described in EPA's "Guideline for the Health Risk Assessment of Chemical Mixtures." EPA requests comment on that approach, and on whether there are any other approaches to address such additive effects.

Additionally, EPA requests comment on whether we should consider the affected sources (boilers) by themselves, or whether we should consider all HAP emissions at the facility when developing a 112(d)(4) standard. Given that section 112(d)(4) requires an "ample margin of safety," EPA believes it should consider all reasonable circumstances in order to ensure such a margin. Since boilers are, in many cases, located at industrial sites with significant additional sources of HAP (e.g., petroleum refineries, furniture manufacturers, etc.), EPA requests comment on how we should consider the potential interactions of acid gases with other emitted respiratory irritants at these locations if we were to develop emission limits under section 112(d)(4). Commenters are requested to provide any actual data that is available to make this type of demonstration. If no data are available, we request comment on whether such a demonstration could be made using a bounding calculation.

EPA also requests comment on whether we should consider HAP emissions from neighboring facilities, and, if so, what the geographic scope of such consideration should be (*e.g.,* 1 km, 3 km, etc.). We note that consideration of emissions from nearby facilities is a more difficult task than consideration of facility-wide emissions, since it requires information on all potential HAP emissions near all of the locations with boilers. Therefore, we request comment on whether such emissions should be considered in setting section 112(d)(4) emissions standards, and if so, how they should be considered. For example, the consideration could be limited in geographic scope (*e.g.,* a radius of 3 km), or could be based on "average" or "high-end" ambient levels of respiratory irritants seen in recent monitoring data or modeled estimates, since site-specific data might not be available on all respiratory irritants.

Further, EPA requests comment on how to appropriately simulate all reasonable facility/exposure situations (*e.g.,* using worst-case facility emissions coupled with worst-case population proximity, average emissions and population, or 90th percentile emissions and population). Such a simulation could be based on a sequential examination of the facilities with the highest-emitting boilers on-site using site-specific data, or it could use screening or bounding methodologies with high-end or worst-case exposure assumptions to remove facilities from a more site-specific examination. We request comment on these and other approaches.

Finally, we considered the fact that setting conventional MACT standards for HCl as well as PM (as a surrogate for metals including manganese) would result in significant reductions in emissions of other pollutants, most notably SO_2, non-condensable PM, and other non-HAP acid gases (*e.g.,* hydrogen bromide) and would likely also result in additional reductions in emissions of mercury and other HAP metals (*e.g.,* selenium). The additional reductions of SO_2 alone attributable to the proposed MACT standard for HCl are estimated to be 340,000 tons per year in the third year following promulgation of the proposed HCl standard. These are substantial reductions with substantial public health benefits. Although MACT standards may directly address only HAPs, not criteria pollutants, Congress did recognize, in the legislative history to section 112(d)(4), that MACT standards would have the collateral benefit of controlling criteria pollutants as well and viewed this as an important benefit of the air toxics program.[20] Therefore, even where EPA concludes a HAP has a health threshold, the Agency may consider such benefits as a factor in determining whether to exercise its discretion under section 112(d)(4).

Given the limitations of the currently available information (i.e., the HAP mix where boilers are located, and the cumulative health impacts from co-located sources), the environmental effects of HCl, and the significant co-benefits of setting a conventional MACT standard for HCl, the Administrator is proposing not to exercise her discretion to use section 112(d)(4).

This conclusion is not contrary to EPA's prior decisions where we found it appropriate to exercise the discretion to invoke the authority in section 112(d)(4) for HCl, since the circumstances in this case differ from previous considerations. Boilers and process heaters differ from the other source categories for which EPA has exercised its authority under section 112(d)(4) in ways that affect consideration of any health threshold for HCl. Commercial and industrial boilers and process heaters are much more likely to be co-located with multiple other sources of HAPs than are pulp and paper mills and lime manufacturing facilities. In addition, boilers and process heaters are often located at facilities in heavily populated urban areas where many other sources of HAPs exist. These factors make an analysis of the health impact of emissions from these sources on the exposed population significantly more complex than for many other source categories, and therefore make it more difficult to establish an ample margin of safety.

Given the particular complexities of this source category (the location of boilers and process heaters near other significant sources of HAP emissions

[20] *See* S. Rep. No. 101–228, 101st Cong. 1st sess. At 172

and the use of HCl as a surrogate for other HAPs), we solicit comment on all of the conclusions in this section, including the way the agency has used 112(d)(4) previously, and in particular whether it would be feasible and appropriate to establish such a standard and, if so, the methodology by which it could be established.

K. How did we select the compliance requirements?

We are proposing testing, monitoring, notification, and recordkeeping requirements that are adequate to assure continuous compliance with the requirement of this proposed rule. These requirements are described in detail in sections IV.K to IV.N. We selected these requirements based upon our determination of the information necessary to ensure that the emission standards and work practices are being followed and that emission control devices and equipment are maintained and operated properly. These proposed requirements ensure compliance with this proposed rule without imposing a significant additional burden for facilities that must implement them.

We are proposing that compliance with the emission limits for PM, HCl, mercury, CO, and D/F be demonstrated by an initial performance test. To ensure continuous compliance with the proposed PM, HCl, and mercury emission limits, this proposed rule would require continuous parameter monitoring of control devices and recordkeeping. Additionally, this proposed rule would require annual performance tests to ensure, on an ongoing basis, that the air pollution control device is operating properly and its performance has not deteriorated. If initial compliance with the mercury and/or HCl emission limits are demonstrated by a fuel analysis performance test, this proposed rule would require fuel analyses monthly, with compliance determined based on an annual average.

We evaluated the feasibility and cost of applying PM CEMS to boilers and process heaters. CEMS have been used in Europe to monitor PM emissions from a variety of industrial sources. Several electric utility companies in the United States have now installed or are planning to install PM CEMS. In recognition of the fact that PM CEMS are commercially available, EPA developed and promulgated Performance Specifications (PS) for PM CEMS (69 FR 1786, January 12, 2004). PS for PM CEMS are established under PS–11 in appendix B to 40 CFR part 60 for evaluating the acceptability of a PM CEM used for determining compliance with the emission standards on a continuous basis. For PM CEM monitoring, capital costs were estimated to be $88,000 per unit and annualized costs were estimated to be $33,000 per unit. We determined that requiring PM CEMS for units with heat input capacity greater or equal to 250 MMBtu/hr and combusting either coal, biomass, or oil is a reasonable monitoring option. We are requesting comment on the application of PM CEMS to boilers and process heaters, and the use of data from such systems for compliance determinations under this proposed rule.

We reviewed cost information for CO CEMS to make the determination on whether to require CO CEMS or conducting annual CO testing to demonstrate continuous compliance with the CO emission limit. In evaluating the available cost information, we determined that requiring CO CEMS for units with heat input capacities greater or equal to 100 MMBtu/hr is reasonable. This proposed rule would require units with heat input capacities less than 100 MMBtu/hr to conduct initial and annual performance (stack) tests.

The majority of test methods that this proposed rule would require for the performance stack tests have been required under many other EPA standards. The only applicable voluntary consensus standard identified is ASTM Method D6784–02 (Ontario Hydro). The majority of emissions tests upon which the proposed emission limits are based were conducted using these test methods.

When a performance test is conducted, we are proposing that parameter operating limits be determined during the tests. Performance tests to demonstrate compliance with any applicable emission limits are either stack tests or fuel analysis or a combination of both.

To ensure continuous compliance with the proposed emission limits and/or operating limits, this proposed rule would require continuous parameter monitoring of control devices and recordkeeping. We selected the following requirements based on reasonable cost, ease of execution, and usefulness of the resulting data to both the owners or operators and EPA for ensuring continuous compliance with the emission limits and/or operating limits.

We are proposing that certain parameters be continuously monitored for the types of control devices commonly used in the industry. These parameters include opacity monitoring except for wet scrubbers; pH, pressure drop and liquid flowrate for wet scrubbers; and sorbent injection rate for dry scrubbers. You must also install a bag leak detection system for fabric filters. If you cannot monitor opacity for control systems with an ESP then you must monitor the secondary current and voltage or total power input for the ESP. These monitoring parameters have been used in other standards for similar industries. The values of these parameters are established during the initial or most recent performance test that demonstrates compliance. These values are your operating limits for the control device.

You would be required to set parameters based on 4-hour block averages during the compliance test, and demonstrate continuous compliance by monitoring 12-hour block average values for most parameters. We selected this averaging period to reflect operating conditions during the performance test to ensure the control system is continuously operating at the same or better level as during a performance test demonstrating compliance with the emission limits.

To demonstrate continuous compliance with the emission and operating limits, you would also need daily records of the quantity, type, and origin of each fuel burned and hours of operation of the affected source. If you are complying with the chlorine fuel input option, you must keep records of the calculations supporting your determination of the chlorine content in the fuel.

If a source elected to demonstrate compliance with the HCl or mercury limit by using fuel which has a statistically lower pollutant content than the emission limit, we are proposing that the source's operating limit is the emission limit of the applicable pollutant. Under this option, a source is not required to conduct performance stack tests. If a source demonstrates compliance with the HCl or mercury limit by using fuel with a statistically higher pollutant content than the applicable emission limit, but performance tests demonstrate that the source can meet the emission limits, then the source's operating limits are the operating limits of the control device (if used) and the fuel pollutant content of the fuel type/mixture burned.

This proposed rule would specify the testing methodology and procedures and the initial and continuous compliance requirements to be used when complying with the fuel analysis options. Fuel analysis tests for total chloride, gross calorific value, mercury, sample collection, and sample

preparation are included in this proposed rule.

If you elect to comply based on fuel analysis, you will be required to statistically analyze, using the z-test, the data to determine the 90th percentile confidence level. It is the 90th percentile confidence level that is required to be used to determine compliance with the applicable emission limit. The statistical approach is required to assist in ensuring continuous compliance by statistically accounting for the inherent variability in the fuel type.

We are proposing that a source be required to recalculate the fuel pollutant content only if it burns a new fuel type or fuel mixture and conduct another performance test if the results of recalculating the fuel pollutant content are higher than the level established during the initial performance test.

For boilers and process heaters with heat input capacities greater or equal to 100 MMBtu/hr, we are proposing that CO be continuously monitored to demonstrate that average CO emissions, on a 30-day rolling average, are at or below the proposed CO limit.

For boilers and process heaters with heat input capacities between 10 and 100 MMBtu/hr, we are proposing that a performance stack test of CO emissions be conducted to demonstrate compliance with the CO emission limit.

L. What alternative compliance provisions are being proposed?

We are proposing that owners and operators of existing affected sources may demonstrate compliance by emissions averaging for units at the affected source that are within a single subcategory.

As part of the EPA's general policy of encouraging the use of flexible compliance approaches where they can be properly monitored and enforced, we are including emissions averaging in this proposed rule. Emissions averaging can provide sources the flexibility to comply in the least costly manner while still maintaining regulation that is workable and enforceable. Emissions averaging would not be applicable to new sources and could only be used between boilers and process heaters in the same subcategory at a particular affected source. Also, owners or operators of existing sources subject to the Industrial Boiler NSPS (40 CFR part 60, subparts Db and Dc) would be required to continue to meet the PM emission standard of that NSPS regardless of whether or not they are using emissions averaging.

Emissions averaging would allow owners and operators of an affected source to demonstrate that the source complies with the proposed emission limits by averaging the emissions from an individual affected unit that is emitting above the proposed emission limits with other affected units at the same facility that are emitting below the proposed emission limits.

This proposed rule includes an emissions averaging compliance alternative because emissions averaging represents an equivalent, more flexible, and less costly alternative to controlling certain emission points to MACT levels. We have concluded that a limited form of averaging could be implemented that would not lessen the stringency of the MACT floor limits and would provide flexibility in compliance, cost and energy savings to owners and operators. We also recognize that we must ensure that any emissions averaging option can be implemented and enforced, will be clear to sources, and most importantly, will be no less stringent than unit by unit implementation of the MACT floor limits.

EPA has concluded that it is permissible to establish within a NESHAP a unified compliance regimen that permits averaging within an affected source across individual affected units subject to the standard under certain conditions. Averaging across affected units is permitted only if it can be demonstrated that the total quantity of any particular HAP that may be emitted by that portion of a contiguous major source that is subject to the NESHAP will not be greater under the averaging mechanism than it could be if each individual affected unit complied separately with the applicable standard. Under this test, the practical outcome of averaging is equivalent to compliance with the MACT floor limits by each discrete unit, and the statutory requirement that the MACT standard reflect the maximum achievable emissions reductions is, therefore, fully effectuated.

In past rulemakings, EPA has generally imposed certain limits on the scope and nature of emissions averaging programs. These limits include: (1) No averaging between different types of pollutants, (2) no averaging between sources that are not part of the same affected source, (3) no averaging between individual sources within a single major source if the individual sources are not subject to the same NESHAP, and (4) no averaging between existing sources and new sources.

This proposed rule would fully satisfy each of these criteria. First, emissions averaging would only be permitted between individual sources at a single existing affected source, and would only be permitted between individual sources subject to the boiler and process heater NESHAP. Further, emissions averaging would not be permitted between two or more different affected sources. Finally, new sources could not use emissions averaging. Accordingly, we have concluded that the averaging of emissions across affected units is consistent with the CAA. In addition, the proposed rule would require each facility that intends to utilize emission averaging to submit an emission averaging plan, which provides additional assurance that the necessary criteria will be followed. In this emission averaging plan, the facility must include the identification of (1) all units in the averaging group, (2) the control technology installed, (3) the process parameter that will be monitored, (4) the specific control technology or pollution prevention measure to be used, (5) the test plan for the measurement of the HAP being averaged, and (6) the operating parameters to be monitored for each control device. Upon receipt, the regulatory authority would not be able to approve an emission averaging plan containing averaging between emissions of different types of pollutants or between sources in different subcategories.

This proposed rule would also exclude new affected sources from the emissions averaging provision. EPA believes emissions averaging is not appropriate for new sources because it is most cost effective to integrate state-of-the-art controls into equipment design and to install the technology during construction of new sources. One reason we allow emissions averaging is to give existing sources flexibility to achieve compliance at diverse points with varying degrees of add-on control already in place in the most cost-effective and technically reasonable fashion. This flexibility is not needed for new sources because they can be designed and constructed with compliance in mind.

With concern about the equivalency of emissions reductions from averaging and non-averaging in mind, we are also proposing under the emission averaging provision caps on the current emissions from each of the sources in the averaging group. The emissions for each unit in the averaging group would be capped at the emission level being achieved on the effective date of the final rule. These caps would ensure that emissions do not increase above the emission levels that sources currently are designed, operated, and maintained to achieve. In the absence of performance tests, in documenting these

caps, these sources will document the type, design, and operating specification of control devices installed on the effective date of the final rule to ensure that existing controls are not removed or operated less efficiently. By including this provision in this proposed rule, we would further ensure that emission averaging results in environmental benefits equivalent to or better than without emission averaging.

In addition, we are proposing that a discount factor of ten percent would be applied when emissions averaging is used. This discount factor will further ensure that averaging will be at least as stringent as the MACT floor limits in the absence of averaging. The EPA is soliciting comment on use of a discount factor and whether ten percent is the appropriate discount factor. The emissions averaging provision would not apply to individual units if the unit shares a common stack with units in other subcategories, because in that circumstance it is not possible to distinguish the emissions from each individual unit.

The emissions averaging provisions in this proposed rule are based in part on the emissions averaging provisions in the Hazardous Organic NESHAP (HON). The legal basis and rational for the HON emissions averaging provisions were provided in the preamble to the final HON (59 FR 19425, April 22, 1994).

M. How did EPA determine compliance times for the proposed rule?

Section 112 of the CAA specifies the dates by which affected sources must comply with the emission standards. New or reconstructed units must be in compliance with this proposed rule immediately upon startup or [DATE THE FINAL RULE IS PUBLISHED IN THE FEDERAL REGISTER], whichever is later. Existing sources are allowed 3 years to comply with the final rule. This is the maximum period allowed by the CAA. We believe that 3 years for compliance is necessary to allow adequate time to design, install and test control systems that will be retrofitted onto existing boilers, as well as obtain permits for the use of add-on controls.

N. How did EPA determine the required records and reports for this proposed rule?

You would be required to comply with the applicable requirements in the NESHAP General Provisions, subpart A of 40 CFR part 63, as described in Table 10 of the proposed subpart DDDDD. We evaluated the General Provisions requirements and included those we determined to be the minimum notification, recordkeeping, and reporting necessary to ensure compliance with, and effective enforcement of, this proposed rule.

We are also requiring that you keep daily records of the total fuel use by each affected source, subject to an emission limit or work practice standard, along with a description of the fuel, the total fuel usage amounts and units of measure, and information on the supplier and original source of the fuel. This information is necessary to ensure that the affected source is complying with the emission limits from the correct subcategory.

We would require additional recordkeeping if you chose to comply with the chlorine or mercury fuel input option. You would need to keep records of the calculations and supporting information used to develop the chlorine or mercury fuel input operating limit.

O. How does this proposed rule affect permits?

The CAA requires that sources subject to this proposed rule be operated pursuant to a permit issued under EPA-approved State operating permit program. The operating permit programs are developed under title V of the CAA and the implementing regulations under 40 CFR parts 70 and 71. If you are operating in the first 3 years of your operating permit, you will need to obtain a revised permit to incorporate this proposed rule. If you are in the last 2 years of your operating permit, you will need to incorporate this proposed rule into the next renewal of your permit.

P. Alternate Standard for Consideration

As discussed above, EPA is proposing a definition of non-hazardous solid waste under RCRA in a concurrent notice. The proposed CAA section 112(d) standards for boilers and process heaters were developed considering that proposed definition of solid waste. Therefore, the emission limits presented in Tables 1 through 5 above are based on subcategories established considering sources that are ICI boilers and process heaters under the proposed definition of solid waste under RCRA. However, the RCRA proposal also identifies and solicits comment on an alternative approach for defining solid waste, under which more units would be considered solid waste incineration units than under the proposed definition. As such, the alternative approach for defining solid waste under RCRA would result in a different, smaller population of units being covered by Boiler MACT. Consistent with EPA's solicitation of comment on an alternative proposed definition of solid waste under RCRA, we calculated MACT floors using emission rates for units that would be ICI boilers and process heaters under that alternative definition, using the same statistical procedures that were used to calculate the standards that are being proposed. Table 6 reflects that calculation of MACT floor limits for the existing source subcategories that would be changed by the alternative definition of solid waste identified in the concurrent RCRA proposal, compared to the proposed definition of solid waste in that proposal. The MACT floor limits for the remaining existing source subcategories (Gas 1, Gas 2, and Liquid) would not change under the alternative definition of solid waste on which EPA is soliciting comment in the concurrent RCRA proposal, and are therefore not included in Table 8 because the MACT floor limits for those subcategories would be the same under the alternative definition of solid waste as under the proposed definition.

TABLE 8—EXISTING MACT FLOOR LIMITS USING THE "ALTERNATIVE APPROACH" UNDER CONSIDERATION AND COMMENT IN THE CONCURRENTLY PROPOSED RCRA RULE

[Pounds per million British thermal units]

Subcategory	Particulate matter (PM)	Hydrogen chloride (HCl)	Mercury (Hg)	Carbon monoxide (CO) (ppm @ 3% oxygen)	Dioxins/ Furans (total TEQ) (ng/dscm) commat; 7% O_2
Existing—Coal Stoker	0.03	0.02	4.0E–06	40	0.003
Existing—Coal Fluidized Bed	0.03	0.02	4.0E–06	50	0.008
Existing—Pulverized Coal	0.03	0.02	4.0E–06	90	0.004

TABLE 8—EXISTING MACT FLOOR LIMITS USING THE "ALTERNATIVE APPROACH" UNDER CONSIDERATION AND COMMENT IN THE CONCURRENTLY PROPOSED RCRA RULE—Continued

[Pounds per million British thermal units]

Subcategory	Particulate matter (PM)	Hydrogen chloride (HCl)	Mercury (Hg)	Carbon monoxide (CO) (ppm @ 3% oxygen)	Dioxins/ Furans (total TEQ) (ng/dscm) commat; 7% O_2
Existing—Biomass Stoker	0.02	0.03	5.0E–07	180	0.00005
Existing—Biomass Fluidized Bed	0.02	0.03	5.0E–07	10,650	0.1
Existing—Biomass Suspension Burner/Dutch Oven	0.02	0.03	5.0E–07	1,060	0.3
Existing—Biomass Fuel Cells	0.02	0.03	5.0E–07	460	0.02

Comparing the emissions limits in Table 1 (based on the proposed definition of solid waste) with those in Table 8 (based on the alternative definition of solid waste), the MACT emission limits for PM and mercury for the biomass subcategories would be less stringent if they are based on the alternative definition of solid waste while the HCl emission limits for the coal and biomass subcategories would be more stringent if they are based on the alternative definition.

The potential emissions reductions if the MACT floor limits are calculated based on the alternative definition of solid waste would be generally lower than the potential emissions reductions for MACT floors based on the proposed definition of solid waste, because 280 fewer boilers and process heaters would be subject to the boiler and process heater MACT standards under the alternative definition. These units would instead be considered CISWI units under the alternative definition of solid waste. For example, mercury emissions reduction would be 7 tons per year based on the alternative definition of solid waste (compared to 8 tons per year based on the proposed definition) and HCl emissions reduction would be 5,100 tons per year based on the alternative definition (compared to 37,000 tons per year based on the proposed definition). Most (181) of the 280 units that would be considered CISWI units under the alternative definition of solid waste proposed under RCRA are biomass-fired boilers or process heaters, with the others being in the coal and liquid fuel subcategories.

The resulting total national cost impact for existing boilers and process heaters of the proposed emission limits based on the alternative definition of solid waste would be 8.0 billion dollars in capital expenditures and 2.4 billion dollars per year in total annual costs. This compares to $9.5 billion in capital costs and $2.9 billion in annual costs under the proposed definition of solid waste in the RCRA proposed rule. Table 9 of this preamble shows the capital and annual cost impacts for each subcategory under the alternative definition of solid waste. Costs include testing and monitoring costs, but not recordkeeping and reporting costs.

TABLE 9—SUMMARY OF CAPITAL AND ANNUAL COSTS FOR EXISTING SOURCES UNDER THE ALTERNATIVE SOLID WASTE DEFINITION

Source	Subcategory	Estimated/ projected number of affected units	Capital costs ($10^6$$)	Annualized cost ($10^6$$/yr)
Existing Units	Coal units	525	3,861	1,508
	Biomass units	239	1,250	317
	Liquid units	791	1,352	417
	Gas (NG/RG) units	11,524	75	259
	Gas (other) units	196	1,476	434
Energy Assessment	ALL	1,551 facilities		24.9

A discussion of the methodology used to estimate cost impacts is presented in "Methodology and Results of Estimating the Cost of Complying with the Industrial, Commercial, and Institutional Boiler and Process Heater NESHAP (2010)" in the Docket.

We are soliciting public comments on the emission limits listed in Table 6 of this preamble, consistent with EPA's solicitation of comments on the alternative definition of solid waste concurrently proposed under RCRA. As explained above, the MACT floor limits proposed today are based on the proposed definition of solid waste under RCRA. However, because EPA is seeking comment on an alternative definition of solid waste under RCRA, the Agency believes it is necessary to also solicit comment on what the MACT floor limits would be based on the universe of sources that would be subject to the boiler and process heater MACT under that alternative definition.

V. Impacts of the Proposed Rule

A. What are the air impacts?

Table 10 of this preamble illustrates, for each basic fuel subcategory, the emissions reductions achieved by the proposed rule (*i.e.,* the difference in emissions between a boiler or process heater controlled to the floor level of control and boilers or process heaters at the current baseline) for new and existing sources. Nationwide emissions of selected HAP (*i.e.,* HCl, HF, mercury, metals, and VOC) will be reduced by 43,000 tons per year for existing units and 15 tons per year for new units. Emissions of HCl will be reduced by 37,000 tons per year for existing units and 9 tons per year for new units. Emissions of mercury will be reduced by 8 tons per year for existing units and 2.6 pounds per year for new units. Emissions of filterable PM will be reduced by 50,100 tons per year for existing units and 130 tons per year for new units. Emissions of non-mercury

metals (*i.e.,* antimony, arsenic, beryllium, cadmium, chromium, cobalt, lead, manganese, nickel, and selenium) will be reduced by 3,200 tons per year for existing units and will be reduced by 0.6 ton per year for new units. In addition, emissions of SO_2 are estimated to be reduced by 340,000 tons per year for existing sources and 500 tons per year for new sources. Emissions of dioxin/furans, on a total mass basis, will be reduced by 722 grams per year for existing units and 1 gram per year for new units. A discussion of the methodology used to estimate emissions and emissions reductions is presented in "Estimation of Baseline Emissions and Emissions Reductions for Industrial, Commercial, and Institutional Boilers and Process Heaters (2010)" in the docket.

TABLE 10—SUMMARY OF EMISSIONS REDUCTIONS FOR EXISTING AND NEW SOURCES

[Tons/yr]

Source	Subcategory	HCl	PM	Non mercury metals [a]	Mercury	VOC
Existing Units	Coal units	35,450	17,000	770	7.1	490
	Biomass units	520	22,500	230	0.2	760
	Liquid units	840	10,400	2,200	0.00005	290
	Gas 1 (NG/RG) units	9	130	1.2	0.01	72
	Gas 2 (other) units	220	0	0	0.2	170
New Units	Coal units	0	0	0	0	0
	Biomass units	0	0	0	0	0
	Liquid units	9	130	0.6	0.0007	3
	Gas 1 units	0.01	0.1	0.001	0.000008	0.01
	Gas 2 units	1	4	0.01	0.0006	1

[a] Includes antimony, arsenic, beryllium, cadmium, chromium, cobalt, lead, manganese, nickel, and selenium.

B. What are the water and solid waste impacts?

The EPA estimated the additional water usage that would result from installing wet scrubbers to meet the emission limits for HCl would be 2,400 million gallons per year for existing sources and 200,000 gallons per year for new sources. In addition to the increased water usage, an additional 730 million gallons per year of wastewater would be produced for existing sources and 140,000 gallons per year for new sources. The annual costs of treating the additional wastewater are $4.0 million for existing sources and $774 for new sources. These costs are accounted for in the control costs estimates.

The EPA estimated the additional solid waste that would result from the MACT floor level of control to be 81,000 tons per year for existing sources and 149,800 tons per year for new sources. Solid waste is generated from flyash and dust captured in PM and mercury controls as well as from spent carbon that is injected into exhaust streams or used to filter gas streams. The costs of handling the additional solid waste generated are $3.4 million for existing sources and $6.3 million for new sources. These costs are also accounted for in the control costs estimates.

A discussion of the methodology used to estimate impacts is presented in "Estimation of Impacts for Industrial, Commercial, and Institutional Boilers and Process Heaters NESHAP (2010)" in the Docket.

C. What are the energy impacts?

The EPA expects an increase of approximately 2.995 million kilowatt hours (kWh) in national annual energy usage as a result of the proposed rule. Of this amount, 2,944 million kWh would be from existing sources and 11 million kWh are estimated from new sources. The increase results from the electricity required to operate control devices, such as wet scrubbers, electrostatic precipitators, and fabric filters which are expected to be installed to meet the proposed rule. Additionally, the EPA expects work practice standards such as boilers tune-ups and combustion controls will improve the efficiency of boilers, resulting in an estimated fuel savings of 42 trillion BTU each year from existing sources and an additional 100,000 million BTU each year. This fuel savings estimate includes only those fuel savings resulting from gas, liquid, and coal fuels and it is based on the assumption that the work practice standards will achieve 1 percent improvement in efficiency.

D. What are the control costs?

To estimate the national cost impacts of the proposed rule for existing sources, we developed average baseline emission factors for each fuel type/control device combination based on the emission data obtained and contained in the Boiler MACT emission database. If a unit reported emission data, we assigned its unit-specific emission data as its baseline emissions. For units that did not report emission data, we assigned the appropriate emission factors to each existing unit in the inventory database, based on the average emission factors for boilers with similar fuel, design, and control devices. We then compared each unit's baseline emission factors to the proposed MACT floor emission limit to determine if control devices were needed to meet the emission limits. The control analysis considered fabric filters, carbon bed adsorbers, and activated carbon injection to be the primary control devices for mercury control, electrostatic precipitators for units meeting mercury limits but requiring additional control to meet the PM limits, wet scrubbers to meet the HCl limits, tune-ups, replacement burners, and combustion controls for CO and organic HAP control, and carbon injection for dioxin/furan control. We identified where one control device could achieve reductions in multiple pollutants, for example a fabric filter was expected to achieve both PM and mercury control in order to avoid overestimating the costs. We also included costs for testing and monitoring requirements contained in the proposed rule. The resulting total national cost impact of the proposed rule is 9.5 billion dollars in capital expenditures and 3.2 billion dollars per year in total annual costs. Considering estimated fuel savings resulting from work practice standards and combustion controls, the total annualized costs are reduced to 2.9 billion dollars. The total capital and annual costs include costs for control devices, work practices, testing and monitoring. Table 11 of this preamble shows the capital and annual

cost impacts for each subcategory. Costs include testing and monitoring costs, but not recordkeeping and reporting costs.

TABLE 11—SUMMARY OF CAPITAL AND ANNUAL COSTS FOR NEW AND EXISTING SOURCES

Source	Subcategory	Estimated/ projected number of affected units	Capital costs ($10^6$$)	Testing and monitoring annualized costs ($10^6$$/yr)	Annualized cost ($10^6$$/yr) (considering fuel savings)
Existing Units	Coal units	578	4,468	62.4	1,619
	Biomass units	420	2,003	35.5	609
	Liquid units	826	1,389	27.4	419
	Gas (NG/RG) units	11,532	75	0	(260)
	Gas (other) units	199	1,554	10.4	459
Energy Assessment	ALL				26
New Units	Coal units	0	0	0	0
	Biomass units	0	0	0	0
	Liquid units	11	12	0.5	6.1
	Gas (NG/RG) units	33	0.2	0	0.01
	Gas (other) units	2	5.5	0.14	1.7

Using Department of Energy projections on fuel expenditures, the number of additional boilers that could be potentially constructed was estimated. The resulting total national cost impact of the proposed rule in the 3rd year is 17 million dollars in capital expenditures and 6.2 million dollars per year in total annual costs, when considering a 1 percent fuel savings.

Potential control device cost savings and increased recordkeeping and reporting costs associated with the emissions averaging provisions in the proposed rule are not accounted for in either the capital or annualized cost estimates.

A discussion of the methodology used to estimate cost impacts is presented in "Methodology and Results of Estimating the Cost of Complying with the Industrial, Commercial, and Institutional Boiler and Process Heater NESHAP (2010)" in the Docket.

E. What are the economic impacts?

The economic impact analysis (EIA) that is included in the RIA shows that the expected prices for industrial sectors could be 0.01 percent higher and domestic production may fall by about 0.01 percent. Because of higher domestic prices imports may rise by 0.01 percent. In addition, impacts to affected energy markets show that prices may rise by 0.04 percent.

Social costs are estimated to also be $2.9 billion in 2008 dollars. This is estimated to be made up of a $0.8 billion loss in domestic consumer surplus, a $2.5 billion loss in domestic producer surplus, a $0.1 billion increase in rest of the world surplus, and a $0.4 billion in net fuel savings not modeled in a way that can be used to attribute it to consumers and producers.

EPA performed a screening analysis for impacts on small entities by comparing compliance costs to sales/revenues (*e.g.,* sales and revenue tests). EPA's analysis found the tests were typically higher than 3 percent for small entities included in the screening analysis. EPA has prepared an Initial Regulatory Flexibility Analysis (IRFA) that discusses alternative regulatory or policy options that minimize the rule's small entity impacts. It includes key information about key results from the Small Business Advocacy Review (SBAR) panel.

Precise job effect estimates cannot be estimated with certainty. Morgenstern *et al.* (2002) identify three economic mechanisms by which pollution abatement activities can indirectly influence jobs:

- Higher production costs raise market prices, higher prices reduce consumption, and employment within an industry falls ("demand effect");
- Pollution abatement activities require additional labor services to produce the same level of output ("cost effect"); and
- Post regulation production technologies may be more or less labor intensive (*i.e.,* more/less labor is required per dollar of output) ("factor-shift effect").

Several empirical studies, including Morgenstern et al. (2002), suggest the net employment decline is zero or economically small (*e.g.,* Cole and Elliot, 2007; Berman and Bui, 2001). However, others show the question has not been resolved in the literature (Henderson, 1996; Greenstone, 2002). Morgenstern's paper uses a six-year panel (U.S. Census data for plant-level prices, inputs (including labor), outputs, and environmental expenditures) to econometrically estimate the production technologies and industry-level demand elasticities. Their identification strategy leverages repeat plant-level observations over time and uses plant-level and year fixed effects (*e.g.,* plant and time dummy variables). After estimating their model, Morgenstern show and compute the change in employment associated with an additional $1 million ($1987) in environmental spending. Their estimates covers four manufacturing industries (pulp and paper, plastics, petroleum, and steel) and Morgenstern, *et al.* present results separately for the cost, factor shift, and demand effects, as well as the net effect. They also estimate and report an industry-wide average parameter that combines the four industry-wide estimates and weighting them by each industry's share of environmental expenditures.

EPA has most often estimated employment changes associated with plant closures due to environmental regulation or changes in output for the regulated industry (EPA, 1999a; EPA, 2000). This analysis goes beyond what EPA has typically done in two ways. First, because the multimarket model provides estimates for changes in output for sectors not directly regulated, we were able to estimate a more comprehensive "demand effect." Secondly, parameters estimated in the Morgenstern paper were used to estimate all three effects ("demand," "cost," and "factor shift"). This transfer of results from the Morgenstern study is uncertain but avoids ignoring the "cost effect" and the "factor-shift effect."

We calculated "demand effect" employment changes by assuming that the number of jobs changes proportionally with multi-market model's simulated output changes. These results were calculated for all

sectors in the EPA model that show a change in output. The total job losses are estimated to be approximately 6,000.

We also calculated a similar "demand effect" estimate that used the Morgenstern paper. To do this, we multiplied the point estimate for the total demand effect (−3.56 jobs per million ($1987) of environmental compliance expenditure) by the total environmental compliance expenditures used in the partial equilibrium model. For example, the job loss estimate is approximately 7,000 jobs (−3.56 × $3.5 billion × 0.60).[21]

We also present the results of using the Morgenstern paper to estimate employment "cost" and "factor-shift" effects (Table 1). Although using the Morgenstern parameters to estimate these "cost" and "factor-shift" employment changes is uncertain, it is helpful to compare the potential job gains from these effects to the job losses associated with the "demand" effect. Table 1 shows that using the Morgenstern point estimates of parameters to estimate the "cost" and "factor shift" employment gains may be greater than the employment losses using either of the two ways of estimating "demand" employment losses. The 95 percent confidence intervals are shown for all of the estimates based on the Morgenstern parameters. As shown, at the 95% confidence level, we cannot be certain if net employment changes are positive or negative.

Although the Morgenstern paper provides additional information about the potential job effects of environmental protection programs, there are several qualifications EPA considered as part of the analysis. First, EPA has used the weighted average parameter estimates for a narrow set of manufacturing industries (pulp and paper, plastics, petroleum, and steel). Absent other data and estimates, this approach seems reasonable and the estimates come from a respected peer-reviewed source. However, EPA acknowledges the proposed rule covers a broader set of industries not considered in original empirical study. By transferring the estimates to other industrial sectors, we make the assumption that estimates are similar in size. In addition, EPA assumes also that Morgenstern et al.'s estimates derived from the 1979–1991 still applicable for policy taking place in 2013, almost 20 years later. Second, the multi-market model only considers near term employment effects in a U.S. economy where production technologies are fixed. As a result, the modeling system places more emphasis on the short term "demand effect" whereas the Morgenstern paper emphasizes other important long term responses. For example, positive job gains associated with "factor shift effects" are more plausible when production choices become more flexible over time and industries can substitute labor for other production inputs. Third, the Morgenstern paper estimates rely on sector demand elasticities that are different from the demand elasticity parameters used in the multi-market model. As a result, the demand effects are not directly comparable with the demand effects estimated by the multi-market model. Fourth, Morgenstern identifies the industry average as economically and statistically insignificant effect (*i.e.,* the point estimates are small, measured imprecisely, and not distinguishable from zero.) EPA acknowledges this fact and has reported the 95 percent confidence intervals in Table 1. Fifth, Morgenstern's methodology assumes large plants bear most of the regulatory costs. By transferring the estimates, EPA assumes a similar distribution of regulatory costs by plant size and that the regulatory burden does not disproportionately fall on smaller plants.

TABLE 12—EMPLOYMENT CHANGES: 2013

Estimation method	1,000 Jobs
Partial equilibrium model (multiple markets) (demand effect only)	−5
Literature-based estimate (net effect [A + B + C below])	+3 (−6 to +12)
A. Literature-based estimate: Demand effect	−7 (−15 to +1)
B. Literature-based estimate: Cost effect	+5 (+2 to +8)
C. Literature-based estimate: Factor shift effect	+5 (0 to +10)

NOTE: Totals may not add due to independent rounding. 95 percent confidence intervals for literature-based estimates are shown in parenthesis.

F. What are the social costs and benefits of this proposed rule?

We estimate the monetized benefits of this proposed regulatory action to be $17 billion to $41 billion (2008$, 3 percent discount rate) in the implementation year (2013). The monetized benefits of the proposed regulatory action at a 7 percent discount rate are $15 billion to $37 billion (2008$). Using alternate relationships between $PM_{2.5}$ and premature mortality supplied by experts, higher and lower benefits estimates are plausible, but most of the expert-based estimates fall between these two estimates.[22] A summary of the monetized benefits estimates at discount rates of 3 percent and 7 percent is in Table 13 of this preamble.

[21] Since Morgenstern's analysis reports environmental expenditures in $1987, we make an inflation adjustment the engineering cost analysis using GDP implicit price deflator (64.76/108.48) = 0.60).

[22] Roman *et al.,* 2008. Expert Judgment Assessment of the Mortality Impact of Changes in Ambient Fine Particulate Matter in the U.S. Environ. Sci. Technol., 42, 7, 2268—2274.

TABLE 13—SUMMARY OF THE MONETIZED BENEFITS ESTIMATES FOR THE PROPOSED BOILER MACT FOR MAJOR SOURCES IN 2013

[Billions of 2008$] [1]

	Estimated emission reductions (tons per year)	Total monetized benefits (3% discount rate)	Total monetized benefits (7% discount rate)
$PM_{2.5}$	29,020	$6.6 to $16	$6.0 to $15.
$PM_{2.5}$ Precursors			
SO_2	339,996	$10 to $25	$9.1 to $22.
VOC	1,786	$0.002 to $0.005	$0.002 to $0.005.
Total		$17 to $41	$15 to $37.

[1] All estimates are for the implementation year (2013), and are rounded to two significant figures so numbers may not sum across rows. All fine particles are assumed to have equivalent health effects, but the benefit-per-ton estimates vary between precursors because each ton of precursor reduced has a different propensity to form $PM_{2.5}$. Benefits from reducing hazardous air pollutants (HAPs) are not included.

These benefits estimates represent the total monetized human health benefits for populations exposed to less $PM_{2.5}$ in 2013 from controls installed to reduce air pollutants in order to meet these standards. These estimates are calculated as the sum of the monetized value of avoided premature mortality and morbidity associated with reducing a ton of $PM_{2.5}$ and $PM_{2.5}$ precursor emissions. To estimate human health benefits derived from reducing $PM_{2.5}$ and $PM_{2.5}$ precursor emissions, we utilized the general approach and methodology on the laid out in Fann *et al.* (2009).[23]

To generate the benefit-per-ton estimates, we used a model to convert emissions of direct $PM_{2.5}$ and $PM_{2.5}$ precursors into changes in ambient $PM_{2.5}$ levels and another model to estimate the changes in human health associated with that change in air quality. Finally, the monetized health benefits were divided by the emission reductions to create the benefit-per-ton estimates. Even though we assume that all fine particles have equivalent health effects, the benefit-per-ton estimates vary between precursors because each ton of precursor reduced has a different propensity to form $PM_{2.5}$. For example, SO_X has a lower benefit-per-ton estimate than direct $PM_{2.5}$ because it does not form as much $PM_{2.5}$, thus the exposure would be lower, and the monetized health benefits would be lower.

For context, it is important to note that the magnitude of the PM benefits is largely driven by the concentration response function for premature mortality. Experts have advised EPA to consider a variety of assumptions, including estimates based both on empirical (epidemiological) studies and judgments elicited from scientific experts, to characterize the uncertainty in the relationship between $PM_{2.5}$ concentrations and premature mortality. For this proposed rule we cite two key empirical studies, one based on the American Cancer Society cohort study[24] and the extended Six Cities cohort study.[25] In the RIA for this proposed rule, which is available in the docket, we also include benefits estimates derived from expert judgments and other assumptions.

This analysis does not include the type of detailed uncertainty assessment found in the 2006 $PM_{2.5}$ NAAQS RIA because we lack the necessary air quality input and monitoring data to run the benefits model. However, the 2006 $PM_{2.5}$ NAAQS benefits analysis[26] provides an indication of the sensitivity of our results to various assumptions.

It should be emphasized that the monetized benefits estimates provided above do not include benefits from several important benefit categories, including reducing other air pollutants, ecosystem effects, and visibility impairment. The benefits from reducing carbon monoxide and hazardous air pollutants have not been monetized in this analysis, including reducing 330,000 tons of carbon monoxide, 37,000 tons of HCl, 1,000 tons of HF each year, 7.5 tons of mercury, 3,200 tons of other metals, and 720 grams of dioxins/furans each year. Although we do not have sufficient information or modeling available to provide monetized estimates for this rulemaking, we include a qualitative assessment of the health effects of these air pollutants in the Regulatory Impact Analysis (RIA) for this proposed rule, which is available in the docket.

The social costs of this proposed rulemaking are estimated to be $2.9 billion (2008$) in the implementation year, and the monetized benefits are $17 billion to $41 billion (2008$, 3 percent discount rate) for that same year. The benefits at a 7 percent discount rate are $15 billion to $37 billion (2008$). Thus, net benefits of this rulemaking are estimated at $14 billion to $38 billion (2008$, 3 percent discount rate) and $12 billion to $34 billion (2008$, 7 percent discount rate). EPA believes that the benefits of the proposed rule are likely to exceed the costs even when taking into account the uncertainties in the cost and benefit estimates. A summary of the monetized benefits, social costs, and net benefits at discount rates of 3 percent and 7 percent is in Table 14 of this preamble.

[23] Fann, N., C.M. Fulcher, B.J. Hubbell. 2009. "The influence of location, source, and emission type in estimates of the human health benefits of reducing a ton of air pollution." Air Qual Atmos Health (2009) 2:169–176.

[24] Pope *et al.,* 2002. "Lung Cancer, Cardiopulmonary Mortality, and Long-term Exposure to Fine Particulate Air Pollution." *Journal of the American Medical Association.* 287:1132–1141.

[25] Laden *et al.,* 2006. "Reduction in Fine Particulate Air Pollution and Mortality." *American Journal of Respiratory and Critical Care Medicine.* 173:667–672.

[26] U.S. Environmental Protection Agency, 2006. Final Regulatory Impact Analysis: $PM_{2.5}$ NAAQS. Prepared by Office of Air and Radiation. October. Available on the Internet at *http://www.epa.gov/ttn/ecas/ria.html.*

TABLE 14—SUMMARY OF THE MONETIZED BENEFITS, SOCIAL COSTS, AND NET BENEFITS FOR THE BOILER MACT (MAJOR SOURCES) IN 2013

[Millions of 2008$] [1]

	3% Discount rate	7% Discount rate
Proposed Option		
Total Monetized Benefits [2]	$17 to $41	$15 to $37.
Total Social Costs [3]	$2.9	$2.9.
Net Benefits	$14 to $38	$12 to $34.
Non-monetized Benefits	340,000 tons of carbon monoxide. 37,000 tons of HCl. 1,000 tons of HF. 7.5 tons of mercury. 3,200 tons of other metals. 720 grams of dioxins/furans. Health effects from NO_2 and SO_2 exposure. Ecosystem effects. Visibility impairment.	
Proposed Option with Alternate Solid Waste Definition		
Total Monetized Benefits [2]	$3.1 to $7.7	$2.8 to $6.9.
Total Social Costs [3]	$2.2	$2.2.
Net Benefits	$0.93 to $5.5	$0.64 to $4.7.
Non-monetized Benefits	280,000 tons of carbon monoxide. 5,100 tons of HCl. 1,100 tons of HF. 7.1 tons of mercury. 1,600 tons of other metals. 290 grams of dioxins/furans. Health effects from NO_2 and SO_2 exposure.	
	Ecosystem effects.	
	Visibility impairment.	

[1] All estimates are for the implementation year (2015), and are rounded to two significant figures.

[2] The total monetized benefits reflect the human health benefits associated with reducing exposure to $PM_{2.5}$ through reductions of directly emitted $PM_{2.5}$ and $PM_{2.5}$ precursors such as NO_X and SO_2. It is important to note that the monetized benefits include many but not all health effects associated with $PM_{2.5}$ exposure.

[3] The methodology used to estimate social costs for one year in the multimarket model using surplus changes results in the same social costs for both discount rates.

For more information on the benefits analysis, please refer to the RIA for this rulemaking, which is available in the docket.

VI. Public Participation and Requests for Comment

We request comment on all aspects of this proposed rule.

In 2004 we published a final rule for boilers and process heaters located at major source facilities (69 FR 55218, September 13, 2004). The final rule was vacated and remanded by the Court on June 19, 2007. We are reissuing our proposal, in response to the Court's decisions, in this notice. We received many comments on that vacated rule during its rulemaking and have attempted to take all those comments into account in this action. This proposal includes a variety of changes from the vacated rule, mostly centered on emission limits for the various HAP and subcategories.

During this rulemaking, we conducted outreach to small entities and convened a Small Business Advocacy Review (SBAR) Panel to obtain advice and recommendation of representatives of the small entities that potentially would be subject to the requirements of this proposed rule. As part of the SBAR Panel process we conducted outreach with representatives from various small entities that would be affected by this proposed rule. We met with these small entity representatives (SERs) to discuss the potential rulemaking approaches and potential options to decrease the impact of the rulemaking on their industries/sectors. We distributed outreach materials to the SERs; these materials included background on the rulemaking, possible regulatory approaches, preliminary cost and economic impacts, and possible rulemaking alternatives. We met with SERs from the industries that will be impacted directly by this proposed rule to discuss the outreach materials and receive feedback on the approaches and alternatives detailed in the outreach packet. The Panel received written comments from the SERs following the meeting in response to discussions at the meeting and the questions posed to the SERs by the Agency. The SERs were specifically asked to provide comment on regulatory alternatives that could help to minimize the rule's impact on small businesses.

VII. Relationship of This Proposed Action to Section 112(c)(6) of the CAA

Section 112(c)(6) of the CAA requires EPA to identify categories of sources of seven specified pollutants to assure that sources accounting for not less than 90 percent of the aggregate emissions of each such pollutant are subject to standards under CAA Section 112(d)(2) or 112(d)(4). EPA has identified "Industrial Coal Combustion," "Industrial Oil Combustion," Industrial Wood/Wood Residue Combustion," "Commercial Coal Combustion," "Commercial Oil Combustion," and "Commercial Wood/Wood Residue Combustion" as source categories that emits two of the seven CAA Section 112(c)(6) pollutants: POM and mercury. (The POM emitted is composed of 16 polyaromatic hydrocarbons and extractable organic matter.) In the **Federal Register** notice *Source Category Listing for Section 112(d)(2) Rulemaking Pursuant to Section 112(c)(6) Requirements,* 63 FR 17838, 17849, Table 2 (1998), EPA identified "Industrial Coal Combustion," "Industrial Oil Combustion," "Industrial Wood/Wood Residue Combustion," "Commercial Coal Combustion," "Commercial Oil Combustion," and "Commercial Wood/Wood Residue Combustion" as source category "subject to regulation" for purposes of CAA Section 112(c)(6) with respect to the CAA Section 112(c)(6) pollutants that these units emit.

Specifically, as byproducts of combustion, the formation of POM is effectively reduced by the combustion and post-combustion practices required to comply with the CAA Section 112 standards. Any POM that do form during combustion are further controlled by the various post-combustion controls. The add-on PM control systems (either fabric filter or wet scrubber) and activated carbon injection in the fabric filter-based systems further reduce emissions of these organic pollutants, and also reduce mercury emissions, as is evidenced by performance data. Specifically, the emission tests obtained at currently operating units show that the proposed MACT regulations will reduce mercury emissions by about 86 percent. It is, therefore, reasonable to conclude that POM emissions will be substantially controlled. Thus, while this proposed rule does not identify specific numerical emission limits for POM, emissions of POM are, for the reasons noted below, nonetheless "subject to regulation" for purposes of Section 112(c)(6) of the CAA.

In lieu of establishing numerical emissions limits for pollutants such as POM, we regulate surrogate substances. While we have not identified specific numerical limits for POM, we believe CO serves as an effective surrogate for this HAP, because CO, like POM, is formed as a byproduct of combustion.

Consequently, we have concluded that the emissions limits for CO function as a surrogate for control of POM, such that it is not necessary to propose numerical emissions limits for POM with respect to boilers and process heaters to satisfy CAA Section 112(c)(6).

To further address POM and mercury emissions, this proposed rule also includes an energy assessment provision that encourages modifications to the facility to reduce energy demand that lead to these emissions.

VIII. Statutory and Executive Order Reviews

A. Executive Order 12866, Regulatory Planning and Review

Under Executive Order 12866 (58 FR 51735, October 4, 1993), this action is an "economically significant regulatory action" because it is likely to have an annual effect on the economy of $100 million or more or adversely affect in a material way the economy, a sector of the economy, productivity, competition, jobs, the environment, public health or safety, or State, local, or tribal governments or communities.

Accordingly, EPA submitted this action to the Office of Management and Budget (OMB) for review under EO 12866 and any changes in response to OMB recommendations have been documented in the docket for this action. For more information on the costs and benefits for this rule, please refer to Table 14 of this preamble.

B. Executive Order 13132, Federalism

Executive Order 13132 (64 FR 43255, August 10, 1999), requires EPA to develop an accountable process to ensure "meaningful and timely input by State and local officials in the development of regulatory policies that have federalism implications." "Policies that have federalism implications" is defined in the Executive Order to include regulations that have "substantial direct effects on the States, on the relationship between the national government and the States, or on the distribution of power and responsibilities among the various levels of government.

This proposed rule does not have federalism implications. It will not have substantial direct effects on the States, on the relationship between the national government and the States, or on the distribution of power and responsibilities among the various levels of government, as specified in Executive Order 13132. Thus, Executive Order 13132 does not apply to this proposed rule. In the spirit of Executive Order 13132, and consistent with EPA policy to promote communications between EPA and State and local governments, EPA specifically solicited comment on this proposed rule from State and local officials.

C. Executive Order 13175, Consultation and Coordination With Indian Tribal Governments

Executive Order 13175 (65 FR 67249, November 9, 2000), requires EPA to develop an accountable process to ensure "meaningful and timely input by tribal officials in the development of regulatory policies that have tribal implications." This proposed rule does not have tribal implications, as specified in Executive Order 13175 (65 FR 67249, November 9, 2000). It will not have substantial direct effects on tribal governments, on the relationship between the Federal government and Indian tribes, or on the distribution of power and responsibilities between the Federal government and Indian tribes, as specified in Executive Order 13175. This proposed rule imposes requirements on owners and operators of specified area sources and not tribal governments. We do not know of any industrial, commercial, or institutional boilers owned or operated by Indian tribal governments. However, if there are any, the effect of this proposed rule on communities of tribal governments would not be unique or disproportionate to the effect on other communities. Thus, Executive Order 13175 does not apply to this proposed rule. EPA specifically solicits additional comment on this proposed rule from tribal officials.

D. Executive Order 13045, Protection of Children From Environmental Health Risks and Safety Risks

Executive Order 13045 (62 FR 19885, April 23, 1997) applies to any rule that: (1) Is determined to be "economically significant" as defined under Executive Order 12866, and (2) concerns an environmental health or safety risk that EPA has reason to believe may have a disproportionate effect on children. If the regulatory action meets both criteria, the Agency must evaluate the environmental health or safety effects of this planned rule on children, and explain why this planned regulation is preferable to other potentially effective

and reasonably feasible alternatives considered by the Agency.

This proposed rule is not subject to Executive Order 13045 because the Agency does not believe the environmental health risks or safety risks addressed by this action present a disproportionate risk to children. The reason for this determination is that this proposed rule is based solely on technology performance.

The public is invited to submit comments or identify peer-reviewed studies and data that assess effects of early life exposure to this proposed rule.

E. Unfunded Mandates Reform Act of 1995

Title II of the Unfunded Mandates Reform Act of 1995 (UMRA), Public Law 104–4, establishes requirements for Federal agencies to assess the effects of their regulatory actions on State, local, and tribal governments and the private sector. Under section 202 of the UMRA, we generally must prepare a written statement, including a cost-benefit analysis, for proposed and final rules with "Federal mandates" that may result in expenditures to State, local, and tribal governments, in the aggregate, or to the private sector, of $100 million or more in any 1 year. Before promulgating a rule for which a written statement is needed, section 205 of the UMRA generally requires us to identify and consider a reasonable number of regulatory alternatives and adopt the least costly, most cost-effective or least burdensome alternative that achieves the objectives of the rule. The provisions of section 205 do not apply when they are inconsistent with applicable law. Moreover, section 205 allows us to adopt an alternative other than the least costly, most cost-effective or least burdensome alternative if the Administrator publishes with the final rule an explanation why that alternative was not adopted. Before we establish any regulatory requirements that may significantly or uniquely affect small governments, including tribal governments, we must develop a small government agency plan under section 203 of the UMRA. The plan must provide for notifying potentially affected small governments, enabling officials of affected small governments to have meaningful and timely input in the development of regulatory proposals with significant Federal intergovernmental mandates, and informing, educating, and advising small governments on compliance with the regulatory requirements.

We have determined that this proposed rule contains a Federal mandate that may result in expenditures of $100 million or more for State, local, and Tribal governments, in the aggregate, or the private sector in any 1 year. Accordingly, we have prepared a written statement entitled "Unfunded Mandates Reform Act Analysis for the Proposed Industrial Boilers and Process Heaters NESHAP" under section 202 of the UMRA which is summarized below.

1. Statutory Authority

As discussed in section I of this preamble, the statutory authority for this proposed rulemaking is section 112 of the CAA. Title III of the CAA Amendments was enacted to reduce nationwide air toxic emissions. Section 112(b) of the CAA lists the 188 chemicals, compounds, or groups of chemicals deemed by Congress to be HAP. These toxic air pollutants are to be regulated by NESHAP.

Section 112(d) of the CAA directs us to develop NESHAP which require existing and new major sources to control emissions of HAP using MACT based standards. This NESHAP applies to all industrial, commercial, and institutional boilers and process heaters located at major sources of HAP emissions.

In compliance with section 205(a) of the UMRA, we identified and considered a reasonable number of regulatory alternatives. Additional information on the costs and environmental impacts of these regulatory alternatives is presented in the docket.

The regulatory alternative upon which the proposed rule is based represents the MACT floor for industrial boilers and process heaters and, as a result, it is the least costly and least burdensome alternative.

2. Social Costs and Benefits

The regulatory impact analysis prepared for the proposed rule including the Agency's assessment of costs and benefits, is detailed in the "Regulatory Impact Analysis for the Proposed Industrial Boilers and Process Heaters MACT" in the docket. Based on estimated compliance costs associated with the proposed rule and the predicted change in prices and production in the affected industries, the estimated social costs of the proposed rule are $2.9 billion (2008 dollars).

It is estimated that 3 years after implementation of the proposed rule, HAPs would be reduced by thousands of tons, including reductions in hydrochloric acid, hydrogen fluoride, metallic HAP including mercury, and several other organic HAP from boilers and process heaters. Studies have determined a relationship between exposure to these HAP and the onset of cancer, however, the Agency is unable to provide a monetized estimate of the HAP benefits at this time. In addition, there are significant reductions in $PM_{2.5}$ and in SO_2 that would occur, including 29 thousand tons of $PM_{2.5}$ and 340 thousand tons of SO_2. These reductions occur within 3 years after the implementation of the proposed regulation and are expected to continue throughout the life of the affected sources. The major health effect associated with reducing $PM_{2.5}$ and $PM_{2.5}$ precursors (such as SO_2) is a reduction in premature mortality. Other health effects associated with $PM_{2.5}$ emission reductions include avoiding cases of chronic bronchitis, heart attacks, asthma attacks, and work-lost days (*i.e.,* days when employees are unable to work). While we are unable to monetize the benefits associated with the HAP emissions reductions, we are able to monetize the benefits associated with the $PM_{2.5}$ and SO_2 emissions reductions. For SO_2 and $PM_{2.5}$, we estimated the benefits associated with health effects of PM but were unable to quantify all categories of benefits (particularly those associated with ecosystem and visibility effects). Our estimates of the monetized benefits in 2013 associated with the implementation of the proposed alternative is a range from $17 billion (2008 dollars) to $41 billion (2008 dollars) when using a 3 percent discount rate (or from $15 billion (2008 dollars) to $37 billion (2008 dollars) when using a 7 percent discount rate). This estimate, at a 3 percent discount rate, is about $14 billion (2008 dollars) to $38 billion (2008 dollars) higher than the estimated social costs shown earlier in this section. The general approach used to value benefits is discussed in more detail earlier in this preamble. For more detailed information on the benefits estimated for the proposed rulemaking, refer to the RIA in the docket.

3. Future and Disproportionate Costs

The Unfunded Mandates Act requires that we estimate, where accurate estimation is reasonably feasible, future compliance costs imposed by the proposed rule and any disproportionate budgetary effects. Our estimates of the future compliance costs of the proposed rule are discussed previously in this preamble.

We do not believe that there will be any disproportionate budgetary effects of the proposed rule on any particular areas of the country, State or local governments, types of communities

(*e.g.,* urban, rural), or particular industry segments. See the results of the "Economic Impact Analysis of the Proposed Industrial Boilers and Process Heaters NESHAP," the results of which are discussed previously in this preamble.

4. Effects on the National Economy

The Unfunded Mandates Act requires that we estimate the effect of the proposed rule on the national economy. To the extent feasible, we must estimate the effect on productivity, economic growth, full employment, creation of productive jobs, and international competitiveness of the U.S. goods and services, if we determine that accurate estimates are reasonably feasible and that such effect is relevant and material.

The nationwide economic impact of the proposed rule is presented in the "Economic Impact Analysis for the Industrial Boilers and Process Heaters MACT" in the docket. This analysis provides estimates of the effect of the proposed rule on some of the categories mentioned above. The results of the economic impact analysis are summarized previously in this preamble. The results show that there will be a small impact on prices and output, and little impact on communities that may be affected by the proposed rule. In addition, there should be little impact on energy markets (in this case, coal, natural gas, petroleum products, and electricity). Hence, the potential impacts on the categories mentioned above should be small.

5. Consultation With Government Officials

The Unfunded Mandates Act requires that we describe the extent of the Agency's prior consultation with affected State, local, and tribal officials, summarize the officials' comments or concerns, and summarize our response to those comments or concerns. In addition, section 203 of the UMRA requires that we develop a plan for informing and advising small governments that may be significantly or uniquely impacted by a proposal. Although the proposed rule does not affect any State, local, or Tribal governments, we have consulted with State and local air pollution control officials. We also have held meetings on the proposed rule with many of the stakeholders from numerous individual companies, environmental groups, consultants and vendors, labor unions, and other interested parties. We have added materials to the Air Docket to document these meetings.

In addition, we have determined that the proposed rule contains no regulatory requirements that might significantly or uniquely affect small governments. While some small governments may have some sources affected by the proposed rule, the impacts are not expected to be significant. Therefore, today's proposed rule is not subject to the requirements of section 203 of the UMRA.

F. Regulatory Flexibility Act (RFA), as Amended by the Small Business Regulatory Enforcement Fairness Act of 1996 (SBREFA), 5 U.S.C. 601 et seq.

The RFA generally requires an agency to prepare a regulatory flexibility analysis of any rule subject to notice and comment rulemaking requirements under the Administrative Procedure Act or any other statute unless the agency certifies that the rule will not have a significant economic impact on a substantial number of small entities. Small entities include small businesses, small organizations, and small governmental jurisdictions.

For purposes of assessing the impacts of today's proposed rule on small entities, small entity is defined as: (1) A small business according to Small Business Administration (SBA) size standards by the North American Industry Classification System category of the owning entity. The range of small business size standards for the 40 affected industries ranges from 500 to 1,000 employees, except for petroleum refining and electric utilities. In these latter two industries, the size standard is 1,500 employees and a mass throughput of 75,000 barrels/day or less, and 4 million kilowatt-hours of production or less, respectively; (2) a small governmental jurisdiction that is a government of a city, county, town, school district or special district with a population of less than 50,000; and (3) a small organization that is any not-for-profit enterprise which is independently owned and operated and is not dominant in its field.

Because an initial screening analysis for impact on small entities indicated a likely significant impact for substantial numbers, EPA convened a SBAR Panel to obtain advice and recommendation of representatives of the small entities that potentially would be subject to the requirements of this rule.

(a) Panel Process and Panel Outreach

As required by section 609(b) of the RFA, as amended by SBREFA, EPA also has conducted outreach to small entities and on January 22, 2009 EPA's Small Business Advocacy Chairperson convened a Panel under section 609(b) of the RFA. In addition to the Chair, the Panel consisted of the Director of the Sector Policies and Programs Division within EPA's Office of Air and Radiation, the Chief Counsel for Advocacy of the Small Business Administration, and the Administrator of the Office of Information and Regulatory Affairs within the Office of Management and Budget.

As part of the SBAR Panel process we conducted outreach with representatives from 14 various small entities that would be affected by this rule. The small entity representatives (SERs) included associations representing schools, churches, hotels/motels, wood product facilities and manufacturers of home furnishings. We met with these SERs to discuss the potential rulemaking approaches and potential options to decrease the impact of the rulemaking on their industries/sectors. We distributed outreach materials to the SERs; these materials included background on the rulemaking, possible regulatory approaches, preliminary cost and economic impacts, and possible rulemaking alternatives. The Panel met with SERs from the industries that will be impacted directly by this rule on February 10, 2009 to discuss the outreach materials and receive feedback on the approaches and alternatives detailed in the outreach packet. (EPA also met with SERs on November 13, 2008 for an initial outreach meeting.) The Panel received written comments from the SERs following the meeting in response to discussions at the meeting and the questions posed to the SERs by the Agency. The SERs were specifically asked to provide comment on regulatory alternatives that could help to minimize the rule's impact on small businesses.

(1) Panel Recommendations for Small Business Flexibilities

The Panel recommended that EPA consider and seek comment on a wide range of regulatory alternatives to mitigate the impacts of the rulemaking on small businesses, including those flexibility options described below. The following section summarizes the SBAR Panel recommendations. EPA has proposed provisions consistent with four of the Panel's recommendations.

Consistent with the RFA/SBREFA requirements, the Panel evaluated the assembled materials and small-entity comments on issues related to elements of the IRFA. A copy of the Final Panel Report (including all comments received from SERs in response to the Panel's outreach meeting as well as summaries of both outreach meetings that were held with the SERs is included in the docket for this proposed rule. A summary of the Panel

recommendations is detailed below. As noted above, this proposal includes proposed provisions for all but one of the Panel recommendations.

(a) Work Practice Standards

The panel recommended that EPA consider requiring annual tune-ups, including standardized criteria outlining proper tune-up methods targeted at smaller boiler operators. The panel further recommended that EPA take comment on the efficacy of energy assessments/audits at improving combustion efficiency and the cost of performing the assessments, especially to smaller boiler operators.

A work practice standard, instead of MACT emission limits, may be proposed if it can be justified under section 112(h) of the CAA, that is, it is impracticable to enforce the emission standards due to technical or economic limitations. Work practice standards could reduce fuel use and improve combustion efficiency which would result in reduced emissions.

In general, SERs commented that a regulatory approach to improve combustion efficiency, such as work practice standards, would have positive impacts with respect to the environment and energy use and save on compliance costs. The SERs were concerned with work practice standards that would require energy assessments and implementation of assessment findings. The basis of these concerns rested upon the uncertainty that there is no guarantee that there are available funds to implement a particular assessment's findings.

(b) Subcategorization

The Panel recommended that EPA allow subcategorizations suggested by the SERs, unless EPA finds that a subcategorization is inconsistent with the Clean Air Act.

SERs commented that subcategorization is a key concept that could ensure that like boilers are compared with similar boilers so that MACT floors are more reasonable and could be achieved by all units within a subcategory using appropriate emission reduction strategies. SERs commented that EPA should subcategorize based on fuel type, boiler type, duty cycle, and location.

(c) Health Based Compliance Alternatives (HBCA)

The Panel recommended that EPA adopt the HBCA as a regulatory flexibility option for the Boiler MACT rulemaking. The panel recognized, however, that EPA has concerns about its legal authority to provide an HBCA under the Clean Air Act, and EPA may ultimately determine that this flexibility is inconsistent with the Clean Air Act.

SERs commented that adopting an HBCA would perhaps be the most important step EPA could take to mitigate the serious financial harm the Boiler MACT would otherwise inflict on small entities using solid fuels nationwide and, therefore, HBCA should be a critical component of any future rule to lessen impact on small entities.

(d) Emissions Averaging

The Panel recommended that EPA consider a provision for emission averaging and long averaging times for the proposed emission limits.

SERs commented that a measure EPA should consider to lessen the regulatory burden of complying with Boiler MACT is to allow emissions averaging at sources with multiple regulated units. SERs commented that another approach that can aide small entity compliance is to set longer averaging times (*i.e.,* 30-days or more) rather than looking at a mere 3-run (hour) average for performance. Given the inherent variability in boiler performance, an annual or quarterly averaging period for all HAP would prevent a single spike in emissions from throwing a unit into non-compliance.

(e) Compliance Costs

The Panel recommended that EPA carefully weigh the potential burden of compliance requirements and consider for small entities options such as, emission averaging within facility, reduced monitoring/testing requirements, or allowing more time for compliance.

SERs noted that recordkeeping activities, as written in the vacated boiler MACT, would be especially challenging for small entities that do not have a dedicated environmental affairs department.

G. Paperwork Reduction Act

The information collection requirements in the proposed rule will be submitted for approval to the Office of Management and Budget under the *Paperwork Reduction Act,* 44 U.S.C. 3501 *et seq.* An Information Collection Request (ICR) document has been prepared by EPA (ICR No. 2028.05).

The information requirements are based on notification, recordkeeping, and reporting requirements in the NESHAP General Provisions (40 CFR part 63, subpart A), which are mandatory for all operators subject to national emission standards. These recordkeeping and reporting requirements are specifically authorized by section 114 of the CAA (42 U.S.C. 7414). All information submitted to EPA pursuant to the recordkeeping and reporting requirements for which a claim of confidentiality is made is safeguarded according to Agency policies set forth in 40 CFR part 2, subpart B.

The proposed rule would require maintenance inspections of the control devices but would not require any notifications or reports beyond those required by the General Provisions. The recordkeeping requirements require only the specific information needed to determine compliance.

The annual monitoring, reporting, and recordkeeping burden for this collection (averaged over the first 3 years after the effective date of the standards) is estimated to be $87.6 million. This includes 208,832 labor hours per year at a total labor cost of $19.8 million per year, and total non-labor capital costs of $67.8 million per year. This estimate includes initial and annual performance test, conducting and documenting an energy assessment, conducting and documenting a tune-up, semiannual excess emission reports, maintenance inspections, developing a monitoring plan, notifications, and recordkeeping. Monitoring, testing, tune-up and energy assessment costs and cost were also included in the cost estimates presented in the control costs impacts estimates in section IV.D of this preamble. The total burden for the Federal government (averaged over the first 3 years after the effective date of the standard) is estimated to be 93,648 hours per year at a total labor cost of $4.9 million per year.

Burden means the total time, effort, or financial resources expended by persons to generate, maintain, retain, or disclose or provide information to or for a Federal agency. This includes the time needed to review instructions; develop, acquire, install, and utilize technology and systems for the purposes of collecting, validating, and verifying information, processing and maintaining information, and disclosing and providing information; adjust the existing ways to comply with any previously applicable instructions and requirements; train personnel to be able to respond to a collection of information; search data sources; complete and review the collection of information; and transmit or otherwise disclose the information.

An Agency may not conduct or sponsor, and a person is not required to respond to, a collection of information unless it displays a currently valid OMB control number. The OMB control

numbers for our regulations are listed in 40 CFR part 9 and 48 CFR chapter 15.

To comment on EPA's need for this information, the accuracy of the provided burden estimates, and any suggested methods for minimizing respondent burden, including the use of automated collection techniques, EPA has established a public docket for this action, which includes this ICR, under Docket ID number EPA–HQ–OAR–2002–0058. Submit any comments related to the ICR to EPA and OMB. *See* **ADDRESSES** section at the beginning of this preamble for where to submit comments to EPA. Send comments to OMB at the Office of Information and Regulatory Affairs, Office of Management and Budget, 725 17th Street, NW., Washington, DC 20503, *Attention:* Desk Office for EPA. Since OMB is required to make a decision concerning the ICR between 30 and 60 days after June 4, 2010, a comment to OMB is best assured of having its full effect if OMB receives it by July 6, 2010. The final rule will respond to any OMB or public comments on the information collection requirements contained in this proposal.

H. National Technology Transfer and Advancement Act

Section 12(d) of the National Technology Transfer and Advancement Act (NTTAA) of 1995 (Pub. L. 104–113; 15 U.S.C. 272 note) directs the EPA to use voluntary consensus standards in their regulatory and procurement activities unless to do so would be inconsistent with applicable law or otherwise impractical. Voluntary consensus standards are technical standards (*e.g.,* materials specifications, test methods, sampling procedures, business practices) developed or adopted by one or more voluntary consensus bodies. The NTTAA directs EPA to provide Congress, through annual reports to the Office of Management and Budget, with explanations when an agency does not use available and applicable voluntary consensus standards.

This rulemaking involves technical standards. The EPA cites the following standards in the proposed rule: EPA Methods 1, 2, 2F, 2G, 3A, 3B, 4, 5, 5D, 17, 19, 26, 26A, 29 of 40 CFR part 60. Consistent with the NTTAA, EPA conducted searches to identify voluntary consensus standards in addition to these EPA methods. No applicable voluntary consensus standards were identified for EPA Methods 2F, 2G, 5D, and 19. The search and review results have been documented and are placed in the docket for the proposed rule.

The three voluntary consensus standards described below were identified as acceptable alternatives to EPA test methods for the purposes of the proposed rule.

The voluntary consensus standard ASME PTC 19–10–1981–Part 10, "Flue and Exhaust Gas Analyses," is cited in the proposed rule for its manual method for measuring the oxygen, carbon dioxide, and carbon monoxide content of exhaust gas. This part of ASME PTC 19–10–1981—Part 10 is an acceptable alternative to Method 3B.

The voluntary consensus standard ASTM D6522–00, "Standard Test Method for the Determination of Nitrogen Oxides, Carbon Monoxide, and Oxygen Concentrations in Emissions from Natural Gas-Fired Reciprocating Engines, Combustion Turbines, Boilers and Process Heaters Using Portable Analyzers" is an acceptable alternative to EPA Method 3A for identifying carbon monoxide and oxygen concentrations for the proposed rule when the fuel is natural gas.

The voluntary consensus standard ASTM Z65907, "Standard Method for Both Speciated and Elemental Mercury Determination," is an acceptable alternative to EPA Method 29 (portion for mercury only) for the purpose of the proposed rule. This standard can be used in the proposed rule to determine the mercury concentration in stack gases for boilers with rated heat input capacities of greater than 250 MMBtu per hour.

In addition to the voluntary consensus standards EPA uses in the proposed rule, the search for emissions measurement procedures identified 15 other voluntary consensus standards. The EPA determined that 13 of these 15 standards identified for measuring emissions of the HAP or surrogates subject to emission standards in the proposed rule were impractical alternatives to EPA test methods for the purposes of the rule. Therefore, EPA does not intend to adopt these standards for this purpose. The reasons for this determination for the 13 methods are discussed below.

The voluntary consensus standard ASTM D3154–00, "Standard Method for Average Velocity in a Duct (Pitot Tube Method)," is impractical as an alternative to EPA Methods 1, 2, 3B, and 4 for the purposes of the proposed rulemaking since the standard appears to lack in quality control and quality assurance requirements. Specifically, ASTM D3154–00 does not include the following: (1) Proof that openings of standard pitot tube have not plugged during the test; (2) if differential pressure gauges other than inclined manometers (*e.g.,* magnehelic gauges) are used, their calibration must be checked after each test series; and (3) the frequency and validity range for calibration of the temperature sensors.

The voluntary consensus standard ASTM D3464–96 (2001), "Standard Test Method Average Velocity in a Duct Using a Thermal Anemometer," is impractical as an alternative to EPA Method 2 for the purposes of the proposed rule primarily because applicability specifications are not clearly defined, *e.g.,* range of gas composition, temperature limits. Also, the lack of supporting quality assurance data for the calibration procedures and specifications, and certain variability issues that are not adequately addressed by the standard limit EPA's ability to make a definitive comparison of the method in these areas.

The voluntary consensus standard ISO 10780:1994, "Stationary Source Emissions–Measurement of Velocity and Volume Flowrate of Gas Streams in Ducts," is impractical as an alternative to EPA Method 2 in the proposed rule. The standard recommends the use of an L-shaped pitot, which historically has not been recommended by EPA. The EPA specifies the S-type design which has large openings that are less likely to plug up with dust.

The voluntary consensus standard, CAN/CSA Z223.2–M86(1999), "Method for the Continuous Measurement of Oxygen, Carbon Dioxide, Carbon Monoxide, Sulphur Dioxide, and Oxides of Nitrogen in Enclosed Combustion Flue Gas Streams," is unacceptable as a substitute for EPA Method 3A since it does not include quantitative specifications for measurement system performance, most notably the calibration procedures and instrument performance characteristics. The instrument performance characteristics that are provided are nonmandatory and also do not provide the same level of quality assurance as the EPA methods. For example, the zero and span/calibration drift is only checked weekly, whereas the EPA methods requires drift checks after each run.

Two very similar voluntary consensus standards, ASTM D5835–95 (2001), "Standard Practice for Sampling Stationary Source Emissions for Automated Determination of Gas Concentration," and ISO 10396:1993, "Stationary Source Emissions: Sampling for the Automated Determination of Gas Concentrations," are impractical alternatives to EPA Method 3A for the purposes of the proposed rule because they lack in detail and quality assurance/quality control requirements. Specifically, these two standards do not

include the following: (1) Sensitivity of the method; (2) acceptable levels of analyzer calibration error; (3) acceptable levels of sampling system bias; (4) zero drift and calibration drift limits, time span, and required testing frequency; (5) a method to test the interference response of the analyzer; (6) procedures to determine the minimum sampling time per run and minimum measurement time; and (7) specifications for data recorders, in terms of resolution (all types) and recording intervals (digital and analog recorders, only).

The voluntary consensus standard ISO 12039:2001, "Stationary Source Emissions—Determination of Carbon Monoxide, Carbon Dioxide, and Oxygen—Automated Methods," is not acceptable as an alternative to EPA Method 3A. This ISO standard is similar to EPA Method 3A, but is missing some key features. In terms of sampling, the hardware required by ISO 12039:2001 does not include a 3-way calibration valve assembly or equivalent to block the sample gas flow while calibration gases are introduced. In its calibration procedures, ISO 12039:2001 only specifies a two-point calibration while EPA Method 3A specifies a three-point calibration. Also, ISO 12039:2001 does not specify performance criteria for calibration error, calibration drift, or sampling system bias tests as in the EPA method, although checks of these quality control features are required by the ISO standard.

The voluntary consensus standard ASME PTC–38–80 R85 (1985), "Determination of the Concentration of Particulate Matter in Gas Streams," is not acceptable as an alternative for EPA Method 5 because ASTM PTC–38–80 is not specific about equipment requirements, and instead presents the options available and the pro's and con's of each option. The key specific differences between ASME PTC–38–80 and the EPA methods are that the ASME standard: (1) Allows in-stack filter placement as compared to the out-of-stack filter placement in EPA Methods 5 and 17; (2) allows many different types of nozzles, pitots, and filtering equipment; (3) does not specify a filter weighing protocol or a minimum allowable filter weight fluctuation as in the EPA methods; and (4) allows filter paper to be only 99 percent efficient, as compared to the 99.95 percent efficiency required by the EPA methods.

The voluntary consensus standard ASTM D3685/D3685M–98, "Test Methods for Sampling and Determination of Particulate Matter in Stack Gases," is similar to EPA Methods 5 and 17, but is lacking in the following areas that are needed to produce quality, representative particulate data: (1) Requirement that the filter holder temperature should be between 120°C and 134°C, and not just "above the acid dew-point;" (2) detailed specifications for measuring and monitoring the filter holder temperature during sampling; (3) procedures similar to EPA Methods 1, 2, 3, and 4, that are required by EPA Method 5; (4) technical guidance for performing the Method 5 sampling procedures, *e.g.,* maintaining and monitoring sampling train operating temperatures, specific leak check guidelines and procedures, and use of reagent blanks for determining and subtracting background contamination; and (5) detailed equipment and/or operational requirements, *e.g.,* component exchange leak checks, use of glass cyclones for heavy particulate loading and/or water droplets, operating under a negative stack pressure, exchanging particulate loaded filters, sampling preparation and implementation guidance, sample recovery guidance, data reduction guidance, and particulate sample calculations input.

The voluntary consensus standard ISO 9096:1992, "Determination of Concentration and Mass Flow Rate of Particulate Matter in Gas Carrying Ducts—Manual Gravimetric Method," is not acceptable as an alternative for EPA Method 5. Although sections of ISO 9096 incorporate EPA Methods 1, 2, and 5 to some degree, this ISO standard is not equivalent to EPA Method 5 for collection of particulate matter. The standard ISO 9096 does not provide applicable technical guidance for performing many of the integral procedures specified in Methods 1, 2, and 5. Major performance and operational details are lacking or nonexistent, and detailed quality assurance/quality control guidance for the sampling operations required to produce quality, representative particulate data (*e.g.,* guidance for maintaining and monitoring train operating temperatures, specific leak check guidelines and procedures, and sample preparation and recovery procedures) are not provided by the standard, as in EPA Method 5. Also, details of equipment and/or operational requirements, such as those specified in EPA Method 5, are not included in the ISO standard, *e.g.,* stack gas moisture measurements, data reduction guidance, and particulate sample calculations.

The voluntary consensus standard CAN/CSA Z223.1–M1977, "Method for the Determination of Particulate Mass Flows in Enclosed Gas Streams," is not acceptable as an alternative for EPA Method 5. Detailed technical procedures and quality control measures that are required in EPA Methods 1, 2, 3, and 4 are not included in CAN/CSA Z223.1. Second, CAN/CSA Z223.1 does not include the EPA Method 5 filter weighing requirement to repeat weighing every 6 hours until a constant weight is achieved. Third, EPA Method 5 requires the filter weight to be reported to the nearest 0.1 mg, while CAN/CSA Z223.1 requires only to the nearest 0.5 mg. Also, CAN/CSA Z223.1 allows the use of a standard pitot for velocity measurement when plugging of the tube opening is not expected to be a problem. Whereas, EPA Method 5 requires an S-shaped pitot.

The voluntary consensus standard EN 1911–1,2,3 (1998), "Stationary Source Emissions-Manual Method of Determination of HCl—Part 1: Sampling of Gases Ratified European Text—Part 2: Gaseous Compounds Absorption Ratified European Text—Part 3: Adsorption Solutions Analysis and Calculation Ratified European Text," is impractical as an alternative to EPA Methods 26 and 26A. Part 3 of this standard cannot be considered equivalent to EPA Method 26 or 26A because the sample absorbing solution (water) would be expected to capture both HCl and chlorine gas, if present, without the ability to distinguish between the two. The EPA Methods 26 and 26A use an acidified absorbing solution to first separate HCl and chlorine gas so that they can be selectively absorbed, analyzed, and reported separately. In addition, in EN 1911 the absorption efficiency for chlorine gas would be expected to vary as the pH of the water changed during sampling.

The voluntary consensus standard EN 13211 (1998), is not acceptable as an alternative to the mercury portion of EPA Method 29 primarily because it is not validated for use with impingers, as in the EPA method, although the method describes procedures for the use of impingers. This European standard is validated for the use of fritted bubblers only and requires the use of a side (split) stream arrangement for isokinetic sampling because of the low sampling rate of the bubblers (up to 3 liters per minute, maximum). Also, only two bubblers (or impingers) are required by EN 13211, whereas EPA Method 29 require the use of six impingers. In addition, EN 13211 does not include many of the quality control procedures of EPA Method 29, especially for the use and calibration of temperature sensors and controllers, sampling train assembly and disassembly, and filter weighing.

Two of the 15 voluntary consensus standards identified in this search were not available at the time the review was conducted for the purposes of the proposed rule because they are under development by a voluntary consensus body: ASME/BSR MFC 13M, "Flow Measurement by Velocity Traverse," for EPA Method 2 (and possibly 1); and ASME/BSR MFC 12M, "Flow in Closed Conduits Using Multiport Averaging Pitot Primary Flowmeters," for EPA Method 2.

Section 63.7520 and Tables 4A through 4D to subpart DDDDD, 40 CFR part 63, list the EPA testing methods included in the proposed rule. Under § 63.7(f) and § 63.8(f) of subpart A of the General Provisions, a source may apply to EPA for permission to use alternative test methods or alternative monitoring requirements in place of any of the EPA testing methods, performance specifications, or procedures.

I. Executive Order 13211, Actions Concerning Regulations That Significantly Affect Energy Supply, Distribution, or Use

Executive Order 13211, (66 FR 28355, May 22, 2001), provides that agencies shall prepare and submit to the Administrator of the Office of Information and Regulatory Affairs, Office of Management and Budget, a Statement of Energy Effects for certain actions identified as significant energy actions. Section 4(b) of Executive Order 13211 defines "significant energy actions" as "any action by an agency (normally published in the **Federal Register**) that promulgates or is expected to lead to the promulgation of a final rule or regulation, including notices of inquiry, advance notices of proposed rulemaking, and notices of proposed rulemaking: (1)(i) That is a significant regulatory action under Executive Order 12866 or any successor order, and (ii) is likely to have a significant adverse effect on the supply, distribution, or use of energy; or (2) that is designated by the Administrator of the Office of Information and Regulatory Affairs as a significant energy action." The proposed rule is not a "significant regulatory action" because it is not likely to have a significant adverse effect on the supply, distribution, or use of energy. The basis for the determination is as follows.

We estimate a 0.14% price increase for the energy sector and a 0.07% percentage change in production. We estimate a 0.18% increase in energy imports. For more information on the estimated energy effects, please refer to the economic impact analysis for the proposed rule. The analysis is available in the public docket.

Therefore, we conclude that the proposed rule when implemented is not likely to have a significant adverse effect on the supply, distribution, or use of energy.

J. Executive Order 12898: Federal Actions To Address Environmental Justice in Minority Populations and Low-Income Populations

Executive Order 12898 (59 FR 7629, February 16, 1994) establishes Federal executive policy on environmental justice (EJ). Its main provision directs Federal agencies, to the greatest extent practicable and permitted by law, to make environmental justice part of their mission by identifying and addressing, as appropriate, disproportionately high and adverse human health or environmental effects of their programs, policies, and activities on minority populations, low-income, and Tribal populations in the United States.

This proposed action establishes national emission standards for new and existing industrial, commercial, institutional boilers and process heaters that combust non-waste materials (i.e. natural gas, process gas, fuel oil, biomass, and coal) and that are located at a major source. The EPA estimates that there are approximately 13,555 units located at 1,608 facilities covered by this rule.

The proposed rule will reduce emissions of all the listed HAP that come from boilers and process heaters. This includes metals (mercury, arsenic, beryllium, cadmium, chromium, lead, manganese, nickel, and selenium), organics (POM, acetaldehyde, acrolein, benzene, dioxins, ethylene dichloride, formaldehyde, and PCB), hydrochloric acid, and hydrofluoric acid. Adverse health effects from these pollutants include cancer, irritation of the lungs, skin, and mucus membranes; effects on the central nervous system, damage to the kidneys, and other acute health disorders. The rule will also result in substantial reductions of criteria pollutants such as carbon monoxide (CO), nitrogen oxides (NO_X), particulate matter (PM), and sulfur dioxide (SO_2). Sulfur dioxide and NO_2 are precursors for the formation of $PM_{2.5}$ and ozone. Reducing these emissions will reduce ozone and $PM_{2.5}$ formation and associated health effects, such as adult premature mortality, chronic and acute bronchitis, asthma, and other respiratory and cardiovascular diseases. (Please refer to the RIA contained in the docket for this rulemaking.)

Pursuant to E.O. 12898 EPA has undertaken to determine the aggregate demographic makeup of the communities near affected sources. This analysis used "proximity-to-a-source" to identify the populations considered to be living near affected sources, such that they have notable exposures to current emissions from these sources. In this approach EPA reviewed the distributions of different socio-demographic groups in the locations of the expected emission reductions from this rule. The review identified those census blocks within a circular distance of 3 miles of affected sources and determined the demographic and socio-economic composition (*e.g.* race, income, education, etc) of these census blocks. The radius of 3 miles (or approximately 5 kilometers) has been used in other demographic analyses focused on areas around potential sources.[27] [28] [29] [30] In addition, air modeling experience has shown that beyond 3 miles the influence of an individual source of emissions can generally be considered to be small, both in absolute terms and relative to the influence of other sources (assuming there are other sources in the area, as is typical in urban areas).

EPA's demographic analysis showed that major source boilers are located in areas where minorities' share of the population living within a three-mile buffer is higher than the national average. For these same areas, the percent of the population below the poverty line is also higher than the national average.[31] Based on the fact that the rule does not allow emission increases, the EPA has determined that the proposed rule will not have disproportionately high and adverse human health or environmental effects on minority, low-income, or Tribal populations. However, to the extent that any minority, low income, or Tribal subpopulation is disproportionately impacted by the current emissions as a result of the proximity of their homes to these sources, that subpopulation also

[27] U.S. GAO (Government Accountability Office). *Demographics of People Living Near Waste Facilities.* Washington DC: Government Printing Office; 1995.

[28] Mohai P, Saha R. "Reassessing Racial and Socio-economic Disparities in Environmental Justice Research". *Demography.* 2006;43(2): 383–399.

[29] Mennis J. "Using Geographic Information Systems to Create and Analyze Statistical Surfaces of Populations and Risk for Environmental Justice Analysis". *Social Science Quarterly,* 2002;83(1):281–297.

[30] Bullard RD, Mohai P, Wright B, Saha R, *et al. Toxic Waste and Race at Twenty 1987–2007.* United Church of Christ. March, 2007.

[31] The results of the demographic analysis are presented in "Review of Environmental Justice Impacts", April 2010, a copy of which is available in the docket.

stands to see increased environmental and health benefit from the emissions reductions called for by this rule.

EPA defines "Environmental Justice" to include meaningful involvement of all people regardless of race, color, national origin, or income with respect to the development, implementation, and enforcement of environmental laws, regulations, and polices. To promote meaningful involvement, EPA has developed a communication and outreach strategy to ensure that interested communities have access to this proposed rule, are aware of its content, and have an opportunity to comment during the comment period. During the comment period, EPA will publicize the rulemaking via EJ newsletters, Tribal newsletters, EJ listservs, and the Internet, including the Office of Policy, Economics, and Innovation's (OPEI) Rulemaking Gateway Web site (*http://yosemite.epa.gov/opei/RuleGate.nsf/*). EPA will also provide general rulemaking fact sheets (*e.g.,* why is this important for my community) for EJ community groups and conduct conference calls with interested communities. In addition, state and federal permitting requirements will provide state and local governments and members of affected communities the opportunity to provide comments on the permit conditions associated with permitting the sources affected by this rulemaking.

List of Subjects in 40 CFR Part 63

Environmental protection, Administrative practice and procedure, Air pollution control, Hazardous substances, Intergovernmental relations, Reporting and recordkeeping requirements.

Dated: April 29, 2010.

Lisa P. Jackson,

Administrator.

For the reasons stated in the preamble, title 40, chapter I, part 63 of the Code of the Federal Regulations is proposed to be amended as follows:

PART 63—[AMENDED]

1. The authority citation for part 63 continues to read as follows:

Authority: 42 U.S.C. 7401, *et seq.*

2. Part 63 is amended by revising subpart DDDDD to read as follows:

Subpart DDDDD—National Emission Standards for Hazardous Air Pollutants for Major Sources: Industrial, Commercial, and Institutional Boilers and Process Heaters

Sec.

What This Subpart Covers

63.7480 What is the purpose of this subpart?
63.7485 Am I subject to this subpart?
63.7490 What is the affected source of this subpart?
63.7491 Are any boilers or process heaters not subject to this subpart?
63.7495 When do I have to comply with this subpart?

Emission Limitations and Work Practice Standards

63.7499 What are the subcategories of boilers and process heaters?
63.7500 What emission limitations, work practice standards, and operating limits must I meet?

General Compliance Requirements

63.7505 What are my general requirements for complying with this subpart?

Testing, Fuel Analyses, and Initial Compliance Requirements

63.7510 What are my initial compliance requirements and by what date must I conduct them?
63.7515 When must I conduct subsequent performance tests or fuel analyses?
63.7520 What stack tests and procedures must I use for the performance tests?
63.7521 What fuel analyses and procedures must I use for the performance tests?
63.7522 Can I use emission averaging to comply with this subpart?
63.7525 What are my monitoring, installation, operation, and maintenance requirements?
63.7530 How do I demonstrate initial compliance with the emission limitations and work practice standards?

Continuous Compliance Requirements

63.7535 How do I monitor and collect data to demonstrate continuous compliance?
63.7540 How do I demonstrate continuous compliance with the emission limitations and work practice standards?
63.7541 How do I demonstrate continuous compliance under the emission averaging provision?

Notifications, Reports, and Records

63.7545 What notifications must I submit and when?
63.7550 What reports must I submit and when?
63.7555 What records must I keep?
63.7560 In what form and how long must I keep my records?

Other Requirements and Information

63.7565 What parts of the General Provisions apply to me?
63.7570 Who implements and enforces this subpart?
63.7575 What definitions apply to this subpart?

Tables to Subpart DDDDD of Part 63

Table 1 to Subpart DDDDD of Part 63—Emission Limits for New or Reconstructed Boilers and Process Heaters
Table 2 to Subpart DDDDD of Part 63—Emission Limits for Existing Boilers and Process Heaters (Units with heat input capacity of 10 million Btu per hour or greater)
Table 3 to Subpart DDDDD of Part 63—Work Practice Standards
Table 4 to Subpart DDDDD of Part 63—Operating Limits for Boilers and Process Heaters
Table 5 to Subpart DDDDD of Part 63—Performance Testing Requirements
Table 6 to Subpart DDDDD of Part 63—Fuel Analysis Requirements
Table 7 to Subpart DDDDD of Part 63—Establishing Operating Limits
Table 8 to Subpart DDDDD of Part 63—Demonstrating Continuous Compliance
Table 9 to Subpart DDDDD of Part 63—Reporting Requirements
Table 10 to Subpart DDDDD of Part 63—Applicability of General Provisions to Subpart DDDDD

What This Subpart Covers

§ 63.7480 What is the purpose of this subpart?

This subpart establishes national emission limitations and work practice standards for hazardous air pollutants (HAP) emitted from industrial, commercial, and institutional boilers and process heaters located at major sources of HAP. This subpart also establishes requirements to demonstrate initial and continuous compliance with the emission limitations and work practice standards.

§ 63.7485 Am I subject to this subpart?

You are subject to this subpart if you own or operate an industrial, commercial, or institutional boiler or process heater as defined in § 63.7575 that is located at, or is part of, a major source of HAP as defined in § 63.2 or § 63.761 (40 CFR part 63, subpart HH, National Emission Standards for Hazardous Air Pollutants from Oil and Natural Gas Production Facilities), except as specified in § 63.7491.

§ 63.7490 What is the affected source of this subpart?

(a) This subpart applies to new, reconstructed, and existing affected sources as described in paragraphs (a)(1) and (2) of this section.

(1) The affected source of this subpart is the collection of all existing industrial, commercial, and institutional boilers and process heaters within a subcategory located at a major source as defined in § 63.7575.

(2) The affected source of this subpart is each new or reconstructed industrial, commercial, or institutional boiler or process heater located at a major source as defined in § 63.7575.

(b) A boiler or process heater is new if you commence construction of the boiler or process heater after June 4, 2010, and you meet the applicability

criteria at the time you commence construction.

(c) A boiler or process heater is reconstructed if you meet the reconstruction criteria as defined in § 63.2, you commence reconstruction after June 4, 2010, and you meet the applicability criteria at the time you commence reconstruction.

(d) A boiler or process heater is existing if it is not new or reconstructed.

§ 63.7491 Are any boilers or process heaters not subject to this subpart?

The types of boilers and process heaters listed in paragraphs (a) through (j) of this section are not subject to this subpart.

(a) An electric utility steam generating unit.

(b) A recovery boiler or furnace covered by 40 CFR part 63, subpart MM.

(c) A boiler or process heater that is used specifically for research and development. This does not include units that provide heat or steam to a process at a research and development facility.

(d) A hot water heater as defined in this subpart.

(e) A refining kettle covered by 40 CFR part 63, subpart X.

(f) An ethylene cracking furnace covered by 40 CFR part 63, subpart YY.

(g) Blast furnace stoves as described in the EPA document, entitled "National Emission Standards for Hazardous Air Pollutants (NESHAP) for Integrated Iron and Steel Plants—Background Information for Proposed Standards," (EPA–453/R–01–005).

(h) Any boiler or process heater specifically listed as an affected source in another standard(s) under 40 CFR part 63.

(i) Temporary boilers as defined in this subpart.

(j) Blast furnace gas fuel-fired boilers and process heaters as defined in this subpart.

§ 63.7495 When do I have to comply with this subpart?

(a) If you have a new or reconstructed boiler or process heater, you must comply with this subpart by [DATE THE FINAL RULE IS PUBLISHED IN THE FEDERAL REGISTER] or upon startup of your boiler or process heater, whichever is later.

(b) If you have an existing boiler or process heater, you must comply with this subpart no later than [3 YEARS AFTER DATE THE FINAL RULE IS PUBLISHED IN THE FEDERAL REGISTER].

(c) If you have an area source that increases its emissions or its potential to emit such that it becomes a major source of HAP, paragraphs (c)(1) and (2) of this section apply to you.

(1) Any new or reconstructed boiler or process heater at the existing source must be in compliance with this subpart upon startup.

(2) Any existing boiler or process heater at the existing source must be in compliance with this subpart within 3 years after the source becomes a major source.

(d) You must meet the notification requirements in § 63.7545 according to the schedule in § 63.7545 and in subpart A of this part. Some of the notifications must be submitted before you are required to comply with the emission limits and work practice standards in this subpart.

Emission Limitations and Work Practice Standards

§ 63.7499 What are the subcategories of boilers and process heaters?

(a) The subcategories of boilers and process heaters are:

(1) Pulverized coal units,

(2) Stokers designed to burn coal,

(3) Fluidized bed units designed to burn coal,

(4) Stokers designed to burn biomass,

(5) Fluidized bed units designed to burn biomass,

(6) Suspension burners/Dutch Ovens designed to burn biomass,

(7) Fuel Cells designed to burn biomass,

(8) Units designed to burn liquid fuel,

(9) Units designed to burn natural gas/refinery gas,

(10) Units designed to burn other gases, and

(11) Metal process furnaces.

(b) Each subcategory is defined in § 63.7575.

§ 63.7500 What emission limits, work practice standards, and operating limits must I meet?

(a) You must meet the requirements in paragraphs (a)(1) and (2) of this section. You must meet these requirements at all times.

(1) You must meet each emission limit and work practice standard in Table 1 through 3 to this subpart that applies to your boiler or process heater, for each boiler or process heater at your source, except as provided under § 63.7522.

(2) You must meet each operating limit in Table 4 to this subpart that applies to your boiler or process heater. If you use a control device or combination of control devices not covered in Table 4 to this subpart, or you wish to establish and monitor an alternative operating limit and alternative monitoring parameters, you must apply to the United States Environmental Protection Agency (EPA) Administrator for approval of alternative monitoring under § 63.8(f).

(b) As provided in § 63.6(g), EPA may approve use of an alternative to the work practice standards in this section.

General Compliance Requirements

§ 63.7505 What are my general requirements for complying with this subpart?

(a) You must be in compliance with the emission limits and operating limits in this subpart. These limits apply to you at all times.

(b) At all times you must operate and maintain any affected source, including associated air pollution control equipment and monitoring equipment, in a manner consistent with safety and good air pollution control practices for minimizing emissions. The general duty to minimize emissions does not require you to make any further efforts to reduce emissions if levels required by this standard have been achieved. Determination of whether such operation and maintenance procedures are being used will be based on information available to the Administrator which may include, but is not limited to, monitoring results, review of operation and maintenance procedures, review of operation and maintenance records, and inspection of the source.

(c) You can demonstrate compliance with the applicable emission limit for HCl or mercury using fuel analysis if the emission rate calculated according to § 63.7530(d) is less than the applicable emission limit. Otherwise, you must demonstrate compliance for HCl or mercury using performance stack testing. You must demonstrate compliance with all other applicable limits using performance stack testing, or the continuous monitoring system (CMS) where applicable.

(d) If you demonstrate compliance with any applicable emission limit through performance stack testing, you must develop a site-specific monitoring plan according to the requirements in paragraphs (d)(1) through (4) of this section. This requirement also applies to you if you petition the EPA Administrator for alternative monitoring parameters under § 63.8(f).

(1) For each CMS required in this section, you must develop, and submit to the permitting authority for approval upon request, a site-specific monitoring plan that addresses paragraphs (d)(1)(i) through (iii) of this section. You must submit this site-specific monitoring plan, if requested, at least 60 days before

your initial performance evaluation of your CMS.

(i) Installation of the CMS sampling probe or other interface at a measurement location relative to each affected process unit such that the measurement is representative of control of the exhaust emissions (*e.g.,* on or downstream of the last control device);

(ii) Performance and equipment specifications for the sample interface, the pollutant concentration or parametric signal analyzer, and the data collection and reduction systems; and

(iii) Performance evaluation procedures and acceptance criteria (*e.g.,* calibrations).

(2) In your site-specific monitoring plan, you must also address paragraphs (d)(2)(i) through (iii) of this section.

(i) Ongoing operation and maintenance procedures in accordance with the general requirements of § 63.8(c)(1)(i) and (ii), (c)(3), and (c)(4)(ii);

(ii) Ongoing data quality assurance procedures in accordance with the general requirements of § 63.8(d); and

(iii) Ongoing recordkeeping and reporting procedures in accordance with the general requirements of § 63.10(c), (e)(1), and (e)(2)(i).

(3) You must conduct a performance evaluation of each CMS in accordance with your site-specific monitoring plan.

(4) You must operate and maintain the CMS in continuous operation according to the site-specific monitoring plan.

Testing, Fuel Analyses, and Initial Compliance Requirements

§ 63.7510 What are my initial compliance requirements and by what date must I conduct them?

(a) For affected sources that elect to demonstrate compliance with any of the emission limits of this subpart through performance stack testing, your initial compliance requirements include conducting performance stack tests according to § 63.7520 and Table 5 to this subpart, conducting a fuel analysis for each type of fuel burned in your boiler or process heater according to § 63.7521 and Table 6 to this subpart, establishing operating limits according to § 63.7530 and Table 7 to this subpart, and conducting CMS performance evaluations according to § 63.7525. For affected sources that burn a single type of fuel, you are exempted from the initial compliance requirements of conducting a fuel analysis for each type of fuel burned in your boiler or process heater according to § 63.7521 and Table 6 to this subpart.

(b) For affected sources that elect to demonstrate compliance with the emission limits for HCl or mercury through fuel analysis, your initial compliance requirement is to conduct a fuel analysis for each type of fuel burned in your boiler or process heater according to § 63.7521 and Table 6 to this subpart and establish operating limits according to § 63.7530 and Table 8 to this subpart.

(c) If your boiler or process heater has a heat input capacity less than 100 MMBtu per hour, your initial compliance demonstration for CO is conducting a performance stack test for CO according to Table 5 to this subpart. If your boiler or process heater has a heat input capacity of 100 MMBtu per hour or greater, your initial compliance demonstration for CO is conducting a performance evaluation of your continuous emission monitoring system for CO according to § 63.7525(a).

(d) If your boiler or process heater has a heat input capacity of 250 MMBtu per hour or greater and combusts coal, biomass, or residual oil, your initial compliance demonstration for PM is conducting a performance evaluation of your continuous emission monitoring system for PM according to § 63.7525(b).

(e) For existing affected sources, you must demonstrate initial compliance no later than 180 days after the compliance date that is specified for your source in § 63.7495 and according to the applicable provisions in § 63.7(a)(2) as cited in Table 10 to this subpart.

(f) If your new or reconstructed affected source commenced construction or reconstruction between June 4, 2010 and [DATE 60 DAYS AFTER PUBLICATION OF THE FINAL RULE IN THE FEDERAL REGISTER], you must demonstrate initial compliance with either the proposed emission limits or the promulgated emission limits no later than 180 days after [DATE 60 DAYS AFTER PUBLICATION OF THE FINAL RULE IN THE FEDERAL REGISTER] or within 180 days after startup of the source, whichever is later, according to § 63.7(a)(2)(ix).

(g) If your new or reconstructed affected source commenced construction or reconstruction between June 4, 2010, and [DATE 60 DAYS AFTER PUBLICATION OF THE FINAL RULE IN THE FEDERAL REGISTER], and you chose to comply with the proposed emission limits when demonstrating initial compliance, you must conduct a second compliance demonstration for the promulgated emission limits within 3 years after [DATE 60 DAYS AFTER PUBLICATION OF THE FINAL RULE IN THE FEDERAL REGISTER] or within 3 years after startup of the affected source, whichever is later.

(h) If your new or reconstructed affected source commences construction or reconstruction after [DATE 60 DAYS AFTER PUBLICATION OF THE FINAL RULE IN THE FEDERAL REGISTER], you must demonstrate initial compliance with the promulgated emission limits no later than 180 days after startup of the source.

§ 63.7515 When must I conduct subsequent performance tests or fuel analyses?

(a) You must conduct all applicable performance tests according to § 63.7520 on an annual basis, unless you follow the requirements listed in paragraphs (b) through (e) of this section. Annual performance tests must be completed between 10 and 12 months after the previous performance test, unless you follow the requirements listed in paragraphs (b) through (e) of this section.

(b) You can conduct performance stack tests less often for a given pollutant if your performance stack tests for the pollutant for at least 3 consecutive years show that your emissions are at or below 75 percent of the emission limit, and if there are no changes in the operation of the affected source or air pollution control equipment that could increase emissions. In this case, you do not have to conduct a performance test for that pollutant for the next 2 years. You must conduct a performance test during the third year and no more than 36 months after the previous performance test. This reduced testing option does not apply to performance stack tests for dioxin/furan. If you elect to demonstrate compliance using emission averaging under § 63.7522, you must continue to conduct performance stack tests annually.

(c) If your boiler or process heater continues to meet the emission limit for the pollutant, you may choose to conduct performance stack tests for the pollutant every third year if your emissions are at or below 75 percent of the emission limit, and if there are no changes in the operation of the affected source or air pollution control equipment that could increase emissions, but each such performance test must be conducted no more than 36 months after the previous performance test. This reduced testing option does not apply to performance stack tests for dioxin/furan. If you elect to demonstrate compliance using emission averaging under § 63.7522, you must continue to conduct performance stack tests annually.

(d) If a performance test shows emissions exceeded 75 percent of the emission limit, you must conduct annual performance tests for that pollutant until all performance tests over a consecutive 3-year period show compliance.

(e) If you are required to meet an applicable work practice standard, you must conduct annual performance tune-ups according to § 63.7520. Each annual tune-up must be conducted between 10 and 12 months after the previous tune-up.

(f) If you demonstrate compliance with the mercury or HCl based on fuel analysis, you must conduct a monthly fuel analysis according to § 63.7521 for each type of fuel burned. If you burn a new type of fuel, you must conduct a fuel analysis before burning the new type of fuel in your boiler or process heater. You must still meet all applicable continuous compliance requirements in § 63.7540.

(g) You must report the results of performance tests (stack test and fuel analyses) within 60 days after the completion of the performance tests. This report must also verify that the operating limits for your affected source have not changed or provide documentation of revised operating parameters established according to § 63.7530 and Table 7 to this subpart, as applicable. The reports for all subsequent performance tests must include all applicable information required in § 63.7550.

§ 63.7520 What stack tests and procedures must I use for the performance tests?

(a) You must conduct all performance tests according to § 63.7(c), (d), (f), and (h). You must also develop a site-specific test plan according to the requirements in § 63.7(c).

(b) You must conduct each performance test according to the requirements in Table 5 to this subpart.

(c) You must conduct each performance stack test under the specific conditions listed in Tables 5 and 7 to this subpart. You must conduct performance stack tests at the maximum normal operating load while burning the type of fuel or mixture of fuels that has the highest content of chlorine and mercury, and you must demonstrate initial compliance and establish your operating limits based on these tests. These requirements could result in the need to conduct more than one performance test.

(d) You must conduct three separate test runs for each performance test required in this section, as specified in § 63.7(e)(3). Each test run must last at least 4 hours.

(e) To determine compliance with the emission limits, you must use the F-Factor methodology and equations in sections 12.2 and 12.3 of EPA Method 19 of appendix A to part 60 of this chapter to convert the measured particulate matter concentrations, the measured HCl concentrations, and the measured mercury concentrations that result from the initial performance test to pounds per million Btu heat input emission rates using F-factors.

§ 63.7521 What fuel analyses and procedures must I use for the performance tests?

(a) You must conduct performance fuel analysis tests according to the procedures in paragraphs (b) through (e) of this section and Table 6 to this subpart, as applicable.

(b) You must develop and submit a site-specific fuel analysis plan to the EPA Administrator for review and approval according to the following procedures and requirements in paragraphs (b)(1) and (2) of this section.

(1) You must submit the fuel analysis plan no later than 60 days before the date that you intend to demonstrate compliance.

(2) You must include the information contained in paragraphs (b)(2)(i) through (vi) of this section in your fuel analysis plan.

(i) The identification of all fuel types anticipated to be burned in each boiler or process heater.

(ii) For each fuel type, the notification of whether you or a fuel supplier will be conducting the fuel analysis.

(iii) For each fuel type, a detailed description of the sample location and specific procedures to be used for collecting and preparing the composite samples if your procedures are different from paragraph (c) or (d) of this section. Samples should be collected at a location that most accurately represents the fuel type, where possible, at a point prior to mixing with other dissimilar fuel types.

(iv) For each fuel type, the analytical methods from Table 6, with the expected minimum detection levels, to be used for the measurement of chlorine or mercury.

(v) If you request to use an alternative analytical method other than those required by Table 6 to this subpart, you must also include a detailed description of the methods and procedures that you are proposing to use. Methods in Table 6 shall be used until the requested alternative is approved.

(vi) If you will be using fuel analysis from a fuel supplier in lieu of site-specific sampling and analysis, the fuel supplier must use the analytical methods required by Table 6 to this subpart.

(c) At a minimum, you must obtain three composite fuel samples for each fuel type according to the procedures in paragraph (c)(1) or (2) of this section.

(1) If sampling from a belt (or screw) feeder, collect fuel samples according to paragraphs (c)(1)(i) and (ii) of this section.

(i) Stop the belt and withdraw a 6-inch wide sample from the full cross-section of the stopped belt to obtain a minimum two pounds of sample. You must collect all the material (fines and coarse) in the full cross-section. You must transfer the sample to a clean plastic bag.

(ii) Each composite sample will consist of a minimum of three samples collected at approximately equal 1-hour intervals during the testing period.

(2) If sampling from a fuel pile or truck, you must collect fuel samples according to paragraphs (c)(2)(i) through (iii) of this section.

(i) For each composite sample, you must select a minimum of five sampling locations uniformly spaced over the surface of the pile.

(ii) At each sampling site, you must dig into the pile to a depth of 18 inches. You must insert a clean flat square shovel into the hole and withdraw a sample, making sure that large pieces do not fall off during sampling.

(iii) You must transfer all samples to a clean plastic bag for further processing.

(d) You must prepare each composite sample according to the procedures in paragraphs (d)(1) through (7) of this section.

(1) You must thoroughly mix and pour the entire composite sample over a clean plastic sheet.

(2) You must break sample pieces larger than 3 inches into smaller sizes.

(3) You must make a pie shape with the entire composite sample and subdivide it into four equal parts.

(4) You must separate one of the quarter samples as the first subset.

(5) If this subset is too large for grinding, you must repeat the procedure in paragraph (d)(3) of this section with the quarter sample and obtain a one-quarter subset from this sample.

(6) You must grind the sample in a mill.

(7) You must use the procedure in paragraph (d)(3) of this section to obtain a one-quarter subsample for analysis. If the quarter sample is too large, subdivide it further using the same procedure.

(e) You must determine the concentration of pollutants in the fuel (mercury and/or chlorine) in units of

pounds per million Btu of each composite sample for each fuel type according to the procedures in Table 6 to this subpart.

§ 63.7522 Can I use emission averaging to comply with this subpart?

(a) As an alternative to meeting the requirements of § 63.7500 for particulate matter, HCl, or mercury on a boiler or process heater-specific basis, if you have more than one existing boiler or process heater in any subcategory located at your facility, you may demonstrate compliance by emission averaging, if your averaged emissions are within 90 percent of the applicable emission limit, according to the procedures in this section.

(b) Separate stack requirements. For a group of two or more existing boilers or process heaters in the same subcategory that each vent to a separate stack, you may average particulate matter, HCl, and mercury emissions to demonstrate compliance with the limits in Table 2 to this subpart if you satisfy the requirements in paragraphs (c), (d), (e), (f), and (g) of this section.

(c) For each existing boiler or process heater in the averaging group, the emission rate achieved during the initial compliance test for the HAP being averaged must not exceed the emission level that was being achieved on [*THE DATE 30 DAYS AFTER PUBLICATION OF THE FINAL RULE IN THE FEDERAL REGISTER*] or the control technology employed during the initial compliance test must not be less effective for the HAP being averaged than the control technology employed on [*THE DATE 30 DAYS AFTER PUBLICATION OF THE FINAL RULE IN THE FEDERAL REGISTER*] .

(d) The averaged emissions rate from the existing boilers and process heaters participating in the emissions averaging option must be in compliance with the limits in Table 2 to this subpart at all times following the compliance date specified in § 63.7495.

(e) You must demonstrate initial compliance according to paragraph (e)(1) or (2) of this section.

(1) You must use Equation 1 of this section to demonstrate that the particulate matter, HCl, and mercury emissions from all existing units participating in the emissions averaging option do not exceed the emission limits in Table 2 to this subpart.

$$AveWeightedEmissions = 0.90 \times \sum_{i=1}^{n} (Er \times Hm) \div \sum_{i=1}^{n} Hm \qquad \text{(Eq. 1)}$$

Where:

Ave Weighted Emissions = Average weighted emissions for particulate matter, HCl, or mercury, in units of pounds per million Btu of heat input.

Er = Emission rate (as calculated according to Table 5 to this subpart for particulate matter, HCl, or mercury or by fuel analysis for HCl or mercury as calculated by the applicable equation in § 63.7530(c)) for unit, i, for particulate matter, HCl, or mercury, in units of pounds per million Btu of heat input.

Hm = Maximum rated heat input capacity of unit, i, in units of million Btu per hour.

n = Number of units participating in the emissions averaging option.

0.90 = Required discount factor.

(2) If you are not capable of monitoring heat input, and the boiler generates steam, you may use Equation 2 of this section as an alternative to using Equation 1 of this section to demonstrate that the particulate matter, HCl, and mercury emissions from all existing units participating in the emissions averaging option do not exceed the emission limits in Table 2 to this subpart.

$$AveWeightedEmissions = 0.90 \times \sum_{i=1}^{n} (Er \times Sm \times Cfi) \div \sum_{i=1}^{n} Sm \times Cfi \qquad \text{(Eq. 2)}$$

Where:

Ave Weighted Emissions = Average weighted emission level for PM, HCl, or mercury, in units of pounds per million Btu of heat input.

Er = Emission rate (as calculated according to Table 5 to this subpart for particulate matter, HCl, or mercury or by fuel analysis for HCl or mercury as calculated by the applicable equation in § 63.7530(c)) for unit, i, for particulate matter, HCl, or mercury, in units of pounds per million Btu of heat input.

Sm = Maximum steam generation by unit, i, in units of pounds.

Cf = Conversion factor, calculated from the most recent compliance test, in units of million Btu of heat input per pounds of steam generated for unit, i.

0.90 = Required discount factor.

(f) You must demonstrate compliance on a monthly basis determined at the end of every month (12 times per year) according to paragraphs (f)(1) through (3) of this section. The first monthly period begins on the compliance date specified in § 63.7495.

(1) For each calendar month, you must use Equation 3 of this section to calculate the monthly average weighted emission rate using the actual heat capacity for each existing unit participating in the emissions averaging option.

$$AveWeightedEmissions = 0.90 \times \sum_{i=1}^{n} (Er \times Hb) \div \sum_{i=1}^{n} Hb \qquad \text{(Eq. 3)}$$

Where:

Ave Weighted Emissions = monthly average weighted emission level for particulate matter, HCl, or mercury, in units of pounds per million Btu of heat input.

Er = Emission rate, (as calculated during the most recent compliance test, (as calculated according to Table 5 to this subpart for particulate matter, HCl, or mercury or by fuel analysis for HCl or mercury as calculated by the applicable equation in § 63.7530(c)) for unit, i, for particulate matter, HCl, or mercury, in units of pounds per million Btu of heat input.

Hb = The average heat input for each calendar month of boiler, i, in units of million Btu.

n = Number of units participating in the emissions averaging option.

0.90 = Required discount factor.

(2) If you are not capable of monitoring heat input, you may use Equation 4 of this section as an alternative to using Equation 3 of this section to calculate the monthly weighted emission rate using the actual steam generation from the units participating in the emissions averaging option.

$$AveWeightedEmissions = 0.90 \times \sum_{i=1}^{n} (Er \times Sa \times Cfi) \div \sum_{i=1}^{n} Sa \times Cfi \qquad \text{(Eq. 4)}$$

Where:

Ave Weighted Emissions = monthly average weighted emission level for PM, HCl, or mercury, in units of pounds per million Btu of heat input.

Er = Emission rate, (as calculated during the most recent compliance test (as calculated according to Table 5 to this subpart for particulate matter, HCl, or mercury or by fuel analysis for HCl or mercury as calculated by the applicable equation in § 63.7530(c)) for unit, i, for particulate matter, HCl, or mercury, in units of pounds per million Btu of heat input.

Sa = Actual steam generation for each calendar month by boiler, i, in units of pounds.

Cf = Conversion factor, as calculated during the most recent compliance test, in units of million Btu of heat input per pounds of steam generated for unit, i.

0.90 = Required discount factor.

(3) Until 12 monthly weighted average emission rates have been accumulated, calculate and report only the monthly average weighted emission rate determined under paragraph (f)(1) or (2) of this section. After 12 monthly weighted average emission rates have been accumulated, for each subsequent calendar month, use Equation 5 of this section to calculate the 12-month rolling average of the monthly weighted average emission rates for the current month and the previous 11 months.

$$Eavg = \sum_{i=1}^{n} ERi \div 12 \qquad \text{(Eq. 5)}$$

Where:

Eavg = 12-month rolling average emission rate, (pounds per million Btu heat input)

ERi = Monthly weighted average, for month "i", (pounds per million Btu heat input)(as calculated by (f)(1) or (2))

(g) You must develop, and submit to the applicable regulatory authority for review and approval upon request, an implementation plan for emission averaging according to the following procedures and requirements in paragraphs (g)(1) through (4).

(1) You must submit the implementation plan no later than 180 days before the date that the facility intends to demonstrate compliance using the emission averaging option.

(2) You must include the information contained in paragraphs (g)(2)(i) through (vii) of this section in your implementation plan for all emission sources included in an emissions average:

(i) The identification of all existing boilers and process heaters in the averaging group, including for each either the applicable HAP emission level or the control technology installed as of [DATE 60 DAYS AFTER PUBLICATION OF THE FINAL RULE IN THE FEDERAL REGISTER] and the date on which you are requesting emission averaging to commence;

(ii) The process parameter (heat input or steam generated) that will be monitored for each averaging group;

(iii) The specific control technology or pollution prevention measure to be used for each emission boiler or process heater in the averaging group and the date of its installation or application. If the pollution prevention measure reduces or eliminates emissions from multiple boilers or process heaters, the owner or operator must identify each boiler or process heater;

(iv) The test plan for the measurement of particulate matter, HCl, or mercury emissions in accordance with the requirements in § 63.7520;

(v) The operating parameters to be monitored for each control system or device consistent with 63.7500 and Table 4, and a description of how the operating limits will be determined;

(vi) If you request to monitor an alternative operating parameter pursuant to § 63.7525, you must also include:

(A) A description of the parameter(s) to be monitored and an explanation of the criteria used to select the parameter(s); and

(B) A description of the methods and procedures that will be used to demonstrate that the parameter indicates proper operation of the control device; the frequency and content of monitoring, reporting, and recordkeeping requirements; and a demonstration, to the satisfaction of the applicable regulatory authority, that the proposed monitoring frequency is sufficient to represent control device operating conditions; and

(vii) A demonstration that compliance with each of the applicable emission limit(s) will be achieved under representative operating conditions.

(3) The regulatory authority shall review and approve or disapprove the plan according to the following criteria:

(i) Whether the content of the plan includes all of the information specified in paragraph (g)(2) of this section; and

(ii) Whether the plan presents sufficient information to determine that compliance will be achieved and maintained.

(4) The applicable regulatory authority shall not approve an emission averaging implementation plan containing any of the following provisions:

(i) Any averaging between emissions of differing pollutants or between differing sources; or

(ii) The inclusion of any emission source other than an existing unit in the same subcategory.

(h) Common stack requirements. For a group of two or more existing affected units, each of which vents through a single common stack, you may average particulate matter, HCl and mercury emissions to demonstrate compliance with the limits in Table 2 to this subpart if you satisfy the requirements in paragraph (i) or (j) of this section.

(i) For a group of two or more existing units in the same subcategory, each of which vents through a common emissions control system to a common stack, that does not receive emissions from units in other subcategories or categories, you may treat such averaging group as a single existing unit for

purposes of this subpart and comply with the requirements of this subpart as if the group were a single unit.

(j) For all other groups of units subject to paragraph (h) of this section, the owner or operator may elect to:

(1) Conduct performance tests according to procedures specified in § 63.7520 in the common stack if affected units from other subcategories vent to the common stack. The emission limits that the group must comply with are determined by the use of equation 6.

$$En = \sum_{i=1}^{n} (ELi \times Hi) \div \sum_{i=1}^{n} Hi \qquad \text{(Eq. 6)}$$

Where:

E_n = HAP emission limit, lb/MMBtu, ppm, or ng/dscm;

EL_i = Appropriate emission limit from Table 2 to this subpart for unit i, in units of lb/MMBtu, ppm or ng/dscm;

H_i = Heat input from unit i, MMBtu;

(2) Conduct performance tests according to procedures specified in § 63.7520 in the common stack. If affected units from nonaffected units vent to the common stack, the units from nonaffected units must be shut down or vented to a different stack during the performance test); and

(3) Meet the applicable operating limit specified in § 63.7540 and Table 8 to this subpart for each emissions control system (except that, if each unit venting to the common stack has an applicable opacity operating limit, then a single continuous opacity monitoring system may be located in the common stack instead of in each duct to the common stack).

(k) Combination requirements. The common stack of a group of two or more existing boilers or process heaters in the same subcategory subject to paragraph (h) of this section may be treated as a separate stack for purposes of paragraph (b) of this section and included in an emissions averaging group subject to paragraph (b) of this section.

§ 63.7525 What are my monitoring, installation, operation, and maintenance requirements?

(a) If your boiler or process heater has a heat input capacity of 100 MMBtu per hour or greater, you must install, operate, and maintain a continuous emission monitoring system (CEMS) for CO and oxygen according to the procedures in paragraphs (a)(1) through (6) of this section by the compliance date specified in § 63.7495. The CO and oxygen shall be monitored at the same location at the outlet of the boiler or process heater.

(1) Each CEMS must be installed, operated, and maintained according to the applicable procedures under Performance Specification (PS) 3 or 4A of 40 CFR part 60, appendix B, and according to the site-specific monitoring plan developed according to § 63.7505(d).

(2) You must conduct a performance evaluation of each CEMS according to the requirements in § 63.8 and according to PS 4A of 40 CFR part 60, appendix B.

(3) Each CEMS must complete a minimum of one cycle of operation (sampling, analyzing, and data recording) for each successive 15-minute period.

(4) The CEMS data must be reduced as specified in § 63.8(g)(2).

(5) You must calculate and record a 30-day rolling average emission rate on a daily basis. A new 30-day rolling average emission rate is calculated as the average of all of the hourly CO emission data for the preceding 30 operating days.

(6) For purposes of calculating data averages, you must use all the data collected during all periods in assessing compliance. Any period for which the monitoring system is out of control and data are not available for required calculations constitutes a deviation from the monitoring requirements.

(b) If your boiler or process heater has a heat input capacity of 250 MMBtu per hour or greater and combusts coal, biomass, or residual oil, you must install, certify, maintain, and operate a CEMS measuring PM emissions discharged to the atmosphere and record the output of the system as specified in paragraphs (b)(1) through (b)(6) of this section.

(1) Each CEMS shall be installed, certified, operated, and maintained according to the requirements in § 63.7540(a)(8).

(2) The initial performance evaluation shall be completed no later than 180 days after the date of initial startup of a new unit or within 180 days of the compliance date for an existing unit, as specified under § 63.7495 of this subpart.

(3) Compliance with the applicable emissions limit shall be determined based on the 24-hour daily (block) average of the hourly arithmetic average emissions concentrations using the continuous monitoring system outlet data. The 24-hour block arithmetic average emission concentration shall be calculated using EPA Reference Method 19 of appendix A of 40 CFR part 60.

(4) Obtain valid CEMS hourly averages for all operating hours on a 30-day rolling average basis. At least two data points per hour shall be used to calculate each 1-hour arithmetic average.

(5) The 1-hour arithmetic averages required shall be expressed in lb/MMBtu and shall be used to calculate the boiler operating day daily arithmetic average emissions.

(6) When PM emissions data are not obtained because of CEMS breakdowns, repairs, calibration checks, and zero and span adjustments, emissions data shall be obtained by using other monitoring systems as approved by the Administrator or EPA Reference Method 19 of appendix A of 40 CFR part 60 to provide, as necessary, valid emissions data for all operating hours per 30-day rolling average.

(c) If you have an applicable opacity operating limit, you must install, operate, certify and maintain each continuous opacity monitoring system (COMS) according to the procedures in paragraphs (c)(1) through (7) of this section by the compliance date specified in § 63.7495.

(1) Each COMS must be installed, operated, and maintained according to PS 1 of 40 CFR part 60, appendix B.

(2) You must conduct a performance evaluation of each COMS according to the requirements in § 63.8 and according to PS 1 of 40 CFR part 60, appendix B.

(3) As specified in § 63.8(c)(4)(i), each COMS must complete a minimum of one cycle of sampling and analyzing for each successive 10-second period and one cycle of data recording for each successive 6-minute period.

(4) The COMS data must be reduced as specified in § 63.8(g)(2).

(5) You must include in your site-specific monitoring plan procedures and acceptance criteria for operating and maintaining each COMS according to the requirements in § 63.8(d). At a minimum, the monitoring plan must include a daily calibration drift assessment, a quarterly performance audit, and an annual zero alignment audit of each COMS.

(6) You must operate and maintain each COMS according to the requirements in the monitoring plan and the requirements of § 63.8(e). You must identify periods the COMS is out of control including any periods that the COMS fails to pass a daily calibration drift assessment, a quarterly performance audit, or an annual zero alignment audit. Any 6-minute period for which the monitoring system is out of control and data are not available for required calculations constitutes a deviation from the monitoring requirements.

(7) You must determine and record all the 6-minute averages (and 1-hour block

averages as applicable) collected for periods during which the COMS is not out of control.

(d) If you have an operating limit that requires the use of a CMS, you must install, operate, and maintain each continuous parameter monitoring system (CPMS) according to the procedures in paragraphs (d)(1) through (5) of this section by the compliance date specified in § 63.7495.

(1) The CPMS must complete a minimum of one cycle of operation for each successive 15-minute period. You must have a minimum of four successive cycles of operation to have a valid hour of data.

(2) Except for monitoring malfunctions, associated repairs, and required quality assurance or control activities (including, as applicable, calibration checks and required zero and span adjustments), you must conduct all monitoring in continuous operation at all times that the unit is operating. A monitoring malfunction is any sudden, infrequent, not reasonably preventable failure of the monitoring to provide valid data. Monitoring failures that are caused in part by poor maintenance or careless operation are not malfunctions.

(3) For purposes of calculating data averages, you must not use data recorded during monitoring malfunctions, associated repairs, out of control periods, or required quality assurance or control activities. You must use all the data collected during all other periods in assessing compliance. Any 15-minute period for which the monitoring system is out-of-control and data are not available for required calculations constitutes a deviation from the monitoring requirements.

(4) You must determine the 3-hour block average of all recorded readings, except as provided in paragraph (c)(3) of this section.

(5) You must record the results of each inspection, calibration, and validation check.

(e) If you have an operating limit that requires the use of a flow measurement device, you must meet the requirements in paragraphs (d) and (e)(1) through (4) of this section.

(1) You must locate the flow sensor and other necessary equipment in a position that provides a representative flow.

(2) You must use a flow sensor with a measurement sensitivity of 2 percent of the flow rate.

(3) You must reduce swirling flow or abnormal velocity distributions due to upstream and downstream disturbances.

(4) You must conduct a flow sensor calibration check at least semiannually.

(f) If you have an operating limit that requires the use of a pressure measurement device, you must meet the requirements in paragraphs (d) and (f)(1) through (6) of this section.

(1) Locate the pressure sensor(s) in a position that provides a representative measurement of the pressure.

(2) Minimize or eliminate pulsating pressure, vibration, and internal and external corrosion.

(3) Use a gauge with a minimum tolerance of 1.27 centimeters of water or a transducer with a minimum tolerance of 1 percent of the pressure range.

(4) Check pressure tap pluggage daily.

(5) Using a manometer, you must check gauge calibration quarterly and transducer calibration monthly.

(6) Conduct calibration checks any time the sensor exceeds the manufacturer's specified maximum operating pressure range or install a new pressure sensor.

(g) If you have an operating limit that requires the use of a pH measurement device, you must meet the requirements in paragraphs (d) and (g)(1) through (3) of this section.

(1) Locate the pH sensor in a position that provides a representative measurement of scrubber effluent pH.

(2) Ensure the sample is properly mixed and representative of the fluid to be measured.

(3) Check the pH meter's calibration on at least two points every 8 hours of process operation.

(h) If you have an operating limit that requires the use of equipment to monitor voltage and secondary amperage (or total power input) of an electrostatic precipitator (ESP), you must use voltage and secondary current monitoring equipment to measure voltage and secondary current to the ESP.

(i) If you have an operating limit that requires the use of equipment to monitor sorbent injection rate (e.g., weigh belt, weigh hopper, or hopper flow measurement device), you must meet the requirements in paragraphs (c) and (i)(1) through (3) of this section.

(1) Locate the device in a position(s) that provides a representative measurement of the total sorbent injection rate.

(2) Install and calibrate the device in accordance with manufacturer's procedures and specifications.

(3) At least annually, calibrate the device in accordance with the manufacturer's procedures and specifications.

(j) If you elect to use a fabric filter bag leak detection system to comply with the requirements of this subpart, you must install, calibrate, maintain, and continuously operate a bag leak detection system as specified in paragraphs (j)(1) through (8) of this section.

(1) You must install and operate a bag leak detection system for each exhaust stack of the fabric filter.

(2) Each bag leak detection system must be installed, operated, calibrated, and maintained in a manner consistent with the manufacturer's written specifications and recommendations and in accordance with the guidance provided in EPA–454/R–98–015, September 1997.

(3) The bag leak detection system must be certified by the manufacturer to be capable of detecting particulate matter emissions at concentrations of 10 milligrams per actual cubic meter or less.

(4) The bag leak detection system sensor must provide output of relative or absolute particulate matter loadings.

(5) The bag leak detection system must be equipped with a device to continuously record the output signal from the sensor.

(6) The bag leak detection system must be equipped with an alarm system that will sound automatically when an increase in relative particulate matter emissions over a preset level is detected. The alarm must be located where it is easily heard by plant operating personnel.

(7) For positive pressure fabric filter systems that do not duct all compartments of cells to a common stack, a bag leak detection system must be installed in each baghouse compartment or cell.

(8) Where multiple bag leak detectors are required, the system's instrumentation and alarm may be shared among detectors.

§ 63.7530 How do I demonstrate initial compliance with the emission limits and work practice standards?

(a) You must demonstrate initial compliance with each emission limit that applies to you by conducting initial performance tests (performance stack tests and fuel analyses) and establishing operating limits, as applicable, according to § 63.7520, paragraph (c) of this section, and Tables 5 and 7 to this subpart.

(b) If you demonstrate compliance through performance stack testing, you must establish each site-specific operating limit in Table 2 to this subpart that applies to you according to the requirements in § 63.7520, Table 7 to this subpart, and paragraph (c)(4) of this section, as applicable. You must also

conduct fuel analyses according to § 63.7521 and establish maximum fuel pollutant input levels according to paragraphs (c)(1) through (3) of this section, as applicable.

(1) You must establish the maximum chlorine fuel input (C_{input}) during the initial performance testing according to the procedures in paragraphs (c)(1)(i) through (iii) of this section.

(i) You must determine the fuel type or fuel mixture that you could burn in your boiler or process heater that has the highest content of chlorine.

(ii) During the performance testing for HCl, you must determine the fraction of the total heat input for each fuel type burned (Q_i) based on the fuel mixture that has the highest content of chlorine, and the average chlorine concentration of each fuel type burned (C_i).

(iii) You must establish a maximum chlorine input level using Equation 7 of this section.

$$Clinpunt = \sum_{i=1}^{n} (Ci \times Qi) \qquad \text{(Eq. 7)}$$

Where:

Cl_{input} = Maximum amount of chlorine entering the boiler or process heater through fuels burned in units of pounds per million Btu.

C_i = Arithmetic average concentration of chlorine in fuel type, i, analyzed according to § 63.7521, in units of pounds per million Btu.

Q_i = Fraction of total heat input from fuel type, i, based on the fuel mixture that has the highest content of chlorine. If you do not burn multiple fuel types during the performance testing, it is not necessary to determine the value of this term. Insert a value of "1" for Q_i.

n = Number of different fuel types burned in your boiler or process heater for the mixture that has the highest content of chlorine.

(2) You must establish the maximum mercury fuel input level ($Mercury_{input}$) during the initial performance testing using the procedures in paragraphs (c)(3)(i) through (iii) of this section.

(i) You must determine the fuel type or fuel mixture that you could burn in your boiler or process heater that has the highest content of mercury.

(ii) During the compliance demonstration for mercury, you must determine the fraction of total heat input for each fuel burned (Q_i) based on the fuel mixture that has the highest content of mercury, and the average mercury concentration of each fuel type burned (HG_i).

(iii) You must establish a maximum mercury input level using Equation 8 of this section.

$$Mercuryinput = \sum_{i=1}^{n} (HGi \times Qi) \qquad \text{(Eq. 8)}$$

Where:

$Mercury_{input}$ = Maximum amount of mercury entering the boiler or process heater through fuels burned in units of pounds per million Btu.

HG_i = Arithmetic average concentration of mercury in fuel type, i, analyzed according to § 63.7521, in units of pounds per million Btu.

Q_i = Fraction of total heat input from fuel type, i, based on the fuel mixture that has the highest mercury content. If you do not burn multiple fuel types during the performance test, it is not necessary to determine the value of this term. Insert a value of "1" for Q_i.

n = Number of different fuel types burned in your boiler or process heater for the mixture that has the highest content of mercury.

(3) You must establish parameter operating limits according to paragraphs (c)(4)(i) through (iv) of this section.

(i) For a wet scrubber, you must establish the minimum scrubber effluent pH, liquid flowrate, and pressure drop as defined in § 63.7575, as your operating limits during the three-run performance test. If you use a wet scrubber and you conduct separate performance tests for particulate matter, HCl, and mercury emissions, you must establish one set of minimum scrubber effluent pH, liquid flowrate, and pressure drop operating limits. The minimum scrubber effluent pH operating limit must be established during the HCl performance test. If you conduct multiple performance tests, you must set the minimum liquid flowrate and pressure drop operating limits at the highest minimum values established during the performance tests.

(ii) For an electrostatic precipitator, you must establish the minimum voltage and secondary current (or total power input), as defined in § 63.7575, as your operating limits during the three-run performance test.

(iii) For a dry scrubber, you must establish the minimum sorbent injection rate for each sorbent, as defined in § 63.7575, as your operating limit during the three-run performance test.

(iv) The operating limit for boilers or process heaters with fabric filters that choose to demonstrate continuous compliance through bag leak detection systems is that a bag leak detection system be installed according to the requirements in § 63.7525, and that each fabric filter must be operated such that the bag leak detection system alarm does not sound more than 5 percent of the operating time during a 6-month period.

(c) If you elect to demonstrate compliance with an applicable emission limit through fuel analysis, you must conduct fuel analyses according to § 63.7521 and follow the procedures in paragraphs (c)(1) through (5) of this section.

(1) If you burn more than one fuel type, you must determine the fuel mixture you could burn in your boiler or process heater that would result in the maximum emission rates of the pollutants that you elect to demonstrate compliance through fuel analysis.

(2) You must determine the 90th percentile confidence level fuel pollutant concentration of the composite samples analyzed for each fuel type using the one-sided z-statistic test described in Equation 9 of this section.

$$P90 = mean + (SD \times t) \qquad \text{(Eq. 9)}$$

Where:

P_{90} = 90th percentile confidence level pollutant concentration, in pounds per million Btu.

mean = Arithmetic average of the fuel pollutant concentration in the fuel samples analyzed according to § 63.7521, in units of pounds per million Btu.

SD = Standard deviation of the pollutant concentration in the fuel samples analyzed according to § 63.7521, in units of pounds per million Btu.

t = t distribution critical value for 90th percentile (0.1) probability for the appropriate degrees of freedom (number of samples minus one) as obtained from a Distribution Critical Value Table.

(3) To demonstrate compliance with the applicable emission limit for HCl, the HCl emission rate that you calculate for your boiler or process heater using Equation 10 of this section must not exceed the applicable emission limit for HCl.

$$HCl = \sum_{i=1}^{n} (C90i \times Qi \times 1.028) \qquad \text{(Eq. 10)}$$

Where:

HCl = HCl emission rate from the boiler or process heater in units of pounds per million Btu.

C_{i90} = 90th percentile confidence level concentration of chlorine in fuel type, i, in units of pounds per million Btu as calculated according to Equation 8 of this section.

Q_i= Fraction of total heat input from fuel type, i, based on the fuel mixture that has the highest content of chlorine. If you do not burn multiple fuel types, it is not necessary to determine the value of this term. Insert a value of "1" for Q_i.

n = Number of different fuel types burned in your boiler or process heater for the mixture that has the highest content of chlorine.

1.028 = Molecular weight ratio of HCl to chlorine.

(4) To demonstrate compliance with the applicable emission limit for mercury, the mercury emission rate that you calculate for your boiler or process heater using Equation 11 of this section must not exceed the applicable emission limit for mercury.

$$Mercury = \sum_{i=1}^{n} (HG90i \times Qi) \qquad \text{(Eq. 11)}$$

Where:

Mercury = Mercury emission rate from the boiler or process heater in units of pounds per million Btu.

HG_{i90} = 90th percentile confidence level concentration of mercury in fuel, i, in units of pounds per million Btu as calculated according to Equation 8 of this section.

Q_i = Fraction of total heat input from fuel type, i, based on the fuel mixture that has the highest mercury content. If you do not burn multiple fuel types, it is not necessary to determine the value of this term. Insert a value of "1" for Q_i.

n = Number of different fuel types burned in your boiler or process heater for the mixture that has the highest mercury content.

(d) If you own or operate an existing unit with a heat input capacity of 10 million Btu per hour or less, you must submit a signed statement in the Notification of Compliance Status report that indicates that you conducted a tune-up of the unit.

(e) You must submit the energy assessment report, along with a signed certification that the assessment is an accurate depiction of your facility.

(f) You must submit the Notification of Compliance Status containing the results of the initial compliance demonstration according to the requirements in § 63.7545(e).

Continuous Compliance Requirements

§ 63.7535 How do I monitor and collect data to demonstrate continuous compliance?

(a) You must monitor and collect data according to this section and the site-specific monitoring plan required by § 63.7505(d).

(b) Except for monitor malfunctions, associated repairs, and required quality assurance or control activities (including, as applicable, calibration checks and required zero and span adjustments), you must monitor continuously (or collect data at all required intervals) at all times that the affected source is operating.

(c) You may not use data recorded during monitoring malfunctions, associated repairs, or required quality assurance or control activities in data averages and calculations used to report emission or operating levels. You must use all the data collected during all other periods in assessing the operation of the control device and associated control system.

§ 63.7540 How do I demonstrate continuous compliance with the emission limits and work practice standards?

(a) You must demonstrate continuous compliance with each emission limit, operating limit, and work practice standard in Tables 1 through 3 to this subpart that applies to you according to the methods specified in Table 8 to this subpart and paragraphs (a)(1) through (10) of this section.

(1) Following the date on which the initial performance test is completed or is required to be completed under §§ 63.7 and 63.7510, whichever date comes first, you must not operate above any of the applicable maximum operating limits or below any of the applicable minimum operating limits listed in Table 4 to this subpart at any times. Operation above the established maximum or below the established minimum operating limits shall constitute a deviation of established operating limits. Operating limits must be confirmed or reestablished during performance tests.

(2) As specified in § 63.7550(c), you must keep records of the type and amount of all fuels burned in each boiler or process heater during the reporting period to demonstrate that all fuel types and mixtures of fuels burned would either result in lower emissions of HCl and mercury, than the applicable emission limit for each pollutant (if you demonstrate compliance through fuel analysis), or result in lower fuel input of chlorine and mercury than the maximum values calculated during the last performance tests (if you demonstrate compliance through performance stack testing).

(3) If you demonstrate compliance with an applicable HCl emission limit through fuel analysis and you plan to burn a new type of fuel, you must recalculate the HCl emission rate using Equation 9 of § 63.7530 according to paragraphs (a)(3)(i) through (iii) of this section.

(i) You must determine the chlorine concentration for any new fuel type in units of pounds per million Btu, based on supplier data or your own fuel analysis, according to the provisions in your site-specific fuel analysis plan developed according to § 63.7521(b).

(ii) You must determine the new mixture of fuels that will have the highest content of chlorine.

(iii) Recalculate the HCl emission rate from your boiler or process heater under these new conditions using Equation 9 of § 63.7530. The recalculated HCl emission rate must be less than the applicable emission limit.

(4) If you demonstrate compliance with an applicable HCl emission limit through performance testing and you plan to burn a new type of fuel or a new mixture of fuels, you must recalculate the maximum chlorine input using Equation 5 of § 63.7530. If the results of recalculating the maximum chlorine input using Equation 5 of § 63.7530 are higher than the maximum chlorine input level established during the previous performance test, then you must conduct a new performance test within 60 days of burning the new fuel type or fuel mixture according to the procedures in § 63.7520 to demonstrate that the HCl emissions do not exceed the emission limit. You must also establish new operating limits based on this performance test according to the procedures in § 63.7530(c).

(5) If you demonstrate compliance with an applicable mercury emission limit through fuel analysis, and you plan to burn a new type of fuel, you must recalculate the mercury emission rate using Equation 11 of § 63.7530 according to the procedures specified in paragraphs (a)(7)(i) through (iii) of this section.

(i) You must determine the mercury concentration for any new fuel type in

units of pounds per million Btu, based on supplier data or your own fuel analysis, according to the provisions in your site-specific fuel analysis plan developed according to § 63.7521(b).

(ii) You must determine the new mixture of fuels that will have the highest content of mercury.

(iii) Recalculate the mercury emission rate from your boiler or process heater under these new conditions using Equation 11 of § 63.7530. The recalculated mercury emission rate must be less than the applicable emission limit.

(6) If you demonstrate compliance with an applicable mercury emission limit through performance testing, and you plan to burn a new type of fuel or a new mixture of fuels, you must recalculate the maximum mercury input using Equation 7 of § 63.7530. If the results of recalculating the maximum mercury input using Equation 7 of § 63.7530 are higher than the maximum mercury input level established during the previous performance test, then you must conduct a new performance test within 60 days of burning the new fuel type or fuel mixture according to the procedures in § 63.7520 to demonstrate that the mercury emissions do not exceed the emission limit. You must also establish new operating limits based on this performance test according to the procedures in § 63.7530(c).

(7) If your unit is controlled with a fabric filter, and you demonstrate continuous compliance using a bag leak detection system, you must initiate corrective action within 1 hour of a bag leak detection system alarm and complete corrective actions as soon as practical, and operate and maintain the fabric filter system such that the alarm does not sound more than 5 percent of the operating time during a 6-month period. You must also keep records of the date, time, and duration of each alarm, the time corrective action was initiated and completed, and a brief description of the cause of the alarm and the corrective action taken. You must also record the percent of the operating time during each 6-month period that the alarm sounds. In calculating this operating time percentage, if inspection of the fabric filter demonstrates that no corrective action is required, no alarm time is counted. If corrective action is required, each alarm shall be counted as a minimum of 1 hour. If you take longer than 1 hour to initiate corrective action, the alarm time shall be counted as the actual amount of time taken to initiate corrective action.

(8) If you are required to install a CEMS according to § 63.7525(a), then you must meet the requirements in paragraphs (a)(8)(i) through (iii) of this section.

(i) You must continuously monitor CO according to §§ 63.7525(a) and 63.7535.

(ii) Maintain a CO emission level below or at your applicable CO standard in Tables 1 or 2 to this subpart at all times.

(iii) Keep records of CO levels according to § 63.7555(b).

(9) The owner or operator of an affected source using a CEMS measuring PM emissions to meet requirements of this subpart shall install, certify, operate, and maintain the CEMS as specified in paragraphs (a)(9)(i) through (a)(9)(iv) of this section.

(i) The owner or operator shall conduct a performance evaluation of the CEMS according to the applicable requirements of § 60.13 of 40 CFR, Performance Specification 11 in appendix B of 40 CFR part 60, and procedure 2 in appendix F of 40 CFR part 60.

(ii) During each PM correlation testing run of the CEMS required by Performance Specification 11 in appendix B of 40 CFR part 60, PM and O2 (or CO2) data shall be collected concurrently (or within a 30- to 60-minute period) by both the CEMS and conducting performance tests using Method 5 or 5B of appendix A–3 of 40 CFR part 60 or Method 17 of appendix A–6 of 40 CFR part 60.

(iii) Quarterly accuracy determinations and daily calibration drift tests shall be performed in accordance with procedure 2 in appendix F of 40 CFR part 60. Relative Response Audits must be performed annually and Response Correlation Audits must be performed every 3 years.

(iv) After December 31, 2011, within 60 days after the date of completing each performance evaluation conducted to demonstrate compliance with this subpart, the owner or operator of the affected facility must submit the test data to EPA by successfully entering the data electronically into EPA's WebFIRE database through EPA's Central Data Exchange. The owner or operator of an affected facility shall enter the test data into EPA's data base using the Electronic Reporting Tool (ERT) or other compatible electronic spreadsheet.

(10) If your boiler or process heater is in either the Gas 1 (NG/RG) or Metal Process Furnace subcategories and have a heat input capacity of 10 million Btu per hour or greater, you must conduct a tune-up of the boiler or process heater annually to demonstrate continuous compliance as specified in paragraphs (a)(10)(i) through (a)(10)(vi) of this section.

(i) Inspect the burner, and clean or replace any components of the burner as necessary;

(ii) Inspect the flame pattern and make any adjustments to the burner necessary to optimize the flame pattern consistent with the manufacturer's specifications;

(iii) Inspect the system controlling the air-to-fuel ratio, and ensure that it is correctly calibrated and functioning properly;

(iv) Minimize total emissions of CO consistent with the manufacturer's specifications;

(v) Measure the concentration in the effluent stream of CO in parts per million, by volume, dry basis (ppmvd), before and after the adjustments are made; and

(vi) Maintain on-site and submit, if requested by the Administrator, an annual report containing the information in paragraphs (a)(10)(vi)(A) through (C) of this section,

(A) The concentrations of CO in the effluent stream in ppmvd, and oxygen in percent dry basis, measured before and after the adjustments of the boiler;

(B) A description of any corrective actions taken as a part of the combustion adjustment; and

(C) The type and amount of fuel used over the 12 months prior to the annual adjustment.

(11) If your boiler or process heater has a heat input capacity of less than 10 million Btu per hour, you must conduct a tune-up of the boiler or process heater biennially to demonstrate continuous compliance as specified in paragraphs (a)(10)(i) through (a)(10)(vi) of this section.

(b) You must report each instance in which you did not meet each emission limit and operating limit in Tables 1 through 4 to this subpart that apply to you. These instances are deviations from the emission limits in this subpart. These deviations must be reported according to the requirements in § 63.7550.

§ 63.7541 How do I demonstrate continuous compliance under the emission averaging provision?

(a) Following the compliance date, the owner or operator must demonstrate compliance with this subpart on a continuous basis by meeting the requirements of paragraphs (a)(1) through (5) of this section.

(1) For each calendar month, demonstrate compliance with the average weighted emissions limit for the existing units participating in the

emissions averaging option as determined in § 63.7522(f) and (g);

(2) You must maintain the applicable opacity limit according to paragraphs (a)(2)(i) through (ii) of this section.

(i) For each existing unit participating in the emissions averaging option that is equipped with a dry control system and not vented to a common stack, maintain opacity at or below the applicable limit.

(ii) For each group of units participating in the emissions averaging option where each unit in the group is equipped with a dry control system and vented to a common stack that does not receive emissions from nonaffected units, maintain opacity at or below the applicable limit at the common stack;

(3) For each existing unit participating in the emissions averaging option that is equipped with a wet scrubber, maintain the 3-hour average parameter values at or below the operating limits established during the most recent performance test; and

(4) For each existing unit participating in the emissions averaging option that has an approved alternative operating plan, maintain the 3-hour average parameter values at or below the operating limits established in the most recent performance test.

(5) For each existing unit participating in the emissions averaging option venting to a common stack configuration containing affected units from other subcategories, maintain the appropriate operating limit for each unit as specified in Table 4 to this subpart that applies.

(b) Any instance where the owner or operator fails to comply with the continuous monitoring requirements in paragraphs (a)(1) through (5) of this section is a deviation.

Notification, Reports, and Records

§ 63.7545 What notifications must I submit and when?

(a) You must submit all of the notifications in §§ 63.7(b) and (c), 63.8 (e), (f)(4) and (6), and 63.9 (b) through (h) that apply to you by the dates specified.

(b) As specified in § 63.9(b)(2), if you startup your affected source before [DATE 60 DAYS AFTER PUBLICATION OF THE FINAL RULE IN THE FEDERAL REGISTER], you must submit an Initial Notification not later than 120 days after [DATE 60 DAYS AFTER PUBLICATION OF THE FINAL RULE IN THE FEDERAL REGISTER].

(c) As specified in § 63.9(b)(4) and (b)(5), if you startup your new or reconstructed affected source on or after [DATE 60 DAYS AFTER PUBLICATION OF THE FINAL RULE IN THE FEDERAL REGISTER], you must submit an Initial Notification not later than 15 days after the actual date of startup of the affected source.

(d) If you are required to conduct a performance test you must submit a Notification of Intent to conduct a performance test at least 30 days before the performance test is scheduled to begin.

(e) If you are required to conduct an initial compliance demonstration as specified in § 63.7530(a), you must submit a Notification of Compliance Status according to § 63.9(h)(2)(ii). For each initial compliance demonstration, you must submit the Notification of Compliance Status, including all performance test results and fuel analyses, before the close of business on the 60th day following the completion of the performance test and/or other initial compliance demonstrations according to § 63.10(d)(2). The Notification of Compliance Status report must contain all the information specified in paragraphs (e)(1) through (9) of this section, as applicable.

(1) A description of the affected source(s) including identification of which subcategory the source is in, the design capacity of the source, a description of the add-on controls used on the source, description of the fuel(s) burned, including whether the fuel(s) were determined by you or EPA through a petition process to be a non-waste under 40 CFR 241.3, whether the fuel(s) were processed from discarded non-hazardous secondary materials within the meaning of 40 CFR 241.3, and justification for the selection of fuel(s) burned during the performance test.

(2) Summary of the results of all performance tests (stack tests and fuel analyses) and calculations conducted to demonstrate initial compliance including all established operating limits.

(3) A summary of the CO emissions monitoring data and the maximum CO emission levels recorded during the performance test to show that you have met any applicable emission standard in Table 1 or 2 to this subpart.

(4) Identification of whether you plan to demonstrate compliance with each applicable emission limit through performance stack testing or fuel analysis.

(5) Identification of whether you plan to demonstrate compliance by emissions averaging.

(6) A signed certification that you have met all applicable emission limits and work practice standards.

(7) If you had a deviation from any emission limit, work practice standard, or operating limit, you must also submit a description of the deviation, the duration of the deviation, and the corrective action taken in the Notification of Compliance Status report.

(f) If you operate a natural gas-fired boiler or process heater that is subject to this subpart, and you intend to use a fuel other than natural gas or equivalent to fire the affected unit, you must submit a notification of alternative fuel use within 48 hours of the declaration of a period of natural gas curtailment or supply interruption, as defined in § 63.7575. The notification must include the information specified in paragraphs (f)(1) through (5) of this section.

(1) Company name and address.

(2) Identification of the affected unit.

(3) Reason you are unable to use natural gas or equivalent fuel, including the date when the natural gas curtailment was declared or the natural gas supply interruption began.

(4) Type of alternative fuel that you intend to use.

(5) Dates when the alternative fuel use is expected to begin and end.

§ 63.7550 What reports must I submit and when?

(a) You must submit each report in Table 9 to this subpart that applies to you.

(b) Unless the EPA Administrator has approved a different schedule for submission of reports under § 63.10(a), you must submit each report by the date in Table 9 to this subpart and according to the requirements in paragraphs (b)(1) through (5) of this section.

(1) The first compliance report must cover the period beginning on the compliance date that is specified for your affected source in § 63.7495 and ending on June 30 or December 31, whichever date is the first date that occurs at least 180 days after the compliance date that is specified for your source in § 63.7495.

(2) The first compliance report must be postmarked or delivered no later than July 31 or January 31, whichever date is the first date following the end of the first calendar half after the compliance date that is specified for your source in § 63.7495.

(3) Each subsequent compliance report must cover the semiannual reporting period from January 1 through June 30 or the semiannual reporting period from July 1 through December 31.

(4) Each subsequent compliance report must be postmarked or delivered no later than July 31 or January 31, whichever date is the first date following the end of the semiannual reporting period.

(5) For each affected source that is subject to permitting regulations pursuant to 40 CFR part 70 or 40 CFR part 71, and if the permitting authority has established dates for submitting semiannual reports pursuant to 40 CFR 70.6(a)(3)(iii)(A) or 40 CFR 71.6(a)(3)(iii)(A), you may submit the first and subsequent compliance reports according to the dates the permitting authority has established instead of according to the dates in paragraphs (b)(1) through (4) of this section.

(c) The compliance report must contain the information required in paragraphs (c)(1) through (9) of this section.

(1) Company name and address.

(2) Statement by a responsible official with that official's name, title, and signature, certifying the truth, accuracy, and completeness of the content of the report.

(3) Date of report and beginning and ending dates of the reporting period.

(4) The total fuel use by each affected source subject to an emission limit, for each calendar month within the semiannual reporting period, including, but not limited to, a description of the fuel, whether the fuel has received a non-waste determination by EPA or your basis for concluding that the fuel is not a waste, and the total fuel usage amount with units of measure.

(5) A summary of the results of the annual performance tests and documentation of any operating limits that were reestablished during this test, if applicable. If you are conducting stack tests once every three years consistent with § 63.7515(b) or (c), the date of the last three stack tests, a comparison of the emission level you achieved in the last three stack tests to the 90 percent emission limit threshold required in § 63.7515(b) or (c), and a statement as to whether there have been any operational changes since the last stack test that could increase emissions.

(6) A signed statement indicating that you burned no new types of fuel. Or, if you did burn a new type of fuel, you must submit the calculation of chlorine input, using Equation 5 of § 63.7530, that demonstrates that your source is still within its maximum chlorine input level established during the previous performance testing (for sources that demonstrate compliance through performance testing) or you must submit the calculation of HCl emission rate using Equation 9 of § 63.7530 that demonstrates that your source is still meeting the emission limit for HCl emissions (for boilers or process heaters that demonstrate compliance through fuel analysis). If you burned a new type of fuel, you must submit the calculation of mercury input, using Equation 7 of § 63.7530, that demonstrates that your source is still within its maximum mercury input level established during the previous performance testing (for sources that demonstrate compliance through performance testing), or you must submit the calculation of mercury emission rate using Equation 11 of § 63.7530 that demonstrates that your source is still meeting the emission limit for mercury emissions (for boilers or process heaters that demonstrate compliance through fuel analysis).

(7) If you wish to burn a new type of fuel and you cannot demonstrate compliance with the maximum chlorine input operating limit using Equation 5 of § 63.7530 or the maximum mercury input operating limit using Equation 7 of § 63.7530, you must include in the compliance report a statement indicating the intent to conduct a new performance test within 60 days of starting to burn the new fuel.

(8) If there are no deviations from any emission limits or operating limits in this subpart that apply to you, a statement that there were no deviations from the emission limits or operating limits during the reporting period.

(9) If there were no deviations from the monitoring requirements including no periods during which the CMSs, including CEMS, COMS, and CPMS, were out of control as specified in § 63.8(c)(7), a statement that there were no deviations and no periods during which the CMS were out of control during the reporting period.

(d) For each deviation from an emission limit or operating limit in this subpart that occurs at an affected source where you are not using a CMS to comply with that emission limit or operating limit, the compliance report must additionally contain the information required in paragraphs (d)(1) through (4) of this section.

(1) The total operating time of each affected source during the reporting period.

(2) A description of the deviation and which emission limit or operating limit from which you deviated.

(3) Information on the number, duration, and cause of deviations (including unknown cause), as applicable, and the corrective action taken.

(4) A copy of the test report if the annual performance test showed a deviation from the emission limits.

(e) For each deviation from an emission limit, operating limit, and monitoring requirement in this subpart occurring at an affected source where you are using a CMS to comply with that emission limit or operating limit, you must include the information required in paragraphs (e) (1) through (12) of this section. This includes any deviations from your site-specific monitoring plan as required in § 63.7505(d).

(1) The date and time that each deviation started and stopped and description of the nature of the deviation (*i.e.,* what you deviated from).

(2) The date and time that each CMS was inoperative, except for zero (low-level) and high-level checks.

(3) The date, time, and duration that each CMS was out of control, including the information in § 63.8(c)(8).

(4) The date and time that each deviation started and stopped, and whether each deviation occurred during a period of startup, shutdown, or malfunction or during another period.

(5) A summary of the total duration of the deviation during the reporting period and the total duration as a percent of the total source operating time during that reporting period.

(6) An analysis of the total duration of the deviations during the reporting period into those that are due to startup, shutdown, control equipment problems, process problems, other known causes, and other unknown causes.

(7) A summary of the total duration of CMSs downtime during the reporting period and the total duration of CMS downtime as a percent of the total source operating time during that reporting period.

(8) An identification of each parameter that was monitored at the affected source for which there was a deviation.

(9) A brief description of the source for which there was a deviation.

(10) A brief description of each CMS for which there was a deviation.

(11) The date of the latest CMS certification or audit for the system for which there was a deviation.

(12) A description of any changes in CMSs, processes, or controls since the last reporting period for the source for which there was a deviation.

(f) Each affected source that has obtained a title V operating permit pursuant to 40 CFR part 70 or 40 CFR part 71 must report all deviations as defined in this subpart in the semiannual monitoring report required by 40 CFR 70.6(a)(3)(iii)(A) or 40 CFR 71.6(a)(3)(iii)(A). If an affected source submits a compliance report pursuant to Table 9 to this subpart along with, or as part of, the semiannual monitoring report required by 40 CFR 70.6(a)(3)(iii)(A) or 40 CFR 71.6(a)(3)(iii)(A), and the compliance report includes all required information concerning deviations from any

emission limit, operating limit, or work practice requirement in this subpart, submission of the compliance report satisfies any obligation to report the same deviations in the semiannual monitoring report. However, submission of a compliance report does not otherwise affect any obligation the affected source may have to report deviations from permit requirements to the permit authority.

(g) In addition to the information required in § 63.9(h)(2), your notification must include the following certification(s) of compliance, as applicable, and signed by a responsible official:

(1) "This facility complies with the requirements in § 63.7540(a)(10) to conduct an annual tune-up of the unit".

(2) "This facility has had an energy assessment performed according to § 63.7530(e)."

(3) "No secondary materials that are solid waste were combusted in any affected unit."

(h) After December 31, 2011, within 60 days after the date of completing each performance evaluation conducted to demonstrate compliance with this subpart, the owner or operator of the affected facility must submit the test data to EPA by entering the data electronically into EPA's WebFIRE data base through EPA's Central Data Exchange. The owner or operator of an affected facility shall enter the test data into EPA's data base using the Electronic Reporting Tool or other compatible electronic spreadsheet. Only performance evaluation data collected using methods compatible with ERT are subject to this requirement to be submitted electronically into EPA's WebFIRE database.

§ 63.7555 What records must I keep?

(a) You must keep records according to paragraphs (a)(1) and (2) of this section.

(1) A copy of each notification and report that you submitted to comply with this subpart, including all documentation supporting any Initial Notification or Notification of Compliance Status or semiannual compliance report that you submitted, according to the requirements in § 63.10(b)(2)(xiv).

(2) Records of performance stack tests, fuel analyses, or other compliance demonstrations, performance evaluations, and opacity observations as required in § 63.10(b)(2)(viii).

(b) For each CEMS, CPMS, and COMS, you must keep records according to paragraphs (b)(1) through (5) of this section.

(1) Records described in § 63.10(b)(2)(vi) through (xi).

(2) Monitoring data for continuous opacity monitoring system during a performance evaluation as required in § 63.6(h)(7)(i) and (ii).

(3) Previous (*i.e.,* superseded) versions of the performance evaluation plan as required in § 63.8(d)(3).

(4) Request for alternatives to relative accuracy test for CEMS as required in § 63.8(f)(6)(i).

(5) Records of the date and time that each deviation started and stopped, and whether the deviation occurred during a period of startup, shutdown, or malfunction or during another period.

(c) You must keep the records required in Table 8 to this subpart including records of all monitoring data and calculated averages for applicable operating limits such as opacity, pressure drop, and pH to show continuous compliance with each emission limit and operating limit that applies to you.

(d) For each boiler or process heater subject to an emission limit, you must also keep the records in paragraphs (d)(1) through (5) of this section.

(1) You must keep records of monthly fuel use by each boiler or process heater, including the type(s) of fuel and amount(s) used.

(2) If you combust non-hazardous secondary materials that have been determined not to be solid waste pursuant to 40 CFR 41.3(b)(1), you must keep a record which documents how the secondary material meets each of the legitimacy criteria. If you combust a fuel that has been processed from a discarded non-hazardous secondary material pursuant to 40 CFR 241.3(b)(2), you must keep records as to how the operations that produced the fuel satisfies the definition of processing in 40 CFR 241.2. If the fuel received a non-waste determination pursuant to the petition process submitted under 40 CFR 241.3(c), you must keep a record which documents how the fuel satisfies the requirements of the petition process.

(3) You must keep records of monthly hours of operation by each boiler or process heater. This requirement applies only to limited-use boilers and process heaters.

(4) A copy of all calculations and supporting documentation of maximum chlorine fuel input, using Equation 5 of § 63.7530, that were done to demonstrate continuous compliance with the HCl emission limit, for sources that demonstrate compliance through performance testing. For sources that demonstrate compliance through fuel analysis, a copy of all calculations and supporting documentation of HCl emission rates, using Equation 9 of § 63.7530, that were done to demonstrate compliance with the HCl emission limit. Supporting documentation should include results of any fuel analyses and basis for the estimates of maximum chlorine fuel input or HCl emission rates. You can use the results from one fuel analysis for multiple boilers and process heaters provided they are all burning the same fuel type. However, you must calculate chlorine fuel input, or HCl emission rate, for each boiler and process heater.

(5) A copy of all calculations and supporting documentation of maximum mercury fuel input, using Equation 7 of § 63.7530, that were done to demonstrate continuous compliance with the mercury emission limit for sources that demonstrate compliance through performance testing. For sources that demonstrate compliance through fuel analysis, a copy of all calculations and supporting documentation of mercury emission rates, using Equation 11 of § 63.7530, that were done to demonstrate compliance with the mercury emission limit. Supporting documentation should include results of any fuel analyses and basis for the estimates of maximum mercury fuel input or mercury emission rates. You can use the results from one fuel analysis for multiple boilers and process heaters provided they are all burning the same fuel type. However, you must calculate mercury fuel input, or mercury emission rates, for each boiler and process heater.

(6) If consistent with § 63.7555(b) and (c), you choose to stack test less frequently than annually, you must keep annual records that document that your emissions in the previous stack test(s) were less than 90 percent of the applicable emission limit, and document that there was no change in source operations including fuel composition and operation of air pollution control equipment that would cause emissions of the relevant pollutant to increase within the past year.

(7) If you operate a gaseous fuel unit that is subject to the emission limits specified in Table 1 or 2 to this subpart, and you intend to use a fuel other than natural gas or equivalent to fire the affected unit, you must keep records of the information required by the notification under § 63.7550, and records of the total hours per calendar year that liquid fuel is burned.

(e) If you elect to average emissions consistent with § 63.7522, you must additionally keep a copy of the emission averaging implementation plan required in § 63.7522(g), all calculations required

under § 63.7522, including daily records of heat input or steam generation, as applicable, and monitoring records consistent with § 63.7541.

§ 63.7560 In what form and how long must I keep my records?

(a) Your records must be in a form suitable and readily available for expeditious review, according to § 63.10(b)(1).

(b) As specified in § 63.10(b)(1), you must keep each record for 5 years following the date of each occurrence, measurement, maintenance, corrective action, report, or record.

(c) You must keep each record on site for at least 2 years after the date of each occurrence, measurement, maintenance, corrective action, report, or record, according to § 63.10(b)(1). You can keep the records off site for the remaining 3 years.

Other Requirements and Information

§ 63.7565 What parts of the General Provisions apply to me?

Table 10 to this subpart shows which parts of the General Provisions in §§ 63.1 through 63.15 apply to you.

§ 63.7570 Who implements and enforces this subpart?

(a) This subpart can be implemented and enforced by U.S. EPA, or a delegated authority such as your State, local, or tribal agency. If the EPA Administrator has delegated authority to your State, local, or tribal agency, then that agency (as well as the U.S. EPA) has the authority to implement and enforce this subpart. You should contact your EPA Regional Office to find out if this subpart is delegated to your State, local, or tribal agency.

(b) In delegating implementation and enforcement authority of this subpart to a State, local, or tribal agency under 40 CFR part 63, subpart E, the authorities listed in paragraphs (b)(1) through (5) of this section are retained by the EPA Administrator and are not transferred to the State, local, or tribal agency, however, the U.S. EPA retains oversight of this subpart and can take enforcement actions, as appropriate.

(1) Approval of alternatives to the non-opacity emission limits and work practice standards in § 63.7500(a) and (b) under § 63.6(g).

(2) Approval of alternative opacity emission limits in § 63.7500(a) under § 63.6(h)(9).

(3) Approval of major change to test methods in Table 5 to this subpart under § 63.7(e)(2)(ii) and (f) and as defined in § 63.90, and alternative analytical methods requested under 63.7521(b)(2).

(4) Approval of major change to monitoring under § 63.8(f) and as defined in § 63.90, and approval of alternative operating parameters under 63.7500(a)(2) and 63.7522(g)(2).

(5) Approval of major change to recordkeeping and reporting under § 63.10(e) and as defined in § 63.90.

§ 63.7575 What definitions apply to this subpart?

Terms used in this subpart are defined in the Clean Air Act (CAA), in § 63.2 (the General Provisions), and in this section as follows:

Bag leak detection system means a group of instruments that are capable of monitoring particulate matter loadings in the exhaust of a fabric filter (*i.e.,* baghouse) in order to detect bag failures. A bag leak detection system includes, but is not limited to, an instrument that operates on electrodynamic, triboelectric, light scattering, light transmittance, or other principle to monitor relative particulate matter loadings.

Biomass fuel means but is not limited to, wood residue, and wood products (*e.g.,* trees, tree stumps, tree limbs, bark, lumber, sawdust, sanderdust, chips, scraps, slabs, millings, and shavings); animal manure, including litter and other bedding materials; vegetative agricultural and silvicultural materials, such as logging residues (slash), nut and grain hulls and chaff (*e.g.,* almond, walnut, peanut, rice, and wheat), bagasse, orchard prunings, corn stalks, coffee bean hulls and grounds. This definition of biomass fuel is not intended to suggest that these materials are or are not solid waste.

Blast furnace gas fuel-fired boiler or process heater means an industrial/commercial/institutional boiler or process heater that receives 90 percent or more of its total heat input (based on an annual average) from blast furnace gas.

Boiler means an enclosed device using controlled flame combustion and having the primary purpose of recovering thermal energy in the form of steam or hot water. A device combusting solid waste, as defined in 40 CFR 241.3, is not a boiler. Waste heat boilers are excluded from this definition.

Boiler system means the boiler and associated components, such as, the feedwater system, the combustion air system, the fuel system (including burners), blowdown system, combustion control system, and energy consuming systems.

Coal means all solid fuels classifiable as anthracite, bituminous, sub-bituminous, or lignite by the American Society for Testing and Materials in ASTM D388–991.[1], "Standard Specification for Classification of Coals by Rank"[1] (incorporated by reference, *see* § 63.14(b)), coal refuse, and petroleum coke. Synthetic fuels derived from coal for the purpose of creating useful heat including, but not limited to, solvent-refined coal, coal-oil mixtures, and coal-water mixtures, for the purposes of this subpart. Coal derived gases are excluded from this definition.

Coal refuse means any by-product of coal mining or coal cleaning operations with an ash content greater than 50 percent (by weight) and a heating value less than 13,900 kilojoules per kilogram (6,000 Btu per pound) on a dry basis.

Commercial/institutional boiler means a boiler used in commercial establishments or institutional establishments such as medical centers, research centers, institutions of higher education, hotels, and laundries to provide electricity, steam, and/or hot water.

Common stack means the exhaust of emissions from two or more affected units through a single flue.

Cost-effective energy conservation measure means a measure that is implemented to improve the energy efficiency of the boiler or facility that has a payback (return of investment) period of two years or less.

Deviation. (1) Deviation means any instance in which an affected source subject to this subpart, or an owner or operator of such a source:

(i) Fails to meet any requirement or obligation established by this subpart including, but not limited to, any emission limit, operating limit, or work practice standard; or

(ii) Fails to meet any term or condition that is adopted to implement an applicable requirement in this subpart and that is included in the operating permit for any affected source required to obtain such a permit.

(2) A deviation is not always a violation. The determination of whether a deviation constitutes a violation of the standard is up to the discretion of the entity responsible for enforcement of the standards.

Distillate oil means fuel oils, including recycled oils, that comply with the specifications for fuel oil numbers 1 and 2, as defined by the American Society for Testing and Materials in ASTM D396–02a, "Standard Specifications for Fuel Oils"[1] (incorporated by reference, *see* § 63.14(b)).

Dry scrubber means an add-on air pollution control system that injects dry alkaline sorbent (dry injection) or sprays an alkaline sorbent (spray dryer) to react

with and neutralize acid gas in the exhaust stream forming a dry powder material. Sorbent injection systems in fluidized bed boilers and process heaters are included in this definition.

Dutch oven means a unit having a refractory-walled cell connected to a conventional boiler setting. Fuel materials are introduced through an opening in the roof of the Dutch oven and burn in a pile on its floor.

Electric utility steam generating unit means a fossil fuel-fired combustion unit of more than 25 megawatts that serves a generator that produces electricity for sale. A fossil fuel-fired unit that cogenerates steam and electricity and supplies more than one-third of its potential electric output capacity and more than 25 megawatts electrical output to any utility power distribution system for sale is considered an electric utility steam generating unit.

Electrostatic precipitator means an add-on air pollution control device used to capture particulate matter by charging the particles using an electrostatic field, collecting the particles using a grounded collecting surface, and transporting the particles into a hopper.

Energy assessment means an in-depth assessment of a facility to identify immediate and long-term opportunities to save energy, focusing on the steam and process heating systems which involves a thorough examination of potential savings from energy efficiency improvements, waste minimization and pollution prevention, and productivity improvement.

Equivalent means the following only as this term is used in Table 6 to subpart DDDDD:

(1) An equivalent sample collection procedure means a published voluntary consensus standard or practice (VCS) or EPA method that includes collection of a minimum of three composite fuel samples, with each composite consisting of a minimum of three increments collected at approximately equal intervals over the test period.

(2) An equivalent sample compositing procedure means a published VCS or EPA method to systematically mix and obtain a representative subsample (part) of the composite sample.

(3) An equivalent sample preparation procedure means a published VCS or EPA method that: Clearly states that the standard, practice or method is appropriate for the pollutant and the fuel matrix; or is cited as an appropriate sample preparation standard, practice or method for the pollutant in the chosen VCS or EPA determinative or analytical method.

(4) An equivalent procedure for determining heat content means a published VCS or EPA method to obtain gross calorific (or higher heating) value.

(5) An equivalent procedure for determining fuel moisture content means a published VCS or EPA method to obtain moisture content. If the sample analysis plan calls for determining metals (especially the mercury, selenium, or arsenic) using an aliquot of the dried sample, then the drying temperature must be modified to prevent vaporizing these metals. On the other hand, if metals analysis is done on an "as received" basis, a separate aliquot can be dried to determine moisture content and the metals concentration mathematically adjusted to a dry basis.

(6) An equivalent pollutant (mercury) determinative or analytical procedure means a published VCS or EPA method that clearly states that the standard, practice, or method is appropriate for the pollutant and the fuel matrix and has a published detection limit equal to or lower than the methods listed in Table 6 to subpart DDDDD for the same purpose.

Fabric filter means an add-on air pollution control device used to capture particulate matter by filtering gas streams through filter media, also known as a baghouse.

Federally enforceable means all limitations and conditions that are enforceable by the EPA Administrator, including the requirements of 40 CFR parts 60 and 61, requirements within any applicable State implementation plan, and any permit requirements established under 40 CFR 52.21 or under 40 CFR 51.18 and 40 CFR 51.24.

Fuel type means each category of fuels that share a common name or classification. Examples include, but are not limited to, bituminous coal, subbituminous coal, lignite, anthracite, biomass, residual oil. Individual fuel types received from different suppliers are not considered new fuel types.

Fluidized bed boiler means a boiler utilizing a fluidized bed combustion process.

Fluidized bed combustion means a process where a fuel is burned in a bed of granulated particles which are maintained in a mobile suspension by the forward flow of air and combustion products.

Fuel cell means a boiler type in which the fuel is dropped onto suspended fixed grates and is fired in a pile. The refractory-lined fuel cell uses combustion air preheating and positioning of secondary and tertiary air injection ports to improve boiler efficiency.

Gaseous fuel includes, but is not limited to, natural gas, process gas, landfill gas, coal derived gas, refinery gas, and biogas. Blast furnace gas is exempted from this definition.

Heat input means heat derived from combustion of fuel in a boiler or process heater and does not include the heat input from preheated combustion air, recirculated flue gases, or exhaust gases from other sources such as gas turbines, internal combustion engines, kilns, etc.

Hot water heater means a closed vessel with a capacity of no more than 120 U.S. gallons in which water is heated by combustion of gaseous or liquid fuel and is withdrawn for use external to the vessel at pressures not exceeding 160 psig, including the apparatus by which the heat is generated and all controls and devices necessary to prevent water temperatures from exceeding 210 °F (99 °C).

Industrial boiler means a boiler used in manufacturing, processing, mining, and refining or any other industry to provide steam, hot water, and/or electricity.

Liquid fuel includes, but is not limited to, distillate oil, residual oil, on-spec used oil, and biodiesel.

Liquid fuel subcategory includes any boiler or process heater of any design that burns more than 10 percent liquid fuel and less than 10 percent solid fuel, on an annual heat input basis.

Metal process furnaces include natural gas-fired annealing furnaces, preheat furnaces, reheat furnaces, aging furnaces, and heat treat furnaces.

Minimum pressure drop means 90 percent of the test average pressure drop measured according to Table 7 to this subpart during the most recent performance test demonstrating compliance with the applicable emission limit.

Minimum scrubber effluent pH means 90 percent of the test average effluent pH measured at the outlet of the wet scrubber according to Table 7 to this subpart during the most recent performance test demonstrating compliance with the applicable hydrogen chloride emission limit.

Minimum scrubber flow rate means 90 percent of the test average flow rate measured according to Table 7 to this subpart during the most recent performance test demonstrating compliance with the applicable emission limit.

Minimum sorbent injection rate means 90 percent of the test average sorbent (or activated carbon) injection rate for each sorbent measured according to Table 7 to this subpart during the most recent performance test

demonstrating compliance with the applicable emission limits.

Minimum voltage or amperage means 90 percent of the test average voltage or amperage to the electrostatic precipitator measured according to Table 7 to this subpart during the most recent performance test demonstrating compliance with the applicable emission limits.

Natural gas means:

(1) A naturally occurring mixture of hydrocarbon and nonhydrocarbon gases found in geologic formations beneath the earth's surface, of which the principal constituent is methane; or

(2) Liquid petroleum gas, as defined by the American Society for Testing and Materials in ASTM D1835–03a, "Standard Specification for Liquid Petroleum Gases" (incorporated by reference, *see* § 63.14(b)).

Opacity means the degree to which emissions reduce the transmission of light and obscure the view of an object in the background.

Particulate matter means any finely divided solid or liquid material, other than uncombined water, as measured by the test methods specified under this subpart, or an alternative method.

Period of natural gas curtailment or supply interruption means a period of time during which the supply of natural gas to an affected facility is halted for reasons beyond the control of the facility. An increase in the cost or unit price of natural gas does not constitute a period of natural gas curtailment or supply interruption.

Process heater means an enclosed device using controlled flame, that is not a boiler, and the unit's primary purpose is to transfer heat indirectly to a process material (liquid, gas, or solid) or to a heat transfer material for use in a process unit, instead of generating steam. Process heaters are devices in which the combustion gases do not directly come into contact with process materials. A device combusting solid waste, as defined in 40 CFR 241.3, is not a process heater. Process heaters do not include units used for comfort heat or space heat, food preparation for on-site consumption, or autoclaves.

Pulverized coal boiler means a boiler in which pulverized coal is introduced into an air stream that carries the coal to the combustion chamber of the boiler where it is fired in suspension.

Qualified personnel means specialists in evaluating energy systems, such as those who have successfully completed the DOE Qualified Specialist program for all systems, Certified Energy Manager certified by the Association of Energy Engineers, or the equivalent.

Residual oil means crude oil, and all fuel oil numbers 4, 5 and 6, as defined by the American Society for Testing and Materials in ASTM D396–02a, "Standard Specifications for Fuel Oils [1]" (incorporated by reference, *see* § 63.14(b)).

Responsible official means responsible official as defined in 40 CFR 70.2.

Stoker means a unit consisting of a mechanically operated fuel feeding mechanism, a stationary or moving grate to support the burning of fuel and admit undergrate air to the fuel, an overfire air system to complete combustion, and an ash discharge system. There are two general types of stokers: Underfeed and overfeed. Overfeed stokers include mass feed and spreader stokers.

Suspension boiler means a unit designed to feed the fuel by means of fuel distributors. The distributors inject air at the point where the fuel is introduced into the boiler in order to spread the fuel material over the boiler width. The drying (and much of the combustion) occurs while the material is suspended in air. The combustion of the fuel material is completed on a grate or floor below. Suspension boilers almost universally are designed to have high heat release rates to quickly dry the wet fuel as it is blown into the boilers.

Temporary boiler means any gaseous or liquid fuel boiler that is designed to, and is capable of, being carried or moved from one location to another. A temporary boiler that remains at a location for more than 180 consecutive days is no longer considered to be a temporary boiler. Any temporary boiler that replaces a temporary boiler at a location and is intended to perform the same or similar function will be included in calculating the consecutive time period.

Tune-up means adjustments made to a boiler in accordance with procedures supplied by the manufacturer (or an approved specialist) to optimize the combustion efficiency.

Unit designed to burn biomass subcategory includes any boiler or process heater that burns at least 10 percent biomass, but less than 10 percent coal, on a heat input basis on an annual average, either alone or in combination with liquid fuels or gaseous fuels.

Unit designed to burn coal subcategory includes any boiler or process heater that burns any coal alone or at least 10 percent coal on a heat input basis on an annual average in combination with biomass, liquid fuels, or gaseous fuels.

Unit designed to burn gas 1 (NG/RG) subcategory includes any boiler or process heater that burns at least 90 percent natural gas and/or refinery gas on a heat input basis on an annual average.

Unit designed to burn gas 2 (other) subcategory includes any boiler or process heater that burns gaseous fuels other than natural gas and/or refinery gas not combined with any solid or liquid fuels.

Unit designed to burn oil subcategory includes any boiler or process heater that burns any liquid fuel, but less than 10 percent solid fuel on a heat input basis on an annual average, either alone or in combination with gaseous fuels. Gaseous fuel boilers and process heaters that burn liquid fuel during periods of gas curtailment, gas supply emergencies or for periodic testing of liquid fuel not to exceed a combined total of 48 hours during any calendar year are not included in this definition.

Voluntary Consensus Standards or VCS mean technical standards (*e.g.,* materials specifications, test methods, sampling procedures, business practices) developed or adopted by one or more voluntary consensus bodies. EPA/OAQPS has by precedent only used VCS that are written in English. Examples of VCS bodies are: American Society of Testing and Materials (ASTM), American Society of Mechanical Engineers (ASME), International Standards Organization (ISO), Standards Australia (AS), British Standards (BS), Canadian Standards (CSA), European Standard (EN or CEN) and German Engineering Standards (VDI). The types of standards that are not considered VCS are standards developed by: The U.S. states, *e.g.,* California (CARB) and Texas (TCEQ); industry groups, such as American Petroleum Institute (API), Gas Processors Association (GPA), and Gas Research Institute (GRI); and other branches of the U.S. government, *e.g.,* Department of Defense (DOD) and Department of Transportation (DOT). This does not preclude EPA from using standards developed by groups that are not VCS bodies within their rule. When this occurs, EPA has done searches and reviews for VCS equivalent to these non-EPA methods.

Waste heat boiler means a device that recovers normally unused energy and converts it to usable heat. Waste heat recovery boilers incorporating duct or supplemental burners that are designed to supply 50 percent or more of the total rated heat input capacity of the waste heat boiler are not considered waste heat boilers, but are considered boilers. Waste heat boilers are also referred to as heat recovery steam generators.

Waste heat process heater means an enclosed device that recovers normally unused energy and converts it to usable heat. Waste heat process heaters incorporating duct or supplemental burners that are designed to supply 50 percent or more of the total rated heat input capacity of the waste heat process heater are not considered waste heat process heaters, but are considered process heaters. Waste heat process heaters are also referred to as recuperative process heaters.

Wet scrubber means any add-on air pollution control device that mixes an aqueous stream or slurry with the exhaust gases from a boiler or process heater to control emissions of particulate matter and/or to absorb and neutralize acid gases, such as hydrogen chloride.

Work practice standard means any design, equipment, work practice, or operational standard, or combination thereof, that is promulgated pursuant to section 112(h) of the CAA.

Tables to Subpart DDDDD of Part 63

As stated in § 63.7500, you must comply with the following applicable emission limits:

TABLE 1 TO SUBPART DDDDD OF PART 63—EMISSION LIMITS FOR NEW OR RECONSTRUCTED BOILERS AND PROCESS HEATERS

If your boiler or process heater is in this subcategory . . .	For the following pollutants . . .	You must meet the following emission limits and work practice standards . . .
1. Pulverized coal	a. Particulate Matter	0.001 lb per MMBtu of heat input.
	b. Hydrogen Chloride	0.00006 lb per MMBtu of heat input.
	c. Mercury	2.0E–06 lb per MMBtu of heat input.
	d. CO	90 ppm by volume on a dry basis corrected to 3 percent oxygen (30-day rolling average for units 100 MMBtu/hr or greater, 3-run average for units less than 100 MMBtu/hr).
	e. Dioxin/Furan	0.002 ng/dscm (TEQ) corrected to 7 percent oxygen.
2. Stokers designed to burn coal	a. Particulate Matter	0.001 lb per MMBtu of heat input.
	b. Hydrogen Chloride	0.00006 lb per MMBtu of heat input.
	c. Mercury	2.0E–06 lb per MMBtu of heat input.
	d. CO	7 ppm by volume on a dry basis corrected to 3 percent oxygen (30-day rolling average for units 100 MMBtu/hr or greater, 3-run average for units less than 100 MMBtu/hr).
	e. Dioxin/Furan	0.003 ng/dscm (TEQ) corrected to 7 percent oxygen.
3. Fluidized bed units designed to burn coal.	a. Particulate Matter	0.001 lb per MMBtu of heat input.
	b. Hydrogen Chloride	0.00006 lb per MMBtu of heat input.
	c. Mercury	2.0E–06 lb per MMBtu of heat input.
	d. CO	30 ppm by volume on a dry basis corrected to 3 percent oxygen (30-day rolling average for units 100 MMBtu/hr or greater, 3-run average for units less than 100 MMBtu/hr).
	e. Dioxin/Furan	0.00003 ng/dscm (TEQ) corrected to 7 percent oxygen.
4. Stokers designed to burn biomass.	a. Particulate Matter	0.008 lb per MMBtu of heat input.
	b. Hydrogen Chloride	0.004 lb per MMBtu of heat input.
	c. Mercury	2.0E–07 lb per MMBtu of heat input.
	d. CO	560 ppm by volume on a dry basis corrected to 3 percent oxygen (30-day rolling average for units 100 MMBtu/hr or greater, 3-run average for units less than 100 MMBtu/hr).
	e. Dioxin/Furan	0.00005 ng/dscm (TEQ) corrected to 7 percent oxygen.
5. Fluidized bed units designed to burn biomass.	a. Particulate Matter	0.008 lb per MMBtu of heat input.
	b. Hydrogen Chloride	0.004 lb per MMBtu of heat input.
	c. Mercury	2.0E–07 lb per MMBtu of heat input.
	d. CO	40 ppm by volume on a dry basis corrected to 3 percent oxygen (30-day rolling average for units 100 MMBtu/hr or greater, 3-run average for units less than 100 MMBtu/hr).
	e. Dioxin/Furan	0.007 ng/dscm (TEQ) corrected to 7 percent oxygen.
6. Suspension burners/Dutch Ovens designed to burn biomass.	a. Particulate Matter	0.008 lb per MMBtu of heat input.
	b. Hydrogen Chloride	0.004 lb per MMBtu of heat input.
	c. Mercury	2.0E–07 lb per MMBtu of heat input.
	d. CO	1,010 ppm by volume on a dry basis corrected to 3 percent oxygen (30-day rolling average for units 100 MMBtu/hr or greater, 3-run average for units less than 100 MMBtu/hr).
	e. Dioxin/Furan	0.03 ng/dscm (TEQ) corrected to 7 percent oxygen.
7. Fuel cells designed to burn biomass.	a. Particulate Matter	0.008 lb per MMBtu of heat input.
	b. Hydrogen Chloride	0.004 lb per MMBtu of heat input.
	c. Mercury	2.0E–07 lb per MMBtu of heat input.
	d. CO	270 ppm by volume on a dry basis corrected to 3 percent oxygen (30-day rolling average for units 100 MMBtu/hr or greater, 3-run average for units less than 100 MMBtu/hr).
	e. Dioxin/Furan	0.0005 ng/dscm (TEQ) corrected to 7 percent oxygen.
8. Units designed to burn liquid fuel	a. Particulate Matter	0.002 lb per MMBtu of heat input.
	b. Hydrogen Chloride	0.0004 lb per MMBtu of heat input.
	c. Mercury	3.0E–07 lb per MMBtu of heat input.
	d. CO	1 ppm by volume on a dry basis corrected to 3 percent oxygen (30-day rolling average for units 100 MMBtu/hr or greater, 3-run average for units less than 100 MMBtu/hr).
	e. Dioxin/Furan	0.002 ng/dscm (TEQ) corrected to 7 percent oxygen.

TABLE 1 TO SUBPART DDDDD OF PART 63—EMISSION LIMITS FOR NEW OR RECONSTRUCTED BOILERS AND PROCESS HEATERS—Continued

If your boiler or process heater is in this subcategory . . .	For the following pollutants . . .	You must meet the following emission limits and work practice standards . . .
9. Units designed to burn other gases.	a. Particulate Matter	0.003 lb per MMBtu of heat input.
	b. Hydrogen Chloride	3.0E–06 lb per MMBtu of heat input.
	c. Mercury	2.0E–07 lb per MMBtu of heat input.
	d. CO	1 ppm by volume on a dry basis corrected to 3 percent oxygen (30-day rolling average for units 100 MMBtu/hr or greater, 3-run average for units less than 100 MMBtu/hr).
	e. Dioxin/Furan	0.009 ng/dscm (TEQ) corrected to 7 percent oxygen.

As stated in § 63.7500, you must comply with the following applicable emission limits:

TABLE 2 TO SUBPART DDDDD OF PART 63—EMISSION LIMITS FOR EXISTING BOILERS AND PROCESS HEATERS

[Units with heat input capacity of 10 million Btu per hour or greater]

If your boiler or process heater is in this subcategory . . .	For the following pollutants . . .	You must meet the following emission limits and work practice standards . . .
1. Pulverized coal	a. Particulate Matter	0.02 lb per MMBtu of heat input.
	b. Hydrogen Chloride	0.02 lb per MMBtu of heat input.
	c. Mercury	3.0E–06 lb per MMBtu of heat input.
	d. CO	90 ppm by volume on a dry basis corrected to 3 percent oxygen (30-day rolling average for units 100 MMBtu/hr or greater, 3-run average for units less than 100 MMBtu/hr).
	e. Dioxin/Furan	0.004 ng/dscm (TEQ) corrected to 7 percent oxygen.
2. Stokers designed to burn coal	a. Particulate Matter	0.02 lb per MMBtu of heat input.
	b. Hydrogen Chloride	0.02 lb per MMBtu of heat input.
	c. Mercury	3.0E–06 lb per MMBtu of heat input.
	d. CO	50 ppm by volume on a dry basis corrected to 3 percent oxygen (30-day rolling average for units 100 MMBtu/hr or greater, 3-run average for units less than 100 MMBtu/hr).
	e. Dioxin/Furan	0.003 ng/dscm (TEQ) corrected to 7 percent oxygen.
3. Fluidized bed units designed to burn coal.	a. Particulate Matter	0.02 lb per MMBtu of heat input.
	b. Hydrogen Chloride	0.02 lb per MMBtu of heat input.
	c. Mercury	3.0E–06 lb per MMBtu of heat input.
	d. CO	30 ppm by volume on a dry basis corrected to 3 percent oxygen (30-day rolling average for units 100 MMBtu/hr or greater, 3-run average for units less than 100 MMBtu/hr).
	e. Dioxin/Furan	0.002 ng/dscm (TEQ) corrected to 7 percent oxygen.
4. Stokers designed to burn biomass.	a. Particulate Matter	0.02 lb per MMBtu of heat input.
	b. Hydrogen Chloride	0.006 lb per MMBtu of heat input.
	c. Mercury	9.0E–07 lb per MMBtu of heat input.
	d. CO	560 ppm by volume on a dry basis corrected to 3 percent oxygen (30-day rolling average for units 100 MMBtu/hr or greater, 3-run average for units less than 100 MMBtu/hr).
	e. Dioxin/Furan	0.004 ng/dscm (TEQ) corrected to 7 percent oxygen.
5. Fluidized bed units designed to burn biomass.	a. Particulate Matter	0.02 lb per MMBtu of heat input.
	b. Hydrogen Chloride	0.006 lb per MMBtu of heat input.
	c. Mercury	9.0E–07 lb per MMBtu of heat input.
	d. CO	250 ppm by volume on a dry basis corrected to 3 percent oxygen (30-day rolling average for units 100 MMBtu/hr or greater, 3-run average for units less than 100 MMBtu/hr).
	e. Dioxin/Furan	0.02 ng/dscm (TEQ) corrected to 7 percent oxygen.
6. Suspension burners/Dutch Ovens designed to burn biomass.	a. Particulate Matter	0.02 lb per MMBtu of heat input.
	b. Hydrogen Chloride	0.006 lb per MMBtu of heat input.
	c. Mercury	9.0E–07 lb per MMBtu of heat input.
	d. CO	1,010 ppm by volume on a dry basis corrected to 3 percent oxygen (30-day rolling average for units 100 MMBtu/hr or greater, 3-run average for units less than 100 MMBtu/hr).
	e. Dioxin/Furan	0.03 ng/dscm (TEQ) corrected to 7 percent oxygen.
7. Fuel cells designed to burn biomass.	a. Particulate Matter	0.02 lb per MMBtu of heat input.
	b. Hydrogen Chloride	0.006 lb per MMBtu of heat input.
	c. Mercury	9.0E–07 lb per MMBtu of heat input.
	d. CO	270 ppm by volume on a dry basis corrected to 3 percent oxygen (30-day rolling average for units 100 MMBtu/hr or greater, 3-run average for units less than 100 MMBtu/hr).
	e. Dioxin/Furan	0.02 ng/dscm (TEQ) corrected to 7 percent oxygen.

TABLE 2 TO SUBPART DDDDD OF PART 63—EMISSION LIMITS FOR EXISTING BOILERS AND PROCESS HEATERS—Continued

[Units with heat input capacity of 10 million Btu per hour or greater]

If your boiler or process heater is in this subcategory . . .	For the following pollutants . . .	You must meet the following emission limits and work practice standards . . .
8. Units designed to burn liquid fuel	a. Particulate Matter	0.004 lb per MMBtu of heat input.
	b. Hydrogen Chloride	0.0009 lb per MMBtu of heat input.
	c. Mercury	4.0E–06 lb per MMBtu of heat input.
	d. CO	1 ppm by volume on a dry basis corrected to 3 percent oxygen (30-day rolling average for units 100 MMBtu/hr or greater, 3-run average for units less than 100 MMBtu/hr).
	e. Dioxin/Furan	0.002 ng/dscm (TEQ) corrected to 7 percent oxygen.
9. Units designed to burn other gases.	a. Particulate Matter	0.05 lb per MMBtu of heat input.
	b. Hydrogen Chloride	3.0E–06 lb per MMBtu of heat input.
	c. Mercury	2.0E–07 lb per MMBtu of heat input.
	d. CO	1 ppm by volume on a dry basis corrected to 3 percent oxygen (30-day rolling average for units 100 MMBtu/hr or greater, 3-run average for units less than 100 MMBtu/hr).
	e. Dioxin/Furan	0.009 ng/dscm (TEQ) corrected to 7 percent oxygen.

As stated in §§ 63.11202 and 63.11203, you must comply with the following applicable work practice standards:

TABLE 3 TO SUBPART DDDDD OF PART 63—WORK PRACTICE STANDARDS

If your boiler is . . .	You must meet the following . . .
1. An existing boiler or process heater with heat input capacity of less than 10 million Btu per hour.	Conduct a tune-up of the boiler biennially as specified in § 63.7540.
2. A new or existing boiler or process heater in either the Gas 1 or Metal Process Furnace subcategory with heat input capacity of 10 million Btu per hour or greater.	Conduct a tune-up of the boiler annually as specified in § 63.7540.
3. An existing boiler located at a major source facility.	Must have an energy assessment performed on the major source facility by qualified personnel which includes: (a) a visual inspection of the boiler system. (b) establish operating characteristics of the facility, energy system specifications, operating and maintenance procedures, and unusual operating constraints, (c) identify major energy consuming systems, (d) a review of available architectural and engineering plans, facility operation and maintenance procedures and logs, and fuel usage, (e) a list of major energy conservation measures, (f) the energy savings potential of the energy conservation measures identified, and (g) a comprehensive report detailing the ways to improve efficiency, the cost of specific improvements, benefits, and the time frame for recouping those investments, and (h) a facility energy management program developed according to the ENERGY STAR guideline for energy management.

As stated in § 63.7500, you must comply with the applicable operating limits:

TABLE 4 TO SUBPART DDDDD OF PART 63—OPERATING LIMITS FOR BOILERS AND PROCESS HEATERS

If you demonstrate compliance using . . .	You must meet these operating limits . . .
1. Wet scrubber control	a. Maintain the minimum pressure drop and liquid flow-rate at or above the operating levels established during the performance test according to § 63.7530(c) and Table 7 to this subpart.
2. Fabric filter control	a. Install and operate a bag leak detection system according to § 63.7525 and operate the fabric filter such that the bag leak detection system alarm does not sound more than 5 percent of the operating time during each 6-month period; or
	b. This option is for boilers and process heaters that operate dry control systems. Existing and new boilers and process heaters must maintain opacity to less than or equal to 10 percent (daily block average).
3. Electrostatic precipitator control	a. This option is for boilers and process heaters that operate dry control systems. Existing and new boilers and process heaters must maintain opacity to less than or equal to 10 percent opacity (daily block average); or

TABLE 4 TO SUBPART DDDDD OF PART 63—OPERATING LIMITS FOR BOILERS AND PROCESS HEATERS—Continued

If you demonstrate compliance using . . .	You must meet these operating limits . . .
	b. This option is only for boilers and process heaters that operate additional wet control systems. Maintain the minimum voltage and secondary current or total power input of the electrostatic precipitator at or above the operating limits established during the performance test according to § 63.7530(c) and Table 7 to this subpart.
4. Dry scrubber or carbon injection control	Maintain the minimum sorbent or carbon injection rate at or above the operating levels established during the performance test according to § 63.7530(c) and Table 7 to this subpart.
5. Any other control type	This option is for boilers and process heaters that operate dry control systems. Existing and new boilers and process heaters must maintain opacity to less than or equal to 10 percent opacity (daily block average).
6. Fuel analysis	Maintain the fuel type or fuel mixture such that the applicable emission rates calculated according to § 63.7530(d)(3), (4) and/or (5) is less than the applicable emission limits.

As stated in § 63.7520, you must comply with the following requirements for performance test for existing, new or reconstructed affected sources:

TABLE 5 TO SUBPART DDDDD OF PART 63—PERFORMANCE TESTING REQUIREMENTS

To conduct a performance test for the following pollutant . . .	You must . . .	Using . . .
1. Particulate Matter	a. Select sampling ports location and the number of traverse points.	Method 1 in appendix A to part 60 of this chapter.
	b. Determine velocity and volumetric flow-rate of the stack gas.	Method 2, 2F, or 2G in appendix A to part 60 of this chapter.
	c. Determine oxygen and carbon dioxide concentrations of the stack gas.	Method 3A or 3B in appendix A to part 60 of this chapter, or ASME PTC 19, Part 10 (1981) (IBR, see § 63.14(i)).
	d. Measure the moisture content of the stack gas.	Method 4 in appendix A to part 60 of this chapter.
	e. Measure the particulate matter emission concentration.	Method 5 or 17 (positive pressure fabric filters must use Method 5D) in appendix A to part 60 of this chapter.
	f. Convert emissions concentration to lb per MMBtu emission rates.	Method 19 F-factor methodology in appendix A to part 60 of this chapter.
2. Hydrogen chloride	a. Select sampling ports location and the number of traverse points.	Method 1 in appendix A to part 60 of this chapter.
	b. Determine velocity and volumetric flow-rate of the stack gas.	Method 2, 2F, or 2G in appendix A to part 60 of this chapter.
	c. Determine oxygen and carbon dioxide concentrations of the stack gas.	Method 3A or 3B in appendix A to part 60 of this chapter, or ASME PTC 19, Part 10 (1981) (IBR, see § 63.14(i)).
	d. Measure the moisture content of the stack gas.	Method 4 in appendix A to part 60 of this chapter.
	e. Measure the hydrogen chloride emission concentration.	Method 26 or 26A in appendix A to part 60 of this chapter.
	f. Convert emissions concentration to lb per MMBtu emission rates.	Method 19 F-factor methodology in appendix A to part 60 of this chapter.
3. Mercury	a. Select sampling ports location and the number of traverse points.	Method 1 in appendix A to part 60 of this chapter.
	b. Determine velocity and volumetric flow-rate of the stack gas.	Method 2, 2F, or 2G in appendix A to part 60 of this chapter.
	c. Determine oxygen and carbon dioxide concentrations of the stack gas.	Method 3A or 3B in appendix A to part 60 of this chapter, or ASME PTC 19, Part 10 (1981) (IBR, see § 62.14(i)).
	d. Measure the moisture content of the stack gas.	Method 4 in appendix A to part 60 of this chapter.
	e. Measure the mercury emission concentration.	Method 29 in appendix A to part 60 of this chapter or Method 101A in appendix B to part 61 of this chapter or ASTM Method D6784–02 (IBR, see § 63.14(b)).
	f. Convert emissions concentration to lb per MMBtu emission rates.	Method 19 F-factor methodology in appendix A to part 60 of this chapter.
4. CO	a. Select the sampling ports location and the number of traverse points.	Method 1 in appendix A to part 60 of this chapter.
	b. Determine oxygen and carbon dioxide concentrations of the stack gas.	Method 3A or 3B in appendix A to part 60 of this chapter, or ASTM D6522–00 (IBR, see § 63.14(b)), or ASME PTC 19, Part 10 (1981) (IBR, see § 63.14(i)).
	c. Measure the moisture content of the stack gas.	Method 4 in appendix A to part 60 of this chapter.
	d. Measure the CO emission concentration.	Method 10 in appendix A to part 60 of this chapter.
5. Dioxin/Furan	a. Select the sampling ports location and the number of traverse points.	Method 1 in appendix A to part 60 of this chapter.

TABLE 5 TO SUBPART DDDDD OF PART 63—PERFORMANCE TESTING REQUIREMENTS—Continued

To conduct a performance test for the following pollutant . . .	You must . . .	Using . . .
	b. Determine oxygen and carbon dioxide concentrations of the stack gas.	Method 3A or 3B in appendix A to part 60 of this chapter, or ASTM D6522–00 (IBR, see § 63.14(b)), or ASME PTC 19, Part 10 (1981) (IBR, see § 63.14(i)).
	c. Measure the moisture content of the stack gas.	Method 4 in appendix A to part 60 of this chapter.
	d. Measure the dioxin/furans emission concentration.	Method __ in appendix A to part 60 of this chapter.

As stated in § 63.7521, you must comply with the following requirements for fuel analysis testing for existing, new or reconstructed affected sources. However, equivalent methods may be used in lieu of the prescribed methods at the discretion of the source owner or operator:

TABLE 6 TO SUBPART DDDDD OF PART 63—FUEL ANALYSIS REQUIREMENTS

To conduct a fuel analysis for the following pollutant . . .	You must . . .	Using . . .
1. Mercury	a. Collect fuel samples	Procedure in § 63.7521(c) or ASTM D2234–D2234M–03 (for coal) (IBR, see § 63.14(b)) or ASTM D6323–98 (2003) (for biomass) (IBR, See § 63.14(b)) or equivalent.
	b. Composite fuel samples	Procedure in § 63.7521(d) or equivalent.
	c. Prepare composited fuel samples	SW–846–3050B (for solid samples) or SW–846–3020A (for liquid samples) or ASTM D2013–04 (for coal) (IBR, see § 63.14(b)) or ASTM D5198–92 (2003) (for biomass) (IBR, see § 63.14(b)) or equivalent.
	d. Determine heat content of the fuel type.	ASTM D5865–04 (for coal) (IBR, see § 63.24(b)) or ASTM E711–87 (for biomass) (IBR, see § 63.14(b)) or equivalent.
	e. Determine moisture content of the fuel type.	ASTM D3173–03 (IBR, see § 63.14(b)) or ASTM E871–82 (1998) (IBR, see § 63.14(b)) or equivalent.
	f. Measure mercury concentration in fuel sample.	ASTM D6722–01 (for coal) (IBR, see § 6314(b)) or SW–846–7471A (for solid samples) or SW–846–7470A (for liquid samples or equivalent.
	g. Convert concentration into units of pounds of pollutant per MMBtu of heat content.	
2. Hydrogen Chloride	a. Collect fuel samples	Procedure in § 63.7521(c) or ASTM D2234–D2234M–03 (for coal) (IBR, see § 63.14(b)) or ASTM D6323–98 (2003) (for biomass) (IBR, see § 63.14(b)) or equivalent.
	b. Composite fuel samples	Procedure in § 63.7521(d) or equivalent.
	c. Prepare composited fuel samples	SW–846–3050B (for solid samples) or SW–846–3020A (for liquid samples) or ASTM D2013–04 (for coal) (IBR, see § 63.14(b)) or ASTM D5198–92 (2003) (for biomass) (IBR, see § 63.14(b)) or equivalent.
	d. Determine heat content of the fuel type * * *.	ASTM D5865–04 (for coal) (IBR, see § 63.14(b)) or ASTM E711–87 (1996) (for biomass) (IBR, see § 63.14(b)) or equivalent.
	e. Determine moisture content of the fuel type.	ASTM D3173–03 (IBR, see § 63.14(b)) or ASTM E871–82 (1998) or equivalent.
	f. Measure chlorine concentration in fuel sample.	SW–846–9250 or ASTM D6721–01 (for coal) or ASTM E776–87 (1996) (for biomass) (IBR, see § 63.14(b)) or equivalent.
	g. Convert concentrations into units of pounds of pollutant per MMBtu of heat content.	

As stated in § 63.7520, you must comply with the following requirements for establishing operating limits:

TABLE 7 TO SUBPART DDDDD OF PART 63—ESTABLISHING OPERATING LIMITS

If you have an applicable emission limit for . . .	And your operating limits are based on . . .	You must . . .	Using . . .	According to the following requirements . . .
1. Particulate matter or mercury.	a. Wet scrubber operating parameters.	i. Establish a site-specific minimum pressure drop and minimum flow rate operating limit according to § 63.7530(c).	(1) Data from the pressure drop and liquid flow rate monitors and the particulate matter or mercury performance test.	(a) You must collect pressure drop and liquid flow-rate data every 15 minutes during the entire period of the performance tests; (b) Determine the average pressure drop and liquid flow-rate for each individual test run in the three-run performance test by computing the average of all the 15-minute readings taken during each test run.
	b. Electrostatic precipitator operating parameters (option only for units with additional wet scrubber control).	i. Establish a site-specific minimum voltage and secondary current or total power input according to § 63.7530(c).	(1) Data from the pressure drop and liquid flow rate monitors and the particulate matter or mercury performance test.	(a) You must collect voltage and secondary current or total power input data every 15 minutes during the entire period of the performance tests; (b) Determine the average voltage and secondary current or total power input for each individual test run in the three-run performance test by computing the average of all the 15-minute readings taken during each test run.
2. Hydrogen Chloride	a. Wet scrubber operating parameters.	i. Establish a site-specific minimum pressure drop and minimum flow rate operating limit according to § 63.7530(c).	(1) Data from the pH, pressure drop, and liquid flow-rate monitors and the hydrogen chloride performance test.	(a) You must collect pH, pressure drop, and liquid flow-rate data every 15 minutes during the entire period of the performance tests; (b) Determine the average pH, pressure drop, and liquid flow-rate for each individual test run in the three-run performance test by computing the average of all the 15-minute readings taken during each test run.
	b. Dry scrubber operating parameters.	i. Establish a site-specific minimum sorbent injection rate operating limit according to § 63.7530(c).	(1) Data from the sorbent injection rate monitors and hydrogen chloride performance test.	(a) You must collect sorbent injection rate data every 15 minutes during the entire period of the performance tests; (b) Determine the average sorbent injection rate for each individual test run in the three-run performance test by computing the average of all the 15-minute readings taken during each test run.

As stated in § 63.7540, you must show continuous compliance with the emission limitations for affected sources according to the following:

TABLE 8 TO SUBPART DDDDD OF PART 63—DEMONSTRATING CONTINUOUS COMPLIANCE

If you must meet the following operating limits or work practice standards . . .	You must demonstrate continuous compliance by . . .
1. Opacity	a. Collecting the opacity monitoring system data according to §§ 63.7525(b) and 63.7535; and b. Reducing the opacity monitoring data to 6-minute averages; and c. Maintaining opacity to less than or equal to 10 percent (daily block average).
2. Fabric Filter Bag Leak Detection Operation	Installing and operating a bag leak detection system according to § 63.7525 and operating the fabric filter such that the requirements in § 63.7540(a)(9) are met.
3. Wet Scrubber Pressure Drop and Liquid Flow-rate.	a. Collecting the pressure drop and liquid flow rate monitoring system data according to §§ 63.7525 and 63.7535; and b. Reducing the data to 12-hour block averages; and c. Maintaining the 12-hour average pressure drop and liquid flow-rate at or above the operating limits established during the performance test according to § 63.7530(c).
4. Wet Scrubber pH	a. Collecting the pH monitoring system data according to §§ 63.7525 and 63.7535; and b. Reducing the data to 12-hour block averages; and c. Maintaining the 12-hour average pH at or above the operating limit established during the performance test according to § 63.7530(c).
5. Dry Scrubber Sorbent or Carbon Injection Rate.	a. Collecting the sorbent or carbon injection rate monitoring system data for the dry scrubber according to §§ 63.7525 and 63.7535; and b. Reducing the data to 12-hour block averages; and c. Maintaining the 12-hour average sorbent or carbon injection rate at or above the operating limit established during the performance test according to §§ 63.7530(c).
6. Electrostatic Precipitator Secondary Current and Voltage or Total Power Input.	a. Collecting the secondary current and voltage or total power input monitoring system data for the electrostatic precipitator according to §§ 63.7525 and 63.7535; and b. Reducing the data to 12-hour block averages; and c. Maintaining the 12-hour average secondary current and voltage or total power input at or above the operating limits established during the performance test according to §§ 63.7530(c).
7. Fuel Pollutant Content	a. Only burning the fuel types and fuel mixtures used to demonstrate compliance with the applicable emission limit according to § 63.7530(c) or (d) as applicable; and b. Keeping monthly records of fuel use according to § 63.7540(a).

As stated in § 63.7550, you must comply with the following requirements for reports:

TABLE 9 TO SUBPART DDDDD OF PART 63—REPORTING REQUIREMENTS

You must submit a(n) . . .	The report must contain . . .	You must submit the report . . .
1. Compliance report	a. Information required in § 63.7550(c)(1) through (11); and b. If there are no deviations from any emission limitation (emission limit and operating limit) that applies to you and there are no deviations from the requirements for work practice standards in Table 8 to this subpart that apply to you, a statement that there were no deviations from the emission limitations and work practice standards during the reporting period. If there were no periods during which the CMSs, including continuous emissions monitoring system, continuous opacity monitoring system, and operating parameter monitoring systems, were out-of-control as specified in § 63.8(c)(7), a statement that there were no periods during which the CMSs were out-of-control during the reporting period; and	Semiannually according to the requirements in § 63.7550(b).

TABLE 9 TO SUBPART DDDDD OF PART 63—REPORTING REQUIREMENTS—Continued

You must submit a(n) . . .	The report must contain . . .	You must submit the report . . .
	c. If you have a deviation from any emission limitation (emission limit and operating limit) or work practice standard during the reporting period, the report must contain the information in § 63.7550(d). If there were periods during which the CMSs, including continuous emissions monitoring system, continuous opacity monitoring system, and operating parameter monitoring systems, were out-of-control, as specified in § 63.8(c)(7), the report must contain the information in § 63.7550(e); and d. If you had a startup, shutdown, or malfunction during the reporting period and you took actions consistent with your startup, shutdown, and malfunction plan, the compliance report must include the information in § 63.10(d)(5)(i).	
2. An immediate startup, shutdown, and malfunction report if you had a startup, shutdown, or malfunction during the reporting period that is not consistent with your startup, shutdown, and malfunction plan, and the source exceeds any applicable emission limitation in the relevant emission standard.	a. Actions taken for the event; and b. The information in § 63.10(d)(5)(ii)	i. By fax or telephone within 2 working days after starting actions inconsistent with the plan; and ii. By letter within 7 working days after the end of the event unless you have made alternative arrangements with the permitting authority.

As stated in § 63.7565, you must comply with the applicable General Provisions according to the following:

TABLE 10 TO SUBPART DDDDD OF PART 63—APPLICABILITY OF GENERAL PROVISIONS TO SUBPART DDDDD

Citation	Subject	Applies to subpart DDDDD
§ 63.1	Applicability	Yes.
§ 63.2	Definitions	Yes. Additional terms defined in § 63.7575.
§ 63.3	Units and Abbreviations	Yes.
§ 63.4	Prohibited Activities and Circumvention	Yes.
§ 63.5	Preconstruction Review and Notification Requirements.	Yes.
§ 63.6(a), (b)(1)–(b)(5), (b)(7), (c), (f)(2)–(3), (g), (h)(2)–(h)(9), (i), (j).	Compliance with Standards and Maintenance Requirements.	Yes.
§ 63.6(e)(1), (e)(3), (f)(1), and (h)(1)	Startup, shutdown, and malfunction requirements and Opacity/Visible Emission Limits.	No. Standards apply at all times, including during startup, shutdown, and malfunction events.
§ 63.7(a), (b), (c), (d), (e)(2)–(e)(9), (f), (g), and (h).	Performance Testing Requirements	Yes.
§ 63.7(e)(1)	Conditions for conducting performance tests.	No. Subpart DDDDD specifies conditions for conducting performance tests at § 63.7520.
§ 63.8	Monitoring Requirements	Yes.
§ 63.9	Notification Requirements	Yes.
§ 63.10(a), (b)(1), (b)(2)(i)–(iii), (b)(2)(vi)–(xiv), (c), (d)(1)–(2), (e), and (f).	Recordkeeping and Reporting Requirements	Yes.
§ 63.10(b)(2)(iv)–(v), (b)(3), and (d)(3)–(5)	.....	No.
§ 63.10(c)(15)	Allows use of SSM plan	No.
§ 63.11	Control Device Requirements	No.
§ 63.12	State Authority and Delegation	Yes.
§ 63.13–63.16	Addresses, Incorporation by Reference, Availability of Information, Performance Track Provisions.	Yes.
§ 63.1(a)(5), (a)(7)–(a)(9), (b)(2), (c)(3)–(4), (d), 63.6(b)(6), (c)(3), (c)(4), (d), (e)(2), (e)(3)(ii), (h)(3), (h)(5)(iv), 63.8(a)(3), 63.9(b)(3), (h)(4), 63.10(c)(2)–(4), (c)(9).	Reserved	No.

[FR Doc. 2010–10827 Filed 6–3–10; 8:45 am]

BILLING CODE 6560–50–P

Reader Aids

Federal Register

Vol. 75, No. 107

Friday, June 4, 2010

CUSTOMER SERVICE AND INFORMATION

Federal Register/Code of Federal Regulations	
General Information, indexes and other finding aids	**202–741–6000**
Laws	**741–6000**
Presidential Documents	
Executive orders and proclamations	**741–6000**
The United States Government Manual	**741–6000**
Other Services	
Electronic and on-line services (voice)	**741–6020**
Privacy Act Compilation	**741–6064**
Public Laws Update Service (numbers, dates, etc.)	**741–6043**
TTY for the deaf-and-hard-of-hearing	**741–6086**

ELECTRONIC RESEARCH

World Wide Web

Full text of the daily Federal Register, CFR and other publications is located at: **http://www.gpoaccess.gov/nara/index.html**

Federal Register information and research tools, including Public Inspection List, indexes, and links to GPO Access are located at: **http://www.archives.gov/federal__register**

E-mail

FEDREGTOC-L (Federal Register Table of Contents LISTSERV) is an open e-mail service that provides subscribers with a digital form of the Federal Register Table of Contents. The digital form of the Federal Register Table of Contents includes HTML and PDF links to the full text of each document.

To join or leave, go to **http://listserv.access.gpo.gov** and select *Online mailing list archives, FEDREGTOC-L, Join or leave the list (or change settings);* then follow the instructions.

PENS (Public Law Electronic Notification Service) is an e-mail service that notifies subscribers of recently enacted laws.

To subscribe, go to **http://listserv.gsa.gov/archives/publaws-l.html** and select *Join or leave the list (or change settings);* then follow the instructions.

FEDREGTOC-L and **PENS** are mailing lists only. We cannot respond to specific inquiries.

Reference questions. Send questions and comments about the Federal Register system to: **fedreg.info@nara.gov**

The Federal Register staff cannot interpret specific documents or regulations.

Reminders. Effective January 1, 2009, the Reminders, including Rules Going Into Effect and Comments Due Next Week, no longer appear in the Reader Aids section of the Federal Register. This information can be found online at **http://www.regulations.gov.**

CFR Checklist. Effective January 1, 2009, the CFR Checklist no longer appears in the Federal Register. This information can be found online at **http://bookstore.gpo.gov/.**

FEDERAL REGISTER PAGES AND DATE, JUNE

30267–30686 1
30687–31272 2
31273–31662 3
31663–32074 4

CFR PARTS AFFECTED DURING JUNE

At the end of each month, the Office of the Federal Register publishes separately a List of CFR Sections Affected (LSA), which lists parts and sections affected by documents published since the revision date of each title.

2 CFR
2339 31273

5 CFR
875 30267

7 CFR
916 31275
917 31275
923 31663
1218 31279
1470 31610
Proposed Rules:
319 30303
930 31719
1215 31730

10 CFR
Proposed Rules:
430 ..... 31224, 31323

12 CFR
205 31665
230 31673
611 30687
613 30687
615 30687
619 30687
620 30687

14 CFR
39 ..... 30268, 30270, 30272, 30274, 30277, 30280, 30282, 30284, 30287, 30290, 30292, 30687, 31282
65 31283
71 ..... 30295, 30689, 31677
91 30690
406 30690
Proposed Rules:
39 ..... 30740, 31324, 31327, 31329, 31330, 31332, 31731, 31734
65 30742
71 30746

15 CFR
734 31678
744 31678
740 31678
748 31678
750 31678
766 31678
774 31678

16 CFR
320 31682
1215 ..... 31688, 31691

20 CFR
404 30692
439 31273

24 CFR
Proposed Rules:
3500 31334

25 CFR
900 31699
1000 31699

26 CFR
Proposed Rules:
1 31736

27 CFR
478 31285

29 CFR
1404 30704

33 CFR
100 30296
117 ..... 30299, 30300
165 ..... 30706, 30708
Proposed Rules:
117 ..... 30305, 30747, 30750
165 30753

34 CFR
Proposed Rules:
Ch. VI 31338

38 CFR
Proposed Rules:
17 30306

39 CFR
111 ..... 30300, 31288, 31702
Proposed Rules:
501 30309

40 CFR
7 31702
51 31514
52 ..... 30710, 31288, 31290, 31306, 31514, 31709, 31711
63 31317
70 31514
71 31514
180 31713
260 31716
261 31716
262 31716
263 31716
264 31716
265 31716
266 31716
268 31716
270 31716
Proposed Rules:
7 31738
52 ..... 30310, 31340

60 31938
63 ....31896, 32006
241 31844

42 CFR

Proposed Rules:
412 ....30756, 30918
413 ....30756, 30918

44 CFR

Proposed Rules:
67 ....31361, 31368

46 CFR

501 31320

47 CFR

36 30301
Proposed Rules:
73 30756

49 CFR

1002 30711
1011 30711
1152 30711
1180 30711
Proposed Rules:
611 31321

50 CFR

223 30714
600 30484
635 ....30484, 30730, 30732
648 30739
679 ....31321, 31717
Proposed Rules:
17 ....30313, 30319, 30338, 30757, 30769, 31387
223 30769
224 30769

LIST OF PUBLIC LAWS

This is a continuing list of public bills from the current session of Congress which have become Federal laws. It may be used in conjunction with "P L U S" (Public Laws Update Service) on 202–741–6043. This list is also available online at *http://www.archives.gov/federal-register/laws.html*.

The text of laws is not published in the **Federal Register** but may be ordered in "slip law" (individual pamphlet) form from the Superintendent of Documents, U.S. Government Printing Office, Washington, DC 20402 (phone, 202–512–1808). The text will also be made available on the Internet from GPO Access at *http://www.gpoaccess.gov/plaws/index.html*. Some laws may not yet be available.

H.R. 1121/P.L. 111–167
Blue Ridge Parkway and Town of Blowing Rock Land Exchange Act of 2009 (May 24, 2010; 124 Stat. 1188)

H.R. 1442/P.L. 111–168
To provide for the sale of the Federal Government's reversionary interest in approximately 60 acres of land in Salt Lake City, Utah, originally conveyed to the Mount Olivet Cemetery Association under the Act of January 23, 1909. (May 24, 2010; 124 Stat. 1190)

H.R. 2802/P.L. 111–169
To provide for an extension of the legislative authority of the Adams Memorial Foundation to establish a commemorative work in honor of former President John Adams and his legacy, and for other purposes. (May 24, 2010; 124 Stat. 1192)

H.R. 5148/P.L. 111–170
To amend title 39, United States Code, to clarify the instances in which the term "census" may appear on mailable matter. (May 24, 2010; 124 Stat. 1193)

H.R. 5160/P.L. 111–171

Haiti Economic Lift Program Act of 2010 (May 24, 2010; 124 Stat. 1194)

S. 1067/P.L. 111–172

Lord's Resistance Army Disarmament and Northern Uganda Recovery Act of 2009 (May 24, 2010; 124 Stat. 1209)

H.R. 5014/P.L. 111–173

To clarify the health care provided by the Secretary of Veterans Affairs that constitutes minimum essential coverage. (May 27, 2010; 124 Stat. 1215)

S. 1782/P.L. 111–174

Federal Judiciary Administrative Improvements Act of 2010 (May 27, 2010; 124 Stat. 1216)

S. 3333/P.L. 111–175

Satellite Television Extension and Localism Act of 2010 (May 27, 2010; 124 Stat. 1218)

Last List May 20, 2010

Public Laws Electronic Notification Service (PENS)

PENS is a free electronic mail notification service of newly enacted public laws. To subscribe, go to *http://listserv.gsa.gov/archives/publaws-l.html*

Note: This service is strictly for E-mail notification of new laws. The text of laws is not available through this service. **PENS** cannot respond to specific inquiries sent to this address.