AUTHENTICATED
U.S. GOVERNMENT
INFORMATION
GPO

Federal Register

Monday,
May 24, 2010

Part II

Department of Labor

Occupational Safety and Health Administration

29 CFR Part 1910

Walking-Working Surfaces and Personal Protective Equipment (Fall Protection Systems); Proposed Rule

DEPARTMENT OF LABOR

Occupational Safety and Health Administration

29 CFR Part 1910

[Docket No. OSHA–2007–0072]

RIN 1218–AB80

Walking-Working Surfaces and Personal Protective Equipment (Fall Protection Systems)

AGENCY: Occupational Safety and Health Administration (OSHA), Department of Labor.

ACTION: Notice of proposed rule.

SUMMARY: OSHA proposes to revise the walking-working surfaces standards and the personal protective equipment standards in our regulations. The proposal is estimated to reduce the number of fall-related employee deaths and injuries by updating the rule to include new technology (including personal fall protection systems) and industry methods. OSHA believes that the proper use of personal fall protection systems can protect employees from injury and death due to falls to different elevations. The proposal reorganizes the rule in a clearer, more logical manner and provides greater compliance flexibility. The proposed rule is written in plain-language to make it easier to understand, thereby facilitating compliance. Additionally, the proposal increases consistency between construction, maritime, and general industry standards, and eliminates duplication.

DATES: Submit comments (including comments on the information-collection (paperwork) determination described under the section titled **SUPPLEMENTARY INFORMATION** of this document), hearing requests, and other information by August 23, 2010. All submissions must bear a postmark or provide other evidence of the submission date. (*See* the following section titled **ADDRESSES** for methods you can use in making submissions.)

ADDRESSES: Comments and hearing requests may be submitted as follows:

Electronic: Comments may be submitted electronically to *http://www.regulations.gov,* which is the Federal eRulemaking Portal. Follow the instructions online for submitting comments.

Facsimile: OSHA allows facsimile transmission of comments and hearing requests that are 10 pages or fewer in length (including attachments). Send these documents to the OSHA Docket Office at (202) 693–1648; hard copies of these documents are not required. Instead of transmitting facsimile copies of attachments that supplement these documents (*e.g.,* studies, journal articles), commenters may submit these attachments, in triplicate hard copy, to the OSHA Docket Office, Technical Data Center, Room N–2625, OSHA, U.S. Department of Labor, 200 Constitution Ave., NW., Washington, DC 20210. These attachments must clearly identify the sender's name, date, subject, and Docket ID (*i.e.,* OSHA–2007–0072) so that the Agency can attach them to the appropriate document.

Regular mail, express delivery, hand (courier) delivery, and messenger service: Submit three copies of comments and any additional material (*e.g.,* studies, journal articles) to the OSHA Docket Office, Docket ID OSHA–2007–0072 or RIN No. 1218–AB80, Technical Data Center, Room N–2625, OSHA, Department of Labor, 200 Constitution Ave., NW., Washington, DC 20210; telephone: (202) 693–2350. (OSHA's TTY number is (877) 889–5627.) Please contact the OSHA Docket Office for information about security procedures concerning delivery of materials by express delivery, hand delivery, and messenger service. The hours of operation for the OSHA Docket Office are 8:15 a.m. to 4:45 p.m., e.t.

Instructions. All submissions must include the Agency name and the OSHA Docket ID (i.e., OSHA–2007–0072). Comments and other material, including any personal information, are placed in the public docket without revision, and will be available online at *http://www.regulations.gov.* Therefore, the Agency cautions commenters about submitting statements they do not want made available to the public, or submitting comments that contain personal information (either about themselves or others) such as Social Security numbers, birth dates, and medical data.

Docket. To read or download comments or other material in the docket, go to *http://www.regulations.gov* or to the OSHA Docket Office at the address above. Documents in the docket are listed in the *http://www.regulations.gov* index; however, some information (*e.g.,* copyrighted material) is not publicly available to read or download through this Web site. All submissions, including copyrighted material, are available for inspection and copying at the OSHA Docket Office. Contact the OSHA Docket Office for assistance in locating docket submissions.

FOR FURTHER INFORMATION CONTACT:

General information and press inquiries. Contact Ms. Jennifer Ashley, Director, Office of Communications, OSHA, U.S. Department of Labor, Room N–3647, 200 Constitution Avenue, NW., Washington, DC 20210; telephone (202) 693–1999 or fax (202) 693–1634.

Technical inquiries. Contact Ms. Virginia Fitzner, Directorate of Standards and Guidance, Room N–3609, OSHA, U.S. Department of Labor, 200 Constitution Avenue, NW., Washington, DC 20210; telephone (202) 693–2052 or fax (202) 693–1663.

Copies of this Federal Register notice. Available from the OSHA Office of Publications, Room N–3101, U.S. Department of Labor, 200 Constitution Avenue, NW., Washington, DC 20210; telephone (202) 693–1888.

Electronic copies of this notice. Go to OSHA's Web site (*http://www.osha.gov*), and select "Federal Register," "Date of Publication," and then "2010."

Additional information for submitting documents. See section XI ("Public Participation") of this notice.

SUPPLEMENTARY INFORMATION:

Replacement of previously proposed rule. This proposed revision of subparts D and I replaces the proposed rules originally published in the **Federal Register** (55 FR 47660) on April 10, 1990, and republished in the **Federal Register** on May 2, 2003 (69 FR 23528).

References and exhibits. In this **Federal Register** notice, OSHA references a number of supporting materials. References to these materials are given as "Ex." followed by the number of the document (*e.g.,* Ex. 23). The referenced materials are posted in Docket Nos. OSHA–2007–0072, OSHA–S041–2006–0666 (formerly Docket No. S–041), OSHA–S029–2006–0662 (formerly Docket No. S–029), and OSHA–S057–2006–0680 (formerly Docket No. S–057) *all* of which are available at *http://www.regulations.gov.* The documents are also available at the OSHA Docket Office (*see* **ADDRESSES** section). For further information about accessing exhibits referenced in this **Federal Register** notice, *see* the "Public Participation" section of this document.

Table of Contents

I. Background
II. Analysis of Risk
III. Issues
IV. Summary and Explanation of the Proposed Rule
V. Preliminary Economic and Initial Regulatory Flexibility Screening Analysis
VI. Applicability of Existing National Consensus Standards
VII. OMB Review Under the Paperwork Reduction Act of 1995

VIII. Federalism
IX. State Plan States
X. Unfunded Mandates Reform Act
XI. Public Participation
XII. Authority and Signature
XIII. Proposed Regulatory Text

I. Background

The majority of employees in general industry workplaces walk or work on level surfaces, such as floors, where slips, trips, and falls are common occurrences. These occurrences, however, are not likely to result in major injuries or fatalities. On the other hand, there are many employees who work on ladders, scaffolds, towers, outdoor advertising signs, and similar surfaces where slips, trips, or falls are likely to result in serious injury or death.

The existing OSHA general industry standards recognize the use of guardrails and physical barriers as the primary methods for employee protection against falls. However, those standards do not directly recognize that personal fall protection systems can also provide effective means for employee protection. OSHA believes that the proposed rules will give employers the necessary flexibility to decide which fall protection method or system works best for the work operation being performed, while ensuring employees receive a level of protection that is effective and necessary. OSHA believes many of these slips, trips, and falls can be prevented and has devoted many years to assembling and analyzing information aimed at the elimination and prevention of hazards that cause these incidents. The Agency used that information to form the basis for this proposed rule.

History of the earlier rulemaking effort. OSHA's efforts to address slips, trips, and falls began with its initial standards. Those standards, which address a variety of walking-working surface hazards, were part of the initial package of standards promulgated by OSHA in 1971 under section 6(a) of the Occupational Safety and Health Act of 1970 (the Act) (29 U.S.C. 651 *et seq.*). Since that time, a number of interested parties suggested changes to the standard. In particular, the suggested changes addressed updating the existing standard to reflect the current national consensus standards.

Subpart D. Efforts to revise the initial standards in subpart D have been ongoing for many years. In September 1973, OSHA published a proposed revision of subpart D in the **Federal Register** (38 FR 24300).

In April 1976, OSHA withdrew the 1973 proposal (41 FR 17227) because it was outdated. In the same year, to obtain public input on revising subpart D, OSHA conducted several informal public meetings around the country. After reviewing the information gathered from the public, OSHA determined that a more thorough, scientific and technical research effort was needed to develop objective information upon which an effective revision to the subpart D standard could be based.

From 1976 through the 1980s, OSHA accumulated a wide variety of technical information. This included recommendations for fall prevention, ladders, scaffolds, slip-resistance, and handrails from the University of Michigan; studies concerning guardrails, slip-resistance, scaffolds, and fall prevention from the National Bureau of Standards (now the National Institute of Standards and Technology); analysis of various walking-working surfaces from Texas Tech University; accident and injury data from the Bureau of Labor Statistics; and various national consensus standards from the American National Standards Institute, American Society of Testing and Materials, and the American Society of Mechanical Engineers. This technical information provided the basis for a new proposal that was published in 1990; that proposal was not finalized due to other regulatory activities that took precedent.

Subpart I. Many of the Personal Protective Equipment (PPE) standards in subpart I, like subpart D, were also adopted by OSHA under section 6(a) of the Act. Existing subpart I contains general requirements for personal protective equipment, as well as specific performance and use requirements for certain types of personal protective equipment, including eye and face protection, respiratory protection, head protection, foot protection, protective clothing, hand protection, and electrical protective devices. Existing subpart I does not, however, contain any specific requirements addressing the performance or use of PPE used for *fall* protection; hence the need for this proposal.

OSHA first proposed to revise subpart I to address fall protection PPE in 1990 in combination with a proposal to revise subpart D. As noted above, the 1990 rule was not finalized. On April 6, 1994, OSHA updated other portions of the PPE standard (59 FR 16334) by adding new requirements for employers to conduct hazard assessments; to select the proper PPE; to remove defective or damaged PPE from service; and to provide training in the proper use, care, and disposal of PPE. Those provisions, however, only applied to PPE used for face and eye, head, foot, and hand protection. In this rulemaking, OSHA proposes to require the hazard assessments to address PPE used for fall protection as well.

The combined proposals for subparts D and I. On April 10, 1990, OSHA proposed to revise both subparts D and I (55 FR 13360 and 55 FR 13423, respectively). The proposals were intended to remove ambiguities and redundancies in the existing standards, simplify and consolidate existing provisions, and use performance language instead of specifications where possible. Additionally, OSHA proposed adding new requirements to subpart I, Personal Protective Equipment, to set performance and use criteria for fall protection equipment. The two subparts were interdependent with respect to personal fall protection systems; that is, the duty requirements for personal fall protection systems were in subpart D and the criteria for the systems were in subpart I. OSHA received comments and held a public hearing on the proposals.

On May 2, 2003, OSHA reopened the rulemaking record and republished the 1990 proposal (68 FR 23528) to refresh the record due to the length of time that had elapsed since 1990. Based upon comments and information received in that reopening, and because of technological advances, particularly within the fall protection industry, OSHA determined the best course of action was to issue a new proposal for subparts D and I.

Today's proposed rule. Today's proposed rule replaces the 1990 proposals (55 FR 13360). OSHA proposes to revise subpart D to accomplish the following:

(1) Reflect current industry practices and national consensus standards;

(2) Harmonize provisions, when possible, with other OSHA provisions (e.g., the construction standards in 29 CFR part 1926 and the Shipyard Employment Standards in 29 CFR part 1915); and

(3) Use performance-oriented language when possible, rather than specification-oriented language.

In subpart I, OSHA proposes to add new specific performance and use requirements for personal *fall* protection equipment. Existing subpart I contains general requirements for all types of personal protective equipment, as well as specific performance and use requirements for other types of personal protective equipment, but it does not specifically contain criteria for fall protection PPE.

To be effective, fall protection systems must be both strong enough to provide

the necessary fall protection and capable of absorbing fall impact so that the forces imposed on employees when stopping falls do not result in injury or death. The ability of the human body to tolerate the arresting force imposed on it by a fall protection system has been addressed directly in general industry only by § 1910.66, Powered Platforms for Building Maintenance. Throughout this proposed rule, OSHA will make reference to the general industry powered platform standard; the construction industry standard for fall protection; and the shipyard employment standards for personal fall protection systems. Experience gained by the Agency in enforcing those rules provides additional guidance in the development of this proposed rule. OSHA's objective is to make consistent all of its requirements for the use of personal fall protection systems. The listed fall protection standards contain requirements that are identical to, or essentially the same as, those proposed in this document.

The proposed rule for subpart I, to be codified at § 1910.140 (Fall protection), would apply whenever another standard requires or allows the use of fall protection PPE. In these situations, the system used must comply with the requirements of § 1910.140. For example, subparts D, F, and R of the general industry standards (part 1910) each contain a requirement (a duty) to use fall protection. Where an employer uses a *personal* fall protection system to meet the duty, that system would have to meet the criteria and performance requirements proposed in this rule. Many of the requirements proposed here for personal fall arrest systems are already in effect when employees are working on platforms regulated by OSHA's general industry standard in subpart F—Powered Platforms for Building Maintenance (§ 1910.66). Appendix C of § 1910.66 sets out mandatory requirements for personal fall arrest systems. Therefore, the entire powered platform rulemaking record is hereby incorporated into this proposed rulemaking (Dockets S–700 and S–700A).

In addition to proposing new requirements for personal protective equipment (PPE) used for fall protection, OSHA proposes to amend a number of general industry standards that already set a duty to use PPE by requiring that PPE meet the new requirements of subpart I. For example, paragraph (g) of § 1910.269 requires personal fall arrest systems to meet the requirements of subpart M of part 1926 (the construction industry requirements). This provision would be revised to require personal fall arrest systems to meet the mostly parallel criteria requirements of subpart I of 1910 (the general industry requirements). Subpart M of part 1926 differs from proposed subpart I in that subpart M addresses fall arrest systems used in the construction of elevator shafts, while subpart I does not address the construction of elevator shafts. In addition, subpart I uses performance language with regard to anchorages for fall arrest systems, while subpart M specifically prohibits the use of guardrails as anchorage points.

Finally, OSHA proposes to add two non-mandatory appendices to subpart I to provide examples of test methods and procedures that will assist employers and PPE manufacturers to demonstrate compliance with the criteria proposed in § 1910.140.

OSHA believes that many equipment manufacturers are currently following the criteria and test methods of the above-mentioned standards. Therefore, the vast majority of equipment covered by the proposed rule already complies with the requirements in this proposal. Also, OSHA notes that equipment that meets the proposed standards is readily available to any employer that does not already meet the proposed standard because personal fall protection systems required to be used by other OSHA standards (*e.g.,* the construction standards in 29 CFR part 1926 and the Shipyard Employment Standards in 29 CFR part 1915) must meet essentially the same criteria and testing requirements as in this proposed rule.

The OSH Act requires OSHA to make certain findings with respect to standards. One of these findings, specified by section 3(8) of the OSH Act, requires an OSHA standard to address a significant risk and to reduce this risk significantly. (*See Industrial Union Dep't* v. *American Petroleum Institute,* 448 U.S. 607 (1980).) As discussed in section II of this preamble, OSHA preliminarily finds that slips, trips, and falls constitute a significant risk, and estimates that the proposed standard will prevent 20 fatalities and 3,706 injuries annually. Section 6(b) of the OSH Act requires OSHA to determine if its standards are technologically and economically feasible. As discussed in section V of this preamble, OSHA preliminarily finds that this proposed standard is economically and technologically feasible.

The Regulatory Flexibility Act (5 U.S.C. 601, as amended) requires that OSHA determine whether a proposed standard will have a significant economic impact on a substantial number of small firms. As discussed in section VI, OSHA examined the small firms affected by this standard and certifies that the proposed standard will not have a significant impact on a substantial number of small firms.

Executive Order 12866 requires that OSHA estimate the benefits, costs, and net benefits of proposed standards. The table below summarizes OSHA's preliminary findings with respect to the estimated costs, benefits, and net benefits of this standard. As is clear, the annual benefits are significantly in excess of the annual costs. However, it should be noted that under the OSH Act, OSHA does not use the magnitude of net benefits as the decisionmaking criterion in determining what standards to promulgate.

NET BENEFITS AND COST EFFECTIVENESS OF THE PROPOSED REVISION TO OSHA'S WALKING-WORKING STANDARDS

	Annualized Costs
§ 1910.22 General Requirements	$15.7 million.
§ 1910.23 Ladders	$9.7 million.
§ 1910.24 Step Bolts and Manhole Steps	$3.7 million.
§ 1910.27 Scaffolds	$73.0 million.
§ 1910.28 Duty to Have Fall Protection	$0.09 million.
§ 1910.29 Fall Protection Systems Criteria and Practices	$8.4 million.
§ 1910.30 Training Requirements	$44.1 million.
§ 1910.140 Fall Protection	$18.5 million.
Total Annual Costs	$173.2 million.

NET BENEFITS AND COST EFFECTIVENESS OF THE PROPOSED REVISION TO OSHA'S WALKING-WORKING STANDARDS—Continued

Annual Benefits	
Number of Injuries Prevented	3,706.
Number of Fatalities Prevented	20.
Monetized Benefits (assuming $50,000 per injury and $7.2 million per fatality prevented)	$328.5 million.
OSHA standards that are updated and consistent with voluntary standards	Unquantified.
Net Benefits (benefits minus costs)	$155.4 million.

Cost Effectiveness: Compliance with the proposed standards would result in the prevention of 1 fatality and 231 injuries for every $10 million in costs, or alternatively, $1.90 in benefits per dollar of costs.

Source: U.S. Dept. of Labor, OSHA, Directorate of Evaluation and Analysis, Office of Regulatory Analysis, 2009.

II. Analysis of Risk

Nature of the risk. Falls and other hazards associated with walking-working surfaces, primarily resulting in slips, trips, and falls, and hazards leading to combustible dust explosions and other accidents, are addressed in this proposal. These hazards are encountered by millions of employees working in industry sectors regulated by OSHA under 29 CFR part 1910. There are many causal factors for slips, trips, and falls, such as ice, wet areas, grease, loose flooring or carpeting, inattention to surroundings, uneven scaffolding planking, clutter, worn rope on descent systems, open desk drawers and filing cabinets, damaged ladder steps, and a more subtle cause—a belief that the action being taken will not lead to an accident. For example, where a ladder is not readily available, employees may improvise and use a chair, or even a 5-gallon bucket, as a way to reach a higher level. In fact, accident data show that many falls could be prevented if existing OSHA regulations and recommended safe practices were followed. The hazards generally can be grouped into three (often interrelated) factors: Equipment, human, and environmental. Examples of some equipment factors include improper footwear, uneven surfaces, foreign substances on surfaces such as oil or litter, and unguarded sides and edges of elevated platforms. Some human factors are inattention, haste, human error, failure to follow instructions, and fatigue. Environmental factors may include poor lighting and weather-related conditions. The presence of multiple factors increases the risk. For instance, a polished marble floor may not present a slipping hazard to someone wearing rubber-soled shoes; however, when the floor is wet from mopping or snow being tracked in from the outdoors, the risk of slipping greatly increases. The addition of other factors such as poor lighting, inattention, and haste are likely to further increase the risk.

Slips and trips can lead to falls that cause injuries such as back strains or other injuries when individuals try to "catch" themselves. Falls on the same level can cause injuries such as sprains, strains, fractures, and contusions that may affect any area of the body and, on occasion, can be fatal. Falling from an elevated surface increases injury severity and the likelihood of fatalities. Falls from elevations occur in all industries, in all occupations, and in a myriad of work settings—from the employee washing windows from a rope descent system 40 feet from the ground, to the stock clerk retrieving goods from a shelf using a 4-foot stepladder. These tasks represent only two of the numerous tasks that can result in injury or death to employees caused by failures to recognize fall hazards, to use fall protection equipment, or to take appropriate action to abate fall hazards.

Identifying fall hazards and deciding how best to protect employees is the first step in reducing or eliminating the hazards. Therefore, OSHA is proposing to expand existing § 1910.132(d), Hazard assessment and equipment selection, to apply to hazards covered in new § 1910.140—Fall protection. This expansion would require employers to assess the workplace to identify fall hazards and select and require the use of appropriate PPE. In addition, the employer must train (*see* § 1910.132(f)) the employee on the proper use of PPE. Once employers determine that the use of PPE is the most appropriate way to protect their employees from falls, the proposed rule requires employers to provide equipment that meets certain strength and performance requirements.

Injury and fatality data. Recent employment data taken from the U.S. Census Bureau's 2007 Statistics of U.S. Businesses and the Bureau of Labor Statistics' (BLS) Occupational Employment Statistics indicate that over 106 million employees work in over 6 million establishments regulated by OSHA under its subpart D standards. Slips, trips, and falls constitute 15 percent of all accidental deaths, and are second only to motor vehicles as a cause of employee fatalities.

The BLS Census of Fatal Occupational Injuries (CFOI) has listed falls as one of the leading causes of traumatic injury and death in the workplace for many years. Fall-related injury and fatality statistics show that employees encounter hazards associated with walking-working surfaces at their worksites on a daily basis.

Tables V–10 and V–11 of section V ("Preliminary Economic and Initial Regulatory Flexibility Screening Analysis") depict BLS data from 1992 to 2004. During this time period, BLS reported an annual average of 300 fatal falls, 213 (71%) of which resulted from falling from a higher level. Furthermore, of an annual average of 299,404 non-fatal falls resulting in lost-workday injuries, 79,593 (26%) were as a result of falling from a higher level.

An examination of more recent BLS data, shows that falls continue to be a significant source of workplace fatalities.

FATAL FALLS

	Fatal falls	Fatal falls from height	Percentage of fatal falls that were falls from height
1992–2004 (Average per Year)	300	213	71
2005	320	257	80
2006	343	285	83
2007	357	267	75

According to this table, the number of falls resulting in death is increasing, although the percentage of fatal falls that are due to falls from heights dropped in 2007.

Significance of risk. As described more fully in section V of this preamble, many of the falls that occur in general industry could be prevented through the maintenance of safe conditions and the use of safe work practices on walking-working surfaces, as well as through the proper use of appropriate personal fall protection equipment when necessary. The Agency estimates that compliance with the proposed requirements in subparts D and I would prevent 20 fall-related fatalities and 3,706 fall related lost-workday injuries annually (*see* section V of this notice).

The Agency has concluded, on a preliminary basis, that these proposed standards address a significant risk. Furthermore, OSHA believes that compliance with these proposed requirements is reasonably necessary to protect employees from fall hazards and would substantially reduce this risk.

Basis for Agency action. In the 1990 proposed rule (55 FR 13361), OSHA described a number of studies and investigations conducted by both government agencies (OSHA, Consumer Product Safety Commission, the Bureau of Labor Statistics, and the former National Bureau of Standards, now called the National Institute for Standards and Technology) and academia (University of Michigan, Texas A&M, and the University of Texas). These studies, which are available in the earlier rulemaking docket (S–029) or from the sources listed in Appendix C of the 1990 proposed rule, provide useful information about the ways in which employees fall from various surfaces, and the forces applied when stepping on surfaces, particularly ladders and stairways. Additionally, they provide information about the strength necessary for various surfaces, the minimum and maximum spacing between rungs on ladders and steps on stairways, and other similar details. They also address the need for toe and hand clearances, the height of stair rail and guardrail systems, and the size of openings in guardrails that would permit passage of employees. Many of the recommendations contained in referenced reports and studies are validated by inclusion of identical or essentially similar requirements in the national consensus standards applicable to the topic.

There are various ways of protecting employees from the hazards associated with walking-working surfaces. This proposal, in conjunction with the criteria for personal fall protection systems in the subpart I proposed rule, addresses conventional fall protection systems such as guardrail systems, safety net systems, and personal fall protection systems (travel restraint systems, fall arrest systems, and positioning systems). The proposal also includes non-conventional means such as allowing employees to work in a designated area (without conventional fall protection), provided they receive specific training and use safe work practices.

OSHA intends to ensure that all PPE requirements for fall protection in general industry are the same, and therefore is proposing to replace existing requirements in other general industry standards with references to subpart I, Personal Fall Protection Systems. This change will facilitate compliance, since all general industry fall protection criteria will be consolidated into subpart I.

Additionally, the rule requires employers to take easy-to-use measures, such as placing covers over holes in floors and using indicators or signs to warn employees that they are approaching a fall hazard.

The proposed standard would also require employers to ensure that walking-working surfaces are designed, constructed, maintained, and used in a safe manner, and that proper work practices are used by the employees. For example, when climbing a ladder, the employee must always maintain three points of contact and never use the top of a stepladder as a step. Many of the design requirements in the proposed standard (such as those for step bolts, mobile ladder stands, and portable ladders) reflect the manufacturing specifications prescribed by national consensus standards. In most instances, the Agency used the most recent version of consensus standards in writing this proposal.[1]

OSHA proposes the requirements in subparts D and I as the minimum necessary to protect employees from significant hazards that can cause falls and other events which may result in serious injury and death. OSHA believes that many employers are already in compliance with the updated proposed rules because the majority of the proposed requirements are either already in existing OSHA rules or are prescribed by national consensus standards organizations in voluntary standards on the topic. The Agency believes that codifying more current consensus standard provisions, establishing personal fall protection systems criteria in subpart I, and specifying training requirements will lead to higher compliance with standards. The updated rules will make it easier and more effective to prevent slips, trips, and falls and other events.

A safety or health standard is a standard "which requires conditions, or the adoption or use of one or more practices, means, methods, operations, or processes, reasonably necessary or appropriate to provide safe or healthful employment" (29 U.S.C. 652(8)). In addition, all standards must be highly protective (*see* 58 FR at 16614–16615; *International Union, UAW* v. *OSHA,* 37 F.3d 669 (DC Cir. 1994)) and, whenever practical, standards shall "be expressed in terms of objective criteria and of the performance desired." *Id.* In this preamble, OSHA discusses the hazards associated with walking and working on elevated, slippery, or other surfaces, and explains why the provisions of the proposed rule are reasonably necessary to protect affected employees from those risks. The Agency estimates that compliance with the revised walking-

[1] Consensus standards are updated on a cyclical basis, thus staying current with industry practice and technological advances.

working surfaces standard will reduce the risks associated with these hazards by preventing an estimated 20 fatalities annually based upon the 1992–2007 BLS data and 1995–2001 OSHA data. OSHA believes that this constitutes a substantial reduction in the risk of material harm. Since falls from heights result in more fatalities and more serious injuries than falls on the same level, this proposed rule places emphasis on falls from heights.

III. Issues

Issue #1—Fall Protection on Rolling Stock and Motor Vehicles

OSHA is requesting additional comment on whether specific regulations are needed to cover falls from rolling stock and commercial motor vehicles. Existing subpart D does not specifically address or exclude fall protection on rolling stock or motor vehicles from coverage. For the purposes of this issue, the term "rolling stock" means any locomotive, railcar, or vehicle operated exclusively on a rail or rails, or a trolley bus operated by electric power supplied from an overhead wire. The term "motor vehicle" means commercial buses, vans, and trucks (including tractor trailer trucks, tank trucks, and hopper trucks). For the purposes of this rule, the term "motor vehicle" does not include powered industrial trucks. OSHA is specifically seeking comment on whether it should include requirements specifying that when employees are exposed to falls from rolling stock and motor vehicles at heights greater than 4 feet, protective work practices, methods, or systems must be instituted. OSHA is also requesting comment on how it should define "rolling stock" and "motor vehicles," or if the terms as defined are sufficiently inclusive.

The 1990 "Notice of Proposed Rulemaking for Walking-Working Surfaces" (68 FR 23530) generated one comment on the subject. The American Feed Industry Association said:

> The section on Scope and Applications provides that this Subpart D does not apply to "surfaces that are an integral part of self-propelled, motorized mobile equipment". [§ 1910.21.] This is, obviously and correctly, meant to exclude work surfaces that are on railroad cars, truck trailers, and barges.
>
> OSHA should add a line to section 1910.21(a)(1) that says: Railroad cars, truck trailers, barges and similar equipment designed for use with a separable source of propulsion are excluded from coverage by this subpart even when temporarily detached from any source of propulsion for purposes of loading or unloading.

In 1996, OSHA was asked to clarify its fall protection rules involving the unloading of grain from rolling stock (meaning rail cars). In response, OSHA issued a memorandum to its Regional Administrators on October 18, 1996 (Ex. OSHA–S029–2006–0662–0018), directing OSHA inspectors not to cite rolling stock under subpart D. The memorandum also said that it would not be appropriate to use the PPE standard (29 CFR 1910.132(d)) to cite employee exposure to fall hazards on the tops of rolling stock unless the rolling stock was positioned inside of or contiguous to a building or other structure where the installation of fall protection is feasible. The memorandum did not result in clear direction to the public or to OSHA's field staff. As a result, OSHA raised the issue of fall protection on rolling stock and motor vehicles in a separate **Federal Register** notice—the 2003 Reopening Notice. In response to that notice, OSHA received a number of comments that supported and opposed the inclusion of specific requirements regulating fall hazards from rolling stock and motor vehicles.

Commenters expressed diverse views on the approach that OSHA should pursue to regulate falls from rolling stock and motor vehicles. Some commenters supported an exclusion of rolling stock and motor vehicles from subpart D while other commenters supported the inclusion of new, specific rules. Referring to advances in fall protection technology, some of these commenters said they believed that it would be feasible to protect employees from falls, and cited the type of equipment that could be used to provide that protection. Other commenters simply stated their support for the policy OSHA set forth in the 1996 memorandum. However, the understanding of the 1996 memorandum also varied among commenters. Commenters provided little information to the record regarding injuries and deaths associated with falls from rolling stock and motor vehicles.

OSHA plans to continue gathering information and evidence to determine whether there is a need to propose *specific* requirements for the protection of employees exposed to falls from rolling stock and motor vehicles. Additionally, OSHA needs more information about what employers are presently doing and any feasibility and cost concerns associated with a requirement to provide protection. Therefore, OSHA is not including any *specific* requirements pertinent to rolling stock and motor vehicles in proposed § 1910.28. Rather, it will wait until the record is more fully developed to determine the appropriate course of action. If, in response to this issue, the Agency receives sufficient comments and evidence to warrant additional rulemaking, a *separate* proposed rule will be issued.

In an effort to collect and assemble the information needed for OSHA to make an informed decision about the need for specific provisions regulating fall hazards from rolling stock and motor vehicles, the Agency requests comprehensive responses to the questions posed below. The Agency requests that the responses be directed specifically to individual questions and be clearly labeled with the number of the question.

With respect to rolling stock, OSHA is not soliciting information relating to personal fall protection equipment used on rolling stock involved in "railroad operations," which include the movement of equipment over rails. The Federal Railroad Administration's (FRA) "Railroad Occupational Safety and Health Standards Policy Statement" (the Policy Statement) sets out the respective areas of jurisdiction between FRA and OSHA. That Policy Statement provides that FRA has jurisdiction over railroad operations, including personal protective equipment and walking-working surfaces on rolling stock. With regard to FRA's jurisdiction over personal protective equipment, the FRA Policy Statement notes, "OSHA regulations concerning personal protective equipment apply according to their terms, except to the extent the general requirements might be read to require protective equipment responsive to hazards growing out of railroad operations." (*See* 43 FR 10583, 10588 (1978).) Addressing FRA's jurisdiction over walking-working surfaces, the FRA Policy Statement reads, "[OSHA regulations] would not apply with respect to the design of locomotives and other rolling equipment used on a railroad, since working conditions related to such surfaces are regulated by FRA as major aspects of railroad operations." (*Id.* at 10587.) A copy of the FRA's Policy Statement can be found on FRA's Web site. OSHA is, however, requesting comment and information regarding rolling stock not involved in railroad operations, such as, but not limited to, when rolling stock is being loaded or unloaded off railroad property by non-railroad employees or contractors to railroads, or when such rolling stock is being retrofitted or repaired off railroad property.

In regard to rolling stock:

1. In your establishment and/or industry, how many or what percentage of employees working on top of rolling stock are exposed to fall hazards?

2. How are these employees protected from fall hazards while working on such equipment?

3. If employee training on the recognition of fall hazards is provided in your workplace, please describe the nature and frequency of the training.

4. If fall protection equipment is used, please provide detailed information on the types and costs of the fall protection used on rolling stock and please explain how it is used.

5. If fall protection equipment is not used, please explain what technological and/or economic obstacles to such use may be involved.

6. Are there alternative means to protect employees from fall hazards while working on rolling stock? Please explain.

7. What is your safety experience with fall hazards on or from rolling stock?

8. Should OSHA exclude rolling stock from coverage under subpart D? Please explain and provide data and information to support your comments.

In regard to motor vehicles:

9. In your establishment and/or industry, how many or what percentage of employees working on top of motor vehicles are exposed to fall hazards?

10. How are these employees protected from fall hazards while working on such equipment?

11. If employee training on the recognition of fall hazards is provided in your workplace, please describe the nature and frequency of the training.

12. If fall protection equipment is used, please provide detailed information on the types and costs of the fall protection used on motor vehicles and please explain how it is used.

13. If fall protection equipment is not used, please explain what technological and/or economic obstacles may be involved.

14. Are there alternative means to protect employees from fall hazards while working on motor vehicles? Please explain.

15. What is your safety experience with fall hazards on or from motor vehicles?

16. Should OSHA exclude motor vehicles from coverage under subpart D? Please explain and provide data and information to support your comments.

Issue #2—Fall Protection for Employees Standing or Climbing on Stacked Materials (e.g., Steel and Precast Concrete Products)

OSHA is seeking comment on whether there is a need to promulgate a specific requirement in subpart D to address those situations where an employer can demonstrate that it is infeasible or creates a greater hazard to use conventional fall protection to protect employees exposed to falling 4 feet (1.2 m) or more from stacked materials. Some commenters have recommended that OSHA allow the use of safe work practices by trained employees in lieu of conventional fall protection for certain activities. OSHA seeks comment on the current fall protection measures that are in use, and the degree to which conventional fall protection is infeasible or creates a greater hazard.

This issue was brought to OSHA's attention by the Precast Concrete Institute (PCI) and the American Iron and Steel Institute (AISI). OSHA notes that neither the existing nor the proposed revision to subpart D contains a *specific* requirement addressing fall protection for employees who must climb onto and stand on stacked materials (e.g., stacks of steel or concrete products) to perform their work—for example, rigging materials in preparation for transport. Rather, OSHA has enforced the general fall protection rules of subpart D (§ 1910.23) and subpart I (§ 1910.132), as well as the general duty clause (5)(a)(1) of the OSH Act, to protect workers. OSHA has considered the comments of both PCI and AISI and has conducted an information-gathering site visit to become more familiar with the specific concerns raised by the commenters. At this point, OSHA is unconvinced that its existing enforcement policy, which makes allowances for situations where a greater hazard exists or where it is infeasible to provide fall protection, does not adequately address the concerns of the commenters. Nonetheless, OSHA is considering adding a specific requirement to subpart D if sufficient information and support is received to demonstrate the need for such a specific requirement. Additionally, OSHA requests comment on whether there are other similar situations where employees work on stacked materials.

For background, the PCI, in correspondence to OSHA from 2000 to 2003, outlined its concerns regarding the feasibility of providing fall protection for employees working at precast concrete manufacturing plants who are working/walking on precast concrete products. Additionally, PCI expressed concern about the feasibility of providing fall protection for employees who are rigging precast products, placing them on trailers, and securing them for transport to construction sites. Specifically, in a letter dated January 3, 2000 (Ex. 1), PCI asked for an "interpretation and exception for riggers loading/unloading precast concrete products on trucks * * * and for riggers stacking, storing, loading or unloading precast concrete products in the plant, relative to fall protection. * * *" PCI provided the following rationale:

> When stacking, storing, loading or unloading precast concrete products, the need for employees to access the top of concrete products in excess of four (4) feet, for very short periods [of] time, to connect or disconnect lifting devices or rigging is necessary. The use of a conventional fall protection system is a greater hazard and in most cases infeasible because, while installing a fall protection system, employees are exposed to a fall hazard for an extended period of time. Since conventional fall protection is infeasible, employees shall be given individual instruction as well as have a mentor system hands-on process for training.

PCI also noted that OSHA does not require fall protection for employees off-loading the precast concrete products at construction sites because the definition of a walking-working surface in the construction rule excluded "vehicles or trailers on which employees must be located to perform their job duties." PCI included the following recommended work procedure:

> A ladder shall be used to climb onto or off the vehicle deck and product. Employees shall not jump off [the] trailer or from product to product. Corrective and detail work shall be completed at ground level or from a ladder or mobile elevating work platform.

On May 20, 2004, the American Iron and Steel Institute (AISI) raised the same concern in its response to a request for comments from the Office of Management and Budget (67 FR 15014) on the "Draft Report to Congress on the Costs and Benefits of Federal Regulations." (Ex. 2) The AISI identified OSHA's subpart D as needing revision to permit employees standing on stacks of steel to work without fall protection when fall protection is not practical. Specifically, AISI said the following:

> OSHA requires employers to provide either guardrails or tie-off protection to workers who must perform their duties 48 inches or greater above the ground (1910.23 and 1910.66). These requirements are infeasible for operations that exist in steel and steel products companies where individuals need to stand on "stacks" of product that have a large surface area in order to rig bundles for crane lifts and similar activities. These rules also affect the loading of product onto truck trailers and railcars that are, with rare exception, over 48 inches above the ground. OSHA's list of "solutions" are to build guardrails around the product stacks, use magnet cranes, or provide safety lines around trailers and railcars, but these solutions are not feasible. Use of fixed guardrails around

truck trailers and railcars is not feasible and would, additionally, create its own serious safety hazard. The use of magnet cranes that do not require a rigger is also infeasible because magnet [sic] cannot connect to only a single bundle. Providing safety lines around the stacks, trailers and railcars is infeasible because customer orders necessitate bundles to be in varied stack heights, based on quantity ordered. Finally, because product placement for shipment requires traversing the trailers and railcars, it would require product to move through required safety lines. These rules should provide employers with some flexibility by stating that activities that are over 48 inches above the ground should use either guardrails or tie-off protection, "where practical." In situations where their use is not practical, the employer should be permitted to use an alternative practice and to provide appropriate training to the employee.

OSHA requests comment on PCI's recommended procedures and AISI's position. The Agency also refers readers to Issue #1 above which also pertains to providing fall protection for employees on vehicles and railcars.

Issue #3—Qualified Climber

In the 1990 proposal (55 FR 13366), OSHA first introduced the concept of a "qualified climber." A qualified climber was defined as "an employee who, by virtue of physical capabilities, training, work experience, and job assignment is authorized by the employer to routinely climb fixed ladders, step bolts or similar climbing devices attached to structures." OSHA proposed that rather than always providing conventional fall protection (cages, wells, ladder safety systems, or other fall protection) to employees climbing fixed ladders over 24 feet (7.3 m), the employer could allow qualified climbers to climb without fall protection provided certain criteria were met.

On March 1, 1991, OSHA granted a variance to Gannett Outdoor Companies (56 FR 8801) permitting it to use qualified climbers as defined in the 1990 NPRM for outdoor advertising (billboard) applications. On January 26, 1993, OSHA issued a compliance directive applying these conditions to all outdoor-billboard applications.

The criteria included that the ladder be climbed two or fewer times per year and that installing a ladder safety system, cage, or well would create a greater hazard. The premise of the proposal was that many fixed ladders in use at the time were not equipped with cages or wells as required by the existing standard. In addition, installing them would be extremely costly and the installation process itself might pose a greater hazard to workers than simply climbing the ladder without fall protection. Newer, anecdotal information available to OSHA indicates just the opposite—that most fixed ladders over 24 feet (7.3 m) in height are already equipped with a well, cage, or some other type of fall protection (ladder safety system or personal fall protection system). OSHA notes that newer fall protection systems have emerged that can be installed in one climb of a fixed ladder. Some ladders are even manufactured with a ladder safety system already installed as an integral part of the ladder. For these reasons OSHA is not proposing the use of qualified climbers in this rule, except in the outdoor advertising (billboard) industry. Permitting the exception for billboard applications would codify the aforementioned 1993 variance. However, considering the advances in fall protection since publication of the 1990 proposed rule, OSHA requests comment on the need for the qualified-climber provision for the outdoor advertising industry. Removing this proposed provision would result in requiring fall protection for this industry that is the same as on all other fixed ladders covered by subpart D; therefore, commenters are requested to also address the technological and economic feasibility of removing this proposed provision. Commenters should provide supporting rationale for all responses.

OSHA is not proposing to impose a duty to provide fall protection where an existing subpart D standard already requires the use of fall protection equipment. Thus, the proposed rule would not apply to electric power generation, transmission, or distribution work covered by § 1910.269(g)(2)(v), or to telecommunications work covered by § 1910.268(n)(7) or (n)(8). These two industry-specific standards generally permit employees to free climb to work locations on poles, towers, and similar structures without the use of fall protection equipment. These standards protect employees by requiring adequate training in climbing (§§ 1910.268(c) and 1910.269(a)(2)(i)) and, in the case of the electric power generation standard in § 1910.269, by ensuring that employees are proficient in safe climbing techniques (§ 1910.269(a)(2)(vii)). OSHA invites comment on whether §§ 1910.268(n)(7) and (n)(8) and 1910.269(g)(2)(v), which generally require fall protection only after the employee reaches the working position, adequately protect employees. In addition, the Agency requests information on the technological feasibility of requiring fall protection for employees climbing and changing position on electric power and telecommunications poles and structures, and the costs and benefits of complying with such a requirement.

Issue #4—Building Anchorages for Rope Descent Systems

Section 1910.27(b) of the proposal addresses rope descent systems and includes a provision (in proposed § 1910.27(b)(2)(iv)) requiring "sound" anchorages. OSHA believes that sound anchorage points are necessary to ensure that rope descent systems can be safely attached to the building for any type of suspended work, not just window cleaning. The ideal solution is for anchorages to be installed and maintained as part of the regular schedule for renovating and inspecting commercial buildings.

Existing subpart D does not address the installation and maintenance of anchorages on buildings or other structures. Under the proposed rule, separate anchorages are required for personal fall arrest systems and for rope descent systems. The requirements for anchorages for personal fall arrest systems are contained in proposed subpart I, § 1910.140. However, no specific requirements for anchorages used with rope descent systems are included in this subpart D proposal, other than to specify that they be "sound."

OSHA raised this issue in the 1990 proposal (55 FR 29224, 29227–28, July 18, 1990) and again in the 2003 Reopening Notice (68 FR 23534). In those documents, OSHA requested comment on whether it should add an installation and maintenance provision to subpart D for "all structures where it is reasonably foreseeable that employees will need anchorage points" to attach rope descent systems and other equipment. OSHA raised the issue after the International Window Cleaning Association (IWCA) and small window cleaning companies told OSHA that quite often there were no anchorage points on rooftops for attaching their lines. Since they did not own the building, they had no control over the presence or location of anchorage points. They urged OSHA to require building owners to install anchorages on rooftops or designate existing structural members that would be strong enough to serve as anchor points to attach scaffolds, control descent devices, and safety lines (Ex. OSHA–S041–2006–0666–0543; Ex. OSHA–S041–2006–0666–1252, pp. 311, 313, 330–31; Ex. OSHA–S041–2006–0666–1253, pp. 483–84, 503, 543–44, 565–66, 596–97, 629–30).

OSHA also noted that the Building Owners and Managers Association International (BOMA) objected to

requiring building owners to provide anchor points, stating that window cleaners were generally able to find supports on which to tie off (Ex. OSHA–S041–2006–0666–1255, p. 1443), but agreed that new buildings completed two to five years after the effective date of the final rule should be equipped with anchor points (Ex. OSHA–S041–2006–0666–1212).

The ANSI standard for Window Cleaning Safety, ANSI I–14.1–2001 (Ex. OSHA–S029–2006–0662–0014), in section 3.9 prescribes criteria for anchorages used for rope descent systems and independent life lines, specifying, "Building owners and window cleaning contractors shall not allow suspended work to be performed unless it has been determined that the building has provided, identified and certified anchorages * * *." OSHA notes that IWCA and BOMA participated on the ANSI committee that developed the national consensus standard addressing safety in window cleaning operations. According to the ANSI standard, anchorages must be capable of sustaining a 5,000 pound (2268 kg) load, or a minimum 4-to-1 safety factor, whichever is greater, in any direction that the load may be applied, among other requirements. It should be noted that ANSI/IWCA I–14.1 contained a recommendation in Appendix A that the requirements be implemented within 5 years of its publication on October 25, 2001. OSHA requests comment on whether it should include the language of the ANSI/IWCA standard in the final rule or should it require some other criteria for building anchorages?

For example, under § 1910.66, Powered platforms for building maintenance, OSHA requires building owners to provide an employer with a certification of inspection, testing, and maintenance of anchorages for powered platforms used in building maintenance. OSHA requests comments on whether it should require building owners to provide employers with the same information required by § 1910.66.

OSHA is aware that some window cleaning companies are using the powered platform certified anchorages for rope descent systems. If OSHA were to adopt the same requirement, those building's owners would have no additional obligation to comply with the language under consideration.

OSHA believes that many building owners already meet the § 1910.66 requirements or the provisions of ANSI/IWCA I–14.1. For instance, it is the Agency's understanding that the General Services Administration (GSA) updated its policy to require building anchors to be installed during construction or extensive remodeling of government buildings.

Issue #5—Technological Advances in Fall Protection and Fall Arrest

The Agency is aware of a newer dual-mode operation self-retracting lanyard that, in the event of a fall, arrests the fall and then automatically lowers the worker at a controlled, slow rate of speed to the ground or to the next lower level. These devices show promise, for example, in rescuing some workers following a fall. OSHA requests comment regarding the current use and effectiveness of these devices, appropriate and inappropriate conditions of use, as well as relevant costs and benefits.

In addition, OSHA requests information on other new fall protection and fall arrest equipment that is not mentioned in this proposal. Please include a detailed explanation of the equipment, sources of supply, costs and benefits, applications, and conditions of use.

IV. Summary and Explanation of the Proposed Rule

A. Format of Proposed Changes to Subparts D and I

OSHA's proposed revisions to subpart D include a reorganization of the existing rule to make the rule clearer, necessitating reformatting the entire subpart. OSHA's proposed format changes are set forth in the following redesignation table:

REDESIGNATION TABLE

Existing	Proposed rule
§ 1910.21 Definitions.	§ 1910.21 Scope, application, and definitions.
§ 1910.22 General requirements.	§ 1910.22 General requirements.
§ 1910.23 Guarding floor and wall openings and holes.	§ 1910.23 Ladders.
§ 1910.24 Fixed industrial stairs.	§ 1910.24 Step bolts and manhole steps.
§ 1910.25 Portable wood ladders.	§ 1910.25 Stairways.
§ 1910.26 Portable metal ladders.	§ 1910.26 Dockboards (bridge plates).
§ 1910.27 Fixed ladders.	§ 1910.27 Scaffolds (including rope descent systems).
§ 1910.28 Safety requirements for scaffolding.	§ 1910.28 Duty to have fall protection.
§ 1910.29 Manually propelled mobile ladder stands and scaffolds (towers).	§ 1910.29 Fall protection systems criteria and practices.
§ 1910.30 Other working surfaces.	§ 1910.30 Training requirements.

The Agency seeks comment regarding this reorganization of subpart D, and rationale, to support any suggested modification(s). OSHA's proposed revisions to subpart I includes the addition of a new § 1910.140 and appendices C and D.

B. Proposed Changes to Subpart D

As mentioned earlier in the Summary statement of this notice, OSHA is publishing proposed rules for subpart D, Walking-Working Surfaces and subpart I, Personal Protective Equipment for Fall Protection concurrently. Proposed subpart D establishes requirements for general industry walking-working surfaces and prescribes the use of fall protection systems (including *personal* fall protection systems) to protect employees from falls. Proposed subpart I contains performance criteria for *personal* fall protection systems only. OSHA notes that wherever subpart D makes specific reference to the requirements in subpart I, the reference is to the pertinent provisions in the proposed rule of subpart I (which accompanies this proposed rule), and not to the existing subpart I requirements, unless specifically stated.

The following discussion explains the purpose of the proposed rule, and explains the differences between the proposed rule and existing standards. The rulemaking history is quite lengthy; to date two proposals have been issued, one in 1973 and one in 1990. Since the earlier proposals, technology has advanced greatly and many of the requirements proposed by OSHA in the two earlier rulemakings are no longer

appropriate. Similarly, OSHA believes that many of the comments received on those proposals are no longer relevant. Therefore, OSHA will only discuss comments from the 1990 proposal that are pertinent to today's proposal. However, all the comments are available for review in Docket No. S–041, located in the OSHA Docket Office.

References in parentheses are to exhibits in the current rulemaking record and are available in the OSHA Docket Office under Docket No. OSHA–2007–0072. Where references are made to the earlier proposal (1990), and the reopening of that record (2003), both the exhibit and docket number will be noted.

Throughout this proposal, where possible, performance-oriented language is used. Any employer who experiences difficulty applying these performance-oriented standards may consult the applicable national consensus standards for additional information.

Section 1910.21 Scope, Application, and Definitions

Paragraph (a) Scope and Application

Proposed § 1910.21 sets the scope and application for subpart D and also lists and defines the major terms used. Existing subpart D does not contain a scope and application section for the entire subpart, but it does contain several separate "application" requirements in various sections of subpart D. For example, each of the following existing sections contains "application" statements: the introductory text to § 1910.22 General requirements; paragraph (a) of § 1910.24 Fixed industrial stairs; paragraph (a) of § 1910.25 Portable wood ladders; paragraph (e)(3) of § 1910.27, Fixed ladders; and paragraph (a)(1) to § 1910.29 Manually propelled mobile ladder stands and scaffolds (towers). None of the other sections in existing subpart D address the scope or application.

Proposed paragraph (a) provides to the public a clear understanding of the rule and is consistent with the Agency's interpretation and enforcement of subpart D since its inception. That is, as a whole, existing subpart D applies to all general industry workplaces. However, as proposed, there are some sections within subpart D that do not apply to certain operations or activities. These exceptions are addressed in individual sections of this subpart.

An exclusion contained in a specific section applies to that section only; all other sections in subpart D do apply. For example, if an employee is working on a ladder on an entertainment stage, the applicable requirements of proposed § 1910.23, Ladders, apply, as would § 1910.22, General requirements, even though § 1910.28, Duty to have fall protection, does not apply to exposed perimeters of entertainment stages.

Paragraph (b) Definitions

Proposed paragraph (b) of § 1910.21 lists and defines all major terms used in the proposed standard. The existing rule defines 125 terms and, in some cases, the same term is defined differently several times due to the context in which it is used. For example, in existing § 1910.21(a)(4) the term "platform" is defined as "A working space for persons, elevated above the surrounding floor or ground; such as a balcony or platform for the operation of machinery and equipment." In existing § 1910.21(b)(4), "platform" is defined as "an extended step or landing breaking a continuous run of stairs."

Another example of the same term being defined differently in the existing rule is the term "handrail." In existing § 1910.21(a)(3), the term is defined as "A single bar or pipe supported on brackets from a wall or partition, as on a stairway or ramp, to furnish persons with a handhold in case of tripping," whereas § 1910.21(b)(1) and (g)(8) define "handrail" as "a rail connected to a ladder stand running parallel to the slope and/or top step."

Likewise, the term "toeboard" is defined in § 1910.21(a)(9) as "a vertical barrier at floor level erected along exposed edges of a floor opening, wall opening, platform, runway, or ramp to prevent falls of materials," whereas in § 1910.21(g)(16) the term is defined as "a barrier at platform level erected along the exposed sides and ends of a scaffold platform to prevent falls of materials."

In today's proposal, all major terms are listed and defined in paragraph (b), and the term will have the same meaning in all sections of proposed subpart D. Many of the definitions are the same as those in the existing standard, although some have been reworded for uniformity or clarity.

OSHA seeks to improve subpart D by making it easier to understand, as well as consistent with other Agency rules regulating the same topics. To that end, where terms used in subpart D have been defined in other general industry, construction, or maritime standards, the Agency has, where possible, used the same definition. OSHA believes such consistency will lead to a better understanding of the rules, and to greater compliance, resulting in increased employee safety. The following terms are defined in the proposed rule: alternating tread-type stair; authorized; cage; carrier; combination ladder; designated area; dockboard (bridge plate); equivalent; extension ladder; failure; fall hazard; fall protection; fixed ladder; grab bars; guardrail system; handrail; hoist area; hole; individual rung ladder; ladder; ladder safety system; lower level; manhole steps; maximum intended load (designed working load); mobile; mobile ladder stand (ladder stand); mobile ladder stand platform; open riser; opening; platform; portable ladder; qualified; qualified climber; ramp; riser; rope descent system; rung, step, or cleat; runway; safety factor; scaffold; ship stairs (ship ladders); side-step ladder; single-point adjustable suspension scaffold; spiral stairway; stair rail system; standard stairs; stepladder; step-bolt (pole step); stepstool; through ladder; tieback; toeboard; tread; unprotected sides and edges; walking-working surface; and well.

Some terms defined in the existing standard are not defined in the proposal because they are: (1) not used in the proposal, or (2) do not need to be defined because their meaning is clear without further explanation. An example of a term that does not need definition is the term "working level." This term does not need to be defined because it is obvious that the level at which the employee is working is the working level.

Many of the existing terms and definitions pertain to scaffolds. Because OSHA is proposing that scaffolds used in general industry comply with the construction industry scaffold requirements of subpart L of part 1926 (§§ 1926.450 through 1926.454), there is no need to define scaffold terms in this general industry proposal. For example, the term "check" refers to the lengthwise separation of wood in scaffold planking. Because subpart D is referring to § 1926 for scaffolding requirements, there is no need for this definition in § 1910.21(b).

Although many definitions remain unchanged, the following proposed terms have been added or revised from the existing definitions:

Alternating tread-type stair. This term means a series of treads usually attached to a center support in an alternating manner so that a user of the stair normally does not have both feet on the same level at any time whether ascending, descending, or standing. The proposed definition is consistent with ANSI A1264.1–1995(R2002), Safety Requirements for Workplace Floor and Wall Openings, Stairs and Railing Systems.

Authorized. This term describes an employee who is approved or assigned by the employer to perform a specific

type of duty or an employee who is permitted by the employer to be at a specific location.

Cage. This term means a barrier mounted on the side rails of a fixed ladder or fastened to the structure behind the fixed ladder designed to encircle the climbing space of the ladder to safeguard the employee while climbing the ladder. A cage may also be called a "cage guard" or "basket guard." The proposed definition is essentially the same as the definition in existing paragraph (e)(11), but was revised for clarity. This proposed definition is also consistent with ANSI A14.3–2002, American National Standard for Ladders—Fixed—Safety Requirements.

Combination ladder. This term means a portable ladder that can be used as a stepladder, single extension ladder, trestle ladder, or a stairwell ladder. Its components may be used as a single ladder. This definition is consistent with ANSI A14.1–2000, American National Standard for Safety Requirements for Portable Wood Ladders; A14.2–2000, American National Standard for Safety Requirements for Portable Metal Ladders; and A14.5–2000, American National Standard for Safety Requirements for Portable Reinforced Plastic Ladders.

Designated area. This term means a distinct portion of a walking-working surface delineated by a perimeter warning line in which temporary work may be performed by employees without additional fall protection. The concept of a designated area is patterned after controlled access zones and warning line systems used in OSHA's construction standards at subpart M of part 1926.

Dockboard (bridge plate). This term means a portable or fixed device for spanning the gap or compensating for the difference in level between loading platforms and carriers.

Equivalent. This term means alternate designs, materials, or methods that the employer can demonstrate will provide an equal or greater degree of safety for employees compared to the design, material, or method specified in this subpart. The existing definition in paragraph (g)(6) has been revised for consistency with OSHA's construction standards at subpart M of part 1926. To be deemed "equivalent," the employer would have the burden of demonstrating that the alternate designs, materials, or methods will provide an equal or greater degree of safety for employees than the design, material, or method specified in this subpart.

Extension ladder. This term means a non-self-supporting portable ladder, adjustable in length. This proposed definition is consistent with ANSI A14.1–2000, ANSI A14.2–2000, and ANSI A14.5–2000, and removes the overly specific measurement criteria and is clearer and more concise than the definition in existing paragraphs (c)(4) and (d)(4) of § 1910.21.

Failure. This term means a load refusal, breakage, or separation of component parts. Load refusal is the point where the ultimate strength is exceeded. This term is consistent with OSHA's construction fall protection standard at § 1926.500(b), Definitions.

Fall hazard. This term means any condition on a walking-working surface that exposes an employee to injury from a fall on the same level or to a lower level.

Fall protection. This term means any equipment, device, or system that prevents an employee from experiencing a fall from elevation or that mitigates the effect of such a fall. Examples of fall protection include, but are not limited to, guardrail systems, ladder safety systems, and personal fall arrest systems.

Fixed ladder. This term means a ladder, including an individual rung ladder, which is permanently attached to a structure, building, or equipment. It does not include ship stairs or manhole steps. This definition is essentially the same as existing paragraph (e)(2) of § 1910.21, and clarifies that the term includes individual rung ladders but not ship stairs or manhole steps. The proposed definition is consistent with ANSI A14.3–2002.

Grab bars. This term means individual handholds placed adjacent to or as an extension of ladder side rails for the purpose of providing access beyond the limits of a ladder.

Guardrail system. This term means a barrier erected to prevent employees from falling to lower levels. Existing subpart D uses the terms "guardrail" and "standard railing." Both terms are defined as a barrier to prevent falls to lower levels. OSHA proposes to use one term—guardrail system to describe this type of barrier. The proposed definition is consistent with both subparts L—Scaffolds, and M—Fall Protection of the construction industry standards.

Handrail. This term means a rail used to provide employees with a handhold for support. There are three definitions for the term "handrail" in existing subpart D. OSHA proposes to define the term to be consistent with Subpart X—Stairways and Ladders of the construction industry standards.

Hoist area. This term means any elevated access opening to a walking-working surface where hoisted equipment or materials are loaded or received. The existing rule does not use the term "hoist area," whereas the proposed rule does.

Hole. This term means a gap or void 2 inches (5 cm) or more in its least dimension, in a floor, roof, or other walking-working surface. The existing standard defines holes and openings separately; however, the treatment of each is essentially the same. The existing rule defines a floor *hole* as an opening less than 12 inches (30 cm) but more than 1 inch (3 cm) in its least dimension through which materials may fall, and defines a floor *opening* as a hole measuring 12 inches (30 cm) or more in its least dimension through which persons may fall. To bring clarity to the terms and consistency with its fall protection rules in construction industry standards, OSHA is proposing to use the term "hole" to describe all voids and gaps (holes and openings) in floors, roofs, and other walking-working surfaces. Likewise, OSHA is proposing to use the term "opening" to describe voids and gaps in vertical surfaces such as walls and partitions.

Individual rung ladder. This term means a ladder consisting of rungs individually attached to a structure, building, or piece of equipment. It does not include manhole steps. The proposed definition has been editorially revised from the existing definition in paragraph (e)(3) to clarify its meaning, and to make it clear that manhole steps are not considered individual rung ladders.

Ladder. This term means a device with rungs, steps, or cleats typically used to gain access to a different elevation. This proposed definition for the term is consistent with the definitions used in the ANSI A14 consensus standards that are applicable to various types of ladders. Additionally, the proposed language is more concise than the existing definitions of the term.

Ladder safety system. This term means a device, other than a cage or well, designed to eliminate or reduce the possibility of falls from ladders. A ladder safety system usually consists of a carrier (the track of flexible cable or rigid rail), safety sleeve (moving component which travels on the carrier), lanyard, connectors, and body belt or harness. The term "ladder safety system" is not used or defined in existing OSHA standards; however, the synonymous term "ladder safety device" is defined in existing construction industry standards for fixed ladders at subpart X. The proposed definition is consistent with the definition in the

national consensus standard applicable to fixed ladders, ANSI A14.3–2002.

Lower level. This term means an area to which an employee could fall. Such areas include ground levels, floors, roofs, ramps, runways, excavations, pits, tanks, materials, water, equipment, and similar surfaces. This definition is consistent with that located in the construction industry standards in subpart M.

Manhole steps. This term means steps individually attached or set into the walls of a manhole structure.

Maximum intended load. This term (also referred to as the "designed working load") means the total load of all employees, equipment, tools, materials, transmitted loads, and other loads reasonably anticipated to be applied to a walking-working surface. It is based on and consistent with the definition in the construction industry standards in subpart M.

Mobile. This term means manually propelled and/or movable. This is a clarification of existing paragraph (g)(12) which simply defines the term as "manually propelled." The proposed definition is consistent with ANSI A14.7–2006, Safety Requirements for Mobile Ladder Stands and Mobile Ladder Stand Platforms, and facilitates the definition of the next two terms. OSHA requests comment on whether the term "mobile" is so common that defining it in the final rule is unnecessary.

Mobile ladder stand. This term (also known as "ladder stand") means a mobile, fixed-size, self-supporting ladder consisting of wide flat treads in the form of steps accessing a top step. The assembly may include handrails and is intended for use by one employee. This definition is consistent with ANSI A14.7–2006, American National Standard for Mobile Ladder Stands and Mobile Ladder Stand Platforms. The definition for ladder stand in existing paragraph (g)(9) of § 1910.21 has been incorporated into the proposed definition of "mobile ladder stand."

Mobile ladder stand platform. This term means a mobile fixed-height, self-supporting unit having one or more standing levels, provided with means of access to or egress from the platform or platforms. This definition is consistent with ANSI A14.7–2006, American National Standard for Mobile Ladder Stands and Mobile Ladder Stand Platforms.

Opening. This term means a gap or void 30 inches (76 cm) or more high and 18 inches (46 cm) or more wide in any wall or partition through which employees can fall to a lower level. This definition is consistent with ANSI A10.18–1996, Safety Requirements for Temporary Floor Holes, Wall Openings, Stairways and Other Unprotected Edges—American National Standard for Construction and Demolition Operations, and the construction industry standard at § 1926.500, and would replace existing paragraphs (a)(2) and (a)(11) of § 1910.21 that defined "floor opening" and "wall opening" (*see* above discussion under "hole"). This is another area where the Agency would harmonize construction and general industry regulations to make them more understandable, thereby increasing compliance and employee safety.

Platform. This term means a walking-working surface elevated above the surrounding area. This definition is based on and consistent with the construction industry standard at § 1926.450(b), and would replace existing definitions in paragraphs (a)(4) and (b)(4) of § 1910.21.

Portable ladder. This term means a ladder that can readily be moved or carried and usually consists of side rails joined at intervals by steps, rungs, cleats, or rear braces. The definition is identical to ANSI A14.1–2000, American National Standard for Safety Requirements for Portable Wood Ladders, ANSI A14.2–2000, American National Standard for Ladders—Portable Metal—Safety Requirements, and ANSI A14.5–2000, American National Standard for Safety Requirements for Portable Reinforced Plastic Ladders.

Qualified. This term describes a person who, by possession of a recognized degree, certificate, or professional standing, *or* who by extensive knowledge, training, and experience has successfully demonstrated the ability to solve or resolve problems relating to the subject matter, the work, or the project. This definition is consistent with proposed subpart I, the shipyard employment standards, and the construction industry standard in § 1926.32.

Qualified climber. This term means an employee engaged in outdoor advertising work who, by virtue of physical capabilities, training, work experience and job assignment, is authorized by the employer to climb fixed ladders without using fall protection.

Rope descent system. This term means a suspension device that supports one employee in a chair (seat board) and allows the user to descend in a controlled manner and to stop at any time at a desired level of descent. A rope descent system is a variation of the single-point adjustable suspension scaffold. It is also known as a controlled descent device, controlled descent equipment, or controlled descent apparatus. Existing subpart D does not regulate rope decent systems, thus there is no existing definition for the term. The proposal, on the other hand, contains new requirements for rope decent systems since these are widely used in general industry. The proposed definition is based on the national consensus standard ANSI/IWCA I–14.1–2007, Window Cleaning Safety.

Rung, step, or cleat. This term means, when used on a ladder, a cross-piece on which a person may step to ascend or descend. The proposed definition combines the existing definitions for rungs, steps, and cleats.

Runway. This term means a passageway for employees, elevated above the surrounding floor or ground level, such as a catwalk, a foot walk along shafting, or a walkway between buildings. The proposed definition is consistent with the existing definition, and has been revised for clarity.

Safety factor. This term means the ratio of the design load and the ultimate strength of the material.

Scaffold. This term means any temporary elevated or suspended platform, and its supporting structure, including points of anchorage, used to support employees or materials or both. The term "scaffold" would not include crane or derrick suspended personnel platforms. This term is consistent with § 1926.450(b), and replaces the definitions in existing paragraphs (f)(27) and (g)(15) of § 1910.21.

Ship stairs (ship ladders). This term means a stairway that is equipped with treads and stair rails that has a slope between 50 and 70 degrees from the horizontal and has open risers. Ship stairs are also called "ship ladders."

Spiral stairway. This term means a stairway having a helical (spiral) structure attached to a supporting pole.

Stair rail or stair rail system. This term means a vertical barrier (such as rails, decorative panels, and mesh) erected along open sides of stairways to prevent employees from falling to lower levels. The top surface of a stair rail system may also serve as a handrail. The proposed definition would replace existing definitions in paragraphs (a)(8), (b)(5), and (e)(5) of § 1910.21.

Standard stairs. This term means a permanently installed stairway. Ship stairs, spiral stairs, and alternating tread-type stairs are not standard stairs.

Stepladder. This term means a self-supporting portable ladder, non-adjustable in length, with flat steps and a hinged back. The definition would replace those found in existing paragraphs (c)(2) and (d)(2) of § 1910.21

that also contain specifications for length measurements.

Step bolt (pole step). This term means a bolt or rung attached at intervals along a structural member and used for foot placement during climbing or standing. Step bolts are also called "pole steps." This definition is consistent with the one found in § 1910.269.

Stepstool. This term means a self-supporting, foldable, portable ladder, nonadjustable in length, 32 inches (81 cm) or less in overall size, with flat steps and without a pail shelf, designed so that the ladder top cap, as well as all steps, can be climbed on. The side rails may continue above the top cap. This definition is consistent with ANSI A14.2–2000.

Through ladder. This term means a type of fixed ladder designed to allow a person to get off at the top by stepping through the ladder to reach a landing. The existing term found in § 1910.21(e)(15) is revised for clarity.

Tieback. This term means an attachment from an anchorage (e.g., structural member) to a supporting device. This definition is consistent with ANSI A10.8–2001, American National Standard for Construction and Demolition Operations—Safety Requirements for Scaffolding.

Toeboard. This term means a low protective barrier that will prevent the fall of materials and equipment to lower levels and provide protection from falls for employees. This definition is consistent with OSHA's construction industry standards at § 1926.500(b), and is consistent with, and would replace, the existing definition in § 1910.21(a)(9), (f)(31), and (g)(16).

Unprotected sides and edges. This term means any side or edge of a walking-working surface (except at entrances to points of access) where there is no wall or guardrail system at least 39 inches (99 cm) high. This definition is consistent with § 1926.500(b) and replaces the phrase "open-sided floors, platforms, and runways" used in existing § 1910.23(c)(1).

Walking-working surface. This term means any surface, horizontal or vertical, on or through which an employee walks, works, or gains access to a workplace location. Walking-working surfaces include, but are not limited to, floors, stairs, steps, roofs, ladders, ramps, runways, aisles, and step bolts.

Section 1910.22 General Requirements

OSHA proposes to revise the existing requirements contained in § 1910.22, and introduce new requirements addressing general hazards associated with all walking-working surfaces. The existing requirements in § 1910.22 address the scope of subpart D—housekeeping, aisles and passageways, covers and guardrails, and floor loading protection. Where language of the existing standards appropriately addresses surface hazards, OSHA proposes to use that language with editorial corrections as necessary. The revised performance-oriented provisions are designed to eliminate detailed specifications and facilitate compliance.

Proposed paragraph (a)(1) requires that all places of employment, passageways, storerooms, and service rooms be kept clean and orderly, and in a sanitary condition. Proposed paragraph (a)(2) requires that floors of workrooms be maintained in a clean and, so far as possible, dry condition. It also requires that, where wet processes are used, drainage be maintained, and false floors, platforms, mats, or other dry standing places be provided when practicable. OSHA does not expect all surfaces to be maintained in a pristine manner; however, surfaces must be maintained in a condition that will prevent slips, trips, falls, and other hazards. These two provisions are identical to existing § 1910.22(a)(1) and (a)(2).

Historically, OSHA interpreted these provisions as applying to combustible-dust accumulations associated with fire and explosion hazards. Regarding this interpretation, one court stated that "the housekeeping standard is not limited to tripping and falling hazards, but may be applied to [a] significant accumulation of combustible dust." *Con Agra, Inc.* v. *Occupational Safety and Health Review Com'n,* 672 F.2d 699, 702 (8th Cir. 1982), citing *Bunge Corp.* v. *Secretary of Labor,* 638 F.2d 831, 834 (5th Cir. 1981), which reached the same conclusion. (*See,* also, *Farmer's Co-op, 1982* WL 2222661 (O.S.H.R.C.); *CTA Acoustics (KY 2003),* CSB Report No. 2003–09–I–KY (February 2005); *Hayes Lemmerz Int'l (Indiana 2003),* CSB Report No. 2004–01–I–IN (September 2005).)

As these cases show, § 1910.22(a) serves as one of OSHA's most important enforcement tools for preventing combustible-dust accumulations, and it continues to be an important element of OSHA's enforcement strategy for this hazard; *see,* e.g., "Combustible Dust in Industry: Preventing and Mitigating the Effects of Fire and Explosion," OSHA Safety and Health Information Bulletin (SHIB) 07–31–2005, (2005, July 31), available at *http://www.osha.gov/dts/shib/shib073105.html*; "Hazard Alert: Combustible Dust Explosions," OSHA Fact Sheet (2008, March), available at *http://www.osha.gov/OshDoc/data_General_Facts/OSHAcombustibledust.pdf;* and OSHA Compliance Directive CPL–03–00–008, "Combustible Dust National Emphasis Program," (March 11, 2008), (replacing CPL 03–00–006, "Combustible Dust National Emphasis Program," October 18, 2007) available at *http://www.osha.gov/pls/oshaweb/owadisp.show_document?p_table=DIRECTIVES&p_id=3830.*

The Agency seeks comment on whether it should include an explicit reference to combustible dust or other hazardous material in the regulatory language of the final rule. This language would merely clarify OSHA's long-held interpretation: That § 1910.22(a) is not limited to the hazards of slips, trips, and falls, but also addresses any hazard that can be created when floors and work areas are not maintained in an orderly, clean, dry, and sanitary condition. Therefore, OSHA is seeking comment on the following questions: (1) Should OSHA reference combustible dust in either paragraph (a)(1) or (a)(2), or both; and (2) should OSHA reference other types of dust or other materials? Please explain your answers.

On December 27, 2007, in the notice of proposed rulemaking for General Working Conditions in Shipyard Employment (FR 72:72451), OSHA used the following language in proposed § 1915.81(d):

> The employer shall ensure that the floor or deck of every work area shall be maintained, so far as practicable, in a dry condition. Where wet processes are used, drainage shall be maintained and the employer shall provide false floors, platforms, mats or other dry standing places. Where this is not practicable, the employer shall provide appropriate waterproof footgear, such as rubber overboots, in accordance with Sec. 1915.152.

The Agency requests comment on whether it would be appropriate to use similar language in place of that proposed in paragraph 1910.22(a)(2). Furthermore, OSHA requests comment on the costs and benefits of this alternative.

In proposed paragraph (a)(3), OSHA requires employers to ensure that all surfaces be designed, constructed, and maintained free of recognized hazards that can result in death or serious injury to employees. This requirement's performance language replaces the more specific language in existing paragraph (a)(3) of § 1910.22.

Proposed paragraph (b) sets requirements for the application of loads. Proposed paragraph (b)(1) requires employers to ensure that all walking-working surfaces are designed, constructed, and maintained to support

their maximum intended load. These surfaces include, for example, platforms used with fixed ladders, and dockboards. Proposed paragraph (b)(2) would prohibit exceeding the maximum intended load. Proposed paragraphs (b)(1) and (b)(2) would replace existing paragraphs (d)(1) and (d)(2) of § 1910.22, which addressed floor and roof load limits. The intent of the proposed provisions is to ensure that walking-working surfaces are strong enough to support loads placed on them to protect employees from injury. The proposed language imposes essentially the same burden as the existing rule, but has been reworded for clarity and ease of understanding.

Additionally, the proposed provisions do not continue the existing requirement that employers post plates indicating load limits of the building/structure. This information was posted to indicate how much weight could safely be loaded onto a walking-working surface. Currently, this information is available from building plans, and usage and expected loads are taken into consideration when surfaces are designed. The proposed requirement puts the burden on the employer to ensure walking-working surfaces are strong enough to support any loads placed on them. OSHA believes the proposed language provides adequate protection to employees without the added burden on employers to gather and post information.

Proposed paragraph (c) requires employers to provide, and ensure use of, a safe means of access and egress from one level to another. This provision is patterned after a similar provision in the construction industry standards. The proposed language clearly expresses the Agency's intent—to ensure that employees are provided with and use appropriate, suitable means (such as stairways, ladders, or ramps) to go from one walking-working surface to another.

Proposed paragraph (d) is new and addresses the maintenance and repair of walking-working surfaces in general industry. Proposed paragraph (d)(1) requires the employer to ensure through regular and periodic inspection and maintenance that walking-working surfaces are in a safe condition for employee use. Proposed paragraph (d)(2) requires the employer to ensure that all hazardous conditions are corrected, repaired, or guarded to prevent employee use until repairs are made. Proposed paragraph (d)(3) requires that where hazardous conditions may affect the structural integrity of the walking-working surface, a qualified person must perform or supervise the maintenance or repair of that surface.

The intent of proposed paragraph (d) is to ensure that the employer, or the employer's designee, monitors walking-working surfaces to identify hazards that may lead to injury or death and to address those hazards promptly. A qualified person must perform or supervise the repair where hazards are of such a nature that the structural integrity of the walking-working surface may be affected. While the provision does not require the employer to develop an inspection schedule, or keep records of inspections, it does require the employer to ensure that inspections are conducted frequently enough so that hazards are corrected in a timely manner.

OSHA notes that the existing requirements in § 1910.22(b) and (c) are not retained in proposed subpart D because they duplicate provisions in § 1910.176, or the hazards are addressed elsewhere in the proposed rule, such as in the fall protection section.

Section 1910.23 Ladders

Proposed § 1910.23 is a revision and consolidation of existing ladder requirements in §§ 1910.25, 1910.26, and 1910.27, that regulate portable wooden, portable metal, and fixed ladders, respectively. Many of these requirements are retained in the proposed rule as OSHA believes they provide a reasonable and appropriate level of safety. Some requirements are revised for reasons of clarity, consistency, or to improve safety. Requirements common to all types of ladders are located in proposed paragraph (b), General requirements. Requirements specific to a particular type of ladder are located in proposed paragraphs (c), Portable ladders, or (d), Fixed ladders. Proposed paragraph (e) regulates mobile ladder stands and mobile ladder stand platforms. The proposed requirements have been updated and rewritten to be consistent with OSHA's construction industry ladder standard and the national consensus standards, *i.e.,* the ANSI A14 series for ladders.

Throughout this proposal, OSHA uses performance language whenever appropriate. However, in this section, a number of specifications are proposed with regard to clearances and rung widths for ladders. OSHA believes the specifications in this section, which are based upon human factors engineering (Ex. OSHA–S041–2006–0666–0004), are necessary and reflect the requirements of the ANSI A14 series for ladders.

Paragraph (a) Application

Proposed paragraph (a) states that § 1910.23 covers all ladders used in general industry, except ladders that are designed into (an integral part of) a machine or piece of equipment and ladders that are used only for firefighting or rescue operations. OSHA recognizes that it would not be reasonable or practicable to write standards for ladders designed into a part of a machine or piece of equipment because of variable design restrictions such as limited space and unlimited equipment configurations. Therefore, OSHA is exempting such equipment from specific ladder requirements. However, OSHA reminds employers that any surface on which employees walk or work would still have to meet the general requirements of proposed § 1910.22.

OSHA is also proposing to exempt ladders used in firefighting or rescue operations because such ladders are used only in emergency situations. The Agency notes that the primary concern expressed in the design of some of those ladders, such as single-rail ladders, is for fast placement and access. By contrast, this proposed paragraph focuses on the need to protect employees who use ladders routinely, in non-emergency situations. Therefore, given the circumstance in which firefighting and rescue operations are conducted, OSHA believes that it would be inappropriate to regulate firefighting and rescue ladders under proposed § 1910.23. When employees are members of a company fire brigade they must be trained as required by § 1910.156 in the use of such ladders.

Paragraph (b) General Requirements for All Ladders

As noted above, OSHA is consolidating some of the existing requirements for portable and fixed ladders. Requirements that apply in general to all types of ladders are included in paragraph (b), reducing redundancy and enhancing consistency of ladder requirements.

Proposed paragraph (b)(1) requires ladder rungs and steps to be parallel, level, and uniformly spaced when the ladder is in position for use. The proposed provision is consistent with and based upon existing § 1910.25(c)(2)(i)(*b*) for portable wood stepladders and existing § 1910.27(b)(1)(ii) for fixed ladders. The proposed language is consistent with the construction industry standard at § 1926.1053(a)(2).

Proposed paragraphs (b)(2) and (b)(3) provide spacing requirements for rungs,

cleats, and steps. Spacing is measured between the center lines of the rungs, cleats, and steps.

Proposed paragraph (b)(2) applies to all ladders except ladders in elevator shafts and telecommunication towers. Proposed paragraph (b)(2) permits flexibility in rung, step, and cleat spacing, as long as the rungs are parallel, level, and uniformly spaced, as required in the preceding paragraph. The proposed paragraph is a revision of requirements in existing § 1910.26(a)(1)(iii) which requires rungs to be spaced 12 inches (30 cm) apart, and existing paragraphs § 1910.25(c)(2)(i)(*b*) and § 1910.27(b)(1)(ii), which require rungs to be spaced not more than 12 inches (30 cm) apart. The proposed provision, which permits spacing of not less than 10 nor more than 14 inches apart, is consistent with the construction industry standard at § 1926.1053(a)(3)(i). It will not require any change to ladders that are already in compliance with the existing standard.

An exception to the spacing requirement in proposed paragraph (b)(2) of this section provides that rungs and steps on ladders in elevator shafts must be spaced no less than 6 inches (15 cm) apart, nor more than 16.5 inches (42 cm) apart, as measured along the ladder siderails. Another exemption is provided for fixed ladders on telecommunication towers which sets rung or step spacing at a maximum of 18 inches (46 cm). These exceptions are necessary due to the space restrictions in these areas. The latter part of the provision is consistent with the existing requirements for rungs and steps in § 1910.268(h)(2).

Proposed paragraph (b)(3) requires rungs, cleats, and steps of stepstools to be spaced between 8 inches (20 cm) and 12 inches (30 cm) apart, as measured between center lines of the rungs, cleats, or steps. There is no existing requirement regulating spacing on stepstools. OSHA is proposing this requirement because it believes that stepstools are routinely used in general industry and they should not be treated as portable ladders. This provision is consistent with the construction industry standard at § 1926.1053(a)(3)(ii) and is based on the national consensus standards ANSI A14.1–2000 and ANSI A14.2–2000. OSHA believes that virtually all stepstools currently in use already meet the proposed requirements.

Proposed paragraph (b)(4) requires ladder rungs and steps to have a minimum clear width of 11.5 inches (29 cm) for portable ladders and 16 inches (41 cm) for individual rung and fixed ladders. The proposal consolidates existing requirements in § 1910.25(c)(2)(i)(*c*), § 1910.26(a)(2)(i), and § 1910.27(b)(1)(iii). The proposed revision is consistent with both the construction industry standard at § 1926.1053(a)(4)(i) and (a)(4)(ii) and the national consensus standards in the ANSI A14 series for ladders. A note to proposed paragraph (b)(4) explains how to measure the width when a ladder safety system is used on a fixed ladder. An exception to the provision is provided in (b)(4)(i) for narrow rungs that are not designed to be stepped on, such as those on the top end of fruit pickers' ladders.

Proposed paragraph (b)(4)(ii) provides an exception for manhole entry ladders that are supported by manhole openings, and requires that they have rungs or steps with a clear width of at least 9 inches (23 cm). The width would increase the available climbing space for employees to pass through the manhole opening.

A final exception is provided in proposed paragraph (b)(4)(iii), which permits rolling ladders used in the telecommunication industry to have a minimum clear step or rung width of 8 inches (20 cm). This provision has been moved, without change, from § 1910.268(h)(5).

Proposed paragraph (b)(5) prohibits wooden ladders from being coated or covered with any material that may obscure structural defects. For the purposes of this paragraph, OSHA does not consider manufacturer-applied warning and informational labels to be coverings that obscure structural defects. This requirement is consistent with the construction industry standard at § 1926.1053(a)(12) and national consensus standard, ANSI A14.1–2000.

Proposed paragraph (b)(6) requires that metal ladders be protected against corrosion. For example, ladders may be made more corrosion resistant by painting or the ladder may be made of a material that is inherently corrosion-resistant. The proposed requirement is essentially the same as existing requirements in § 1910.26(a)(1) and § 1910.27(b)(7)(i), which require employers to take some action to protect against corrosion.

Proposed paragraph (b)(7) requires ladder surfaces to be free of puncture or laceration hazards. The proposed provision is a consolidation of similar requirements found in existing § 1910.25(b)(1)(i) and (c)(2)(i)(f), § 1910.26(a)(1) and (a)(3)(viii), and § 1910.27(b)(1)(iv).

Proposed paragraph (b)(8) requires that ladders be used only for the purposes for which they were designed. This proposed requirement is based on requirements applicable to portable wooden ladders in existing § 1910.25(d)(2) and portable metal ladders in existing § 1910.26(c)(3)(vii). The intent of this requirement is to prohibit the use of a ladder as a scaffold plank, gangway, material hoist, brace, or other application unless it is designed for that application. The intent of the proposed paragraph is *not* to prohibit employees from working while on ladders, for example, performing painting activities while on a ladder. OSHA believes the requirement is reasonable for all ladders, and no additional burden is anticipated.

Proposed paragraph (b)(9) requires ladders to be inspected before use to identify any visible defects that could cause employee injury. This requirement is essentially the same as requirements in existing § 1910.25(d)(1)(x) for portable wooden ladders and § 1910.27(f) for fixed ladders. It is also consistent with requirements in the ANSI A14 series national consensus standards for ladders.

OSHA's intent is that a short visual inspection of the ladder be made to ensure that it is properly set up and safe to use. The inspection may include such things as checking for firm footing, engagement of spreader or locking devices (if so equipped) and missing or damaged components of the ladder. OSHA does not expect a ladder to be inspected multiple times per work shift, unless there is a reason to believe a ladder may have been damaged due to an event such as being dropped. After the employee is trained to inspect ladders (*see* § 1910.30, Training) the actual inspection process could be accomplished as the employee sets up, approaches, or climbs the ladder.

Proposed paragraph (b)(10) requires ladders with structural or other defects to be tagged "Do Not Use" or with similar language, in accordance with § 1910.145. It also requires the ladder to be removed from service until repaired, in accordance with § 1910.22(d), or replaced. This proposed paragraph is a consolidation and editorial revision of existing requirements in § 1910.25(d)(1), § 1910.26(c)(2), and § 1910.27(b).

Proposed paragraphs (b)(11), (b)(12), and (b)(13), together, enable employees to climb ladders safely by using proper climbing techniques and prohibiting employers from permitting employees to carry materials that would prevent them from having both hands free to hold onto the ladder. The proposed paragraphs are consistent with the construction industry standards at § 1926.1053(b)(20), (b)(21), and (b)(22),

and generally consistent with the ANSI A14 series consensus standards for ladders. OSHA's intent is for employers to ensure that employees maintain three points of contact with the ladder when ascending or descending. (Please note this requirement *only* addresses the act of moving up or down a ladder, not working from a ladder.)

Paragraph (c) Portable Ladders

Proposed paragraph (c) sets specific, additional requirements for portable ladders. OSHA proposes to: (1) Remove many existing paragraphs that contain detailed specifications for the design and construction of portable ladders, and (2) no longer address special-purpose ladders, such as painter's stepladders and mason's ladders, in individual paragraphs. In this rulemaking, OSHA uses performance-oriented language, where possible.

Proposed paragraph (c)(1) requires that rungs and steps of portable metal ladders be corrugated, knurled, dimpled, coated with skid-resistant material, or otherwise treated to minimize the possibility of slipping. This provision is nearly identical to existing § 1910.26 (a)(1)(v), and has been editorially changed for clarity.

Proposed paragraph (c)(2) requires that each stepladder or any combination ladder that is used in a stepladder mode be designed with a metal spreader or locking device to hold the front and back sections securely in an open position while in use. This requirement has been changed for clarity and is consistent with existing requirements in § 1910.25(c)(2)(i)(*f*) and § 1910.26(a)(3)(viii).

Proposed paragraph (c)(3) prohibits loading ladders beyond the maximum intended load for which they were designed and tested, or beyond the manufacturer's rated capacity. The maximum intended load, as defined in proposed paragraph § 1910.21(b), includes the weight of the worker and all tools and supplies carried. Manufactured ladders are designed, tested, and in most cases, load-rated and labeled.

Proposed paragraph (c)(4) requires that ladders be used only on stable and level surfaces unless the ladders are secured or stabilized to prevent accidental displacement. The proposed paragraph replaces similar language in existing § 1910.25(d)(2)(iii) and § 1910.26(c)(3)(iii) and is consistent with the construction industry standard at § 1926.1053(b)(6) and ANSI A14.1–2000.

Proposed paragraph (c)(5) prohibits the use of portable single-rail ladders. The provision is consistent with the construction industry ladder standard at § 1926.1053(b)(19). In the preamble to the final rule of that standard (55 FR 47681, November 14, 1990), OSHA said it was prohibiting their use because it believed "that single-rail ladders are inherently difficult to use and hazardous because of their instability * * *." OSHA believes that single rail ladders are also unsafe in general industry.

Proposed paragraph (c)(6) is new and requires that ladders not be moved, shifted, or extended while occupied by an employee. Moving a ladder while it is occupied is unsafe, whether an employee on a ladder "hops" with the ladder in a lateral direction, or a ladder is extended or moved laterally by one employee while occupied by another. This is identical to the construction industry requirement at § 1926.1053(b)(11).

Proposed paragraph (c)(7) requires that ladders placed in any location where they can be displaced by other activities or by traffic, such as ladders used in passageways, doorways, or driveways, be secured to prevent accidental displacement unless a temporary barricade, such as a row of traffic cones, is used to keep the activities or traffic away from the ladder. The proposed paragraph is clearer than existing § 1910.25(d)(2)(iv) and identical to the existing construction industry requirement at § 1926.1053(b)(8).

Proposed paragraph (c)(8) is an editorial revision of existing § 1910.25(d)(2)(xii) which prohibits the top of a stepladder from being used as a step because it may decrease stability.

Proposed paragraph (c)(9) prohibits the use of a non-self-supporting ladder on slippery surfaces unless it is secured and stabilized to prevent accidental displacement. This paragraph is consistent with existing requirements in § 1910.25(d)(2)(i) and the construction industry standard at § 1926.1053(b)(7). It is based upon ANSI A14.1–2000.

Proposed paragraph (c)(10) requires the top of a non-self-supporting ladder be placed with the two rails supported unless it is equipped with a single support attachment. Such an attachment is designed to provide greater stability. This is consistent with the existing requirement in § 1910.26(c)(3)(iv) and the construction industry standard at § 1926.1053(b)(10).

Proposed paragraph (c)(11) requires that when portable ladders are used to gain access to an upper landing surface, the ladder side rails must extend at least 3 feet (0.9 m) above that upper landing surface. This additional length enables an employee to hold onto the ladder while stepping from the ladder onto the upper landing surface, providing safer access. The proposed paragraph is consistent with the existing requirement in § 1910.25(d)(2)(xv) and ANSI A14.1–2000. OSHA notes that after-market ladder extensions, such as walk-through railing systems, may be used to increase the length of a ladder to meet this requirement. When the ladder's top rung is level with or slightly below the upper landing surface, and the rail extensions are securely attached (that is, secured to the extent necessary to stabilize the extension and not expose the employee to a falling hazard from the extension's displacement), the rail extensions would be considered part of the ladder itself. The use of ladder extensions would also have to meet the requirements of proposed (c)(14) of this section which states that ladders shall not have their reach increased by other means unless specifically designed for the application.

Proposed paragraph (c)(12) requires that when work is performed on or near electrical circuits, the work practice requirements of subpart S, Electrical, apply to protect against electrical hazards. The proposed requirement is essentially the same as existing § 1910.26(c)(3)(viii).

Proposed paragraph (c)(13) prohibits ladders and ladder sections from being tied or fastened together to provide a longer length unless they are specifically designed for such use. The proposed provision is essentially the same as existing § 1910.26(c)(3)(vi), and is intended to prevent employees from using unsafe rigging methods.

Proposed paragraph (c)(14) prohibits ladders and ladder sections from having their reach increased by other means (for example, placing a box under a ladder), unless the length extension is specifically designed for the application. This proposed requirement replaces existing § 1910.25(d)(2)(v), which explicitly lists boxes and barrels, with more general language. This proposed paragraph is consistent with the ANSI A14 series consensus standards.

Paragraph (d) Fixed Ladders

In paragraph (d), OSHA proposes to revise existing § 1910.27 to eliminate unnecessary, overly specific requirements and to clarify and update others. To assist in compliance, OSHA has included figures D–2 through D–5 in the regulatory language.

In paragraph (d)(1), OSHA proposes that fixed ladders be capable of supporting their maximum intended load. This provision replaces the current specification requirement with a more

general performance requirement. The Agency requests comment on whether the existing provisions should be maintained in lieu of the proposed requirement.

Proposed paragraph (d)(2) would apply to new installations, requiring that fixed ladders installed on or after the effective date of the final rule be designed, constructed, and maintained as proposed in (d)(2)(i) and (ii).

Proposed paragraph (d)(2)(i) requires that fixed ladders be capable of supporting at least two live loads of at least 250 pounds (113 kg) each, concentrated between any two consecutive attachments, as well as anticipated loads caused by ice buildup, winds, rigging, and impact loads (e.g., impact load resulting from an employee falling onto the ladder). If it is anticipated that the ladder will be used by more than two employees simultaneously, then the number and position of additional concentrated live loads of 250 pounds (113 kg) must also be included in determining the capabilities of fixed ladders. Proposed paragraph (d)(2)(ii) requires that each step or rung be capable of supporting at least a single concentrated load of 250 pounds (113 kg) applied in the middle of the step or rung.

OSHA proposes the two provisions in (d)(2)(i) and (d)(2)(ii) as a replacement for existing requirements in § 1910.27(a)(1)(i) to (iv). Existing § 1910.27(a)(1)(i) requires the ladder to support only a single concentrated load of 200 pounds, whereas the proposal requires the ladder to support greater loads. The proposal is consistent with the national consensus standard, ANSI A14.3–2002, and OSHA's construction industry standard at § 1926.1053(a)(1)(iii). The Agency notes that the ANSI requirement, which is based on loads of 250 pounds (113 kg), reflects OSHA's belief that 250 pounds (113 kg) is the average weight of an employee with tools.

Proposed paragraph (d)(3) requires that the minimum perpendicular distance from the centerline of the steps and rungs, or grab bars, or both, to the nearest permanent object in back of the ladder be 7 inches (18 cm), except in the case of an elevator pit ladder, for which a minimum perpendicular clearance of 4.5 inches (11 cm) is required. In addition, the employer must ensure that grab bars do not protrude on the climbing side beyond the rungs of the ladder which they serve. The proposed requirement is a revision of existing § 1910.27(c)(4) and (c)(5) in which OSHA has removed the language that allows for a reduction of the minimum clearance to account for unavoidable obstructions. As OSHA stated in the final rule to the construction industry standard, "[it] believes that, in general, the minimum clearance requirement is necessary, regardless of any obstructions, so that employees can get safe footholds on ladders." (55 FR 47675.) This change is consistent with the most recent edition of the pertinent provisions of the national consensus standard, ANSI A14.3–2002, as well as the construction industry standard at § 1926.1053(a)(13).

Proposed paragraphs (d)(4) through (d)(8) address ladder extensions and grab bars. To provide safe transition from a fixed ladder to a landing surface, fixed ladders (except those at the top of manholes) must extend above the access or egress level or landing platform either by the continuation of the rungs for use as horizontal grab bars or by providing vertical grab bars. Proposed paragraph (d)(4) requires side rails of through or side-step ladders to extend 42 inches (1.1 m) above the top of the access level or landing platform served by the ladder. For a parapet ladder, the access level must be the roof if the parapet is cut to permit passage through the parapet; if the parapet is continuous, the access level must be the top of the parapet.

Proposed paragraph (d)(5) requires the steps or rungs of through ladder extensions to be omitted from the extensions. In addition, the extensions of the side rails must be flared to provide not less than 24 inches (61 cm) nor more than 30 inches (76 cm) clearance between side rails. Where ladder safety systems are provided, the maximum clearance between side rails of the extensions must not exceed 36 inches (91 cm). Proposed paragraph (d)(6) requires the side rails and the steps or rungs of side-step ladders to be continuous in the extension.

The proposed requirements in (d)(4), (d)(5), and (d)(6) are a revision and update of the existing requirement at § 1910.27(d)(3). The proposed provisions are consistent with OSHA's construction industry standard at §§ 1926.1053(a)(24) through (a)(26) and with the national consensus standard, ANSI A14.3–2002.

Proposed paragraphs (d)(7) and (d)(8) specify criteria for grab bars. The proposed requirements are consistent with existing § 1910.27(d)(4), but are editorially revised for clarity.

Proposed paragraph (d)(9) addresses ladders that terminate at hatch covers. The proposed provision requires that the opening be large enough for the employee to pass and that it be counterbalanced to remain open, thus preventing accidental closure. The proposed requirement replaces the overly specific provision of existing § 1910.27(c)(7) and is consistent with similar provisions in the national consensus standard, ANSI A14.3–2002.

Proposed paragraph (d)(10) requires fixed individual rung ladders to be constructed to prevent the employee's feet from sliding off the end. This requirement replaces existing § 1910.27(b)(1)(v) and is consistent with the construction industry standard at § 1926.1053(a)(5).

Proposed paragraph (d)(11) prohibits the use of fixed ladders having a pitch greater than 90 degrees from the horizontal. The proposed provision is a revision of the existing requirements in § 1910.27(d)(1) through (d)(4). The existing requirements are overly specific and complex, whereas the proposed provisions are easier to understand.

Proposed paragraph (d)(12) addresses the step-across distance from the centerline of the steps or rungs of a fixed ladder. Proposed paragraph (d)(12)(i) requires that the step-across distance for *through ladders* be between 7 inches (18 cm) and 12 inches (30 cm) to the nearest edge of the structure, building, or equipment accessed. Proposed paragraph (d)(12)(ii) requires that the step-across distance be between 15 inches (38 cm) and 20 inches (51 cm), measured from the centerline of the ladder, at the point of access and egress to a platform edge for *side-step ladders.* (*See* Figure D–2.) The proposed provisions are based on existing § 1910.27(c)(6), which address the step-across distances for all fixed ladders. In the proposal, OSHA addresses step-across distances for through ladders and side-step ladders separately. OSHA believes the revised language allows greater flexibility and provides the same degree of safety. It is also consistent with the construction industry standard at § 1926.1053(a)(16) and the national consensus standard for fixed ladders, ANSI A14.3–2002.

Proposed paragraph (d)(13) addresses fixed ladders without cages or wells. Proposed paragraph (d)(13)(i) requires ladders without cages or wells to have a clear width of at least 15 inches (38 cm) on each side of the centerline of the ladder to the nearest permanent object to allow safe climbing clearance (*see* Figure D–2). This proposed provision revises existing § 1910.27(c)(2) for clarity. It is also consistent with the construction industry standard at § 1926.1053(a)(17) and the national consensus standard for fixed ladders, ANSI 14.3–2002.

Proposed paragraph (d)(13)(ii) requires a minimum perpendicular distance of 30 inches (76 cm) from the

center line of the steps and rungs to the nearest object on the climbing side to allow safe climbing clearance. This proposed provision would replace a number of specifications found at existing § 1910.27(c)(1) for clearance distances based on the pitch of the ladder. The proposed language removes the overly detailed information and establishes a single, minimum clearance distance regardless of pitch. This proposed provision is consistent with the construction industry standard at § 1926.1053(a)(14) and the national consensus standard for fixed ladders, ANSI A14.3–2002. An exception is permitted when unavoidable obstructions on the climbing side of a fixed ladder are encountered. The minimum clearance then may be reduced to 24 inches (61 cm), as long as deflector plates are provided to protect the employee's head. A similar exception may be found in existing § 1910.27(c)(7) and its accompanying Figure D–5. This proposed paragraph is consistent with the construction industry standard at § 1926.1053(a)(15) and national consensus standard, ANSI A14.3–2002.

Paragraph (d) ends with a note stating that the duty to provide fall protection for employees working on fixed ladders is found at proposed § 1910.28 and the criteria for such fall protection systems is found at proposed § 1910.29.

Paragraph (e) Mobile Ladder Stands and Mobile Ladder Stand Platforms (Mobile Ladder Stands and Platforms)

Proposed paragraph (e) covers mobile ladder stands and mobile ladder stand platforms (mobile ladder stands and platforms). The proposed design requirements are a performance language revision of the design specifications provided in existing paragraphs (a) and (f) of § 1910.29. All of the requirements proposed in this paragraph are consistent with the consensus standard, ANSI A14.7–2006.

Proposed paragraph (e)(1) addresses general design requirements for mobile ladder stands and platforms. Proposed paragraph (e)(1)(i) requires mobile ladder stands and platforms to have a step width of at least 16 inches (41 cm). Proposed paragraph (e)(1)(ii) requires steps, standing levels, and platforms of mobile ladder stands and platforms be provided with a slip-resistant surface. This surface may be an integral part of the structure or may be provided by a durable, secondary process or operation, e.g., dimpling, knurling, shot-blasting, coating, metal spraying, or slip-resistant tape. These requirements provide employees with a reasonable level of safe footing.

The next two proposed paragraphs are important to the stability of the unit and the balance of the employee using it. Proposed paragraph (e)(1)(iii) requires that wheels or casters, when under load, be designed to support their proportional share of four times the rated load, plus the proportional share of the unit's weight. This requirement is consistent with the existing provision at § 1910.29(a)(4).

Proposed paragraph (e)(1)(iv) requires mobile ladder stands and platforms, which use wheels or casters, to be equipped with a system to impede horizontal movement. This proposed provision is written in performance language, replacing the existing specification requirements in § 1910.29(a)(4).

Proposed paragraph (e)(1)(v) requires that the maximum work surface heights of mobile ladder stands and platforms not exceed four times the least base dimension without additional support. When greater heights are needed to prevent toppling, outriggers, counterweights, or comparable means must be used to maintain this minimum base ratio. The proposed paragraph would replace similar existing requirements in § 1910.29(a)(3)(i) and (f)(2).

Proposed paragraph (e)(1)(vi) requires mobile ladder stands and platforms to be capable of supporting at least four times their intended load. This proposed paragraph replaces a similar requirement in existing § 1910.29(f)(5), which requires a safety factor of four.

Proposed paragraph (e)(1)(vii) prohibits moving mobile ladder stands and platforms when occupied. This new requirement is based on the national consensus standard ANSI A14.7–2006, and is intended to prevent employees from falling from a mobile ladder stand or platform when it is being moved. When the additional weight of an employee is added to the top of a unit, the center of gravity is raised and the unit is less stable than when there is no weight on it. Also, an employee may lose his or her balance when a unit moves suddenly, or when simply riding on a unit.

Proposed paragraph (e)(2) addresses design requirements for mobile ladder stands. Proposed paragraph (e)(2)(i) requires that steps be uniformly spaced and arranged with a rise of not more than 10 inches (25 cm), and a depth of not less than 7 inches (18 cm). The slope of the step stringer (inclined side step support) to which the steps are attached must not be more than 60 degrees measured from the horizontal. This proposed paragraph is essentially the same as existing § 1910.29(f)(3) except that the existing provision requires the slope of the steps section to be a minimum of 55 degrees, and a maximum of 60 degrees, measured from the horizontal.

Proposed paragraph (e)(2)(ii) requires all ladder stands with a top step height between 4 and 10 feet (1.2 m and 3 m) to be provided with handrails having a vertical height of 29.5 inches (75 cm) to 37 inches (94 cm) as measured from the front edge of a step. The use of removable gates or non-rigid members, such as chains, is permitted for special use applications. This proposed requirement is essentially the same as the existing provision at § 1910.29(f)(4)(ii), except that the existing requirement does not set a maximum height.

Proposed paragraph (e)(2)(iii) requires all ladder stands with a top step over 10 feet high (3 m) to have the top step protected on three sides by a handrail that has a vertical height of at least 36 inches (91 cm). The use of removable gates or non-rigid members such as chains is permitted for special use applications. Top steps that are 20 inches (51 cm) or more, front to back, must be provided with a midrail and toeboard.

Proposed paragraphs (e)(2)(ii) and (e)(2)(iii) replace existing paragraph § 1910.29(f)(4)(i), which requires units to be equipped with handrails when they have more than five (5) steps or measure 5 feet (1.5 m) in vertical height to the top step. This provision ensures employees have a handhold to prevent falling while they climb.

Proposed paragraph (e)(2)(iv) is new and requires the standing areas of mobile ladder stands to be within the base frame. This requirement enhances the stability of the unit by keeping the center of gravity within the base frame, thus reducing the chance of tipping.

Proposed paragraph (e)(3) addresses design requirements for mobile ladder stand platforms. Proposed paragraph (e)(3)(i) requires steps on a ladder stand platform to conform to paragraph (e)(2)(i) of this section. An exception to this requirement is provided when the employer demonstrates that conforming to paragraph (e)(2)(i) is not practicable. Steeper slopes or vertical ladders may be used, provided the unit is stabilized to prevent its overturning. OSHA realizes that in a few applications the steps to a mobile ladder stand platform may have to be greater than the required 60 degree maximum prescribed in proposed paragraph (e)(2)(i) of this paragraph. OSHA does not seek to prohibit the use of such units; however, this exception acknowledges that need and still provides for employee safety.

Proposed paragraph (e)(3)(ii) requires all mobile ladder stand platforms with a platform height between 4 feet and 10 feet (1.2 m and 3 m) to be provided with handrails having a vertical height of 29.5 inches (75 cm) to 37 inches (94 cm) measured from the front edge of a step. Handrails in the platform area are required to have a vertical height of at least 36 inches (91 cm) and include a midrail to protect employees from the fall hazard. This requirement is a clarification of the general provision found in proposed § 1910.29(b)(1). The use of removable gates or non-rigid members, such as chains, is permitted for special-use applications. This proposed requirement is essentially the same as the existing provision at § 1910.29(f)(4)(ii), except the existing requirement does not set a maximum height. OSHA is proposing a maximum height in accordance with anthropomorphic studies (Ex. OSHA–S041–2006–0666–0004).

Proposed paragraph (e)(3)(iii) requires all mobile ladder stand platforms with a platform height of over 10 feet (3 m) to have guardrails and toeboards provided on the exposed sides and ends of the platform. The use of removable gates or non-rigid members, such as chains, would be permitted for special-use applications. Toeboards prevent objects from falling onto employees who may be below the unit. The requirements in proposed paragraphs (e)(2) and (e)(3) are based on ANSI A14.7–2006, American National Standard for Mobile Ladder Stands and Mobile Ladder Stand Platforms.

Section 1910.24 Step Bolts and Manhole Steps

Proposed § 1910.24 establishes requirements for step bolts and manhole steps. Step bolts and manhole steps are used in the telecommunications industry, gas and electric utility industries, and some large manufacturing plants, usually in lieu of conventional ladders (*e.g.,* fixed ladders). While the Agency has a number of requirements addressing ladders, those requirements are not consistently or directly applicable to step bolts and manhole steps. For this reason OSHA is proposing requirements that address the design, capacity, and strength of step bolts and manhole steps. OSHA believes that these requirements provide for the safe use of this equipment. The provisions include the general requirements in existing § 1910.268(h) for pole steps and manhole ladders. Pole steps (normally used on wooden utility poles) and step bolts (normally used on metal poles or towers) are covered jointly under the proposed provisions for step bolts, and are based upon provisions in § 1910.268, Telecommunications, and the national consensus standards, American Society for Testing and Materials (ASTM) C 478–07, Standard Specification for Precast Reinforced Concrete Manhole Sections, and ANSI/TIA/EIA 222G–1996 and 2006, Structural Standard for Antenna Supporting Structures and Antennas.

OSHA recognizes that many workplaces already have step bolts or manhole steps installed, and that it could be unreasonably disruptive and burdensome to require employers to retrofit those bolts and steps to comply with certain provisions of the proposed standard. Therefore, OSHA is proposing certain design changes to step bolts and manhole steps on new installations performed 90 days after the standard's effective date. These proposed provisions are described individually below.

As part of this proposal, OSHA is removing the requirements in § 1910.268(h), and instead requiring that the telecommunications industry comply with the provisions for ladders, step bolts, and manhole steps in subpart D. Additionally, as per § 1910.269 (Electric power generation, transmission, and distribution), ladders, step bolts, and manhole steps used in the electric power industry must meet the requirements of subpart D. Therefore, OSHA is proposing § 1910.24 as the minimum requirements necessary to ensure the safety of employees climbing and descending step bolts and manhole steps. These provisions are essentially the same as those in the 1990 proposed rule (55 FR 13360).

The rules in proposed § 1910.24 are performance-based where possible. For example, proposed paragraph § 1910.24(a)(6) sets performance-based strength requirements that do not specify the types or sizes of materials that must be used. Where dimensions are specified, such as in paragraphs (b)(2)(iii) and (b)(2)(iv), they are based on anthropometrics, existing § 1910.268, and current industry practices and standards, such as the national consensus standard, ASTM C 478–07.

Paragraph (a) Step Bolts

Proposed paragraph (a) addresses the design, capacity, and use of step bolts. Proposed paragraph (a)(1) requires that all step bolts installed on or after the effective date of the final rule that are used in corrosive environments be constructed of, or coated with, a material that will retard corrosion of the step or bolt. This is important to protect against deterioration, and the resultant weakening of the step bolt.

Proposed paragraph (a)(2) requires step bolts to be designed to prevent the employee's foot from slipping or sliding off the end of the step bolt, which could contribute to a fall.

Proposed paragraph (a)(3) requires step bolts to be spaced uniformly, 12 inches (30 cm) minimum center to center, alternately spaced, and an 18 inches (46 cm) maximum spacing. To assist in compliance, OSHA has included figure D–6 in the proposed regulatory text. The proposed paragraph matches existing § 1910.268(h)(2) and the 1996 version of ANSI/EIA/TIA 222, both of which allow step bolts to be spaced as much as 18 inches (46 cm) apart, 36 inches (91 cm) on any one side. An exception to this requirement permits the spacing from the entry and exit surface to the first step bolt to be different from the spacing between the other step bolts. This exception allows the height of the entry or exit surface to be modified without necessitating the reinstallation of all the step bolts.

OSHA notes that the 2006 version of ANSI/EIA/TIA 222 specifies that the center to center spacing between alternately spaced step bolts be 10 inches (25 cm) minimum and 16 inches (41 cm) maximum as opposed to the 12- and 18-inch (30 and 46 cm) requirements of the proposal. The Agency requests comment on whether to adopt the language of the 2006 ANSI/EIA/TIA standard.

Proposed paragraph (a)(4) requires that the minimum clear width of each step bolt be 4.5 inches (11 cm). Proposed paragraph (a)(5) requires the minimum perpendicular distance between the centerline of the step bolt to the nearest permanent object in back of the bolt to be at least 7 inches (18 cm). Where obstructions cannot be avoided, toe clearances may be reduced to 4.5 inches (11 cm). Both of these provisions ensure there is adequate room both on and behind the step bolt to enable the employee to stand securely.

Proposed paragraph (a)(6) requires step bolts installed before the effective date of the final rule to be capable of supporting their maximum intended load. All walking-working surfaces must be capable of supporting employees and equipment, without failure. The proposed language of (a)(6) "grandfathers," or allows the continued use of, existing step bolts that are capable of supporting their maximum intended load.

Proposed paragraph (a)(7) requires each step bolt installed on or after the effective date of the final rule to be

capable of supporting, without failure, at least four times its maximum intended load. OSHA believes that this requirement is necessary to provide a safety factor to ensure that step bolts do not fail during use. Common engineering practice demands that a safety factor be provided in any product design to account for any unanticipated factors that may stress the product beyond its designed capabilities. OSHA's understanding is that a ⅝-inch (1.6-cm) diameter steel step bolt is normally expected to meet this requirement, and step bolts of this size are currently used in the industry.

Proposed paragraph (a)(8) requires step bolts to be visually inspected before each use and to be maintained in accordance with proposed § 1910.22. This provision reinforces the necessity to meet the general requirements of all walking-working surfaces. As with the requirements in proposed § 1910.22, this visual inspection is not intended to be burdensome, and can be performed as the employee climbs the unit.

Proposed paragraph (a)(9) requires step bolts that are bent more than 15 degrees from the perpendicular to be removed and replaced with bolts that meet the requirements of this section. The proposed requirement is intended to apply to displacement in any direction the bolt may be bent. The intent of this provision is to replace bolts that are bent to such a degree that an employee's foot may slip or slide off the end of the step bolt, which may cause an employee to fall.

Paragraph (b) Manhole Steps

Proposed paragraph (b) addresses the design, capacity, and use of manhole steps. Proposed paragraph (b)(1) requires manhole steps installed before the effective date of the final rule to be capable of supporting their maximum intended load. The proposed language "grandfathers," or allows the continued use of, existing manhole steps. Under proposed § 1910.22(b), employers would be obligated to ensure that all walking-working surfaces are designed, constructed, and maintained to support their maximum intended load. This provision is consistent with the requirements in existing § 1910.268(h) that address steps in manholes used in the telecommunications industry.

Proposed paragraph (b)(2) sets requirements for the design of manhole steps. The requirements apply to manhole steps installed on or after the effective date of the final rule. Proposed paragraph (b)(2)(i) requires that all manhole steps be provided with slip-resistant surfaces such as corrugated, knurled, or dimpled surfaces.

Proposed paragraph (b)(2)(ii) requires all manhole steps that are used in corrosive environments to be constructed of, or coated with, a material that will retard corrosion of the step. This corrosion resistance will help prevent deterioration that can lead to failure of the manhole step, which may cause the employee to fall.

Proposed paragraph (b)(2)(iii) requires that manhole steps have a minimum clear step width of 10 inches (25 cm). Proposed paragraph (b)(2)(iv) requires that steps be spaced uniformly, not more than 16 inches (41 cm) apart. As in proposed paragraph (a)(3) above, an exception to this requirement permits the spacing from the entry and exit surface to the first manhole step to be different from the spacing between the other steps. This exception allows for the height of the entry or exit surface to be modified without necessitating the reinstallation of the entire set of manhole steps.

Proposed paragraph (b)(2)(v) would require manhole steps to have a minimum perpendicular distance between the centerline of the manhole step to the nearest permanent object in back of the step of at least 4.5 inches (11 cm). Proposed paragraph (b)(2)(vi) requires the steps be designed to prevent the employee's foot from slipping or sliding off the end of the manhole step, which may result in a fall.

Proposed paragraph (b)(3) requires manhole steps to be visually inspected before each use and maintained in accordance with proposed § 1910.22. The purpose of the inspection is to ensure that no manhole steps are damaged or missing. This proposed paragraph is essentially a restatement of the requirements in proposed § 1910.22 for inspecting and maintaining walking-working surfaces. The visual inspection is expected to take only a few seconds before use of each step.

Section 1910.25 Stairways

Proposed § 1910.25 provides stairway design and installation criteria. This proposed section combines, clarifies, and updates existing requirements, and adds new provisions for stairs and stairways. The majority of the requirements for this section are derived from existing § 1910.24, Fixed industrial stairs, and are consistent with American National Standard Institute (ANSI) A1264.1–2007, Safety Requirements for Workplace Walking/Working Surfaces and Their Access; Workplace, Floor, Wall and Roof Openings; Stairs and Guardrail Systems, the National Fire Protection Association (NFPA) 101–2006, Life Safety Code, and the International Code Council's (ICC's) International Building Code ICC–2003.

On March 28, 2002, the Office of Management and Budget (OMB) published a request for comment regarding the "Draft Report to Congress on the Costs and Benefits of Federal Regulations" (67 FR 15014), specifically requesting nominations of rules and regulations in need of reform. In response to this request, the Copper and Brass Fabricators Council (CBFC) (Ex. 3) identified OSHA's subpart D as in need of revision to permit use of ship and spiral stairs. Specifically, CBFC requested that OSHA revise its existing rule in § 1910.24(b), which requires fixed stairs (referred to as standard stairs in this proposal) and prohibits spiral stairs except for special limited use and secondary access situations where it is not practical to provide a conventional stairway. CBFC suggested that OSHA revise this standard to permit the installation and use of ship stairs and spiral stairs in more circumstances. In the earlier rulemaking (1990), OSHA had proposed to allow more flexibility in the use of these stairs. In this proposed rule, OSHA would permit the installation of spiral, ship, and alternating tread-type stairs for limited secondary use where it is not practical to provide a standard stairway and provides design criteria for them. Provisions to prevent employees from falling from unprotected sides or edges of stairway landings are provided in proposed § 1910.28, Duty to have fall protection.

Paragraph (a) General Requirements

Proposed paragraph (a) contains general requirements applicable to all stairways. In this proposed rule, the Agency is using the term "standard stairs" in place of the term "fixed industrial stairs" which is used in the existing standard. OSHA has used the term "fixed industrial stair" since 1971 because the term was used in the national consensus standard ANSI A64.1–1968 (now ANSI A1264.1–2007) that prescribed requirements for them. OSHA believes the term "standard stairs" is clearer and easier to understand and therefore is proposing to use the new term. The Agency is proposing to define the term "standard stairs" to mean a permanently installed stairway and to make it clear that ship stairs, spiral stairs, and alternating tread-type stairs are not standard stairs.

OSHA's proposed change in terminology is consistent with current industry codes and standards that use the terms "standard stairs," "stairways," and "fixed stairs" interchangeably. The Life Safety Code (NFPA 101–2006)

includes requirements for "standard stairs" that are similar to OSHA's requirements for "fixed industrial stairs," but does not define "standard stairs." The International Building Code (IBC–2003) defines "stairways," but not "fixed" or "standard stairs," and also includes requirements similar to OSHA's for "fixed industrial stairs." The consensus standard ANSI A1264.1–2007 uses the term "fixed stairs." The Agency requests comment on whether this change in terminology (from fixed industrial stairs to standard stairs) is appropriate or whether it leaves a gap in the coverage of stairways.

Proposed paragraph (a)(1) establishes the scope of this section, making it clear that generally all stairs, including standard stairs, spiral stairs, ship stairs, and alternating tread-type stairs, are covered. Additional requirements for stairs serving as required exit routes are located in subpart E, Means of Egress. This provision is based on existing paragraph § 1910.24(a) and is consistent with ANSI A1264.1–2007. It also makes clear that this section does *not* cover stairs serving floating roof tanks, stairs on scaffolds, stairs designed into a machine or piece of equipment, or stairs on self-propelled motorized mobile equipment. To ensure consistency among OSHA standards and assist those working in both construction and general industries, requirements for stairs on scaffolds also are provided in the construction industry standards at § 1926.451. Stairs serving floating roof tanks, stairs designed into a machine or piece of equipment, and stairs on self-propelled motorized mobile equipment are not covered by recognized industry standards, and the Agency does not have any information or sufficient evidence on how to regulate these types of stairs. OSHA requests comments on whether there is a need to regulate these stairs.

Proposed paragraph (a)(2) is intended to protect employees from falling off unprotected sides and edges. It requires that stairs be equipped with handrails and stair rail systems that meet the requirements of proposed § 1910.28, Duty to have fall protection. OSHA notes that the top rail of a stair rail system may also serve as a handrail when installed in accordance with proposed § 1910.29(f).

Paragraph (a)(3) proposes that the vertical clearance above any stair tread to an overhead obstruction must be at least 6 feet, 8 inches (1.8 m) measured from the leading edge of the tread, except as proposed in (c)(3) below. This is a change from the existing rule, found in § 1910.24(i), where the clearance is required to be at least 7 feet (2.1 m). This proposed change is consistent with national consensus standards (i.e., ANSI A1264.1–2007).

In paragraphs (a)(4) through (a)(6), OSHA proposes requirements for riser heights and stairway landing platform widths. All three provisions are based on requirements in existing subpart D but are rewritten in performance-based language for ease of compliance and enforcement. These proposed requirements are the minimum criteria OSHA feels are necessary to ensure employee safety when traversing stairs.

In paragraph (a)(4), OSHA proposes that stairs be installed with uniform riser heights and tread depths between landings. This provision is essentially the same as the existing requirement in § 1910.24(f).

OSHA proposes, in § 1910.25(a)(5), that stairway landings and platforms be no less than the width of the stair and not less than 30 inches (76 cm) in length as measured in the direction of travel. The proposed language is essentially the same as that in existing § 1910.24(g).

In paragraph (a)(6), OSHA proposes to revise the platform width requirements where doors or gates open directly on a stairway. Specifically, OSHA proposes that when a door or a gate opens directly on a stairway, a platform must be provided, and the swing of the door or gate must not reduce the effective usable depth to less than 20 inches (51 cm) for platforms installed before 90 days after the effective date of the final rule; and 22 inches (56 cm) for platforms installed thereafter. The 20 or 22 inches (51 or 56 cm) is measured beyond the swing radius of the door after the door is opened fully. (*See* Figure D–7.) This change increases the effective usable depth of the platform, required in existing § 1910.23(a)(10), by 2 inches (5 cm), making OSHA's proposal consistent with the national consensus standard, ANSI A1264.1–1995 (R2002). OSHA notes that the 2007 version of ANSI/ASSE A1264.1, section 6.11, *Door and Gate Openings,* states, "Stairs shall have landings at door openings and gate openings. During its swing, the door shall leave not less than one-half of the required width of the landing unobstructed. The door shall project not more than seven inches (180 mm) into the required width of the landing when the door is fully open." OSHA requests comment on how much clear, unobstructed space is necessary on landing platforms where doors or gates open directly onto them.

In paragraph (a)(7), OSHA proposes that stairs be designed and constructed to carry five times the normal anticipated live load, but never less than a concentrated load of 1,000 pounds (454 kg) applied at any point. This provision is nearly the same as existing § 1910.24(c), which applies to fixed industrial stairs, except that the proposed provision will apply to *all* stairs covered by this section. In addition, it is consistent with ANSI/ASSE A1264.1–2007.

In paragraph (a)(8), OSHA proposes that standard stairs be provided for access from one walking-working surface to another where operations necessitate regular and routine travel between levels and for access to operating platforms for equipment. An exception allows the use of winding stairways on tanks and similar round structures where the diameter of the structure is five (5) feet (1.5 m) or more. OSHA recognizes that standard stairs are the principal means of providing safe access from one working level to another. Therefore, this provision is designed to ensure that employees have a reasonable means of access to different walking-working surfaces. This provision is essentially the same as the existing requirement in § 1910.24(b) except that it has been rewritten for clarity. OSHA does not intend for this section to preclude the use of fixed ladders for access to elevated tanks, towers, and similar structures, or to overhead traveling cranes, when the use of fixed ladders is common practice. The proposed provision is consistent with the national consensus standard, ANSI/ASSE A1264.1–2007.

In paragraph (a)(9), OSHA proposes to limit the use of spiral stairs, ship stairs, or alternating tread-type stairs to "special limited usage" and "secondary access" situations when the employer demonstrates that it is not practical to provide a standard stairway. This is consistent with the national consensus standard, ANSI/ASSE A1264.1–2007. ANSI does not define "special limited usage" or "secondary access." The ICC Building Code, however, refers to "special limited use" as "a space not more than 250 square feet (23 m^2) in area and serving not more than five occupants, or from galleries, catwalks and gridirons. * * *" The proposal would require employers to demonstrate that it is not practical to provide a standard stairway before using an alternate type of stairway in "special limited use" situations; therefore, it may be helpful to employers if OSHA defines special limited usage. For the purpose of this proposed rule, OSHA's use of the term is the same as the ICC's; however there may be other usages that warrant inclusion. OSHA requests comment on these points. The term "secondary access" is self explanatory and refers to any stairway that is not used as a

primary means of egress. OSHA notes that where spiral stairs, ship stairs, or alternating tread-type stairs are permitted, those stairs must meet the general requirements in proposed § 1910.25(a) and the additional specific requirements for each stair type in paragraphs (c), (d), or (e) of proposed § 1910.25, respectively. Proposed paragraphs (c), (d), and (e) for spiral stairways, ship stairs, and alternating-type stairs respectively, are new and have no counterparts in existing § 1910.24.

Paragraph (b) Standard Stairs

In paragraph (b), OSHA proposes specific requirements for standard stairs. The proposed requirements are the minimum criteria OSHA believes are necessary to allow adequate clearance for employees to negotiate standard stairs safely. These requirements apply in addition to the general requirements in proposed paragraph (a) above. All of the proposed requirements in this paragraph are consistent with the national consensus standard, ANSI/ASSE A1264.1–2007. For compliance assistance, OSHA has included figures D–7 through D–10 in the regulatory language.

Paragraph (b)(1) proposes that standard stairs be installed at angles between 30 and 50 degrees from the horizontal, which is equivalent to existing § 1910.24(e). However, the existing rule allows any combination of riser height and tread depth necessary to achieve the 30 to 50 degree angle, whereas the proposed rule sets a maximum and minimum range, respectively. Proposed paragraphs (b)(2) and (b)(3) set the maximum riser height and the minimum tread depth, allowing an exception when open risers are used. In paragraph (b)(2), OSHA proposes that standard stairs have a maximum riser height of 9.5 inches (24 cm). In paragraph (b)(3), OSHA proposes that standard stairs have a minimum tread depth of 9.5 inches (24 cm) except when open risers are used; that is, standard stairs having open risers can have tread depths of less than 9.5 inches (24 cm). Proposed paragraph (b)(3) differs from the existing rule in that it uses the term "tread depth" instead of "tread run." OSHA believes that stairs currently used in general industry already meet these requirements.

In paragraph (b)(4), OSHA proposes that standard stairs have a minimum width of 22 inches (56 cm) between vertical barriers (such as a stair rail, guardrail, or wall). This requirement is essentially the same as existing § 1910.24(d).

The proposed criteria for spiral stairs, ship stairs, and alternating tread-type stairs presented below in proposed paragraphs (c), (d), and (e), respectively, parallel the provisions provided for standard stairs. They represent the minimum requirements OSHA believes are necessary for employees to traverse spiral stairs, ship stairs, and alternating tread-type stairs safely.

Paragraph (c) Spiral Stairs

In paragraph (c), OSHA proposes specific requirements for spiral stairs. These requirements apply in addition to the general requirements in proposed paragraph (a) above. These provisions are based on NFPA 101–2006.

Proposed paragraph (c)(1) requires that spiral stairways have a clear width not less than 26 inches (66 cm). Proposed paragraph (c)(2) requires spiral stairways to have risers with a maximum height of 9.5 inches (24 cm). In paragraph (c)(3), OSHA proposes that spiral stairs have a minimum amount of headroom above the spiral stairway of 6 feet, 6 inches (2 m) measured vertically from the center of the leading edge of the tread. To maintain a safe tread depth and size for spiral stairs, OSHA proposes in paragraph (c)(4) that spiral stair treads have a minimum depth of 7.5 inches (19 cm) at a point 12 inches (30 cm) from the narrowest edge. Proposed paragraph (c)(5) requires that spiral stairs have uniform size treads.

Paragraph (d) Ship Stairs

In paragraph (d), OSHA proposes specific requirements for ship stairs. These requirements apply in addition to the general requirements in proposed paragraph (a) above. Proposed paragraph (d)(1) requires that ship stairs be installed at a slope of 50 to 70 degrees from the horizontal. Paragraph (d)(2) proposes that ship stairs have open risers. In paragraph (d)(3), OSHA proposes that ship stairs have treads with a minimum depth of 4 inches (10 cm), a minimum width of 18 inches (46 cm), and a vertical rise between tread surfaces in the range of 6.5 to 12 inches (17 to 30 cm). These provisions are based on the national consensus standard, ANSI A1264.1–2007.

Paragraph (e) Alternating Tread-Type Stairs

In proposed paragraph (e), OSHA proposes specific requirements for alternating tread-type stairs. These requirements apply in addition to the general requirements in proposed paragraph (a) above. Proposed paragraph (e)(1) requires that alternating tread-type stairs be installed at a slope between 50 and 70 degrees from the horizontal. Proposed paragraph (e)(2) requires that the distance between handrails be between 20 and 24 inches (51 to 61 cm). Proposed paragraph (e)(3) requires that the stairs have treads with a minimum depth of 8.5 inches (22 cm). Proposed paragraph (e)(4) requires that alternating tread-type stairs have open risers if the depth is less than 9.5 inches (24 cm), and proposed paragraph (e)(5) requires treads that are a minimum of 7 inches (18 cm) wide at the leading edge of the step (nosing). The proposed requirements of this paragraph are based on ANSI A1264.1–2007, NFPA 101–2006, and the 2003 International Building Code.

Section 1910.26 Dockboards (Bridge Plates)

Proposed § 1910.26 establishes requirements for dockboards (bridge plates). This section relocates, updates, and clarifies requirements for dockboards located in existing § 1910.30, Other working surfaces. In addition, two requirements in existing § 1910.30(b) and (c), Forging machine and Veneer machinery, respectively, would be revoked because the hazards addressed in those provisions are already covered elsewhere in proposed subpart D (*e.g.,* § 1910.22) or in other subparts in the general industry standards (e.g., subpart O, Machinery and Machine Guarding, and in particular § 1910.218, Forging machines).

In paragraph (a), OSHA proposes that portable and powered dockboards be capable of supporting their maximum intended load. This requirement essentially restates the general requirement for load support in proposed § 1910.22(b) for all walking-working surfaces, and it is essentially the same as existing provision § 1910.30(a)(1).

In paragraph (b), OSHA proposes that dockboards put into service at least 90 days after the effective date of the final rule be designed, constructed, and maintained to prevent equipment (such as hand trucks and vehicles) from running off the edge. This performance language provision requires that where equipment is used on dockboards, the dockboard must be provided with a means, such as edging or curbing, to prevent equipment from running off the edge. This is a new requirement, which is being proposed to protect employees from injury in the event the equipment falls off the edge of the dockboard.

OSHA proposes in paragraph (c) that portable dockboards be secured in position, either by being anchored or equipped with devices that will prevent their slipping. Where this is infeasible,

the employer must ensure there is substantial contact between the portable dockboard and the unattached surface or surfaces. The dockboard and the unattached surface or surfaces should overlap with one another so that the dockboard does not rock, slide, or slip while being used by employees. The provision is essentially the same as existing provision § 1910.30(a)(2) and is based on ANSI/ASME B56.1–2000, Safety Standard for Low Lift and High Lift Trucks (sections 4.13.2 and 4.13.5).

In paragraph (d), OSHA proposes that vehicles onto which a dockboard has been placed must be prevented from moving (*e.g.,* by using wheel chocks) while the dockboard is being used by employees. If a vehicle rolls forward when a dockboard is in use, the dockboard may fall off the end of the vehicle and an employee may fall as well. The provision identifies positive steps to prevent movement of vehicles rolling forward away from the dock and is essentially the same as the existing § 1910.30(a)(5). The paragraph is consistent with ANSI MH30.2–2005, Portable Dock Leveling Devices: Safety, Performance and Testing.

OSHA proposes in paragraph (e) that portable dockboards be equipped with handholds or other means to permit safe handling. The provision is essentially the same as existing § 1910.30(a)(4) and is based on ANSI/ASME B56.1–2000, Safety Standard for Low Lift and High Lift Trucks (section 4.13.3).

Section 1910.27 Scaffolds (Including Rope Descent Systems)

In § 1910.27, OSHA is proposing significant revisions to the existing general industry scaffold standards. First, OSHA is proposing to remove all the existing scaffolding requirements now located at § 1910.28 and § 1910.29, with the exception of mobile ladder stand requirements in existing § 1910.28(f). Instead, in paragraph (a), it is proposing to require that employers comply with the construction industry standards in § 1926 subpart L, Scaffolds. Requirements for mobile ladder stands are relocated to proposed § 1910.23(e). Second, in paragraph (b) OSHA is proposing to add new requirements for rope descent systems (sometimes called controlled descent systems)—a type of scaffold not now regulated by either OSHA's general industry or construction industry standards.

Paragraph (a) Scaffolds

The primary reason for the proposed changes is to ensure consistency among OSHA standards for scaffolds. The construction industry scaffold standards (subpart L of 29 CFR part 1926) were updated on August 30, 1996 (61 FR 46026), and contain requirements for the same types of scaffolds that are now regulated by the general industry standards. Rather than updating the part 1910 standard to harmonize with the part 1926 standard, OSHA concluded that a better way to ease compliance and ensure regulatory consistency, both now and in the future, is to refer general industry employers to the construction industry standards. OSHA believes that this will ensure consistency in worker protection in both industries, increase understanding of the rules, and reduce any confusion that might occur when employers are subject to two sets of rules for scaffolds—one that applies when general industry work (such as maintenance) is being done and another when construction work is being done. In addition, OSHA believes that many general industry employers who use scaffolds also perform work covered by the construction industry standards and are, therefore, already familiar, and in compliance, with the construction industry scaffold standards. OSHA believes that using just one set of regulations will simplify both compliance and enforcement of the scaffold standards and result in greater employee protection. OSHA notes that all 21 types of scaffolds currently regulated by the general industry standards are also regulated by the construction industry standards.

The following table lists the different types of scaffolding addressed in the existing part 1910 general industry standards, and the corresponding paragraphs in part 1926 construction industry standards.

LIST OF COMPARABLE SCAFFOLDING STANDARDS IN EXISTING PARTS 1910 AND 1926

Existing 1910		Existing 1926 Subpart L	
.28 (b)	Wood pole scaffolds	.452 (a)	Pole scaffolds.
.28 (c)	Tube and coupler scaffolds	.452 (b)	Tube and coupler scaffolds.
.28 (d)	Tubular welded frame scaffolds	.452 (c)	Fabricated frame (tubular welded) scaffolds.
.28 (e)	Outrigger scaffolds	.452 (i)	Outrigger scaffolds.
.28 (g)	Two-point suspension scaffolds	.452 (p)	Two-point adjustable suspension scaffolds.
.28 (h)	Stone setter's adjustable multipoint suspension scaffolds.	.452 (q)	Multi-point adjustable suspension scaffolds, stone setters' multi-point adjustable suspension scaffolds, and masons' multi-point adjustable suspension scaffolds.
.28 (f)	Masons' adjustable multi-point suspension scaffolds.		
.28 (i)	Single-point adjustable suspension scaffolds	.452 (o)	Single-point adjustable suspension scaffolds.
.28 (j)	Boatswain's chair.		
.28 (k)	Carpenters' bracket scaffolds	.452 (g)	Form scaffolds and carpenters' bracket scaffolds.
.28 (l)	Bricklayers' square scaffolds	.452 (e)	Bricklayers' square scaffolds.
.28 (m)	Horse scaffolds	.452 (f)	Horse scaffolds.
.28 (n)	Needle beam scaffolds	.452 (u)	Needle beam scaffolds.
.28 (o)	Plasterers', decorators', and large area scaffolds	.452 (d)	Plasterers', decorators', and large area scaffolds.
.28 (p)	Interior hung scaffolds	.452 (t)	Interior hung scaffolds.
.28 (q)	Ladder jack scaffolds	.452 (k)	Ladder jack scaffolds.
.28 (r)	Window-jack scaffolds	.452 (l)	Window-jack scaffolds.
.28 (s)	Roofing bracket scaffolds	.452 (h)	Roof bracket scaffolds.
.28 (t)	Crawling boards or chicken ladders	.452 (m)	Crawling boards (chicken ladders).
.28 (u)	Float or ship scaffolds	.452 (s)	Float (ship) scaffolds.
.29 (e)	Mobile work platforms	.452 (w)	Mobile scaffolds.

OSHA is aware that by requiring general industry employers to comply with the construction industry scaffold requirements, some employers may encounter new requirements. However, the Agency anticipates there will be minimal new compliance burdens or new costs associated with requiring compliance with the construction industry rules. The Agency believes that any requirements in the construction industry scaffold standard that would be "new" to general industry employers are requirements that only apply when construction work is being done. For example, § 1926.451(g)(2) requires, under certain conditions, that employees be protected from falls while erecting and dismantling supported scaffolds. There is no similar requirement in the existing general industry scaffold standard. However, OSHA believes that most work performed from supported scaffolds is construction work that is already subject to the § 1926.451(g)(2) requirement.

OSHA requests comment on its position as discussed here. Is there general industry work—maintenance work, for example—performed while working from supported scaffolds that would cause employers to be subjected to a new rule? Are there other requirements in the construction industry rule that would impose new obligations on general industry employers because of OSHA's proposed action to require employers to comply with the construction scaffold rule? If so, what are those requirements and how would general industry employers be impacted?

Paragraph (b) Rope descent systems (RDS).

Rope descent systems (RDS), newly covered in proposed paragraph (b), are suspension-type devices that support one employee in a chair (seat board) and allow the user to descend in a controlled manner, stopping at desired points during the descent. RDS are a variation of single-point adjustable suspension scaffolds, but operate only in a descending direction. The use of rope descent systems is prevalent in the United States, frequently used in building cleaning, maintenance, and inspection. RDS are also known as "controlled descent devices" (CDD), and have been referred to as such in previous **Federal Register** notices (*see* example in following paragraph). To reduce confusion, in this notice OSHA will only use the term RDS.

In the July 18, 1990, **Federal Register,** OSHA solicited comments on regulating the use of RDS (CDD). On May 2, 2003, OSHA again raised the issue (68 FR 23534):

> In a March 12, 1991, memorandum to its Regional Administrators, OSHA stated that employers who use CDD to perform building cleaning, inspection, and maintenance must do so in accordance with the manufacturer's instructions, warnings, and design limitations. In addition, OSHA said it expected employers using CDD to implement eight specific safety provisions covering the following areas: employee training, inspection of equipment, proper rigging, separate fall arrest systems, installation of lines, rescue, prevention of rope damage, and stabilization (Docket S–029; Ex. 1–16–3). These eight provisions also are included in the current national consensus standard, ANSI I–14.1–2001—Window Cleaning Safety (Docket S–029; Ex. 1–13). The ANSI standard also limits the use of CDD, which it refers to as rope descent systems (RDS) to window cleaning operations performed 300 feet (91 m) or less above grade, unless the windows cannot be safely and practicably accessed by other means such as powered platforms.

The inclusion of these eight provisions in the ANSI standard on window cleaning indicates industry acceptance of these specific safety precautions. Comments to the earlier rulemaking record, both written and in public hearings, indicate that there are basically two view points on the RDS issue—either strongly in support of their use or strongly opposed to their use.

The supporting comments noted that RDS are a vital piece of equipment for the window cleaning industry (along with powered platforms, ladders, and other devices). Comments were made that, in some instances, such as certain multi-level roofs, saw-tooth roof edges, and buildings without parapets, RDS were the safest equipment to use (Ex. OSHA–S041–2006–0666–1253, p. 489).

Mr. Steve Powers, an owner/operator of a high-rise window cleaning company testified:

> [T]he only solution to reducing the number of injuries and fatalities is in proper training, not in banning or restricting equipment. Human error and the lack of proper training is the primary cause of injuries and fatalities in our industry, not the equipment (Tr. 685).

The opposing commenters discussed the advantages of powered platforms over RDS. A window cleaning company owner expressed the belief that most window cleaners in this country do not have the proper training to use RDS in a safe manner (Ex. OSHA–S041–2006–0666–1254, p. 997). Many members of the Service Employees International Union (SEIU) also opposed the use of RDS (*e.g.,* Ex. OSHA–S029–2006–0662–0277 through Ex. OSHA–S029–2006–0662–0284).

Since issuing its policy on the use of RDS over 19 years ago, OSHA is not aware of any fatalities involving RDS when all eight of the safety provisions outlined in the March 12, 1991, memorandum have been followed. Therefore, at this time, OSHA believes that RDS may address a need and can be used safely so long as proper procedures are followed. Due to the design of some structures, the use of RDS may be the only way to perform some maintenance work and, if RDS is the only feasible method, OSHA believes that requirements are essential to protect employees while they are using this equipment.

To have the most complete information on RDS incidents, OSHA requests comment on incidents, including fatalities, injuries, and near misses, that have occurred while using this equipment. Additionally, OSHA requests information regarding any other provisions that should be included in the final rule to increase worker safety, including whether or not RDS should be prohibited or should be allowed only when the employer can demonstrate that other methods, such as powered platforms, are not feasible or pose additional safety risks. Please include comment on how such feasibility and safety risk determinations could be made, as well as applicable rationale, costs, and benefits for all comments on RDS.

The specific requirements in this proposed rule are based on the eight provisions of OSHA's 1991 memorandum and the national consensus standard, IWCA I–14.1–2001. These provisions are described in the following paragraphs. Additionally, although some provisions of this section are essentially the same as provisions in proposed subpart I, OSHA believes it is appropriate for the provisions to be presented here, in proposed subpart D, as a complete unit for ease of compliance and enforcement.

Proposed paragraph (b)(1) prohibits the use of RDS at heights greater than 300 feet (91.4 m) above grade unless the employer can demonstrate that access cannot otherwise be attained safely and practicably. Therefore, RDS would be permitted at heights of 300 feet (91.4 m) or less.

While the March 12, 1991, memorandum did not include a 300-foot limitation, the national consensus standard, IWCA I–14.1–2001 (section 5.7.12), prescribes the limitation. OSHA uses IWCA I–14 (section 5.7.11) as the basis for this prohibition, noting that the greater the length of rope used for a descent, the greater the adverse effects of environmental factors such as wind gusts, microbursts, or tunneling wind currents; these effects increase the risk

of injury to employees. For this reason, OSHA believes it is appropriate to propose this prohibition.

Proposed paragraph (b)(2) establishes eleven requirements employers must meet when RDS are used. Proposed paragraph (b)(2)(i) requires RDS to be used in accordance with the instructions, warnings, and design limitations set by manufacturers and distributors. Equipment is to be used only as the manufacturer designed it to be used. For instance, ropes and equipment that are designed and sold for recreational climbing are not always rated for industrial use. OSHA is aware that some elements of one manufacturer's system may be compatible with elements of a different manufacturer's system; however, incompatibility of systems can be disastrous. OSHA requests comment on whether changing the provision to read "set by manufacturers or qualified persons" (using the word "qualified" as defined in proposed § 1910.21) would be more appropriate.

Proposed paragraph (b)(2)(ii) requires employee training in accordance with proposed § 1910.30. OSHA believes that RDS can be safely used only if employees are thoroughly knowledgeable in the equipment and its proper use. Please *see* the training discussion below.

Proposed paragraph (b)(2)(iii) requires daily inspection of all equipment used in RDS before use. Also, any damaged equipment must be removed from service. This inspection enables changes and defects (such as abrasions and cracks) that occurred during the last use or during storage to be discovered, and appropriate action taken. This provision is reflected in a similar requirement in proposed § 1910.140, Personal fall arrest systems.

Proposed paragraph (b)(2)(iv) requires proper rigging, including sound anchorages and tiebacks, with particular emphasis on providing tiebacks when counterweights, cornice hooks, or similar non-permanent anchorages are used. Sound anchorage and tiebacks are essential to the safety of RDS. Emphasis is placed upon non-permanent anchorages because of the increased possibility of damage during transport and improper installation. The Agency requests comment on whether this provision is sufficient to ensure the safety of anchorages, and whether OSHA should include any specific requirements for anchorages beyond those presented here.

Proposed paragraph (b)(2)(v) requires a separate, independent personal fall arrest system meeting the requirements of subpart I of this part to be used so that any failure in a friction device, support seat, support line, or anchorage system will not affect the ability of the fall arrest system to operate and quickly stop the employee's fall. This requirement is consistent with existing § 1910.66(j) and § 1926.451(g), and is reflected in proposed § 1910.140.

Proposed paragraph (b)(2)(vi) requires that all lines be capable of sustaining a minimum tensile load of 5,000 pounds (2,268 kg). This requirement does not preclude the use of a knot, swage, or eye splice that reduces the tensile strength of a rope, but it does require that when such a knot, swage, or splice is used, the rope must have a resulting strength capable of supporting a minimum tensile load of 5,000 pounds (2,268 kg). This provision is the same as a requirement in proposed § 1910.140, Personal fall arrest systems.

Proposed paragraph (b)(2)(vii) requires the employer to provide for prompt rescue of employees in the event of a fall. This provision is the same as a requirement in proposed § 1910.140.

Proposed paragraph (b)(2)(viii) requires ropes to be effectively padded when they contact edges of the building, anchorage, obstructions, or other surfaces that might cut or weaken the rope. Padding protects ropes from abrasions that can weaken the tensile strength of a rope.

Proposed paragraph (b)(2)(ix) requires stabilization at employee work locations when descents are greater than 130 feet (39.6 m). As required in ANSI/IWCA I–14 (section 5.7.12), stabilization at the specific work station reduces risks imposed by sway. The Agency requests information on stabilization methods commonly used, and other stabilization methods not commonly used that may increase employee safety. Please include information regarding costs and benefits of these methods.

The greater the length of rope used for a descent, the greater the adverse effects of environmental factors such as wind gusts, microbursts, or tunneling wind currents; these effects increase the risk of injury to employees. OSHA requests information on the use of RDS during inclement weather. Should the use of RDS be prohibited in certain weather conditions? If so, what are those conditions? How should an employer determine whether the conditions are severe enough to prevent the use of RDS? The term "excessive winds" as used in the consensus standard is subjective and open to differing interpretations. How should the term be defined? Is a specific wind speed appropriate? What speed and why? Should wind speed be monitored, and if so, how?

Proposed paragraph (b)(2)(x) requires equipment, including tools, squeegees, and buckets, to be secured to prevent equipment from falling, thus protecting any workers below from being struck by falling equipment. This provision is based on IWCA I–14.1–2001, which is written for the protection of the general public. However, OSHA believes this provision also is necessary to protect employees working below RDS from injuries resulting from dropped equipment.

Proposed paragraph (b)(2)(xi) requires suspension ropes to be protected from exposure to open flames, hot work, corrosive chemicals, or other destructive conditions that can weaken them. This requirement is essentially the same as existing § 1910.28(a)(21).

Section 1910.28 Duty To Have Fall Protection

This is the first of three new sections in subpart D that consolidate requirements pertinent to fall protection. The new sections (§§ 1910.28, 1910.29, and 1910.30), when viewed together, represent a comprehensive approach to managing fall hazards. OSHA believes this revised approach will ensure a better understanding of employer obligations; provide flexibility for employers when choosing a fall protection system that works best for them; and most importantly, will significantly reduce the number of falls in general industry.

Proposed § 1910.28 specifies the areas and operations where fall protection systems are required. The criteria to be met for fall protection systems and the training necessary to use the systems properly are covered in proposed §§ 1910.29 and 1910.30, respectively. In addition, criteria to be met when *personal* fall protection systems are used are covered in subpart I of this part at § 1910.140. New § 1910.28 is patterned after § 1926.501, Duty to have fall protection, of the construction industry standards and contains many similar requirements. As indicated in proposed § 1910.21, Scope and application, OSHA intends that this new section will consolidate most general industry fall protection requirements. There are, however, some exceptions. OSHA is not proposing to relocate the existing "duty to have fall protection" requirements in § 1910.66 (for powered platforms), § 1910.67 (for aerial lifts), § 1910.268 (for telecommunications operations), or § 1910.269 (electric power generation, distribution and transmission operations). In addition, nothing in this section applies to fall hazards from the perimeter of entertainment stages or rail

(subway) station platforms. In these contexts, the use of guardrails or other fall protection systems could unreasonably interfere with work operations or would create a greater hazard than would otherwise be present. OSHA recognizes that there may be limited circumstances where fall protection may be feasible in these occupational settings, and encourages the use of fall protection when possible.

The duty to have fall protection in general industry is not new. Existing subpart D already requires employees to be protected from falls and, in general, requires that protection be provided whenever an employee is exposed to falling 4 feet (1.2 m) or more to a lower level. The origin of the 4-foot rule in subpart D is the American National Standard, ANSI A12.1–1967, Safety Requirements for Floor and Wall Openings, Railings, and Toe Boards. Historical records indicate that, generally, the 4-foot rule was prescribed in consensus standards as far back as 1932 (*see* ANSI A12.1–1932). Therefore, it is reasonable to conclude that providing fall protection when employees are exposed to falls of 4 feet (1.2 m) or more has been the accepted practice in general industry for more than 75 years.

Furthermore, a 1978 University of Michigan study (*An Ergonomic Basis for Recommendations Pertaining to Specific Sections of OSHA Standard 29 CFR Part 1910, Subpart D-Walking and Working Surfaces,* Ex. OSHA–S041–2006–0666–0004) supports maintaining the 4-foot rule. For these reasons, OSHA believes it would be unreasonable to change this trigger height. The Agency requests more recent studies or information that support or contradict this position.

OSHA notes that its construction industry rules require, except for certain specific work or operations, that employees be protected whenever the fall distance is 6 feet (1.8 m) or more to lower levels. Comments to OSHA's 2003 Reopening Notice indicated that some members of the public believed that the trigger height for providing fall protection in general industry is 6 feet (1.8 m), which is the construction industry trigger. OSHA wishes to be clear on this point: for general industry, the trigger height for providing fall protection has—for more than 75 years—been 4 feet (1.2 m). Exceptional trigger heights have been established for construction, work performed on scaffolds or fixed ladders, or utility work. Throughout its entire history, OSHA has consistently reinforced the policy in public statements, as well as in documents issued to clarify and interpret the standard. For example, as far back as 1978, OSHA, in a letter of interpretation to Mr. John Reilly (*http://www.osha.gov/pls/oshaweb/owadisp.show_document?p_table=INTERPRETATIONS&p_id=18715*) restated the requirement for fall protection for open-sided surfaces more than 4 feet above adjacent levels.

A major difference between the proposed requirements in § 1910.28, and the existing requirements of subpart D, is that under the proposed rule, employers will be able to choose from several options in providing fall protection. The existing rule, for the most part, mandates the use of guardrail systems (*see, e.g.,* § 1910.23), thereby limiting the employer's ability to choose the system that works best for the particular situation or work activity. The proposed rule allows employers to choose from several options in providing fall protection. These include conventional fall protection systems such as guardrail systems, safety net systems, and personal fall protection systems (travel restraint systems, fall arrest systems, and positioning systems), and non-conventional means. An example of non-conventional means would be the establishment of a designated area in which an employee is to work. An employee working in a designated area must be trained in safe work practices specific to that area and must be required to use those safe work practices. OSHA believes that an important key to protecting employees is allowing employers flexibility to select the fall protection systems or methods that will work best for the particular work activities or operations, thereby allowing employers to consider factors such as exposure time, availability of attachment points, and feasibility and cost constraints.

OSHA believes that the reorganized format presented here will reduce confusion about fall protection requirements, as well as reduce the need for interpretations of those requirements. As noted above, by patterning this section after the construction industry standards, OSHA intends to ensure that employees in both industries, when exposed to similar fall hazards, are afforded similar protection. The proposed subpart D fall protection requirements also reflect today's technology and recognize the use of innovative fall protection measures, such as working in designated areas or using travel restraint systems, as reasonable and appropriate ways to protect employees from fall hazards. Once an employer has chosen a system or method from the options allowed in proposed § 1910.28, that system/method would have to meet the requirements in proposed § 1910.29, and employees would have to be trained on the use of the chosen system per proposed § 1910.30. OSHA believes the proposed fall protection requirements will allow for a much higher level of compliance, leading to a higher level of protection and may, at the same time, reduce employer costs.

Paragraph (a) General

Proposed paragraph (a) of § 1910.28 contains two general requirements relating to an employer's obligation, or duty, to have fall protection. In proposed paragraph (a)(1), OSHA establishes the employer's obligation to provide fall protection and clarifies that all fall protection systems used must conform to the criteria and work practices set forth in proposed § 1910.29, except that, when personal fall protection systems are used, compliance with the criteria and work practices of proposed § 1910.140 in subpart I would be required. Proposed § 1910.28 does not apply to powered platforms because the duty to have fall protection is already provided in § 1910.66, the general industry standard for powered platforms. Proposed § 1910.28 also does not apply to aerial lifts (§ 1910.67), telecommunications (§ 1910.268), or electric power generation, transmission, and distribution (§ 1910.269) because each of these sections, like § 1910.66, already contains a requirement specifying the employer's duty to have fall protection. OSHA notes that most of the requirements in this proposed section allow several choices for providing fall protection, but some requirements limit the choices. For example, only the use of guardrail and handrail systems is permitted to protect employees on dockboards (bridge plates). Here, OSHA believes these systems offer the appropriate type of fall protection.

As stated above, existing subpart D requires employers to provide guardrails as the primary method of protecting employees from fall hazards (for example, *see* proposed § 1910.23(c)). The 1990 proposed revision of subpart D (55 FR 13401) continued the concept of using guardrails as the primary fall protection method, allowing other alternatives in limited situations. Thus, the subpart D proposal established a hierarchy of controls. However, in the 2003 Reopening Notice (68 FR 23533), OSHA acknowledged that it may not always be feasible to provide guardrails and raised this as an issue. Issue #4, Hierarchy of Fall Protection Controls, elicited comment on whether OSHA should permit employers to provide

other fall protection systems such as personal fall arrest systems, positioning systems, or restraint systems to protect employees from falls. In raising the issue, OSHA noted that the final Fall Protection rule for the construction industry did not have a hierarchy of fall protection systems. Instead, that standard included a list of options which employers would be permitted to follow (59 FR 40672, August 9, 1994). In the 2003 reopening, OSHA said that, to achieve consistency between OSHA's construction standards and general industry standards, it could abandon the hierarchy of fall protection controls that had been proposed in 1990 in favor of a more flexible approach (68 FR 23533).

Comments on Issue #4 overwhelmingly favored removal of the hierarchy and promulgation of rules consistent with those already established for the construction industry. Today's proposal reflects those comments and removes the hierarchy in favor of provisions establishing several fall protection systems that offer equivalent protections, and allows employers flexibility to select among them. It is OSHA's belief that the alternatives (or options) listed for each work activity operation will allow employers to choose the system that they determine is most appropriate and cost effective. OSHA has limited the employer's choices to those systems that it believes will provide an appropriate and equal level of safety.

In an earlier **Federal Register** (59 FR 40680) document, OSHA discussed its position that all employers are responsible for obtaining information about the workplace hazards to which their employees may be exposed and for taking appropriate action to protect affected employees from any such hazards. OSHA also noted that "[t]he [Occupational Safety and Health Review] Commission has held that an employer must make a reasonable effort to anticipate particular hazards to which its employees may be exposed in the course of their scheduled work." (*Id.* 40680.) Specifically, an employer must inspect the area to determine what hazards exist or may arise during the work before permitting employees to work in that area, and the employer must then give specific and appropriate instructions to prevent exposure to unsafe conditions. This is particularly important when employees are allowed to work in a "designated area" and are not protected by conventional fall protection systems.

Additionally, when general industry employers contract with others to provide work at their site, OSHA expects both the host employer and contract employer to work together to identify and address fall hazards. One method of accomplishing this is to conduct a hazard assessment following the guidelines in Appendix B to subpart I of part 1910, Non-Mandatory Compliance Guidelines for Hazard Assessment and Personal Protective Equipment Selection. Another resource is consensus standards. ANSI/ASSE Z359.2–2007, Minimum Requirements for a Comprehensive Managed Fall Protection Program, provides procedures for eliminating and controlling fall hazards. OSHA, of course, encourages employers to go beyond its minimum requirements and to take additional measures to address fall hazards in a comprehensive manner, starting with a discussion about the elimination of fall hazards and ending with a plan to rescue employees if they fall.

In this proposed rule, OSHA requires employers to protect employees performing work from fall hazards, and sets criteria for the proper implementation of fall protection through the requirements in subparts D and I, specifically in the requirements at §§ 1910.28–1910.30 and § 1910.140.

In paragraph (a)(2), OSHA proposes to require that employers ensure that any walking-working surface on which they allow employees to work has the strength and structural integrity to support employees safely. OSHA is proposing to add this new requirement, which is identical to § 1926.501(a)(2) of the construction fall protection standard, to ensure that the surfaces can support the weight of employees, equipment, and materials. OSHA's intent is that a simple inspection of the work surface be made before work begins. If conditions warrant, a more involved inspection will be necessary to ensure the surface is safe for employees. OSHA is aware of incidents when employees have fallen through floors or roofs because they were not inspected before the work began to ensure that the surfaces would support the loads imposed (employees, equipment, and material). OSHA believes this is particularly true when employees are doing maintenance and servicing work of equipment on roofs, platforms, and runways. The hazards addressed by the proposed provision are similar to the hazards addressed in proposed § 1910.22, a revision of existing § 1910.22(d), which is concerned with ensuring employees work on surfaces that can support them so they will not fall onto or through the walking-working surface. The provision in proposed § 1910.28(a)(2), while similar to proposed § 1910.22(a) (which requires that surfaces be designed, constructed, and maintained free of hazards), is intended to focus the attention of the employer on the need to inspect work surfaces (especially non-routine work surfaces) before employees are required to walk or work on them. It is noted that while some surfaces are not specifically designed as a walking or working surface, employees walk on or work from them from time to time. OSHA believes that this approach is consistent with the approach described in the preamble to the construction rule (59 FR 40681).

Paragraph (b) Protection From Fall Hazards

Proposed paragraph (b) contains 13 requirements that set forth the options from which employers may choose to protect employees exposed to fall hazards when on a walking-working surface, as defined in proposed § 1910.21. OSHA is using the term "walking-working surfaces" instead of the existing term "floor" to indicate clearly that subpart D addresses all surfaces where employees perform work. The Agency has always maintained that the OSHA general industry fall protection standards cover all walking-working surfaces. In fact, although OSHA never mentioned the term "roof" in the existing rule, it has consistently held that falls from roofs are covered by the existing rule. OSHA notes that the consensus standards on which the original fall protection requirements were based, ANSI A12.1 and A64, now combined at ANSI A1264.1, includes the term "roof" in its title. The revised rule reaffirms the existing Agency interpretation and practice and clarifies the language of the standards in that regard. Also, OSHA has consistently held that subpart D addresses the hazards of falling from a walking-working surface to any kind of lower level (*e.g.,* solid, liquid, or colloid).

Under paragraph (b) of the proposal, employers are required to select and use a fall protection system (or combination of systems) as provided by paragraphs (b)(1) through (b)(14). Each individual paragraph addresses the fall protection needs of particular walking-working surfaces and lists the fall protection systems that OSHA believes are appropriate to those surfaces. Only the systems listed are permitted to be used. The revised rule requires essentially the same coverage as the existing rule—protection of employees from falls of 4 feet or more to lower levels, with a few exceptions. One exception is when employees are working over dangerous equipment (*see* proposed paragraph

(b)(6) below). In that situation, employees must be protected from falls regardless of the height. On the other hand, when employees are working on scaffolds or fixed ladders, it is reasonable to allow a higher trigger height, hence the 10- and 24-foot (3 and 7.3 m) trigger heights proposed. Also, as mentioned above, the proposed general industry fall protection standards have been reorganized and formatted to be similar to the construction industry fall protection rule to bring consistency to the two rules.

Proposed paragraph (b)(1) sets forth the requirements for fall protection from unprotected sides and edges of walking-working surfaces. It provides that employees must be protected when they are exposed to falls from unprotected sides and edges of walking-working surfaces which are 4 feet (1.2 m) or more above lower levels. The options from which an employer can choose to provide this protection include both conventional systems—guardrail systems, safety net systems, personal fall protection systems, and travel restraint systems—and having employees work in a "designated area." OSHA defines a "designated area" in proposed § 1910.21(b) as a distinct portion of a walking-working surface delineated by a perimeter warning line in which *temporary* work may be performed without additional fall protection. A "designated area" is similar to a "controlled access zone" at construction worksites. Except for the "designated area" option, the proposed requirements are essentially the same as the existing general industry requirements in § 1910.23(c) and are similar to the construction standard at § 1926.501(b)(1).

This proposed standard does not specify a distance from the edge that is considered safe, *i.e.,* a distance at which fall protection is not required. Instead, it allows the employer to designate an area in which employees can work without fall protection. The criteria for designated areas and other fall protection systems are set forth in proposed § 1910.29. It is essential for authorized employees in designated areas exposed to fall hazards to be trained in accordance with provisions set forth in § 1910.30.

An exception to proposed paragraph (b)(1) applies to the unprotected side or edge of the *working side* of platforms used in slaughtering facilities, loading racks, loading docks, and teeming tables used in molten metal work. The exception states that when the employer demonstrates that use of guardrails on the working side of these platforms is infeasible, the work may be done without guardrails provided: (1) The work operation for which guardrails are infeasible is in process; (2) access to the platform is limited to authorized employees; and, (3) the authorized employees have been trained in accordance with proposed § 1910.30. Note that the exception is only for that part of the guardrail that would normally be installed on the *working side* of the platform. Employees must still be protected from falls from the other sides and edges of the platform. When work operations for which guardrails are infeasible are not in process, for example, during cleaning or maintenance, the exception does not apply. This is because OSHA is aware that, in some cases, work cannot be done when access is blocked by guardrails, or the guardrails touch carcasses and pose a health issue. These situations are not present during cleaning or maintenance. The Agency requests comment regarding the technological feasibility of requiring other means of fall protection (*e.g.,* travel restraint systems) in these applications. Please include supporting rationale, as well as information on the costs and benefits of such a provision.

Paragraph (b)(2) proposes fall protection requirements for employees in hoist areas of walking-working surfaces that are 4 feet (1.2 m) or more above lower levels. Employees must be protected through the use of guardrail systems, personal fall arrest systems, or travel restraint systems. If guardrails (or chains or gates if they are being used in lieu of guardrails at the hoist area) are removed to facilitate hoisting operations, then employees who lean through the access opening or out over the edge of the access opening to perform their duties are at risk and must be protected by the use of personal fall arrest systems. The proposed requirement is consistent with the existing general industry standard in § 1910.23(b)(1)(i). Except that the trigger height for providing fall protection is 4 feet (1.2 m) in the proposed general industry rule, the proposed requirement is also consistent with the construction industry standard at 1926.501(b)(3). The existing subpart D standard does not address fall protection at hoist areas separately from other holes and wall openings. In this proposal, holes are addressed in paragraph (b)(3) and wall openings in paragraph (b)(7) below. The criteria for grab handles are located at proposed § 1910.29(l).

Paragraph (b)(3) of this proposed rule requires that employees be protected from hazards associated with holes. Employees may be injured or killed if they step into holes, trip when caught in holes, fall through holes, or are hit by objects falling through holes. Some workplaces may present all of these hazards while others may have fewer. The proposed rule specifies protective measures applicable to each hazard.

Proposed paragraph (b)(3)(i) requires that employees be protected from falling into or through holes (including skylight openings) 4 feet (1.2 m) or more above lower levels by covers over the hole, erecting a guardrail system around the hole, or by the use of a personal fall arrest system. Proposed paragraph (b)(3)(ii) requires that covers be used to protect employees from tripping in or stepping into holes, and proposed paragraph (b)(3)(iii) requires that covers be used to protect employees from objects falling through overhead holes. The proposed requirements are essentially the same as those in existing general industry standards at § 1910.23(a)(4), (a)(8), and (a)(9), and the construction standard at § 1926.501(b)(4) except that the trigger height for providing fall protection for employees falling through holes is 4 feet (1.2 m) in the proposed general industry rule.

Proposed paragraph (b)(4) addresses fall protection from dockboards (bridge plates). Proposed paragraph (b)(4)(i) states that each employee on a dockboard (bridge plate) be protected from falling 4 feet (1.2 m) or more to lower levels by guardrail or handrail systems, except as provided by proposed (b)(4)(ii) of this section. Proposed paragraph (b)(4)(ii) provides that no fall protection (guardrail or handrail system) is required when motorized equipment is being used on dockboards (bridge plates) solely for material handling operations, provided that: (A) Employees are exposed to fall hazards of less than 10 feet (3 m); and (B) employees have been trained as provided by proposed § 1910.30. The proposed provision, in permitting employers to rely on training rather than on the use of conventional fall protection systems, is consistent with the proposed requirements for repair pits and assembly pits in § 1910.28(b)(8). An example of when this situation might occur would be the transfer of material between boxcars. Materials handling exposure is generally of limited duration, and requires ready access to the open sides. Guardrails would interfere with the transfer and could create a greater hazard to employees. The 10-foot (3 m) limitation in proposed paragraph § 1910.28(b)(4)(ii)(A) is consistent with similar requirements for work on elevated surfaces such as scaffolds (*see* proposed §§ 1910.27, and 1926.451(g)).

Additional requirements related to positioning and securing ramps and bridging devices are found in proposed § 1910.26, Dockboards (bridge plates).

In paragraph (b)(5), OSHA proposes that employees on runways and similar walkways be protected from falling 4 feet (1.2 m) or more to lower levels by guardrails. The proposed paragraph is essentially the same as existing § 1910.23(c)(1) and (2) and is consistent with the construction standard at § 1926.501(b)(6), except that the trigger height for providing fall protection is 4 feet (1.2 m) in the proposed general industry rule.

An exception to proposed paragraph (b)(5) permits runways used for special purposes (such as filling tank cars) to have the railing on one side omitted when the employer demonstrates that operating conditions necessitate such an omission. In these circumstances, the employer must minimize the fall hazard by providing a runway that is at least 18 inches (46 cm) wide, and providing employees with, and ensuring the proper use of, personal fall arrest systems or travel restraint systems. This proposed exception is consistent with ANSI 1264.1–2007. The Agency invites comment on current practices involving runways that are used for special purposes. Where are such runways used and how are employees who work on them protected?

Proposed paragraph (b)(6) addresses dangerous equipment. It proposes two requirements to protect employees from falling into or onto dangerous equipment. Examples of dangerous equipment include protruding objects, machinery, pickling or galvanizing tanks, degreasing units, or similar equipment. Proposed paragraph (b)(6)(i) addresses situations where employees are less than 4 feet (1.2 m) above dangerous equipment, and it requires that employees be protected by the use of guardrail systems or travel restraint systems unless the equipment is covered or otherwise guarded to eliminate the hazard. Proposed paragraph (b)(6)(ii) addresses situations where employees are more than 4 feet above dangerous equipment, and it requires employees to be protected by guardrail systems, safety net systems, personal fall arrest systems, or travel restraint systems. OSHA is proposing different methods for protecting employees depending on the fall distance. The Agency does not believe the use of safety net systems or personal fall arrest systems that meet the requirements of proposed § 1910.29 are appropriate when the fall distance is less than 4 feet (1.2 m), since there will not be sufficient distance below the employee for the system to work and the employee could make contact with the dangerous equipment. The proposed paragraph is essentially the same as the existing general industry standard at § 1910.23(c)(3) and the construction standard at § 1926.501(b)(8), except that the trigger height for providing fall protection is 4 feet (1.2 m) in both the proposed and existing general industry rules.

Paragraph (b)(7) proposes to require protection for employees who are exposed to the hazard of falling out or through wall openings. Under the proposal, wall openings (defined as a gap or void 30 inches (76 cm) or more high and 18 inches (46 cm) or more wide in any wall or partition through which employees can fall to a lower level) must be equipped with a guardrail system, safety net system, travel restraint system, or personal fall arrest system. OSHA believes the most practical method of compliance is the guardrail system because it provides protection at all times and for all employees who may have exposure at the wall opening. However, there may be cases where employers choose to use safety net systems, travel restraint systems, or personal fall arrest systems, which also will provide an appropriate level of protection. For that reason the provision has been written to permit the use of these other systems. This provision is essentially the same as the existing general industry standard at § 1910.23(b) and also with the construction industry rule for wall openings found in § 1926.501(b)(14), except that the trigger height for fall protection is 4 feet (1.2 m) in both the proposed and existing general industry rules.

The earlier (1990) proposed revision of subpart D proposed that in addition to providing conventional fall protection, employers also install grab handles on each side of the wall opening whenever the work activity required employees to reach through an unprotected opening. That requirement was based on existing § 1910.23(b)(1)(i) and (e)(10). OSHA is not including a requirement for grab handles at wall openings in this proposal because, unlike the 1990 proposal, this document contains a separate, specific requirement (*see* proposed paragraph (b)(2) above) for hoist areas, which includes a requirement to install grab handles. OSHA is not including the requirement for grab handles for all wall openings because OSHA intends that, when employees lean out and through a wall opening, that opening constitutes a "hoist area" and the requirements of proposed paragraph (b)(2) apply. The use of grab handles as a handhold is, of course, permitted at wall openings.

Proposed paragraph (b)(8) is a new provision, proposed to address the specific fall hazard created by vehicle repair pits and assembly pits. These pits are designed to provide employee access to the underside of a vehicle without elevating the vehicle. Typically, a vehicle is driven over the pit and the employee enters the pit via a flight of stairs. The employee then performs work on the underside of the vehicle.

OSHA currently requires fall protection for these pits, and has addressed their hazards through section 5(a)(1) (the general duty clause) of the OSH Act. This proposal sets out specific requirements to address this fall hazard. Under the proposal, employees exposed to falling a distance between 4 and 10 feet (1.2 and 3 m) into a vehicle repair pit need not be protected as required in proposed § 1910.28(b)(1) for unprotected sides and edges, provided the employer institutes the three specific work practices that OSHA believes will provide an appropriate level of protection. The option to use work practices is being proposed in recognition that repair and assembly pits present a unique problem in terms of striking a balance between protecting employees from falls and ensuring that the employees can reach the work area and perform their work. Conventional fall protection systems may not always be the most appropriate way to protect employees. For example, the use of guardrails for perimeter protection could interfere with driving vehicles over, or away from, the pit. Likewise, the use of personal fall arrest or travel restraint systems might prevent employees from reaching the area where the work needs to be performed. Further, once a vehicle is placed over the pit, the fall hazard is normally eliminated. The primary fall hazard to employees exists when there is no vehicle over the pit, but it is OSHA's understanding that employees are unlikely to be in the vicinity of a repair pit when there is no vehicle over the pit.

OSHA believes that adequate fall protection for employees can be provided by the methods proposed in paragraph (b)(8). Access to the edge (within 6 feet (1.8 m)) of the pit must be limited to trained, authorized employees (proposed (b)(8)(i)); the floor must be marked (proposed (b)(8)(ii)) to designate the unprotected area; and caution signs must be posted to warn employees of the unprotected area (proposed (b)(8)(iii)). OSHA believes such a well-marked designated area, extending back 6 feet (1.8 m) from the rim of the pit, provides sufficient early

warning to employees to protect them from unexpectedly falling into the pit. The use of caution signs that effectively notify employees of the presence of the fall hazard would restrict the area to authorized employees and would further limit employee exposure to the open perimeter. This provision only applies to pits less than 10 feet (3 m) deep; however, where employees are exposed to falling 10 feet (3 m) or more into a pit, conventional fall protection in accord with proposed paragraph (b)(1) must be used. OSHA notes that caution signs must meet the requirements of § 1910.145.

In proposed paragraph (b)(9), OSHA addresses fall hazards related to fixed ladders. Under the proposed standard, no fall protection is required when employees are exposed to falls from fixed ladders of less than 24 feet (7.3 m). Proposed paragraph (b)(9)(i) requires that fixed ladders be provided with cages, wells, ladder safety systems, or personal fall protection systems where the length of the climb is less than 24 feet (7.3 m) but the top of the ladder is more than 24 feet (7.3 m) above lower levels. Proposed paragraph (b)(9)(ii) addresses fall hazards where the total length of a climb equals or exceeds 24 feet (7.3 m). In the latter situation, additional measures also apply when cages, wells, ladder safety systems, or personal fall protection systems are used. If an employer chooses a personal fall protection system, rest platforms must be installed at intervals no greater than 150 feet (45.7 m). If the employer chooses a cage or well, no ladder sections may exceed 50 feet (15.2 m) in length, and each section must be offset from adjacent sections with landing platforms at maximum intervals of 50 feet (15.2 m). If an employer chooses a ladder safety system, no additional measures are proposed.

The existing standard imposes similar requirements but provides fewer fall protection options. Section 1910.27(d)(1)(ii) requires that either cages or wells be provided "on ladders of more than 20 feet to a maximum unbroken length of 30 feet," and § 1910.27(d)(2) requires landing platforms at 30-foot (9.1 m) intervals. This language, which is based on a 1956 ANSI standard that OSHA adopted in 1971, has widely been understood to mean that fall protection is required whenever the length of climb is 20 feet (6.1 m) or more. The proposed revision is consistent with the national consensus standard for fixed ladders, ANSI A14.3–2002. Additionally, as a matter of enforcement policy, OSHA has been allowing the use of other fall protection systems such as those proposed herein. Thus, the proposed requirement represents current industry practice. The proposed requirements are also identical to the construction industry standard at §§ 1926.1053(a)(18) and (19).

In proposed paragraph (b)(10), OSHA addresses fall hazards in the outdoor advertising industry. In this industry, employees often climb both portable and fixed ladders to reach their destination on the advertising billboard platform. OSHA is proposing seven provisions that take into consideration the unique nature of the work wherein both types of ladders are often used, with the portable ladder being used to reach the fixed ladder. The requirements proposed in paragraph (b)(10) are more flexible than those of proposed paragraph (b)(9) for fixed ladders in that (1) the trigger height for fall protection differs for employees engaged in outdoor advertising work and, (2) the method of fall protection differs. The proposed requirements reflect a policy that OSHA instituted for outdoor advertising work in 1991.

Specifically, on March 1, 1991 (56 FR 8801), OSHA granted a variance to one outdoor advertising employer, and later expanded this policy to apply to all outdoor advertising employers. The policy allowed some climbing activities to be performed without any conventional fall protection (wells, cages, ladder safety systems), provided that employees had received specific training *and* that certain work practices (for example, wearing a rest lanyard) were followed. If the employee's climb was above 50 feet (15.2 m), however, additional requirements applied. These requirements apply only where employees are engaged in climbing ladders to reach a billboard platform. Once the employees reach the platform (that is, they are no longer climbing a ladder), conventional fall protection is required with no exceptions. The seven proposed requirements are listed in the following paragraphs.

Proposed paragraph (b)(10)(i) would apply whenever the length of the climb is 50 feet (15.2 m) or less or where the total fall distance does not exceed 65 feet (19.8 m) above grade. In this situation, OSHA proposes that each employee who climbs a combination of a portable and a fixed ladder must wear a body belt or body harness equipped with an 18 inch (46 cm) rest lanyard that will enable the employee to tie off to the fixed ladder.

In paragraph (b)(10)(ii), OSHA proposes to require that employees who climb a combination of a portable and a fixed ladder where the length of the fixed ladder climb exceeds 50 feet (15.2 m), or where the ladder ascends to heights exceeding 65 feet (19.8 m) from grade, be protected through the installation of a ladder safety system for the entire length of the fixed ladder climb.

Proposed paragraph (b)(10)(iii) would require employers to ensure that each employee who climbs fixed ladders equipped with ladder safety systems use the systems properly and follow appropriate procedures for inspection and maintenance of the systems. In paragraph (b)(10)(iv), OSHA proposes that all ladder safety systems be properly maintained to ensure employee safety. This includes all ladder safety systems, regardless of height or date of installation.

In paragraph (b)(10)(v), OSHA proposes that each employee who routinely climbs fixed ladders must undergo training and demonstrate the physical capacity to perform the necessary climbs safely. These employees must satisfy the criteria for qualified climber found in § 1910.29(h). In the 1990 proposed rulemaking (55 FR 13364–66), OSHA had also proposed to allow the use of a "qualified climber" outside of the outdoor advertising industry. In this proposal, OSHA is limiting the use of qualified climbers to the outdoor advertising (billboard) industry because, over the last 18 years, there has been significant progress in protecting employees generally, and many new, easier-to-use fall protection systems are now readily available. In fact, anecdotal information as well as enforcement experience indicates that there is no reasonable basis for proposing to allow the use of qualified climbers in lieu of conventional fall protection outside of the outdoor advertising industry.

In paragraph (b)(10)(vi), OSHA proposes to require that employees must have both hands free of tools or material when ascending or descending a ladder. This provision is consistent with requirements of the national consensus standards in the ANSI/ALI A14 series on ladders, and with OSHA ladder standards for the construction industry at § 1926.1053. The same provision is also proposed in § 1910.23(b)(13) and will be applicable, in general, to all employees on ladders to ensure that employees keep three points of contact on the ladder at all times while ascending or descending.

In paragraph (b)(10)(vii), OSHA proposes to require that where qualified climbers are used, they must be protected by an appropriate fall protection system upon reaching their work positions.

In paragraph (b)(11), OSHA proposes requirements to protect employees from falling off stairway landings and from stairs. This paragraph addresses fall hazards from both the stairway landing and the exposed sides of the stairway. The requirements are essentially the same as the existing requirements in § 1910.24(h) to protect employees from falls from stairways.

In paragraph (b)(11)(i), OSHA is proposing that each employee exposed to a fall of 4 feet or more to lower levels from an unprotected side or edge of a stairway landing be protected by a stair rail or guardrail system. The proposal is essentially the same as the existing requirement in § 1910.24(h) and the construction industry standard for stairway landings in § 1926.1052(c)(12). Unlike proposed § 1910.28(b)(1) which addresses unprotected sides and edges in general, and allows the use of several systems to protect employees from falls, unprotected sides and edges of stairway landings must have stair rails or guardrails installed. OSHA believes that limiting the fall protection options to stair rails or guardrails is necessary because the other options listed in proposed § 1910.28(b)(1), such as safety net systems or personal fall arrest systems, would not be appropriate at stairway landings where employees are regularly and routinely exposed to falls from the unprotected sides and edges. Stair rail or guardrail systems provide for continuous protection.

In paragraph (b)(11)(ii), OSHA is proposing that employees exposed to falls from stairs having three treads and four or more risers be protected by stair railing systems and hand rails. Included with the proposed provision is a table that sets out the type/number of stair rails and handrails required based on the stair width and configuration of the stairway. An exception to the table is that handrails must be provided on both sides of ship stairs and alternating-tread type stairs. The proposed requirements are essentially the same as existing § 1910.23(d)(1).

In proposed paragraph (b)(12), OSHA establishes requirements to protect employees on scaffolds and rope descent systems from falls. As discussed earlier, OSHA is proposing to remove all the scaffold requirements from the general industry standards and require employers to comply with the construction industry standards for scaffolds. In view of that, OSHA is proposing in paragraph (b)(12)(i) to require that employers protect employees from falls from scaffolds by meeting the requirements for fall protection already set out in the construction industry standards of subpart L, Scaffolds (29 CFR 1926). In general, those requirements provide for fall protection whenever employees are exposed to falls of 10 feet (3 m) or more above lower levels. The existing requirements in subpart D already set the duty to have fall protection from scaffolds at or above 10 feet (3 m) from grade, so effectively there is no change.

In proposed paragraph (b)(12)(ii), OSHA requires that employees using a rope descent system be protected from falling 4 feet (1.2 m) or more to lower levels by a personal fall arrest system meeting the requirements in proposed § 1910.140 of subpart I of this part. OSHA notes that paragraph (c)(3) of proposed § 1910.140 requires that ropes used for fall protection be separate from ropes used to suspend the rope descent system. The principle of using independent fall protection systems is also reflected in § 1926.502(d)(15).

Proposed paragraph (b)(13) is a "catch all" provision applicable to walking-working surfaces not otherwise addressed and is intended to ensure that § 1910.28 covers all fall hazards in general industry. It sets forth clearly that *all* employees exposed to falls of 4 feet (1.2 m) or more to lower levels must be protected by a guardrail system, safety net system, personal fall arrest system, or travel restraint system, except where otherwise provided by proposed § 1910.28 or by fall protection provisions in other subparts of part 1910. This provision is intended to facilitate compliance for employers who do not fit any of the specific categories set by proposed § 1910.28. OSHA used this same approach in its fall protection requirements for the construction industry at § 1926.501(b)(15). The proposed new language expresses the current enforcement practice of the Agency, making it clear that employers must address all fall hazards in the workplace.

Proposed paragraph (b)(14) addresses fall protection for floor holes such as stairway floor holes and ladderways, and is consistent with existing requirements found in § 1910.23(a). Accordingly, as with existing § 1910.23(a) (and ANSI A1264.1–2007, Safety Requirements for Workplace Walking/Working Surfaces and Their Access; Workplace, Floor, Wall and Roof Openings; Stairs and Guardrails Systems), some, but not all, of the provisions in this proposed paragraph require toeboards when using fixed or removable guardrail systems. OSHA requests comment on whether toeboards should be required as a part of the guardrail systems used for all floor holes regulated under this proposed paragraph. If possible, the comments should provide information regarding the need for such a requirement, current industry practice, the effectiveness of toeboards in these situations, and the cost associated with adding this requirement to provisions of this paragraph not proposing to use toeboards.

Proposed paragraph (b)(14)(i) requires stairway floor holes to be guarded by a guardrail system. The railing must be provided on all exposed sides except at the entrance to the stairway. For infrequently used stairways where traffic across the hole prevents the use of a fixed guardrail system (as when located in an aisle), the employer has an option to use a guard that consists of a hinged floor-hole cover of standard strength and construction and a removable guardrail system on all exposed sides except at the entrance to the stairway.

Proposed paragraph (b)(14)(i) differs slightly from existing § 1910.23(a) in that it clarifies that use of a hinged floor-hole cover is an alternative to using fixed guardrail systems, which is only implied in existing § 1910.23(a). The proposed provision also defines the term "infrequently" in a manner that is consistent proposed § 1910.265, which defines the term "routinely" as "on a daily basis." OSHA believes the proposed definition will provide employers with helpful information about when use of a hinged floor-hole cover may be appropriate. With regard to the option to use a hinged floor-opening cover, OSHA requests information and comment on the use of automatically rising railings that come into position with the opening of a load-bearing cover on some infrequently used stairways as specified by the explanatory paragraph E3.1 of ANSI/ASSE A1264.1–2007, Safety Requirements for Workplace Walking/Working Surfaces and Their Access; Workplace, Floor, Wall and Roof Openings; Stairs and Guardrails Systems. The comments should provide, if possible, information regarding the availability of such guardrail systems, the prevalence of their use, the cost of the systems (including installation), and the protection such systems afford employees compared to fixed systems.

Proposed paragraph (b)(14)(ii) requires that ladderway floor holes or platforms be guarded by a guardrail system with toeboards on all exposed sides, except at the entrance opening, with passage through the railing provided by a swinging gate or offset so that an employee cannot walk directly into the hole.

Proposed paragraph (b)(14)(iii) requires that hatchway and chute-floor

holes be guarded using one of three options. The first option, specified in proposed (b)(14)(iii)(A), provides for hinged floor-hole covers of standard strength and construction and equipped with permanently attached guardrails that only leave one exposed side. When the hole is not in use, the cover must be closed, or the exposed side must be guarded by a removable guardrail system with top and mid rails. The second option, found in proposed paragraph (b)(14)(iii)(B), specifies a removable guardrail system with toeboards on not more than two sides of the hole and a fixed guardrail with toeboards on all other exposed sides. The removable guardrail system must remain in place when the hole is not in use. The third option, found in proposed paragraph (b)(14)(iii)(C), provides that, when operating conditions require feeding material through a hatchway or chute hole, employees be protected from falling through the hole by a guardrail system or a travel-restraint system meeting the applicable requirements of 29 CFR part 1910, subpart I.

OSHA requests comment on whether there are any other specific surfaces, operations, or work activities (*e.g.,* satellite dish realignment, chimney cleaning, and sky light maintenance) not addressed here in proposed paragraph (b) that should be treated separately. For each surface, operation, or activity, please provide the types of fall protection that OSHA should permit and provide the reasons why the surface, operation, or activity should be treated separately.

In paragraph (c) of § 1910.28, OSHA proposes to require employers to protect employees from injury from falling objects both by ensuring the use of head protection, and by complying with one of the following provisions: (1) Using toeboards, screens, or guardrail systems; (2) erecting a canopy structure over the potential fall area and keeping potential falling objects far enough from the edge of the higher level so those objects are unlikely to fall, even if they are accidentally displaced; or (3) barricading the area into which objects could fall, prohibiting employees from entering the barricaded area, and keeping objects far enough away from the edge of a higher level so those objects are unlikely to fall even if they are accidentally displaced. The proposed requirements, patterned after OSHA's construction industry standards in § 1926.501(c), clarify the intent of the existing general industry requirements in § 1910.23(b)(5) and (c)(1) pertaining to falling object hazards.

Section 1910.29 Fall Protection Systems Criteria and Practices

This section of the proposal provides the requirements for fall protection systems required by proposed § 1910.28 and by other subparts in part 1910 where criteria and practices are not specifically required. However, proposed § 1910.29 does not apply where another standard in part 1910 already specifies the criteria for a required fall protection system. For example, § 1910.269(g) sets a duty to use fall protection and also specifies the criteria for some of the required systems.

As explained in proposed § 1910.28, Duty to have fall protection, employers who are required by that section to provide fall protection must choose a fall protection measure from the options provided for the particular activity or operation. Then the employer must ensure that the chosen system or practice meets the criteria established in proposed § 1910.29. Additionally, as required by proposed § 1910.30 and § 1910.132(f), employees must be trained in how to use the system, including, where applicable, the installation and maintenance of the fall protection system.

The requirements proposed here, like the requirements proposed in § 1910.28, are patterned after the requirements in OSHA's construction industry standards. OSHA believes that this approach will bring consistency to its fall protection standards and make it easier for employers to comply, especially employers who perform work covered by both the construction and general industry standards. The criteria for *personal* fall protection systems are located at newly proposed § 1910.140 of subpart I, Personal Protective Equipment, which is being published as part of this proposal.

Paragraph (a)—General Requirements.

Proposed paragraph (a) sets general requirements applicable to all fall protection systems covered by part 1910. In paragraph (a)(1), OSHA proposes that all fall protection systems required throughout part 1910 conform to the requirements of this section or, where personal fall protection systems are used, to subpart I of this part. In proposed paragraph (a)(2), OSHA requires that employers provide and install all fall protection systems required by this subpart and comply with all other pertinent requirements of this subpart (including training) before any employee begins work that necessitates the use of fall protection. OSHA notes that under existing § 1910.132(h), with few exceptions (such as non-specialty safety-toe protective footwear), personal protective equipment, including fall protection equipment, must be provided by the employer at no cost to the employee.

OSHA's intent is that fall protection systems be installed, permanently where possible, so that the systems are in place and available for use whenever there is a potential exposure to fall hazards. Because most general industry employers are at fixed sites, OSHA envisions that employers will take a proactive approach to managing fall hazards and will want to have fall protection systems in place at all times. That is, OSHA believes employers will anticipate the need for employees to walk or work on surfaces where a potential fall hazard exists and install a permanent fall protection system (*e.g.,* guardrail system) or attachment (tie-off) point so that fall protection is readily available when needed. OSHA believes such planning is part of the standard operating procedures for many employers as they plan for overall safety at the workplace. Planning eliminates the need to use a less protective measure, like a safe work practice, when a more conventional method such as a guardrail system, restraint system, or personal fall arrest system would be more appropriate. OSHA, however, recognizes that there may be some, limited situations where the use of less protective, but nonetheless effective, measures may be warranted; for example, when the work to be performed is of a short term or temporary nature. To illustrate, OSHA does not envision that employers will put a permanent guardrail system around the perimeter of an entire roof when work on the roof is non-routine. When the work is non-routine, they may erect a permanent guardrail system on one small area of the roof, or, most likely, establish a designated area meeting the criteria in proposed paragraph (d).

Paragraph (b)—Guardrail Systems.

In paragraph (b), OSHA proposes that all guardrail systems (except those used on scaffolds which must comply with applicable part 1926 requirements) comply with the criteria set forth in proposed paragraphs (b)(1) to (b)(15) of this section. The 15 proposed requirements are essentially the same as the existing requirements in subpart D, and they are nearly identical to the construction industry requirements for guardrail systems found in § 1926.502(b). OSHA notes that the preamble to the final rule establishing § 1926.502 (59 FR 40733) contains

explanatory material for each of the provisions proposed for paragraph (b) and may provide additional information to assist employers in complying with the proposed rules.

Existing subpart D refers to both "standard railings" and "guardrails." In this proposal, the term "standard railings" will not be used. OSHA believes that the proposed revisions to the guardrail requirements are easier to understand, reflect current work practices, and ensure consistency among OSHA rules applicable to guardrails.

Proposed paragraph (b)(1) requires that the top edge of guardrail systems be 42 inches (107 cm), plus or minus 3 inches (8 cm), above the walking-working surface.[2] It also states that, when conditions warrant, the top edge of the guardrail system may exceed 45 inches (114 cm) provided all other conditions of proposed paragraph (b) have been met to protect employees from falling through openings in the guardrail system. The proposed provision is essentially the same as the existing requirement in § 1910.23(e)(1), except that the existing requirement does not specifically allow for exceeding the 45-inch (114 cm) top height requirement. The new language is added because OSHA has already adopted this approach in its construction industry standards at § 1926.502(b)(1). In the preamble to the final rule for the construction industry standard OSHA noted that it was allowing employers to exceed the 45-inch (114 cm) height requirement because it was aware that there will be situations where work conditions necessitate erecting the guardrail so the top edge height is greater than 45 inches (114 cm). OSHA believes such conditions may also exist in general industry; if so, exceeding the 42-inch (107 cm) height requirement would not impact employee safety. For that reason, OSHA is proposing the revised language.

OSHA is considering a new provision that would allow the use of barriers as the functional equivalent of guardrails. This provision would permit barriers, such as parapets, to be as low as 30 inches (76 cm) in height, provided the sum of the depth of the top of the barrier and the height of the top edge of the barrier is at least 48 inches (1.2 m). For example, at the minimum height of 30 inches, an 18-inch width would be required. The Agency requests comment regarding the technological feasibility of this proposed provision requiring other means of fall protection (*e.g.,* travel restraint systems) in these applications. Please include supporting rationale, as well as information on the costs and benefits of such a provision.

Proposed paragraph (b)(2) requires midrails, screens, mesh, intermediate vertical members, or equivalent intermediate structural members to be installed between the top edge of the guardrail system and the walking-working surface when there is no wall or parapet wall at least 21 inches (53 cm) high to keep employees from falling through the opening. The proposed provision is essentially the same as the existing requirements in § 1910.23(e)(1) and (e)(3)(v)(*c*), and in the construction industry standard at § 1926.502(b)(2).

In proposed paragraphs (b)(2)(i) through (iv) OSHA establishes requirements for midrails, screens, mesh, intermediate vertical members, and other structural members. Proposed paragraph (b)(2)(i) specifies that when midrails are used to comply with proposed paragraph (b)(2), they must be installed midway between the top edge of the guardrail system and the walking-working level. Proposed paragraphs (b)(2)(ii), (iii), and (iv) address the proper placement of screens, mesh, intermediate vertical members, and other structural members when they are used in lieu of midrails in the guardrail system.

Proposed paragraph (b)(3) requires guardrail systems to be capable of withstanding, without failure, a force of at least 200 pounds (890 N) applied within 2 inches (5 cm) of the top edge, in any outward or downward direction at any point along the top edge. Proposed paragraph (b)(4) requires that when the 200-pound load is applied in a downward direction, the top edge of the guardrail must not deflect to a height less than 39 inches (99 cm) above the walking-working level. Deflection is specified for the top edge because that is the point an employee is most likely to fall against and it must be high enough, at all times, to prevent the employee from falling over the top rail. The proposed provisions are essentially the same as the existing requirements in § 1910.23(e)(3)(v)(*b*). and in the construction industry standard at § 1926.502(b)(3) and (b)(4).

Proposed paragraph (b)(5) requires midrails, screens, mesh, intermediate vertical members, solid panels, and equivalent structural members to be capable of withstanding, without failure, a force of at least 150 pounds (667 N) applied in any downward or outward direction at any point along the midrail or other member. The existing standard does not contain a strength requirement for midrails and this omission has caused confusion among employers. The proposed provision is nearly identical to OSHA's construction industry standard at § 1926.502(b)(5). In that rule, OSHA explained that it chose the 150 pound strength test because it had determined that midrails need not be as strong as top rails to provide appropriate protection. OSHA also determined that a limit on deflection was not needed for midrails and other members.

Proposed paragraph (b)(6) requires guardrail systems to be surfaced to prevent injury to an employee from punctures or lacerations and to prevent snagging of clothing. The provision is based on existing § 1910.23(e)(1) and (e)(3)(v)(*a*) and OSHA's construction industry standard at § 1926.502(b)(6).

Proposed paragraph (b)(7) requires employers to ensure that the ends of all top rails and midrails do not overhang the terminal posts, except where such overhang does not constitute a projection hazard. The proposed provision is essentially the same as existing § 1910.23(e)(1) and OSHA's construction industry standard at § 1926.502(b)(7).

Proposed paragraph (b)(8) prohibits steel banding and plastic banding from being used as top rails or midrails. While this banding can often withstand a 200-pound load, it can tear easily if twisted. In addition, banding often has sharp edges which can cut a hand if seized. This proposed requirement is similar to a requirement found in OSHA's construction industry standard at § 1926.502(b)(8).

Proposed paragraph (b)(9) requires top rails and midrails of guardrail systems to have at least a 0.25-inch (0.6 cm) diameter or thickness. OSHA believes that the minimum thickness requirement is needed to prevent the use of rope that could cause cuts or lacerations. This requirement is based on the construction industry standard at § 1926.502(b)(9). The proposed requirement supplements the strength

[2] OSHA notes that the two previous proposals on walking-working surfaces included a "grandfather provision" permitting a guardrail height of 36 inches, rather than the proposed 42 inches, for guardrails installed within 60 days of the effective date of the final rule. (*See* proposed § 1910.28(b)(3), 55 FR 13360 (April 10, 1990) and 68 FR 23528 (May 2, 2003).) The 36-inch grandfather provision is not included in this proposal, nor does OSHA consider it to be equally safe to the "42 inches nominal" height currently required under existing § 1910.23(e). Therefore, to the extent that any previous OSHA letters of interpretation characterized a 36-inch guardrail height as a de minimis violation because of the grandfather provision in the two previous proposals, those interpretations are hereby superseded. (*See, e.g.,* 08/27/2008 Letter to Bryan Cobb and 03/08/1995 Memorandum from John Miles to Byron Chadwick.)

requirement proposed in (b)(3), (4), and (5) of this section. The purpose of this requirement is to assure that top rails and midrails made of high strength materials are not so thin that a worker grabbing a rail is injured by cuts or lacerations because of the small size of the rail.

Proposed paragraph (b)(10) requires that when guardrail systems are used at hoisting areas, a chain gate or removable guardrail section must be placed across the access opening between guardrail sections when hoisting operations are not taking place. The proposed requirement simply clarifies the requirements of existing § 1910.23(a)(3)(ii) and (b)(1)(i). It is identical to OSHA's construction industry standard at § 1926.502(b)(10).

Proposed paragraph (b)(11) requires that when guardrail systems are used at holes, they must be erected on all unprotected sides or edges of the hole. This requirement is identical to OSHA's construction industry standard at § 1926.502(b)(11).

Proposed paragraph (b)(12) requires that when guardrail systems are used around floor holes used for the passage of materials, the hole must have not more than two sides provided with removable guardrail sections to allow for the passage of materials. When the hole is not in use, it must either be closed over with a cover, or a guardrail system must be provided along all unprotected sides or edges. This requirement is based on existing § 1910.23(a)(8)(ii) and is the same as the construction industry standard at § 1926.502(b)(12). It is intended to prevent employees from falling into the hole.

Proposed paragraph (b)(13) requires that when guardrail systems are used around holes used as points of access (such as ladderway openings), they must either be provided with a gate, or be offset so that a person cannot walk directly into the hole. This requirement is essentially the same as the existing standard at § 1910.23(a)(2), the construction industry standard at § 1926.502(b)(13), and the national consensus standard, ANSI A1264.1–2007, American National Standard—Safety Requirements for Workplace Walking/Working Surfaces and Their Access; Workplace, Floor, Wall and Roof Openings; Stairs and Guardrail Systems.

Proposed paragraph (b)(14) requires that guardrail systems used on ramps and runways be erected along *each* unprotected side or edge. This requirement is essentially the same as the construction industry standard at § 1926.502(b)(14) for ramps and runways.

Proposed paragraph (b)(15) requires manila, plastic, or synthetic rope being used for top rails or midrails to be inspected as frequently as necessary to ensure that it continues to meet the strength requirements of proposed paragraph (b)(3) of this section. OSHA believes frequent inspection is necessary for ropes made of these materials to ensure that they do not deteriorate and lose strength. This requirement is the same as OSHA's construction industry standard at § 1926.502(b)(15).

Proposed paragraph (b)(16) requires guardrail systems used on scaffolds to meet the applicable requirements set forth in part 1926 of this chapter. As discussed above in proposed § 1910.27, Scaffolds and rope descent systems, OSHA is proposing to remove the general industry requirements for scaffolds, and instead require compliance with the construction industry requirements for scaffolds. The construction industry requirements specifying the criteria for guardrails used on scaffolds differ from the requirements proposed for guardrails used on other surfaces. Therefore, OSHA proposes to add new paragraph (b)(16) for consistency, and to promote compliance and eliminate confusion since many employers who use scaffolds perform both general industry and construction work.

Paragraph (c)—Safety Net Systems

Proposed paragraph (c) requires safety net systems used in general industry to meet the criteria and use requirements for safety net systems already promulgated for the construction industry at § 1926.502(c). There are no requirements in existing subpart D or elsewhere in part 1910 (the general industry standards) that address safety net systems. OSHA believes, however, that there are situations, especially in maintenance work, where, due to the unsuitability of guardrail systems or personal fall protection systems, the use of a safety net system is an appropriate means of employee protection. OSHA believes that safety net systems used in general industry should be subject to the same requirements already promulgated for the construction industry. Those requirements were based on the national consensus standard for safety nets (*i.e.,* ANSI A10.11–1989). Rather than repeating all of those requirements here, OSHA proposes to simply require that where safety net systems are used, they meet the requirement of § 1926.502(c). A complete discussion of each of the requirements and an explanation of their meaning can be found in the preamble to the construction fall protection rule of August 9, 1994, at 59 FR 40699 to 40702.

OSHA requests comment on whether requiring compliance with the construction rule is appropriate or whether OSHA should repeat each of those requirements in the general industry standard. OSHA believes safety net systems will not be used in general industry as often as other fall protection systems and, therefore, it would not be an inconvenience to require employers to follow the construction industry rules in part 1926 without repeating them here. This is the same approach OSHA is proposing for scaffolds used in general industry; *see* the discussion at § 1910.27 above. OSHA notes that the requirements for safety net systems codified in part 1926 are essentially the same as those prescribed in the most current version of ANSI A10.11–1989 (R1998), American National Standard for Construction and Demolition Operations—Personal and Debris Nets.

Paragraph (d)—Designated Areas

OSHA is proposing new requirements in paragraph (d) regarding the use of "designated areas." OSHA is proposing to allow the use of designated areas, in some instances, as an alternative to providing conventional fall protection. A designated area, defined in proposed § 1910.21, is a section of a walking-working surface around which a perimeter line has been erected so that employees within the area are warned, when they *see* or contact the line, that they are approaching a fall hazard. As required by proposed § 1910.30(a)(2)(iii), employees working in designated areas must be trained in how to work safely inside those area.

Designated areas may only be used for temporary, relatively infrequent work; for instance, when employees are sent to the center of the roof of a structure to perform maintenance on machinery, such as air conditioning equipment. The Agency anticipates that setting up and maintaining a warning line system, as specified in this proposed paragraph, around a designated area will ensure that affected employees can perform their work free from fall hazards. The construction industry standard, § 1926.501(b)(10), provides for use of a warning line system (in conjunction with other protection) when employees are performing roofing work on low-sloped roofs, and §§ 1926.501(b)(9) and 1926.502(k), permit the use of "controlled access zones" in other situations. To ensure OSHA standards regulate comparable work situations consistently, the Agency is basing

proposed paragraph (d) on the construction industry standards for warning line systems. The Agency requests comments and supporting rational on the appropriateness of using the construction industry requirements for controlled access zones (found at § 1926.502(g)) in lieu of its use of the construction industry requirements for warning lines. Among other differences, warning line systems require the line between stanchions to have a 500-pound tensile strength, whereas the controlled access zone only requires a 200-pound tensile strength.

Proposed paragraph (d)(1) sets conditions for the use of designated areas, requiring that employers ensure that employees remain in the designated area during work operations, that the work be of a temporary nature, that the slope of the surface be 10 degrees or less from the horizontal, and that the designated area be surrounded by a rope, wire, or chain supported by stanchions meeting the criteria in proposed paragraphs (d)(2) through (d)(4). The 10 degree slope limitation reflects OSHA's belief that the designated area approach is only appropriate for surfaces that have a slight slope (pitch) or unevenness. In particular, OSHA is concerned that a warning line system would not work on a surface that has a slope of more than 10 degrees because visibility and the employee's ability to stop when the warning line is contacted could not be ensured.

Proposed paragraph (d)(2), which is consistent with §§ 1926.502(f)(2) and 1926.502(g)(3), provides criteria for the materials used to establish designated areas. Proposed paragraph (d)(2)(i) requires that stanchions with rope, wire, or chain attached be capable of resisting, without tipping over, a force of at least 16 pounds (71 N) applied horizontally against the stanchion at a height of 30 inches (76 cm) above the working surface, perpendicular to the designated area line, and in the direction of the exposed edge. OSHA believes that the ability to resist a force of 16 pounds (71 N) ensures that an employee is adequately warned that the edge of the designated area has been reached.

Proposed paragraph (d)(2)(ii) requires that the rope, wire, or chain used to demarcate designated areas have a minimum breaking or tensile strength of 500 pounds (2.2 kN). In addition, after being attached to the stanchions, the line must support, without breaking, the 16 pound (71 N) force applied to the stanchion. This performance requirement assures that the line is durable and capable of functioning as intended, regardless of how far apart the stanchions are placed. In addition, the minimum tensile strength of 500 pounds (2.2 kN) assures that the line is made of material more substantial than string, such as wire, chain, rope, or heavy cord. OSHA believes that this minimum tensile strength is not an unreasonable burden on employers; however, comments are requested on the appropriateness of this requirement.

Proposed paragraph (d)(2)(iii) requires that the line be attached at each stanchion in such a way that pulling on one section of the line between stanchions will not result in slack being taken up in adjacent sections before a stanchion tips over. To maximize the warning capabilities of the line demarcating the designated area, the proposal limits the amount of potential slack in the system. Slack in the line decreases its warning properties.

Proposed paragraph (d)(2)(iv), which is also consistent with §§ 1926.502(f)(2) and 1926.502(g)(3), requires that the height of the designated area line be no less than 34 inches (86 cm) nor more than 39 inches (99 cm) from the work surface. This height is low enough to warn a short employee while the worker is stooped over, and at the same time, it is high enough not to be a tripping hazard for taller workers.

Proposed paragraph (d)(2)(v) requires the perimeter of the designated area to be readily visible from a distance up to 25 feet (7.6 m) away, or at the maximum distance a worker may be positioned away from the line, whichever is less. This criterion is provided so that the lines will be readily apparent and can effectively warn employees to stay away from fall hazards. OSHA does not believe that flagging, as required in §§ 1926.502(f)(2)(i) and 1926.502(g)(3)(i), is necessary for a designated area. In general industry, work is usually performed at a fixed location, while in construction there is a greater need for aids to visibility (such as flagging) because the work location, including the fall hazard, shifts from one part of the roof to another.

Proposed paragraph (d)(3) sets forth how the designated area is to be established. Proposed paragraph (d)(3)(i) requires that stanchions be erected as close around the work area as permitted by the work task. This criterion is included to make the stanchions as obvious as possible without interfering with the work.

Proposed paragraph (d)(3)(ii), which is consistent with §§ 1926.502(f)(1)(i) and 1926.502(g)(1), requires that the perimeter of the designated area be erected at least 6 feet (1.8 m) from the exposed edge of the fall hazard. OSHA believes that the 6-foot (1.8 m) distance is sufficient to allow an employee to stop moving toward the fall hazard after realizing that the perimeter line has been contacted. This distance would also provide an adequate safety zone should an employee trip and fall at the edge of the designated area.

Proposed paragraph (d)(3)(iii), which is consistent with § 1926.502(f)(1)(ii), requires that when mobile mechanical equipment is being used, the line be erected not less than 6 feet (1.8 m) from the unprotected side or edge which is parallel to the direction of mechanical equipment operation, and not less than 10 feet (3 m) from the unprotected side or edge perpendicular to the direction of mechanical equipment operation. The proposed criterion provides additional distance for the employee to stop moving towards the hazard, taking into account the extra momentum of the equipment being used.

Proposed paragraph (d)(4) requires that access to the designated area be made by a clear path formed by two warning lines attached to stanchions that meet the strength, height, and visibility requirements of proposed (d)(2) above. This proposed provision was adopted from the requirements in the construction industry standard at § 1926.502(f)(1)(iii). That standard requires access paths when warning line systems are used during roofing work performed on low sloped roofs. As discussed earlier, the concept of "designated areas" is based on the construction industry requirements for warning line systems and controlled access zones. OSHA requests comment on whether an access path is reasonably necessary to protect employees in general industry as they travel to and from designated areas. Specifically, should OSHA remove, keep, or alter this provision in the final rule?

Paragraph (e)—Covers

Proposed paragraph (e) sets requirements for covers used to protect employees from falling into holes in floors, roofs, roadways, and other walking-working surfaces. Except for proposed (e)(4), the proposed requirements are a consolidation and revision of existing requirements related to covers found in §§ 1910.23(a)(7), (8), and (9) and 1910.23(e)(7) and (8). They are consistent with the requirements for covers found in the construction industry standards at § 1926.502(i). The proposed requirements are written in performance language and replace the specification language of the existing standard.

Proposed paragraph (e)(1) requires that covers located in roadways and vehicular aisles be capable of

supporting, without failure, at least twice the maximum axle load of the largest vehicle expected to cross over the cover. The proposed requirement is a revision of the existing requirements in § 1910.23(e)(7)(i) and (e)(7)(ii) and has been rewritten in favor of the performance-oriented approach used in the construction industry standard at § 1926.502(i)(1).

Proposed paragraph (e)(2) requires that all other covers must be capable of supporting at least twice the weight of employees, equipment, and materials that may be imposed on the cover at any one time. OSHA believes that compliance with the proposed paragraph would adequately protect employees who traverse covers. The provision is identical to the construction industry requirement at § 1926.502(i)(2). The Agency requests comment on whether the distinction made between (e)(1) and (e)(2) is useful, or if proposed paragraph (e)(1) should be removed because of the apparent redundancy between it and paragraph (e)(2).

Proposed paragraph (e)(3) requires that covers be secured when installed so as to prevent accidental displacement, *e.g.,* by wind, equipment, or employees. This provision clarifies the requirement in existing § 1910.23(a)(9) that floor opening covers be held firmly in place and ensure that employers anticipate and take precautions against all possible causes of cover displacement. The proposed requirement is nearly identical to the construction industry standard at § 1926.502(i)(3).

Proposed paragraph (e)(4) requires that covers be color-coded or marked with the word "HOLE" or "COVER" to provide warning of the hazard. An exception to proposed paragraph (e)(4) states that the provision does not apply to cast iron manhole covers or steel grates such as those used on streets or roadways. This is a new requirement based on the construction industry standard at § 1926.502(i)(4). OSHA is proposing to add the requirement to the general industry standard for the same reason it was added to the construction industry standard. Many commenters to the construction industry standard noted that covers should be color-coded or marked because alerting employees that the cover is over a hole could prevent them from accidentally walking into the hole. OSHA requests comment on the need to include proposed (e)(4) in the final rule, and also for information on the extent to which employers are already marking or color-coding covers.

Paragraph (f)—Handrail and Stair Rail Systems

Proposed paragraph (f) would set requirements for handrail and stair rail systems to protect employees from falling. Proposed paragraph (f)(1) establishes height requirements for handrails and stair rail systems. Proposed paragraph (f)(1)(i) requires that the height of handrails be between 30 inches (76 cm) and 37 inches (94 cm), from the top of the handrail to the surface of the tread in line with the face of the riser at the forward edge of the tread. Existing § 1910.23(e)(5)(ii) requires that handrails be between 30 and 34 inches (76 and 86 cm) in height. The proposed requirement is consistent with the construction industry standard at § 1926.1052(c)(6). OSHA intends that the proposed change will not require any change to handrails that meet the existing standard.

Proposed paragraph (f)(1)(ii) is a revision of existing § 1910.23(e)(2) and requires the height of stair rails installed 90 days after the effective date of the final rule to be not less than 36 inches (91 cm). The existing standard sets a limit between 30 (76 cm) and 34 inches (86 cm), and the proposed rule would continue to allow stair rails installed before the new requirement takes effect to be at least 30 inches (76 cm) from the upper surface of the tread. The proposed paragraph raises the minimum height of new stair rails 6 inches (15 cm) and removes the existing maximum height requirement. The proposed requirement is consistent with the construction industry requirement at § 1926.1052(c)(3). Like the construction rule, it is based on a recommendation in a study conducted by the University of Michigan (OSHA–S041–2006–0666–0004). As discussed in the preamble to the construction industry final rule (55 FR 47668), that study showed that the minimum height for stair railings should be 42 inches (107 cm) and suggests that even 42 inches may be too low. Additionally, the applicable national consensus standard, ANSI A1264.1–2007, prescribes that the minimum height of stair rails be 34 inches (86 cm) and the upper height at 42 inches (107 cm). OSHA believes that setting the minimum height at 36 inches (91 cm) will afford a reasonable level of safety to employees. However, OSHA requests comment on whether it should raise the minimum height to 42 inches (107 cm) to be within the recommended range of the University of Michigan study.

OSHA also requests comment on whether it should set a maximum height for stair rail systems. OSHA is proposing to delete the current upper height limit of 34 inches (86 cm) because an upper height limit serves no purpose. The purpose of the stair rail system is to prevent employees from falling over the edge of open-sided stairways. Eliminating the upper limit would allow employers flexibility to install safer systems.

Proposed paragraph (f)(1)(iii) is a new provision which permits a stair rail to serve as a handrail when the height of the top edge is not more than 37 inches (94 cm) nor less than 36 inches (91 cm) when measured at the forward edge of the tread surface. OSHA believes a single system may perform the function of both a stair rail and handrail provided the rail is at the appropriate height. The proposed requirement is consistent with a similar requirement in the construction industry standard at § 1926.1052(c)(7) and provides greater flexibility without reducing safety.

Proposed paragraph (f)(2) continues the existing requirement in § 1910.23(e)(6) that there be a minimum clearance of 3 inches (8 cm) between a handrail and any obstructions. The existing rule is consistent with the construction industry requirement at § 1926.1052(c)(11). In the earlier (1990) rulemaking, OSHA proposed that the requirement be revised to require 1.5 inches (4 cm) of clearance. OSHA's basis for the 1990 proposal was to be consistent with many local building codes; the applicable national consensus standard at the time, ANSI A12.1–1973; the draft revision to it, ANSI A1264.1; and ANSI A117.1–1986, Providing Accessibility and Usability for Physically Handicapped People (Ref. 52 in Docket S–041). However, the 2007 revision to the ANSI A1264.1 standard sets 2.25 inches (6 cm) rather than 1.5 inches (4 cm) as the appropriate clearance; no reason is provided. OSHA does not believe that ¾ inch (2 cm) represents a significant difference and is of the opinion that consistency between the construction and general industry provisions will eliminate potential confusion and ease compliance. Nonetheless, OSHA requests comment on whether it should revise this provision to set the minimum clearance at 2.25-inch (6 cm) as does the national consensus standard.

In paragraph (f)(3), OSHA proposes a minor revision to existing § 1910.23(e)(1) for stair rails and § 1910.23(e)(5)(i) for handrails. The proposed provision, like the existing provisions, would require the rails to be smooth-surfaced to prevent injury from puncture, laceration, or snagging hazards. The revised provision is written in clearer language. A similar

provision has been proposed in § 1910.29(b)(6) for the top rail of guardrail systems. The proposed requirement is consistent with the construction industry standard at § 1926.1052(c)(8).

Proposed paragraph (f)(4), based on existing § 1910.23(e), requires that the openings in stair rail systems be a maximum of 19 inches (48 cm) in their least dimension. The proposed requirement is consistent with the requirement for openings in guardrail systems in proposed paragraph (b)(2)(iii) of this section, which in turn is based on a study by the former National Bureau of Standards (now known as the National Institute of Standards and Technology) (Ref. 11 to Docket S–041). It is also consistent with the construction industry standards at § 1926.1052(c)(4) for openings in stair rails and with § 1926.502(b)(2)(iii) and (iv) pertaining to the size of openings in construction guardrail systems.

Proposed paragraph (f)(5), which is based on existing § 1910.23(e)(5)(i), requires handrails to provide a firm handhold for employees. The proposed provision is consistent with the construction industry standard at § 1926.1052(c)(9).

Proposed paragraph (f)(6), which is also based on existing § 1910.23(e)(5)(i), requires stair rail systems to be designed and constructed so that their ends do not present a projection hazard into which employees may inadvertently walk. The proposed provision is consistent with the construction industry standard at § 1926.1052(c)(10).

Proposed paragraph (f)(7) requires handrails and the top rails of stair rail systems to be capable of withstanding, without permanent deformation or a loss of support, a force of at least 200 pounds (890 N) applied within two inches (5 cm) of the top edge, in any downward or outward direction, at any point along the top edge. This is a minor revision of existing § 1910.23(e)(3)(iv) and (e)(5)(iv), and clarifies the design criteria for handrails and stair rails. It is consistent with the construction industry standards for stair rail systems in § 1926.1052(c)(5).

Paragraph (g)—Cages, Wells, and Platforms Used With Fixed Ladders

Proposed paragraph (g) establishes criteria for cages, wells, and platforms used with fixed ladders. The proposed requirements are a revision of the existing criteria located at § 1910.27(d).

Proposed paragraph (g)(1) requires that where cages and wells are installed on fixed ladders, they must be designed to permit easy access to or egress from the ladders that they enclose. The cages and wells must be continuous throughout the length of the fixed ladder except for access, egress, and other transfer points. Cages and wells must be designed and constructed to contain employees in the event of a fall and to direct them to a lower landing. The current standards, in § 1910.27(d), provide detailed specifications for the construction of cages and wells used on fixed ladders. OSHA has eliminated these specifications in this proposal in favor of performance requirements that address the necessary characteristics for providing proper cages and wells. OSHA believes that the existing specifications are too design restrictive, and that the use of performance language will allow employers the flexibility to install cages and wells that fit a particular situation, without compromising employee protection.

Proposed paragraph (g)(2) requires that the landing platforms on fixed ladders have a horizontal surface of at least 24 inches by 30 inches (61 cm by 76 cm). The criteria for the platform size in the proposed requirement is the same as existing § 1910.27(d)(2)(ii) and is also found in ANSI A14.3–2002. Platforms used on fixed ladders, like other platforms, must conform to the requirements set forth in proposed § 1910.22(b). That is, platforms must be strong enough to support the loads imposed on them.

Paragraph (h)—Qualified Climbers

Proposed paragraph (h) sets forth the criteria that employees must meet to be considered qualified climbers. The option to use a qualified climber in lieu of providing positive fall protection is *only* permitted in certain outdoor advertising operations, as established in proposed § 1910.28(b)(10). As provided in proposed § 1910.28(b)(10), upon reaching the platform, an employee must use fall protection. The criteria and performance requirements proposed here are based on the criteria requirements OSHA has enforced in the outdoor advertising industry as part of a variance originally granted to Gannett Outdoor Advertising on March 1, 1991 (56 FR 8801). The policy expressed in that variance was later extended to all employers engaged in outdoor advertising under a compliance directive (*i.e.,* STD 01–01–014) (Ex. 4).

Proposed paragraph (h)(1) requires that a qualified climber be physically capable of performing the duties that may be assigned, as demonstrated through observations of actual climbing activities or by a physical examination.

Proposed paragraph (h)(2) requires that a qualified climber have successfully completed a training or apprenticeship program that included hands-on training for the safe climbing of ladders, and that the climber be retrained as necessary to ensure the critical skills are maintained. This requirement is in addition to the training requirements in proposed § 1910.30.

Proposed paragraph (h)(3) requires the employer to ensure, through performance observations and formal classroom or on-the-job training, that the qualified climber has the skill to safely perform the climb.

Proposed paragraph (h)(4) requires that qualified climbers have climbing duties as one of their routine work activities. This is necessary to assure that they maintain climbing proficiency.

Paragraph (i)—Ladder Safety Systems

Proposed paragraph (i) establishes system performance and use criteria applicable to ladder safety systems. Existing subpart D, at § 1910.27(d)(5), permits the use of ladder safety systems (formerly called ladder safety devices), but does not specify criteria for them. The criteria proposed are based on the requirements for ladder safety systems in the construction industry standard for fixed ladders at §§ 1926.1053(a)(22) and (23) and the applicable national consensus standard for fixed ladders, ANSI A14.3–2002, Safety Standards for Ladders—Fixed.

Proposed paragraph (i)(1) specifies that ladder safety systems must permit the employee using the system to ascend or descend without continually having to hold, push, or pull any part of the system, leaving both hands free for climbing. The proposed requirement is consistent with ANSI A14.3 and the construction industry standard at § 1926.1053(a)(22)(ii).

Proposed paragraph (i)(2) specifies that the connection between the carrier or lifeline and the point of attachment to the body belt or harness must not exceed 9 inches (23 cm) in length. The proposed requirement is consistent with ANSI A14.3 and the construction industry standard at § 1926.1053(a)(22)(iv).

Proposed paragraph (i)(3) specifies that mountings for rigid carriers must be attached at each end of the carrier, with intermediate mountings, as necessary, spaced along the entire length of the carrier to provide the strength necessary to stop employee falls. The proposed requirement is consistent with ANSI A14.3 and the construction industry standard at § 1926.1053(a)(23)(i). OSHA notes that the manufacturer's recommendations should indicate the need for, and number of, intermediate mountings; for that reason, OSHA uses

the phrase "as necessary" rather than the use of more specific terminology.

Proposed paragraph (i)(4) requires mountings for flexible carriers to be attached at each end of the carrier. It further requires that cable guides utilized with a flexible carrier be installed at a minimum spacing of 25 feet (7.6 m) and a maximum spacing of 40 feet (12.2 m) along the entire length of the carrier. The proposed requirement is consistent with ANSI A14.3 and the construction industry standard at § 1926.1053(a)(23)(ii).

Proposed paragraph (i)(5) specifies that the design and installation of mountings and cable guides must not reduce the design strength of the ladder. The proposed requirement is consistent with ANSI A14.3 and the construction industry standard at 1926.1053(a)(23)(iii).

Proposed paragraph (i)(6) sets the performance criteria for ladder safety systems, requiring that ladder safety systems and their support systems be capable of withstanding, without failure, a drop test consisting of an 18-inch (46 cm) drop of a 500-pound (227 kg) weight. The proposed requirement is consistent with ANSI A14.3 and the construction industry standard at § 1926.1053(a)(22)(i).

OSHA notes that where personal fall protection systems are used to protect employees from falls from ladders, those systems must meet the requirements of subpart I of this part.

Paragraph (j)—Personal Fall Protection Systems

Proposed paragraph (j) requires that body belts, body harnesses, and other components used in personal fall arrest systems, work positioning systems, travel restraint systems, or other fall protection systems meet the applicable requirements of subpart I of this part.

Paragraph (k)—Protection From Falling Objects

Proposed paragraph (k) sets forth the performance criteria for toeboards, guardrails, and canopies used to provide employee protection from falling objects. Paragraph (c) of § 1910.28 requires employers to protect employees from falling objects. The proposed requirements reflect existing criteria in § 1910.23(e)(4) for toeboards and other measures used to provide this protection and include new criteria that must be met when canopies are used to provide protection. The proposed requirements are identical to those in the construction standards at 29 CFR 1926.502(j).

Proposed paragraph (k)(1) requires that where toeboards are used, they must be erected along the edge of overhead walking-working surfaces for a distance sufficient to protect any employee working below.

Proposed paragraph (k)(2) specifies that toeboards must be a minimum of 3.5 inches (9 cm) in vertical height from their top edge to the level of the walking-working surface. Additionally, toeboards must have a clearance of not more than 0.25 inch (0.5 cm) above the walking-working surface, and the toeboards must be solid or have no opening over 1 inch (3 cm) in the greatest dimension. An exception to this requirement applies when toeboards are used around repair, service, and assembly pits. In those cases, the toeboards must be at least 2.5 inches (6 cm) high. When employers can demonstrate that toeboards would prevent access to vehicles over pits, the toeboards may be omitted.

Proposed paragraph (k)(3) specifies that where tools, equipment, or materials are piled higher than the top edge of a toeboard, then paneling or screening must be erected from the walking-working surface or toeboard to the top of a guardrail system's top rail or midrail for a distance sufficient to protect employees below.

Proposed paragraph (k)(4) specifies that toeboards must be capable of withstanding, without failure, a force of at least 50 pounds (222 N) applied in any downward or outward direction at any point along the toeboard.

Proposed paragraph (k)(5) requires that, when guardrails are used as falling object protection, openings must be small enough to prevent passage of potential falling objects that could injure workers below.

Proposed paragraph (k)(6) requires that when canopies are used, they must be strong enough to prevent collapse or penetration when struck by falling objects.

Paragraph (l)—Grab handles

In paragraph (l), OSHA proposes that where grab handles are used, they be at least 12 inches (30 cm) in length and be mounted to provide at least 3 inches (8 cm) of clearance from the side framing or the opening area. Grab handles must be capable of withstanding a maximum horizontal pull-out force equal to two times the intended load, or 200 pounds (890 N), whichever is greater. OSHA notes that it has proposed to require the use of grab handles in § 1910.28(b)(2), Hoist areas. The proposed requirement is essentially the same as the existing requirement in § 1910.23(e)(10). OSHA requests comment on whether it should further simplify this requirement by eliminating that portion of the requirement that pertains to the length and the clearance space of grab handles, leaving only that portion of the proposed requirement concerned with pull-out force.

Section 1910.30 Training Requirements

In § 1910.30, OSHA proposes to add new requirements for employers to train, and where necessary, to retrain employees in the subject areas covered by revised subpart D. Specifically, employers will have to ensure that employees are trained to recognize fall hazards, know what do about the hazards, and how to use the equipment provided to them for protection. In addition, the new requirements call for employees to receive training about the hazards associated with certain equipment.

OSHA believes these new training requirements are necessary to ensure that employees are familiar with hazards, especially fall hazards, pertinent to the various walking-working surfaces in their workplace. Unlike OSHA's construction industry standards, there is no "generic" training section in the general industry standards. OSHA believes that effective training is vital in preventing and reducing work-related injuries, especially those caused by falls. OSHA also believes that educating employees provides a proactive approach to injury prevention.

OSHA notes that existing § 1910.132(f) sets training requirements for employees using certain types of PPE. In proposed § 1910.140, OSHA specifies that existing § 1910.132(f) apply to PPE used for fall protection. As a result, some of the requirements in § 1910.132(f) may overlap with the training requirements in this paragraph. It is not OSHA's intent, however, that employers provide duplicate training to meet their obligations under proposed subparts D and I.

Paragraph (a) Fall hazards.

Proposed paragraph (a) addresses fall hazards. Proposed paragraph (a)(1) requires the employer to provide training for each employee who uses personal fall protection equipment and those required to be trained as indicated elsewhere in this subpart. The training must enable each employee to recognize the hazards of falling and the procedures to be followed to minimize these hazards. The purpose of the training is to enable the employee to recognize fall hazards and to learn how to minimize these hazards. OSHA believes that it is important for employees to demonstrate the knowledge, skills, and ability to protect

themselves before they are exposed to a fall hazard.

The training required in proposed § 1910.30 is directed to employers whose employees use personal fall protection equipment and those who otherwise are required to be trained as specifically indicated in this subpart (*e.g.,* employees working near unprotected sides and edges at loading docks).

Are there any other instances in this subpart where training under § 1910.30 should specifically be required? Should employees exposed to fall hazards over four feet (including those using ladders) be trained? Do employees who use portable guardrails (*e.g.,* around floor holes or at hoist areas) need to be trained? Do employees who use portable ladders need to be trained on hazard recognition and proper use of the ladder? Do employees who use fixed ladders need to be trained in hazard recognition and proper climbing techniques? Since BLS data (*http://www.bls.gov/iif/oshcdnew.htm*) indicate falls to the same level (such as slips and trips resulting in a fall to the surface on which the employee was walking) are a significant source of injury, would additional training requirements for these hazards better protect employees? Are there circumstances where walking-working surfaces pose hazards, because of the nature of the work, which are infeasible to eliminate (*e.g.,* a wet floor in a carwash bay) and training would help minimize the risk of slips, trips, or falls?

Proposed paragraph (a)(2) requires that each employee be trained by a qualified person, and identifies four specific areas that the training must cover, including:

(i) The nature of fall hazards in the work area;

(ii) The correct procedures for erecting, maintaining, disassembling, and inspecting the fall protection systems to be used;

(iii) The use and operation of guardrail systems, safety net systems, warning lines used in designated areas, and other protection; and

(iv) The use, operation, and limitations of personal fall protection systems including proper hook-up, anchoring and tie-off techniques, methods of use, and proper methods of equipment inspection and storage as recommended by the manufacturer.

The performance-oriented approach to training proposed in paragraph (a)(2) provides flexibility for the employer in designing the training. While the proposed paragraph specifies topics that must be covered, it does not specify how the training is to be provided nor does it specify any particular number of hours. The proposed paragraph is written to require training to be provided by a "qualified person." OSHA believes that the involvement of a qualified person who is knowledgeable in the subject area and industry hazards, in conjunction with the specific requirements of proposed paragraphs (a) and (c), provides appropriate assurance that employees will be adequately trained.

Paragraph (b) Equipment hazards.

Proposed paragraph (b) addresses training with regard to equipment regulated by proposed subpart D. Proposed paragraph (b)(1) requires employers to ensure that employees are trained in the proper care, use, and inspection of all equipment covered by this subpart before using it.

Proposed paragraph (b)(2) requires that employees be instructed in the proper placing and securing of dockboards to prevent unintentional movement. Compliance with this provision will help employers meet their obligations under proposed § 1910.26. The hazards associated with dockboards becoming dislodged are significant, and OSHA believes that proper employee training will help to reduce these hazards.

Proposed paragraph (b)(3) requires the employer to ensure that all employees who use rope descent systems are trained and retrained as necessary in the proper rigging and safe use of that equipment. Compliance with this provision will help employers meet their obligations under proposed § 1910.27 for rope descent systems. Improper use of rope descent system equipment can lead to serious injuries and fatalities. OSHA believes that training employees to use the equipment properly minimizes the risks of equipment failure and employee falls.

Paragraph (c) Retraining.

Proposed paragraph (c) requires employees to be retrained whenever the employer has reason to believe that the employee does not have the understanding and skill required by proposed paragraphs (a) and (b). Specifically, OSHA requires retraining whenever changes in the workplace or changes in the fall protection systems or equipment render previous training obsolete; or when an employee has not retained the understanding or skill required by proposed paragraphs (a) and (b) of this section. The training requirements in this section have been written to indicate clearly that employers have an ongoing responsibility to maintain employee proficiency in the use and care of fall protection equipment, and to ensure employees are trained in safe work practices and can recognize hazards associated with certain equipment.

Paragraph (d) Training Must Be Understandable

Proposed paragraph (d) requires employers to provide information and training in a manner that is understandable to each employee. Differences in language, reading capabilities, and physical challenges may create communication issues in a workplace. It is essential that employers adapt their training methods so that all of their employees comprehend the information and training provided.

Other revisions to part 1910

The proposed changes to subparts D and I result in the need to make conforming changes to subparts F, N, and R in 1910. These changes, which are presented at the end of this proposal, are self-explanatory and do not substantially affect the requirements of these subparts.

References

- *Consumer Product Safety Commission Offers Safety Tips to Prevent Ladder Injuries, Ladder Safety Alert;* U.S. Consumer Product Safety Commission, Washington, DC 20207, undated (Web address: *http://www.cpsc.gov/CPSCPUB/PUBS/ladder.html*).
- *Injury Facts;* National Safety Council, 1121 Spring Lake Drive, Itasca, IL 60143–3201; 2005–2006 edition.
- Murphy, Patricia J. *Get a Leg Up on Ladder Safety; Family Safety & Health,* Spring 2001. Available through the National Safety Council at the following web address: *http://www.nsc.org/issues/firstaid/ladder.htm.*
- *Overview of BLS Statistics on Worker Safety and Health,* Bureau of Labor Statistics, Washington, DC (Web address: *http://www.bls.gov/bls/safety.htm*).
- *Preventing Slips, Trips, and Falls,* Professional Development Series, Participant's Guide (Kit Number 12466–0000). National Safety Council, 444 North Michigan Avenue, Chicago, Illinois 60611, 2006.
- *Portable Ladders;* Quick Card, Occupational Safety and Health Administration, Washington, DC, 2005.
- *Stairways and Ladders, A Guide to OSHA Rules;* Occupational Safety and Health Administration, Washington, DC, 2003.
- U.S. Department of Health and Human Services, Center for Disease Control and Prevention, National Institute for Occupational Safety and

Health, *Worker Deaths by Falls, A Summary of Surveillance Findings and Investigative Case Reports,* Cincinnati, Ohio 45226–1998, November 2000.

Useful Web sites providing information on safety include:

- OSHA's public page (contains many useful safety and health topics): *http://www.osha.gov/*.
- National Institute of Occupational Safety and Health: *http://www.cdc.gov/niosh/*.
- National Safety Council: *http://www.nsc.org/*.
- U.S. Consumer Product Safety Commission: *http://www.cpsc.gov/*.

The following industry codes and standards were used in the development of this proposed rule:

Industry codes and standards for ladders:

- ANSI [3] A14.1–2000, American National Standard for Ladders—Wood Safety Requirements.
- ANSI A14.2–2000, American National Standard for Ladders—Portable Metal—Safety Requirements.
- ANSI A14.3–2002, American National Standard for Ladders—Fixed—Safety Requirements.
- ANSI A14.4–2002, American National Standard Safety Requirements for Job-Made Wooden Ladders.
- ANSI A14.5–2000, American National Standard for Ladders—Portable Reinforced Plastic—Safety Requirements.
- ANSI A14.7–2006, American National Standard for Mobile Ladder Stands and Mobile Ladder Stand Platforms.

Industry standards and codes for step bolts and manhole steps:

- ASTM [4] C 478–07, American Society for Testing and Materials Standard Specification for Precast Reinforced Concrete Manhole Sections.
- ASTM A394–07, American Society for Testing and Materials Standard Specification for Steel Transmission Tower Bolts, Zinc-Coated and Bare.
- ASTM C 497–05, American Society for Testing and Materials Test Methods for Concrete Pipe, Manhole Sections, or Tile.
- IEEE [5] 1307–2004, IEEE Standard for Fall Protection for Utility Work.
- ANSI/TIA [6] –222–G–2005, Structural Standard for Antenna Supporting Structures and Antennas.

Industry codes and standards for stairs and stairways:

- ANSI A1264.1–1995 (R2002), American National Standard for Safety Requirements for Workplace Floor and Wall Openings, Stairs and Railing Systems.
- ANSI A1264.1–2007, American National Standard Safety Requirements for Workplace Walking/Working Surfaces and Their Access; Workplace, Floor, Wall and Floor Openings; Stairs and Guardrail Systems.
- NFPA 101–2006, National Fire Protection Association Life Safety Code.
- ICC–2003, International Code Council International Building Code.

Industry codes and standards for dockboards (bridgeplates):

- ASME B56.1–2000, American Society of Mechanical Engineers, Safety Standard for Low Lift and High Lift Trucks.
- ASME B56.1–2004, American Society of Mechanical Engineers, Safety Standard for Low Lift and High Lift Trucks.
- ANSI/MH30.1–2000, American National Standard For the Safety Performance, and Testing of Dock Leveling Devices Specification.
- ANSI/MH30.2–2005, Portable Dock Loading Devices: Safety, Performance, and Testing.

Industry codes and standards for scaffolds and rope descent systems:

- ANSI/IWCA I–14.1–2001, Window Cleaning Safety.
- ANSI/ASCE 7–2005, American National Standard for Minimum Design Loads for Buildings and Other Structures.
- ANSI A1264.1–1995 (R2002), American National Standard for Safety Requirements for Workplace Floor and Wall Openings, Stairs and Railing Systems.
- ANSI A1264.1–2007, American National Standard Safety Requirements for Workplace Walking/Working Surfaces and Their Access; Workplace, Floor, Wall and Floor Openings; Stairs and Guardrail Systems.

Industry codes and standards for fall protection (duty, systems criteria, and practices) and training requirements:

- ANSI A10.11–1989 (R1998), American National Standard for Construction and Demolition Operations—Personnel and Debris Nets.
- ANSI A14.3–2002, American National Standard for Ladders—Fixed—Safety Requirements.
- ANSI A14.7–2006, American National Standard for Mobile Ladder Stands and Mobile Ladder Stand Platforms.
- ANSI A1264.1–1995 (R2002), American National Standard for Safety Requirements for Workplace Floor and Wall Openings, Stairs and Railing Systems.
- ANSI A1264.1–2007, American National Standard, Safety Requirements for Workplace Walking/Working Surfaces and Their Access; Workplace, Floor, Wall and Floor Openings; Stairs and Guardrail Systems.
- ANSI/IWCA I–14.1–2001, Window Cleaning Safety.
- ANSI Z359.0–2007, American National Standard, Definitions and Nomenclature Used for Fall Protection and Fall Arrest.
- ANSI Z359.1–2007, American National Standard, Safety Requirements for Personal Fall Arrest Systems, Subsystems and Components.
- ANSI Z359.2–2007, American National Standard, Minimum Requirements for a Comprehensive Managed Fall Protection Program.
- ANSI Z359.3–2007, American National Standard, Safety Requirements for Positioning and Travel Restraint Systems.
- ANSI Z359.4–2007, American National Standard, Safety Requirements for Assisted-Rescue and Self-Rescue Systems, Subsystems and Components.

The following studies, cited in OSHA's April 10, 1990, proposed rulemaking (55 FR 13421), provide useful and relevant information, and are a valuable archival resource. These studies provide information that may be helpful in understanding and implementing the proposed standards for walking-working surfaces being proposed today.

I. General References

- *Accident Prevention Manual for Industrial Operations;* National Safety Council, 444 North Michigan Avenue, Chicago, Illinois 60611, 1980.
- *A History of Walkway Slip-Resistance Research at the National Bureau of Standards,* Special Publication 565; National Bureau of Standards, National Technical Information Service, Springfield, Virginia 22151, December 1979.
- *A New Portable Tester for the Evaluation of the Slip-Resistance of Walkway Surfaces,* Technical Note 953; National Bureau of Standards, National Technical Information Service, Springfield, Virginia 22151, July 1977.
- Miller, James *et al. Work Surface Friction: Definitions, Laboratory and Field Measurements, and a Comprehensive Bibliography;* The University of Michigan, Ann Arbor, Michigan 48109, February 1983. (NTIS *PB 83–243634, PE 83–243626, PB 84-175926).
- Chaffin, Don B. *et al. An Ergonomic Basis for Recommendations Pertaining*

[3] ANSI: American National Standards Institute.

[4] ASTM: American Society for Testing and Materials.

[5] IEEE: Institute of Electrical and Electronics Engineers.

[6] TIA: Telecommunications Industry Association.

to Specific Sections of OSHA Standard, 29 CFR Part 1910, Subpart D—Walking and Working Surfaces; The University of Michigan, Ann Arbor, Michigan 48109, March 1978.

• Ayoub, M. and Gary M. Bakken. *An Ergonomic Analysis of Selected Sections in Subpart D, Walking/Working Surfaces;* Texas University, Lubbock, Texas 79409, August 1978.

• *An Overview of Floor-Slip-Resistance Research with Annotated Bibliography,* Technical Note 895; National Bureau of Standards, National Technical Information Service, Springfield, Virginia 22151, January 1976.

• *A Bibliography of Coefficient of Friction Literature Relating to Slip Type Accidents;* Department of Industrial and Operations Engineering, College of Engineering, University of Michigan, Ann Arbor, Michigan 48104, February 1983.

• *Falls from Elevations Resulting in Injuries;* U.S. Department of Labor, Bureau of Labor Statistics, National Technical Information Service, Springfield, Virginia 22151, June 1984.

• English, William. *Slips, Trips and Falls—Safety Engineering Guidelines for the Prevention of Slips, Trip and Fall Occurrences;* Hanrow Press, Inc., P.O. Box 847, Del Mar, California 92014, 1989. (Also, telephone 800–235–5588 or e-mail at *heg101@msn.com*.)

II. Ladder References

• Chaffin, Don B. and Terrence J. Stobbe. *Ergonomic Considerations Related to Selected Fall Prevention Aspects of Scaffolds and Ladders as Presented in OSHA Standard 29 CFR Part 1910 Subpart D;* The University of Michigan, Ann Arbor, Michigan 48104, September 1979.

• *Ergonomics Considerations Related to Selected Fall Prevention Aspects of Scaffolds and Ladders as Presented in OSHA Standard 29 CFR Part 1910 Subpart D;* The University of Michigan, Ann Arbor, Michigan 48104.

III. Stair References

• Archea, John *et al. Guidelines for Stair Safety;* NBS Building of Science Series 120, National Bureau of Standards, National Technical Information Service, Springfield, Virginia 22151.

• Carson, D. H. *et al. Safety on Stairs;* National Bureau of Standards, National Technical Information Service, Springfield, Virginia 22151.

• Nelson, Gary S. *Engineering—Human Factors Interface in Stairway Treadriser Design;* Texas A&M University of Texas, Agricultural Extension Service, College Station, Texas 77843, May 1973.

IV. Fall Protection References

• *Personnel Guardrails for the Prevention of Occupational Accidents,* NBSIR 76–1132; National Bureau of Standards, National Technical Information Service, Springfield, Virginia 22151, July 1976.

• *Investigation of Guardrails for the Protection of Employees from Occupational Hazards,* NBSIR 76–1139; National Bureau of Standards, National Technical Information Service, Springfield, Virginia 22151, July 1976.

• *A Model Performance Standard for Guardrails,* NBSIR 76–1131; National Bureau of Standards, National Technical Information Service, Springfield, Virginia 22151, July 1976.

• National Technical Information Services (NTIS), 5285 Port Royal Road, Springfield, VA 22161. (Telephone: (703) 605–6000; Web address: http://www.ntis.gov/.)

C. Proposed Changes to Subpart I

OSHA is proposing to add a new section to existing subpart I, Personal Protective Equipment. The new section will be numbered § 1910.140 and titled: Personal fall protection equipment. It will contain five paragraphs, covering the following topics:

Paragraph (a) will contain the scope and application for the new section.

Paragraph (b) will contain terms and definitions applicable to personal fall protection systems.

Paragraph (c) will contain general requirements applicable to all types of personal fall protection systems covered and will contain inspection requirements and design criteria common to components used in all systems.

Paragraph (d) will contain additional, specific requirements for personal fall arrest systems and will address equipment such as body harnesses, lifelines, deceleration devices (i.e., rope grabs and rip-stitch lanyards), and lanyards.

Paragraph (e) will contain additional, specific requirements for positioning device systems. This is equipment, such as a window cleaner's belt, that is used to support an employee in a work position.

In addition, OSHA proposes to add two non-mandatory appendices (C and D) to proposed § 1910.140 to help employers select appropriate equipment and use it properly. (**Note:** Existing Appendices A and B to subpart I are not affected by this rule and remain unchanged.) Proposed Appendix C provides useful information and guidance concerning the use of personal fall arrest systems. Proposed Appendix D provides examples of test methods for personal fall arrest and positioning device systems. The following discussion provides a more detailed explanation of the new provisions.

Section 1910.140 Personal Fall Protection Systems

Paragraph (a) Scope and Application

Proposed paragraph (a) explains that all personal fall protection systems used to comply with part 1910 must comply with the care and use criteria established by proposed § 1910.140.

Currently, there are a number of standards throughout part 1910 that require or permit the use of personal fall protection systems. In addition, the proposed revision of subpart D contains a number of new requirements allowing employers to choose to use personal fall protection systems in lieu of guardrail systems that are mandated under the existing rules. With few exceptions, the existing standards do not specify the criteria for the design, operation, performance, or use of fall protection systems. Without such criteria, OSHA believes there is risk that personal fall protection systems, especially personal fall *arrest* systems, will fail. Such failure may occur for a number of reasons, including: use of the wrong system (especially one that is not strong enough for its purpose); use of a system that was not inspected or tested before use; use of a system that is not rigged properly; use of a system with non-compatible components; or use of a system for which the employee is not properly trained. While the vast majority of fall protection systems currently in use meet national consensus standards, OSHA believes that, because of the absence of specific general industry standards, there is likely insufficient awareness of appropriate criteria for their use. When this rule is promulgated, employers who choose to use personal fall protection systems would have to ensure that those systems meet the criteria in this proposed provision.

Paragraph (b) Definitions

Paragraph (b) defines key terms used in the proposed standard. Most of the terms are already used in existing OSHA fall protection standards, including Appendix C of § 1910.66, Powered platforms for building maintenance, of the general industry standards; § 1926.502, Fall protection systems criteria and practices, of the construction standards; and §§ 1915.159, Personal fall arrest systems (PFAS), and 1915.160, Positioning

device systems, of the shipyard employment standards.[7] OSHA believes that employee safety will be enhanced by having the terms and definitions applicable to personal fall protection systems substantially identical whenever possible. This is particularly important because the same employees may be engaged in both general industry and construction activities. Having different meanings for the same terms could lead to confusion by employers, employees, and OSHA compliance staff. When a proposed definition differs from a definition used in the construction and shipyard employment standards, the difference is identified and explained in the discussion below.

OSHA has also reviewed the terms and definitions used in national consensus standards that are applicable to personal fall protection systems covered by the proposed rule, including ANSI/ASSE Z359.0–2007, Definitions and Nomenclature Used for Fall Protection and Fall Arrest; and other standards in the Z359 series. All of the terms and definitions used in this proposed rulemaking are based on existing OSHA standards or have their source in national consensus standards.

The following terms are defined in the proposed rule: anchorage, belt terminal, body belt, body harness, buckle, carrier, competent person, connector, D-ring, deceleration device, deceleration distance, equivalent, free fall, free fall distance, lanyard, lifeline, personal fall arrest system, personal fall protection system, positioning system, qualified person, rope grab, self-retracting lifeline/lanyard, snaphook, travel restraint (tether) line, travel restraint system, window cleaner's belt, window cleaner's belt anchor, window cleaner's positioning system, and work positioning system. Each term is discussed below.

Anchorage. OSHA proposes to define "anchorage" to mean a secure point of attachment for lifelines, lanyards, or deceleration devices. The definition is nearly identical to the definition in OSHA's general industry, construction, and the shipyard employment standards on fall protection. One variation is that the definition used in the general industry standard on fall protection goes beyond just defining the term, and also includes a requirement that the anchorage must be "independent of the means of supporting or suspending the employee." OSHA did not include this latter language in the proposed definition, but did include similar language in the appropriate requirement (*see* proposed § 1910.140(c)(12)).

The proposed definition is also consistent with the definitions in the national consensus standards, *i.e.,* ANSI/ASSE Z359.0–2007, Definitions and Nomenclature Used for Fall Protection and Fall Arrest; and ANSI/IWCA I–14.1–2001, Standard for Window Cleaning Safety; and it is identical to the definition used in ANSI/ASSE A10.32–2004, Fall Protection Systems.

Belt terminal. OSHA proposes to define "belt terminal" to mean an end attachment of a window cleaner's positioning system used for securing the belt or harness to a window cleaner's belt anchor. The term is used in the proposed requirements specific to fall protection for window cleaning operations. It is not currently defined in OSHA standards, nor is the term specifically defined in ANSI/IWCA I–14.1–2001, although its meaning is clear—that the belt terminal is the end part of a window cleaner's belt. OSHA is including the definition to clarify the intent of the requirements in proposed paragraph (e) relating to the attachment of belt terminals to window cleaner's belt anchors (window anchor). OSHA requests comment on whether this term and definition are needed to clarify the provision. That is, is the term's meaning in proposed paragraph (e) clear enough that a definition is not needed?

Body belt. OSHA proposes to define "body belt" to mean a strap with means both for securing about the waist and for attaching to other components such as a lanyard or lifeline, and that is used in positioning systems, travel restraint systems, and ladder safety systems. The definition is consistent with those in the OSHA general industry, construction, and shipyard employment standards on fall protection, as well as with the ANSI/ASSE Z359.0–2007 and ANSI/ASSE A10.32–2004 national consensus standards.

Body harness. OSHA proposes to define the term "body harness" to mean straps which may be secured about the employee in a manner to distribute the fall arrest forces over at least the thighs, pelvis, waist, chest, and shoulders with means for attaching it to other components of a personal fall arrest system. The definition is identical to the one in OSHA's general industry standards on fall protection, and nearly identical to that in the construction industry standard on fall protection. OSHA's shipyard employment standard on fall protection contains a similar definition, but that definition does not include the word "waist" in it.

The national consensus standard, ANSI/ASSE Z359.0–2007, has several definitions for various types of harnesses, including: harness, chest; harness, chest-waist; harness, evacuation; harness, full body; harness, positioning. The definition for full body harness (in section 2.74 of ANSI/ASSE Z359.0–2007) is essentially the same as the proposed subpart I definition. The proposed definition is also consistent with ANSI/IWCA I–14.1–2000, with one exception: the ANSI/IWCA consensus standard allows the use of body harnesses that permit the arresting forces to be distributed over *any combination* of the thighs, pelvis, waist, chest, and shoulders, rather than all combined. Including this phrase in the OSHA definition would allow the fall arrest forces to be distributed over the waist and chest only; therefore, OSHA has not adopted this aspect of the ANSI/IWCA consensus definition. OSHA believes the dangers of concentrating arresting forces in one anatomical area (for example, waist and chest only) are real and well documented. For example, Dr. Maurice Amphoux, *et. al.* (Ex. OSHA–S057–2006–0680–0070) conducted research into the use of thoracic harnesses for fall arrest. They concluded that these types of harnesses should not be used for fall arrest because the forces transmitted to the body during post-fall suspension constrict the rib cage and could cause asphyxiation. There is also an increased danger of falling out of the assembly.

OSHA solicits comments on this matter, as well as on whether there is a need to define other types of harnesses. For example, some types of body harnesses do not use a waist component but still distribute the forces over the torso. These harnesses have assemblies that prevent the shoulder straps from separating enough to allow the employee to fall out of the harness. OSHA does not intend to prohibit the use of this type of harness.

Buckle. OSHA proposes to define the term "buckle" to mean any device for holding the body belt or body harness closed around the employee's body. The definition is identical to the definition used in the general industry and construction standards on fall protection, and it is consistent with the ANSI/ASSE Z359.0–2007 and ANSI/ASSE A10.32–2004 national consensus standards on fall protection.

Carrier. OSHA proposes to define a "carrier" to mean the track of a ladder safety system consisting of a flexible cable or rigid rail which is secured to the ladder or structure by mountings. The definition is identical to ANSI/ALI

[7] Referred to hereafter as the "general industry, construction, and shipyard employment standards on fall protection."

A14.3–2002, American National Standards for Ladders—Fixed.

Competent person. OSHA proposes to define a "competent person" to mean a person who is capable of identifying hazardous or dangerous conditions in any personal fall protection system or any component thereof, as well as in their application and uses with related equipment. The definition is essentially the same as the one in OSHA's general industry powered platform standard (§ 1910.66), but it differs from the definition of competent person in OSHA's construction industry standard at § 1926.32. It also differs from both the ANSI/ASSE Z359.0–2007 and ANSI/ASSE A10.32–2004 national consensus standards in that the national consensus standards, like OSHA's construction industry definition, define a competent person as one who has the "authority to take prompt corrective action" to eliminate the hazards in the surroundings or working conditions.

OSHA's proposed definition does not require the competent person to have the authority to take prompt corrective action because the Agency believes that the competent person assigned to inspect personal fall protection systems serves a role different from that of the person that typically is designated as the competent person on construction jobs. In general industry the competent person will most likely be an outside contractor that specializes in fall protection, and which both designs the system, and provides training, usually at a remote location. It is unlikely that an outside contractor would be granted authority over work operations and, thus, OSHA believes the definition proposed allows the employer more flexibility in designating an appropriate competent person.

Connector. OSHA proposes to define "connector" to mean a device that is used to couple (connect) parts of the fall protection system together. The definition is essentially the same as OSHA's general industry, construction, and shipyard employment standards on fall protection. The proposed definition is also consistent with national consensus standards, including ANSI/ASSE Z359.0–2007 and ANSI/ASSE A10.32–2004. These other definitions also include some explanatory language stating that connectors may be independent components of the system, such as a carabiner; or may be integral components or parts of the system, such as a buckle or D-ring sewn into a body support (a body belt or body harness), or a snaphook spliced or sewn into a lanyard. The proposed definition does not include such explanatory language because OSHA believes it is not necessary.

D-ring. OSHA proposes to define a "D-ring" as a connector used integrally in a harness as an attachment element or fall arrest attachment, and in a lanyard, energy absorber, lifeline, and anchorage connector as an integral connector. Also, a D-ring means a connector used integrally in a positioning or travel restraint system as an attachment element. The term is not defined in existing OSHA standards but is defined, consistent with the proposed definition, in the national consensus standards ANSI/ASSE Z359.0–2007 and ANSI/ASSE A10.32–2004. ANSI/ASSE A10.32 also defines "integral" to mean not removable from the component, system, or subsystem without mutilating any element or without use of a special tool. This definition expresses OSHA's intent in using the term "integral" in the proposed definition of D-ring.

Deceleration device. OSHA proposes to define "deceleration device" to mean any mechanism that serves to dissipate energy during a fall. The definition is identical to the national consensus standard ANSI/ASSE A10.32–2004, but differs from the definition in OSHA's general industry, construction, and shipyard employment standard on fall protection. These OSHA standards expand on the definition by citing examples of devices that may be used to either dissipate a substantial amount of energy during a fall arrest, or otherwise limit the energy imposed on an employee during a fall. These devices include rope grabs, rip-stitch lanyards, specially woven lanyards, tearing and deforming lanyards, or automatic self-retracting lifelines/lanyards. ANSI/ASSE A10.32–2004 includes the same examples in its explanatory material, but not within the definition itself. ANSI/ASSE Z359.0–2007 does not define the term "deceleration device," but does define the terms "energy (shock) absorber," "fall arrester," and "self-retracting lanyard." OSHA notes that, in the preamble to the final rule for the construction industry fall protection standard (59 FR 40677), there is an extensive discussion about the definition of "deceleration device," including a discussion of commenter suggestions requesting that instead of defining the term "deceleration device," OSHA define the terms "shock absorber," "fall arrester," and "self-retracting lanyard." One of those comments was from an ANSI Z359 Committee representative:

> Comments were received on the definition of "deceleration device" [citations omitted]. It was suggested that this term be eliminated and replaced with three terms, "fall arrester," "energy absorber," and "self-retracting lifeline/lanyard" because the examples listed by OSHA in its proposed definition of deceleration device serve varying combinations of the function of these three suggested components. In particular, it was pointed out that a rope grab may or may not serve to dissipate a substantial amount of energy in and of itself. The distinction that the commenter was making was that some components of the system were "fall arresters" (purpose to stop a fall), others were "energy absorbers" (purpose to brake a fall more comfortably), and others were "self-retracting lifeline/lanyards" (purpose to take slack out of the lifeline or lanyard to minimize free fall). OSHA notes, however, that it is difficult to clearly separate all components into these three suggested categories since fall arrest (stopping) and energy absorption (braking) are closely related. In addition, many self-retracting lifeline/lanyards serve all three functions very well (a condition which the commenter labels as a "subsystem" or "hybrid component"). OSHA believes that the only practical way to accomplish what is suggested would be to have test methods and criteria for each of the three component functions. However, at this time, there are no national consensus standards or other accepted criteria for any of the three which OSHA could propose to adopt.
>
> In addition, OSHA's approach in the final standard is to address personal fall arrest equipment on a system basis. Therefore, OSHA does not have separate requirements for "fall arresters," "energy absorbers," and "self-retracting lifeline/lanyards" because it is the performance of the complete system, as assembled, which is regulated by the OSHA standard. OSHA's final standard does not preclude the voluntary standards writing bodies from developing design standards for all of the various components and is supportive of this undertaking.

OSHA invites comment on whether the Agency should remove the term "deceleration device" from subpart I and instead define the terms "fall arrester" and "energy absorber." The term "self-retracting lifeline/lanyard" is already defined in this proposed subpart I rule.

Deceleration distance. OSHA proposes to define the term "deceleration distance" to mean the vertical distance a falling employee travels before stopping, from the point at which the deceleration device begins to operate to the stopping point, excluding lifeline elongation and free fall distance. It is measured as the distance between the location of an employee's body harness attachment point at the moment of activation of the deceleration device during a fall (*i.e.,* at the onset of fall arrest forces), and the location of that attachment point after the employee comes to a full stop.

The proposed definition is identical to the definition in OSHA's general industry, construction, and shipyard employment standards on fall

protection, except that the reference to body belts has been removed. It is consistent with the ANSI/ASSE Z359.0–2007 and ANSI/ASSE A10.32–2004 consensus standards.

Equivalent. OSHA proposes to define "equivalent" to mean alternative designs, materials, or methods to protect against a hazard, which the employer can demonstrate will provide an equal or greater degree of safety for employees compared to the methods, materials, or designs specified in the standard. The proposed definition is identical to the definitions in OSHA's general industry and construction standards on fall protection. It is essentially the same as the definition in the shipyard employment standard on fall protection. A crucial element of the definition is that it places the burden on the employer to demonstrate equivalence. The term is not defined in the national consensus standards pertinent to fall protection.

Free fall. OSHA proposes to define the term "free fall" to mean the act of falling before the personal fall protection system begins to apply force to arrest the fall. The proposed definition is essentially the same as the definition in OSHA's general industry, construction, and shipyard employment standards on fall protection. It is also consistent with national consensus standards, including ANSI/ASSE Z359.0–2007 and ANSI/ASSE A10.32–2004. OSHA notes that it proposes to use the phrase personal fall *protection* system in this proposed rule, rather than personal fall *arrest* system which is used in some of the above-mentioned standards, to indicate clearly that the requirements, when the term is used, apply to both personal fall arrest systems and positioning systems.

Free fall distance. OSHA proposes to define the term "free fall distance" to mean the vertical displacement of the fall arrest attachment point on the employee's body belt or body harness between onset of the fall and just before the system begins to apply force to arrest the fall. This distance excludes deceleration distance as well as lifeline and lanyard elongation, but includes any deceleration device slide distance or self-retracting lifeline/lanyard extension before the devices operate and fall arrest forces occur. The proposed definition is essentially the same as the definition in OSHA's general industry, construction, and shipyard employment standards on fall protection. It is also consistent with the national consensus standards, ANSI/ASSE Z359.0–2007 and ANSI/ASSE A10.32–2004.

Lanyard. OSHA proposes to define the term "lanyard" to mean a flexible line of rope, wire rope, or strap which generally has a connector at each end for connecting the body belt or body harness to a deceleration device, lifeline, or anchorage. The proposed definition is identical to the definition in OSHA's construction and shipyard employment standards on fall protection, and is consistent with the general industry standard on fall protection. It is also essentially the same as the national consensus standards, ANSI/ASSE Z359.0–2007 and ANSI/ASSE A10.32–2004.

Lifeline. OSHA proposes to define a "lifeline" to mean a component consisting of a flexible line for connection to an anchorage at one end to hang vertically (vertical lifeline), or for connection to anchorages at both ends to stretch horizontally (horizontal lifeline), and which serves as a means for connecting other components of a personal fall protection system to the anchorage(s). The proposed definition is essentially the same as OSHA's general industry, construction, and shipyard employment standards on fall protection. Those standards use the words "fall arrest" rather than "fall protection" as used in this proposed rule because they were only applicable to fall arrest systems whereas this proposed rule has application to other personal fall protection systems. It is also essentially the same as the national consensus standards ANSI/ASSE Z359.0–2007 and ANSI/ASSE A10.32–2004.

Personal fall arrest system. OSHA proposes to define the term "personal fall arrest system" to mean a system used to arrest an employee in a fall from a work level. It consists of an anchorage, connector, and a body harness, and may include a lanyard, deceleration device, lifeline, or suitable combination of these. The definition proposed is identical to OSHA's general industry, construction, and shipyard employment standards on fall protection, except that those standards included a body belt as a part of the definition of a personal fall arrest system. Body belts, which have been phased out due to safety reasons, were included in those definitions to allow their use until they were banned. The ban on body belts as part of a personal fall arrest system, took place on January 1, 1998, for the construction industry and shipyard employment. The proposed definition is also consistent with the national consensus standards, ANSI/ASSE Z359.0–2007 and ANSI/ASSE A10.32–2004. These consensus standards, like the existing OSHA standards and the proposed standard, require the use of body harnesses in personal fall arrest systems. OSHA notes that a ladder safety system is not considered a *personal fall arrest* system within the meaning of this proposed definition even though it is designed to arrest a fall. Therefore, the use of a body belt in a ladder safety system is permitted.

Personal fall protection system. OSHA proposes to define the term "personal fall protection system" to mean a system used to protect an employee from falling, or that safely arrests an employee's fall, should a fall occur. Examples include: a personal fall arrest system, a positioning system, or a travel restraint system. The term is not defined in either the existing OSHA standards or in the national consensus standards.

Positioning system (sometimes called a work positioning system). OSHA proposes to define the term "positioning system" to mean a system of equipment and connectors that, when used with its body belt or body harness, allows an employee to be supported on an elevated vertical surface, such as a wall or windowsill, and to work with both hands free. The proposed definition is essentially the same as the definition in OSHA's construction and shipyard employment standards on fall protection. It is also essentially the same as the national consensus standards, ANSI/ASSE Z359.0–2007 and ANSI/ASSE A10.32–2004.

Qualified. The proposed definition of "qualified" describes a person who, by possession of a recognized degree, certificate, or professional standing, or who by extensive knowledge, training,[8] and experience has successfully demonstrated the ability to solve or resolve problems relating to the subject matter, the work, or the project. The proposed definition is consistent with the definition in the OSHA's construction industry standards at § 1926.32(m), and the shipyard employment standard for PPE at § 1915.151(b). It is also consistent with the definition being proposed today for the general industry standards in subpart D, Walking-Working Surfaces. The definition differs from that used in the general industry standard at § 1910.66. Specifically, the definition in Appendix C of § 1910.66 requires that the qualified person have a degree, certification or professional standing *and* (as opposed to "or") also have extensive knowledge, training, and experience. To meet the definition, a person would most likely need to be an engineer; this is not the case with the definition proposed in this standard. Like the definition in the construction

[8] "Training" may include informal, or on-the-job, training.

and the shipyard employment rules, OSHA is emphasizing the need to be qualified in the subject matter—personal fall protection systems—which, in some cases, may involve their design and use. As long as the individual meets the elements of the definition, he or she may be considered a qualified person for the purpose of subpart I. The proposed definition is also identical to that used in the national consensus standard, ANSI/ASSE A10.32, but differs from ANSI/ASSE Z359.0–2007 standard which also appears to require that the qualified person be an engineer. The language proposed here will ensure consistency with the definitions in OSHA's fall protection rules for construction and shipyard employment.

Rope grab. OSHA proposes to define the term "rope grab" to mean a deceleration device that travels on a lifeline and automatically, by friction, engages the lifeline and locks to arrest the fall of an employee. A rope grab usually employs the principle of inertial locking, cam/lever locking, or both. The definition proposed is the same as the definition in OSHA's general industry, construction, and shipyard employment standards on fall protection. It is also the same as the national consensus standard, ANSI/ASSE A10.32–2004. The term "rope grab" is not individually defined in ANSI/ASSE Z359.0–2007; however, that consensus standard defines the term "fall arrester" using essentially the same definition OSHA uses here. Additionally, the consensus standard identifies a "rope grab" as one example of a fall arrester.

Self-retracting lifeline/lanyard. OSHA proposes to define the term "self-retracting lifeline/lanyard" to mean a deceleration device containing a drum-wound line which can be slowly extracted from, or retracted onto, the drum under slight tension during normal movement by the employee, and after onset of a fall, automatically locks the drum and arrests the fall. The proposed definition is consistent with the definition in OSHA's general industry and construction standards on fall protection, and is also consistent with the national consensus standards, ANSI/ASSE Z359.0–2007 and ANSI/ASSE A10.32–2004. OSHA notes that the ANSI/ASSE Z359.0 standard defines the term "self-retracting lanyard" rather than "self-retracting lifeline/lanyard."

Snaphook. OSHA proposes to define a "snaphook" to mean a connector comprised of a hook-shaped body with a normally closed gate or similar arrangement that may be manually opened to permit the hook to receive an object and that, when released, automatically closes and locks to retain the object. Opening the snaphook requires two separate actions. The proposed definition includes a note explaining that there are two types of snaphooks—the *locking type* (also called self-locking, double-locking, or automatic-locking) and the *non-locking type* (or manual locking). The locking type snaphook is one with a self-closing and self-locking gate that remains closed and locked until intentionally unlocked and opened for connection or disconnection. The non-locking type has a self-closing gate that remains closed, but not locked (unless purposely locked by the user), until intentionally opened for connection or disconnection. This rule would not allow use of non-locking type snaphooks.

The proposed definition is consistent with OSHA's general industry and construction standards on fall protection, and is also consistent with the national consensus standards ANSI/ASSE Z359.1–2007 and ANSI/ASSE A10.32–2004. These other OSHA standards also only allow use of locking-type snaphooks.

Travel restraint (tether) line. The proposed definition of the term "travel restraint line" is a rope, wire rope, or lanyard used to transfer forces from a body support to an anchorage or anchorage connector in a travel restraint system. The proposed definition is new to general industry and is based on the ANSI/ASSE Z359.0–2007 standard, and is consistent with the similar term "restraint (tether) line" used in OSHA's shipyard employment standard on fall protection and in the national consensus standard, ANSI/ASSE A10.32–2004. The purpose of a travel restraint line is to prevent an employee from reaching a fall hazard. These lines need not be designed to withstand forces resulting from a fall. (*See* "travel restraint system.")

Travel restraint system. OSHA proposes to define the term "travel restraint system" to mean a combination of an anchorage, anchorage connector, lanyard (or other means of connection), and body support intended to be used by an employee to limit travel in such a manner as to prevent exposure to a fall hazard. Travel restraint systems must be used such that they do not support any portion of the employee's weight. The proposed definition is new to the general industry standards, and is based on the ANSI/ASSE Z359.0–2007 standard, and is consistent with similar terms (*i.e.,* "restraint (tether) line") used in OSHA's shipyard employment standard on fall protection and in the national consensus standard, ANSI/ASSE A10.32–2004. The term is not defined in the OSHA's construction industry standard on fall protection.

Window cleaner's positioning system. OSHA proposes to define the term "window cleaner's positioning system" to mean a system consisting of a window cleaner's belt and window cleaner's belt anchors.

Window cleaner's belt. OSHA proposes to define the term "window cleaner's belt" to mean a belt that consists of a waist-belt, an integral terminal runner or strap, and belt terminals. The end terminals of the belt are attached to the window cleaner's belt anchors (window anchors).

Window cleaner's belt anchors (window anchors). OSHA proposes to define "window cleaner's belt anchors" to mean specifically designed fall-preventing attachment points, permanently affixed to a window frame or to a building part immediately adjacent to the window frame, for direct attachment of the terminal portion of a window cleaner's belt. The proposed definitions of terms related to window cleaner's fall protection systems are based on the national consensus standard for Window Cleaning Safety, IWCA I–14.1–2001. The term "belt terminal" which is also a part of the window cleaner's belt was discussed above. These terms are not used in existing OSHA standards because there are no standards specifically applicable to window cleaning operations.

Paragraph (c) General Requirements

Proposed paragraph (c) contains general provisions applicable to all personal fall protection systems. This proposed paragraph establishes criteria for the most generic, common components, such as belts, lanyards, and harnesses used in fall protection systems. More specific criteria are established in proposed paragraphs (d) and (e) of § 1910.140 for personal fall arrest and positioning systems. All of the provisions proposed in paragraph (c) are based on requirements in either existing OSHA standards pertinent to fall protection or national consensus standards. The OSHA standards used include Appendix C of § 1910.66, Powered platforms for building maintenance, of the general industry standards; § 1926.502, Fall protection systems criteria and practices, of the construction standards; and §§ 1915.159, Personal fall arrest systems (PFAS), and 1915.160, Positioning device systems, of the shipyard employment standards.[9] The national

[9] Referred to hereafter as the "general industry, construction, and shipyard employment standards on fall protection."

consensus standards used in developing proposed paragraph (c) include ANSI/ASME Z359.1–2007, Safety Requirements for Personal Fall Arrest Systems, Subsystems and Components; ANSI/ASME Z359.3, Safety Requirements for Positioning and Travel Restraint Systems; ANSI/ASME A10.32–2004, Fall Protection Systems (for Construction); and ANSI/IWCA I–14.1–2001, Window Cleaning Safety.

In paragraphs (c)(1) and (c)(2), OSHA is proposing that connectors used in personal fall protection systems be made of drop-forged, pressed, or formed steel or equivalent materials, and that the materials be protected from corrosion. In addition, the surfaces and edges of connectors are to be smooth. These requirements are intended to ensure that connectors retain the necessary strength characteristics for the life of the fall protection system under expected use conditions and that the surfaces and edges do not cause damage to the attached belt or lanyard. OSHA has already adopted this approach in paragraphs (c)(1) and (c)(2), section I, Appendix C of § 1910.66; paragraphs (d)(1), (d)(2), (e)(3), and (e)(4) of § 1926.502; and paragraphs (a)(1) and (a)(2) of § 1915.159. Similar requirements are also found in the national consensus standards, ANSI/ASSE Z359.1–1992 (R2002) and ANSI/ASSE A10.32–2004.

In paragraph (c)(3) OSHA is proposing that where vertical lifelines are used, each employee must be attached to a separate lifeline. OSHA believes that allowing more than one employee on the same vertical lifeline would create additional hazards. For example, if one employee fell, the other attached employee might be pulled off balance, causing him or her to fall. OSHA has already adopted this approach in paragraphs (c)(3) and (e)(5), section I, Appendix C of § 1910.66; paragraph (d)(10) of § 1926.502; and paragraph (b)(1) of § 1915.159. A similar requirement is also found in the national consensus standard, ANSI/ASSE A10.32–2004.

Proposed paragraphs (c)(4) through (c)(6) relate to the strength of lanyards and lifelines. In paragraph (c)(4) OSHA is proposing that lanyards and vertical lifelines have a minimum breaking strength of 5,000 pounds (22.2 kN). Paragraphs (c)(5) and (c)(6) address self-retracting lifelines and lanyards. In paragraph (c)(5) OSHA proposes that self-retracting lifelines and lanyards that limit free fall to 2 feet (0.61 m) or less be capable of sustaining a minimum tensile load of 3,000 pounds. In paragraph (c)(6) OSHA proposes that self-retracting lifelines and lanyards that do not limit free fall to 2 feet (0.61 m) or less, as well as rip-stitch lanyards, and tearing and deforming lanyards must be capable of sustaining a minimum tensile load of 5,000 pounds. The different strengths are appropriate because the dynamic forces associated with falls increase with the distance of the free fall, and OSHA believes the proposed levels provide a reasonable factor of safety. OSHA has already adopted this approach in the general industry, construction, and shipyard employment standards on fall protection. The proposed requirements are also consistent with the requirements in ANSI/ASSE Z359.1–2007 and ANSI/ASSE A10.32–2004. However, neither of the consensus standards contain a separate provision (as OSHA does in proposed paragraph (c)(6)) directed to self-retracting lanyards and lifelines that *do not* limit free fall to 2 feet or less. OSHA requests specific comment on whether the requirement in paragraph proposed (c)(6) is necessary, since it is essentially the same as the requirement in proposed paragraph (c)(4). That is, if OSHA did not finalize the requirement proposed at paragraph (c)(6), would it be clear from (c)(4) that all lanyards and lifelines, except those that limit free fall to 2 feet or less, must have a breaking strength of 5,000 pounds?

One commenter to the 1990 proposal suggested that the high strength requirements for lanyards and lifelines would be hard to maintain. OSHA realizes some wear will occur during normal use of lanyards and lifelines in the workplace. Ultraviolet radiation, water, and dirt reduce the strength of lanyards and lifelines. However, wear must never be allowed to reach the point where equipment performance might be compromised. This is one reason why it is important to inspect equipment before each use (and, if necessary, remove it from use) as required in proposed paragraph (c)(18), and to protect certain components, including lanyards, from being cut, abraded, or melted, as required in proposed paragraph (c)(20).

Another concern related to strength reduction is the use of knots in lanyards and lifelines. OSHA is aware that the use of knots in lanyards and vertical lifelines can *sometimes* reduce breaking strength. For this reason, OSHA considered proposing a ban on knots, with the exception of knots at the ends of the components. Such a ban would be consistent with requirements in the national consensus standards. For example, ANSI/ASSE Z359.1–2007 (section 7.2.1) prohibits knots, stating, "No knots shall be tied in lanyards, lifelines, or anchorage connectors. Sliding-hitch knots shall not be used in lieu of fall arresters." Likewise, ANSI/ASSE A10.32–2004 (section 3.7.3) prohibits the use of knots, except as a "stop" at the end of a lifeline. Rather than proposing an outright ban on the use of knots, OSHA is requesting comments on whether it should prohibit knots or require that a competent person inspect all knots. Commenters should provide suggested language and rationale to support their positions.

Comments and testimony from the 1990 rulemaking on the use of knots both supported and objected to the use of knots. For example, some commenters (Exs. OSHA–S057–2006–0680–0048, –0083, and –0061) objected to the use of knots and suggested that OSHA require that ends of lanyards and lifelines be terminated in swedges or splices. These commenters felt that knots significantly reduced the strength of the line and that it is difficult for employees to learn to tie reliably.

Other commenters (Ex. OSHA–S057–2006–0680–0118) supported the use of knots, reasoning that some knots will retain up to 90 percent of the original rope strength. Commenters also noted that some ropes could lose more than 10 percent of their original breaking strength and still meet OSHA's proposed 5,000 pound (22.2 kN) requirement. Testimony at the public hearing also supported the idea that knots could be used to terminate lifelines and lanyards safely (Ex. OSHA–S041–2006–0666–1252, p. 389–391, 416–419). The proposal reflects the information currently available to the Agency—that knots can be used safely in some circumstances, so employers should be allowed the flexibility to use knots as long as they verify that proposed strength requirements for the entire rope have been met.

Proposed paragraphs (c)(7) through (c)(10) establish criteria for D-rings and snaphooks. In paragraph (c)(7) OSHA is proposing that D-rings and snaphooks be capable of sustaining a minimum tensile load of 5,000 pounds (22.2 kN). In paragraph (c)(8), OSHA proposes that all D-rings and snaphooks be proof-tested to 3,600 pounds (16 kN) without cracking, breaking, or incurring permanent deformation. The 3,600 pounds (16 kN) criterion is based on the need to meet a 2:1 safety factor for the use of these components with body harnesses (which limit maximum arresting forces to 1,800 pounds (8 kN)). OSHA has already adopted this approach in the general industry, construction, and shipyard employment standards on fall protection. Similar requirements are also found in the

national consensus standards, ANSI/ASSE Z359.1–2007 and ANSI/ASSE A10.32–2004.

In paragraph (c)(9) OSHA proposes to require the use of locking snaphooks, thus prohibiting non-locking snaphooks for any personal fall protection systems. Locking snaphooks require two separate, consecutive actions to open, which reduces the likelihood of inadvertent opening. OSHA has already adopted this approach in the construction and shipyard employment standards on fall protection. The prohibition on the use of non-locking snaphooks in existing OSHA standards for the construction and shipyard employment sectors went into effect on January 1, 1998. In addition, national consensus standards, including ANSI/ASSE Z359.1–2007 and ANSI/ASSE A10.32–2004, only permit the use of locking snaphooks. Evidence in the 1990 rulemaking also showed widespread support for a prohibition on non-locking snaphooks, which is particularly significant in light of the fact that these comments were made more than 17 years ago. Therefore, OSHA believes that there is no reason to propose any type of extended or delayed effective date for this provision. If there are reasons for an extended or delayed effective date, they should be submitted to the record.

Paragraph (c)(10), like other existing OSHA standards, proposes to require that, unless the snaphook is designed for the following connections, it shall not be engaged directly to: webbing, rope, or wire rope; another snaphook; a D-ring to which another snaphook or connector is attached; a horizontal lifeline; or any object that is incompatibly shaped or dimensioned in relation to the snaphook such that unintentional disengagement could occur if the connected object depresses the snaphook gate and causes it to open. OSHA has already adopted this approach in the construction and shipyard employment standards on fall protection. Both ANSI/ASSE Z359.1–2007 and ANSI/ASSE A10.32–2004 consensus standards also contain a number of separate requirements prohibiting these connections. In addition, section 7.2 (Equipment Rigging and Use) of ANSI/ASSE Z359.1 addresses snaphook and carabiner connections and other concerns. Explanatory notes in that section contain additional, helpful material about connections.

In paragraph (c)(11) OSHA proposes to require that horizontal lifelines be designed, installed, and used under the supervision of a qualified person, and that they be part of a complete personal fall arrest system that maintains a safety factor of two. OSHA believes the safety factor of two provides adequate protection and has already adopted this approach in the general industry, construction, and shipyard employment standards on fall protection. An essentially similar requirement is also found in the national consensus standard, ANSI/ASSE A10.32–2004. The other consensus standard pertinent to fall protection, ANSI/ASSE Z359.1–2007, does not include specific requirements for horizontal lifelines because the standard does not cover them. However, the Z359.1 standard (section 3.1.4) states, "A PFAS [personal fall protection system] which incorporates a horizontal lifeline (outside the scope of this standard) shall be evaluated in accordance with acceptable engineering practice to determine that such system will perform as intended." OSHA notes that horizontal lifelines present special problems in application. For example, they allow a potentially longer fall distance than some other fall protection devices. In addition, forces applied in a perpendicular direction to a horizontal lifeline create much larger forces at the anchorages. These and other concerns relative to the use of horizontal lifelines support the need for proposed paragraph (c)(11). As a point of clarification, OSHA notes that there could be more than one qualified person involved in the process; *i.e.,* the qualified person who designs and installs the system may be different than the qualified person who supervises the use of the system.

In paragraph (c)(12) OSHA proposes to require that anchorages used for attachment to personal fall protection equipment be independent of any anchorage being used to support or suspend platforms. This requirement is intended to ensure that if the anchorage holding other equipment (such as a powered platform) fails, the employee will be still be protected by the separate, independent anchorage to which the fall protection system is secured.

In paragraph (c)(13), OSHA proposes that anchorages be capable of supporting at least 5,000 pounds (22.2 kN) for each employee attached or that they be designed, installed, and used under the supervision of a qualified person as part of a complete fall protection system maintaining a safety factor of two. The proposed provision does not apply to window cleaner's belt anchors, addressed separately in proposed paragraph (e) of this section, because those positioning systems are unique. OSHA has already adopted the approach proposed here in the general industry, construction, and shipyard employment standards for fall protection. Similar requirements are also found in the national consensus standards pertinent to fall protection, including ANSI/ASSE Z359.1–2007 and ANSI/ASSE A10.32–2004, as well as the ANSI/IWCA I–14.1–2001 standard for window-cleaning safety. In particular, section 7.2.3 of the Z359.1 standard states:

> Anchorages selected for PFAS shall have a strength capable of sustaining static loads, applied in the directions permitted by the PFAS, of at least: (a) two times the maximum arrest force permitted on the system, or (b) 5,000 pounds (22.2kN) in the absence of certification. When more than one PFAS is attached to an anchorage, the anchorage strengths set forth in (a) and (b) above shall be multiplied by the number of personal fall arrest systems attached to the anchorage.

In the explanatory material for this provision, ANSI notes: "The 5,000 pound (22.2kN) anchorage referred to here is the same as that required by OSHA in § 1910.66—Powered platforms for building maintenance. An assumption is made that the 5,000 pound (22.2kN) strength level has been established and, therefore, certification is not required."

The strength of fall protection anchorages has generated considerable comment in previous OSHA rulemakings. OSHA's position at this time is the same as it was in the earlier rulemakings: the level of strength required by this proposal is necessary to provide a reasonable margin of safety for employees. For clarification, OSHA notes that it is not requiring a 5,000 pound (22.2 kN) anchorage point in every situation. If an employer cannot find or develop an anchor point capable of supporting a 5,000 pound (22.2 kN) load, then an anchor point of lesser strength may be used *only if* it is both part of a complete fall protection system maintaining a safety factor of at least two, and it is designed, installed, and used under the supervision of a qualified person. The Agency anticipates that employers who cannot achieve a 5,000 pound (22.2 kN) anchorage strength will be able to meet the two to one safety factor. As OSHA noted above with respect to proposed paragraph (c)(11), an employer may use more than one qualified person to comply with this requirement. For example, some employers may choose to have an outside firm design an appropriate system, and an in-house qualified person supervise its use.

In paragraph (c)(14) OSHA proposes that restraint lines used in travel restraint systems be capable of supporting at least a 5,000 pound (13.3

kN) tensile load. The Agency is proposing the 5,000 pound requirement to be consistent with other requirements in this section. (For example, *see* proposed paragraphs (c)(4), (c)(6), and (c)(7).) This requirement provides an important safety factor if a restraint line is ever used as a lifeline; for example, if it is not rigged properly and a fall occurs, the restraint line would effectively become a lifeline and would have to meet the 5,000 pound requirement. Existing OSHA standards pertinent to fall protection do not include specific requirements for travel restraint lines, but section 3.11 of the ANSI/ASSE A10.32–2004 standard specifies that component parts of travel restraint systems, including anchorages, be designed to meet the requirements of personal fall arrest equipment. The ANSI/ASSE Z359.3–2007 standard for positioning and travel restraint systems similarly requires that positioning and travel restraint lanyards have a minimum breaking strength of 5,000 pounds (22.2kN).

In paragraph (c)(15) OSHA proposes to require that lifelines and carriers be made of materials other than natural fiber rope. Additionally, proposed (c)(15) requires that where polypropylene rope is used, it must contain an ultraviolet (UV) light inhibitor. The proposed provision is consistent with OSHA's general industry standard on powered platforms and the shipyard employment standard. Both of these standards require that ropes and straps (webbing) used in lanyards, lifelines, and strength components of body belts and body harnesses be made from synthetic fibers or wire rope. OSHA's construction industry standard is the same except that it does not make reference to wire rope.

None of the existing OSHA standards, however, address carriers, nor do they require that the polypropylene rope contain a UV light inhibitor. The proposed provision is consistent with requirements in section 3.2.3 of ANSI/ASSE Z359.1–2007 and with section 3.8 of ANSI/ASSE A10.32–2004. Section 6.8 of the national consensus standard for window-cleaning safety, ANSI/IWCA I–14.1–2001, prohibits ropes made entirely of polypropylene. Also, section 14.2.3 of ANSI/IWCA I–14.1–2001 standard requires all rope and webbing used in suspending the seat board (of rope descent systems) be synthetic fiber, preferably nylon or polyester, with a rated strength of 5,000 pounds. For fall protection, the ANSI/IWCA I–14.1–2001 standard requires compliance with ANSI/ASSE Z359.1 standard.

The UV light inhibitor provision was added to this proposal in response to comments received in the 1990 proposed rulemaking (Ex. OSHA–S057–2006–0680–0083), pointing out that sunlight can cause severe deterioration in polypropylene rope. OSHA recognizes that ultraviolet degradation can be a serious problem, but also believes that polypropylene rope has some advantages over other synthetic materials. Polypropylene is strong, flexible, and may be less costly than ropes made of some other materials. Many of the newer polypropylene ropes are made with an UV light inhibitor which reduces the strength degradation problem. For these reasons, the Agency believes the proposed provision offers an appropriate level of safety without unnecessarily sacrificing flexibility.

In paragraph (c)(16), OSHA proposes that all personal fall protection systems and their components be used for employee fall protection only, and not for any other purpose, such as hoisting equipment or materials. This means that those systems or components may not be used as material or equipment hoist slings, bundle ties, or for other such purposes. OSHA has already adopted this approach in its general industry, construction, and shipyard employment standards on fall protection. In the powered platform standard, OSHA did not include the phrase "and not used to hoist materials," which appears in the shipyard employment and construction standards. OSHA believes the added phrase clarifies the intent of the provision.

In paragraph (c)(17), OSHA proposes that all fall protection systems or any of their components that have been subjected to impact loading (as distinguished from static load testing) be removed from service immediately. A removed system or component may not be used again until a competent person inspects the equipment and determines that it is undamaged and suitable for reuse. By this proposed language, OSHA is recognizing that impact loading may adversely affect the integrity of a fall protection system, but that there are many factors that can affect a system's potential capacity for reuse as fall protection. These include the employee's weight and the type of deceleration device used, among others. This proposed provision is intended to ensure that employers will implement procedures for inspection and evaluation of equipment that will prevent the reuse of damaged equipment. OSHA has not, however, adopted the suggestion of one commenter in the 1990 proposed rulemaking (Ex. OSHA–S057–2006–0680–0048) that the standard allow only the *manufacturer* to inspect systems to determine if they are suitable for reuse. OSHA believes that any competent person could inspect the system effectively because all competent persons must be capable of determining dangerous or hazardous conditions in any fall protection system or component. OSHA has already adopted the proposed approach in the general industry, construction, and shipyard employment standards on fall protection. The proposed requirement is also consistent with the ANSI/ASSE Z359.1–2007 (section 5.3.4) and ANSI/ASSE A10.32–2004 (section 3.4) consensus standards.

OSHA solicits comments on whether the proposed approach provides adequate protection, or whether the final standard should require the destruction of ropes, lanyards, belts, and harnesses once they have been subjected to impact loading. Impact loading can cause damage to fibers that cannot be easily discovered, and these components are relatively inexpensive. OSHA is therefore still considering revising the proposed requirement to require the destruction and removal of ropes, lanyards, belts, and harnesses once they have been subject to impact loading.

In paragraph (c)(18) OSHA proposes that fall protection equipment be inspected for mildew, wear, damage, and other deterioration before each use. Components showing such damage must be removed from service if their function or strength has been adversely affected. The intent of this requirement, like that of proposed paragraph (c)(17), is to ensure that defective or weakened equipment is removed from service if the equipment's performance could be adversely affected. OSHA has already adopted this approach in its general industry, construction, and shipyard employment standards on fall protection. The proposal is also consistent with the consensus standards, ANSI/ASSE Z359.1–2007 (section 6.1) and ANSI/ASSE A10.32–2004 (section 6.3).

In paragraph (c)(19), OSHA proposes that ropes, belts, lanyards, lifelines, and harnesses be compatible with all connectors used. OSHA is proposing this requirement because it believes the use of incompatible equipment leads to rollout. Rollout is a process by which a snaphook or carabiner unintentionally disengages from another connector or object to which it is coupled, possibly resulting in injury or death. OSHA has already adopted this approach in its shipyard employment standards on fall protection. Additionally, both the ANSI/

ASSE Z359.1–2007 and ANSI/ASSE A10.32–2004 consensus standards address the need for compatibility of equipment. For example, the explanatory material for section 3.2.6.2 of the Z359.1 standard states, "An effort should be made to encourage compatible connector couplings." Requirements in sections 7.1 and 7.2 of that standard also address the issue of compatibility, as do requirements in the ANSI/ASSE A10.32–2004 standard (sections 4.1.1 and 4.4.2).

In paragraph (c)(20), OSHA proposes that ropes, belts, lanyards, and harnesses used for personal fall protection be protected from being cut, abraded, melted, or otherwise damaged. These types of damage could cause the components to lose strength and fail. OSHA has already partially adopted this approach in its construction and shipyard employment standards on fall protection. The general industry standard on fall protection for powered platforms provides guidelines (*see* Appendix C, section III, paragraph (f) of § 1910.66) for the inspection of personal fall arrest equipment, and emphasizes the need to remove equipment that has been subject to cuts, abrasion, and other damage. Similar provisions are found in ANSI/ASSE Z359.1–2007 (section 7) and ANSI/ASSE A10.32–2004 (section 3.7) standards pertinent to lifelines and lanyards. The existing OSHA requirements apply to lifelines and lanyards only, whereas the proposed requirement would apply to all ropes, belts, and harnesses because OSHA believes all of these components should be protected from being cut, abraded, melted or exposed to similar hazards.

Because an employee suspended after a fall may be exposed to serious injury, including suspension trauma, OSHA is proposing in paragraph(c)(21) to require the employer to provide for prompt rescue. To meet this requirement, the employer must evaluate the availability of rescue personnel, ladders, or other rescue equipment. In some situations, it may be appropriate to use equipment; for example, a mechanical device that has descent capability which allows employees to rescue themselves after a fall has been arrested. In other situations, a suspended employee may not be able to reach a work level independently, so the employer must ensure the ability to rescue the employee promptly.

In recognition of hazards confronting employees, OSHA developed a Safety and Health Information Bulletin (SHIB) addressing the hazards associated with suspension trauma/orthostatic intolerance (SHIB 03–24–2004, available at *http://www.osha.gov/dts/shib/shib032404.html).* The SHIB states in part:

> Orthostatic intolerance may be experienced by workers using fall arrest systems. Following a fall, a worker may remain suspended in a harness. The sustained immobility may lead to a state of unconsciousness. Depending on the length of time the suspended worker is unconscious/immobile and the level of venous pooling, the resulting orthostatic intolerance may lead to death. While not common, such fatalities often are referred to as "harness-induced pathology" or "suspension trauma."

OSHA has already adopted this approach in the general industry, construction, and shipyard employment standards on fall protection. The proposal is also consistent with the national consensus standard, ANSI/ASSE A10.32–2004 (section 6.2.1). Additionally, section 7.3 of the ANSI/ASSE Z359.1–2007 standard addresses the need to be trained in rescue. Finally, the need for rescue is evident by the development of a new American National Standard entitled "Safety Requirements for Assisted-Rescue and Self-Rescue Systems, ANSI/ASSE Z359.4–2007."

In paragraph (c)(22), OSHA proposes to require all personal fall protection systems to be worn with the attachment point in the center of the wearer's back near the shoulder level or above the wearer's head. An exception is provided that allows the attachment point to be located in the pre-sternal position if the free fall distance is limited to 2 feet (0.6 m) or less and the fall arrest forces are limited to 900 pounds (4 kN). OSHA has already adopted this approach in the general industry, construction, and shipyard employment standards on fall protection, except that none of these OSHA standards permit the attachment point to be located in the pre-sternal position. The exception for the pre-sternal position proposed in this standard reflects the new language in ANSI/ASSE Z359.1–2007 (section 3.2.2.5a). The proposal is also consistent with ANSI/IWCA I–14.1–2001.

OSHA believes the exception is necessary to allow flexibility to attach in front during certain activities (such as climbing or using rope descent systems for window washing) are underway to make self-rescue possible, as some commenters argued in the 1990 proposed rulemaking. One witness, Mr. Terry Schmidt, testified that European standards already allowed an attachment point in the pre-sternal position (Ex. OSHA–S041–2006–0666–1252, p. 216). Another witness, Mr. Weinel, commented:

> I'm very much a believer in the front, I think the term used was "mid-sternal" connection. This will keep me, as the person in trouble, oriented upright, facing the rope, where I can perform self-rescue. (Tr. 363.)

OSHA believes that an attachment point in the pre-sternal position (when the free fall distance is limited to 2 feet (0.6 m) or less) would have only a minimal effect on the distribution of arresting forces, yet would provide an overall advantage of easier self-rescue in some specialized applications such as confined spaces, window cleaning, and climbing activities. Again, the location of the attachment point in the pre-sternal position is limited to those situations in which the free fall distance is kept to 2 feet (0.6 m) or less and the maximum arresting forces are limited to 900 pounds (4 kN), thereby reducing risk of serious neck and back injury.

Paragraph (d) Personal Fall Arrest Systems

Proposed paragraph (d) establishes specific requirements applicable when personal *fall arrest* systems are used. These new, specific requirements are in addition to the general requirements in proposed paragraph (c) that apply to all types of personal fall protection equipment. The proposed requirements are consistent with the national consensus standards, ANSI/ASSE Z359.1–2007 (section 3) and ANSI/ASSE A10.32–2004.

Proposed paragraph (d)(1) establishes criteria for the *performance* of personal fall arrest systems. Proposed paragraph (d)(2) establishes criteria for the *use* of personal fall arrest systems. The requirements proposed in paragraph (d) are based on requirements in existing OSHA general industry, construction, and shipyard employment standards on fall protection, as well as national consensus standards, including ANSI/ASME Z359.1–2007, Safety Requirements for Personal Fall Arrest Systems, Subsystems and Components; and ANSI/ASME A10.32–2004, Fall Protection Systems (for construction) standards.

The performance criteria proposed in paragraph (d)(1) are nearly identical to those that are already required by other OSHA fall protection standards. For the most part, they were first promulgated by OSHA in Appendix C to § 1910.66 (*see* 54 FR 31445, July 28, 1989). The preamble to that standard anticipated that those criteria would eventually be used in a more broadly applicable general industry standard:

> The comments and data on fall arrest systems which were submitted to the record of the powered platforms rulemaking are also being used in the development of the generic rule. OSHA anticipates that the provisions on personal fall arrest systems in Appendix C,

section I, of the powered platforms standard will be consistent with the proposed requirements for those systems in the proposed generic rule. (54 FR 31450)

The preamble also provides detailed explanations of the performance criteria proposed here, and of their bases.

Proposed paragraph (d)(1)(i) limits the maximum arresting force on an employee to 1,800 pounds (8 kN) when a body harness is used. The maximum arrest force of 1,800 pounds (8 kN) criterion is discussed extensively in the preamble to the final rulemaking for § 1910.66. In this preamble, OSHA noted that the proposal (at 50 FR 2890) included "a force limit of 10 times the worker's weight or 1,800 pounds (8 kN) whichever is less," and that "[t]his was consistent with ANSI A10.14–1975 (Ex. 11–1), and a NBS [National Bureau of Standards, now the National Institute for Science and Technology] report (Ex. 11–2)." OSHA also described in the final rule (at 54 FR 31450) a comment from the United States Technical Advisory Group (USTAG), an advisory group representing both government and private interests:

USTAG recommended that maximum arrest force for body belts not exceed 900 pounds. USTAG states that "empirical data from impact loading of humans and animals suggests that injury threshold may be in the neighborhood of 10 g's or even lower depending on many variables" (Ex 8–33). USTAG cited British standards which restrict the use of body belts to 5 g's for a 180 pound (82 kg) person (the equivalent of 900 pounds (4 kN) of force). Based on the record, OSHA agrees with USTAG that a maximum arresting force of 1,800 pounds (8 kN) is acceptable when using a body harness but not acceptable when using a body belt.

OSHA notes that USTAG's recommendation applied to the maximum permitted force for positioning systems, not to fall arrest equipment * * * however, that there is no reason to distinguish these applications in terms of the permitted force limit.

(*See* 54 FR 31450.)

At the time § 1910.66 was promulgated, the ANSI Z359.1–1992 standard covering personal fall arrest systems did not yet exist. When the ANSI standard was published in 1992 and reaffirmed in 2002, it contained (section 3.1.2) the same requirement limiting maximum arresting forces to 1,800 pounds (8 kN) when a body harness was used in the personal fall arrest system. Both the 1992 and 2002 ANSI standards provide the following explanation of the 1,800-pound (8-kN) maximum arresting force (MAF) limit:

E3.1.2 * * * The 1,800 pound (8 kN) MAF criteria included in this standard is based on the following considerations. In the mid-1970's medical information developed in France confirmed earlier United States research which observed that approximately 2,700 pounds (12 kN) is the threshold of significant injury incidence for physically fit individuals subjected to drop impacts when wearing harnesses. The French arbitrarily halved the above force and established 1,350 pounds (6 kN) as their national standard for MAF in PFAS. Canada's Ontario Ministry of Labor reviewed this information and elected to establish 1,800 pounds (8 kN) for MAF. This MAF has been in effect since 1979 in the Ontario Provincial standard. Since that time there have been no reported deaths or serious injuries associated with the arresting of accidental falls of individuals. In addition, ISO/TC94/SC4, in working drafts, has established the 1,800 pounds (8 kN) limit on MAF. On the basis of this information, 1,800 pounds (8 kN) is considered the appropriate MAF for inclusion in this standard where harnesses are to be used in arresting falls.

Thus, the most current ANSI Z359.1 standard (section 3.1.2) continues to prescribe the 1,800 pound (8 kN) limit for the same reasons explained above.

Proposed paragraph (d)(1)(ii) limits the maximum deceleration distance to 3.5 feet (1.07 m). The deceleration distance of 3.5 feet (1.07 m) would be in addition to the free fall distance which OSHA proposes to limit to 6 feet (1.8 m), meaning that a total fall of 9.5 feet (2.9 m) could result. OSHA has already adopted this approach in the general industry, construction, and shipyard employment standards on fall protection. The proposed requirements are also consistent with the national consensus standards, ANSI/ASSE Z359.1–2007 (section 3.1.4) and ANSI/ASSE A10.32–2004.

Proposed paragraph (d)(1)(iii) requires the personal fall arrest system to have sufficient strength to withstand twice the potential impact energy of an employee free falling a distance of 6 feet (1.8 m), or the free fall distance permitted by the system, whichever is less. Compliance with this requirement means that the system will not fail if subjected to twice the design shock load. For example, if a body harness is being used as part of the personal fall arrest system, proposed paragraph (d)(1)(i) of the standard specifies that the arresting force be limited to 1,800 pounds (8 kN). Therefore, the system would have to be capable of withstanding an impact force of 3,600 pounds (16 kN), which is twice the potential arresting force of the employee using the system. The Agency believes that a safety factor of two is necessary because of normal wear on the system. In practice, arresting forces should never approach the design shock load because the free fall distance will be less than 6 feet (1.8 m), and because lifelines, which absorb energy, will often be used. Again, this requirement is consistent with OSHA's existing general industry, construction, and shipyard employment standards on fall protection.

A note to proposed paragraph (d) makes it clear that personal fall arrest systems that meet the criteria and protocols set out in Appendix D to proposed § 1910.140 will be deemed to be in compliance with the requirements of proposed paragraphs (d)(1)(i) through (iii) when used by an employee with a combined tool and body weight of 310 pounds (140 kg) or less. The non-mandatory appendix provides one method which will allow employers to evaluate the ability of a personal fall arrest system to meet the necessary criteria. The appendix is restricted to situations in which total tool and body weight is 310 pounds (140 kg) or less because the test methods in proposed Appendix D were designed for this weight. If a system is needed for a greater or lesser weight, the test methods may still be used, provided they are modified, possibly by using a heavier or lighter test weight to reflect the heavier or lighter weight of the employee.

In paragraph (d)(2) OSHA is proposing criteria for the use of personal fall arrest systems. In paragraph (d)(2)(i) OSHA proposes that where employees working on suspended scaffolds or on similar work platforms are connected to horizontal lifelines that could become vertical lifelines, the device used to connect to the horizontal lifeline must be capable of locking in both directions on the lifeline. OSHA believes this requirement is necessary because a horizontal lifeline could become a vertical lifeline if one end of the scaffold support lines fails. For example, a rope grab that does not lock in both directions on the lifeline could fail to hold, allowing the employee to fall to a lower level. OSHA has already adopted this approach in the general industry, construction, and shipyard employment standards on fall protection. The hazard addressed in the proposed requirement is also addressed in the national consensus standard, ANSI/ASSE A10.32–2004 (section 4).

Paragraph (d)(2)(ii) of the proposal requires the personal fall arrest system to be rigged so that an employee can neither free fall more than 6 feet (1.8 m) nor contact any lower level. The system strength and deceleration criteria are based on a maximum free fall distance of 6 feet (1.8 m). A longer free fall distance could mean that the strength and deceleration requirements would no longer protect employees. OSHA has already adopted this approach in the

general industry, construction, and shipyard employment standards on fall protection. Similar requirements are also found in the national consensus standards, ANSI/ASSE Z359.1–2007 (section 7.2) and ANSI/ASSE A10.32–2004 (section 4.2.1).

Paragraph (d)(3) of the proposal prohibits the use of body belts for personal fall arrest systems. Because OSHA is proposing to ban the use of body belts as part of personal fall arrest systems, it has not proposed maximum arresting forces when body belts are used. OSHA notes that both the construction industry and shipyard employment standards already prohibit the use of body belts as part of personal fall arrest systems.

Paragraph (e) Positioning Systems

Proposed paragraph (e) establishes specific requirements applicable when positioning systems, including window cleaner's positioning systems, are used. These new, specific requirements are in addition to the general requirements in proposed paragraph (c) which apply to all types of fall protection equipment.

Proposed paragraph (e)(1) establishes performance criteria for positioning systems. Proposed paragraph (e)(1)(i) requires that all positioning systems, except window cleaner's positioning systems, be capable of withstanding, without failure, a drop-test consisting of a 4-foot (1.2-m) drop of a 250-pound (113-kg) weight.

Proposed paragraph (e)(1)(ii)(A) requires window cleaner's positioning systems to be capable of withstanding, without failure, a drop-test consisting of a 6-foot (1.8-m) drop of a 250-pound (113-kg) weight. In addition, these systems must limit the initial arresting forces to not more than 2,000 pounds (8.9 kN), with a duration not to exceed 2 milliseconds, with any subsequent arresting forces imposed on the falling employee limited to not more than 1,000 pounds (4.5kN). These systems must withstand a more rigorous drop test than other positioning device systems because of their potential for greater free fall distances. OSHA has already adopted this approach in paragraph (b)(2) of the shipyard employment standards at § 1915.160, Positioning device systems. A note applicable to proposed paragraphs (e)(1)(i) and (e)(1)(ii) indicates that window cleaners' positioning systems meeting the tests outlined in Appendix D to proposed § 1910.140 are considered to be in compliance with these provisions.

Proposed paragraph (e)(1)(iii) addresses criteria for lineman's body belt and pole strap systems. Although positioning equipment used in electric power transmission and distribution work is not intended to be used as insulation from live parts, positioning straps could come into contact with live parts while an employee is working. Thus, it is still important for this equipment to provide some level of insulation. Proposed paragraphs (e)(1)(iii)(A) and (e)(1)(iii)(B) would require positioning straps to be capable of passing dielectric and leakage current tests. This provision is equivalent to existing § 1926.959(b)(1). The voltages listed in these paragraphs are alternating current. The note following proposed paragraph (e)(1)(iii) indicates that equivalent direct current tests would also be acceptable.

The remaining requirements in proposed paragraph (e)(2) contain criteria applicable only to window cleaner's belts, anchorages, and other components of window cleaner's positioning systems. There are no specific requirements for this type of personal fall protection system in existing OSHA standards. Rather, OSHA enforces the general requirement to have fall protection, and relies on national consensus standards for the criteria for such systems. The proposed requirements will enhance compliance and reduce hazards by clarifying exactly what requirements apply to positioning systems used for window cleaning. All of these requirements are based on the national consensus standard, ANSI/IWCA I–14.1–2001, Window Cleaning Safety, and address the design, strength, and installation of window cleaners' positioning systems. OSHA believes that these proposed criteria, in conjunction with the proposed general criteria for all personal fall protection systems (§ 1910.140(c)), provide a reasonable and necessary level of safety for employees using these systems.

OSHA notes that all of these requirements were proposed in the 1990 rulemaking. There was no substantive comment on the proposed revisions even though OSHA asked for specific comment as to whether existing buildings have window cleaning anchors that meet these standards and, if not, what would be the cost of coming into compliance. OSHA particularly raised concern about one proposed provision—paragraph (e)(2)(iii) of the current proposal—which requires that window cleaning anchors and the structures to which they were attached support a 6,000 pound (26.5 kN) load, noting that there was some concern that the 6,000 pounds (26.5 N) might be too restrictive. OSHA believes that window cleaner's belts and their associated anchors are not used as commonly as they once were. However, since there are buildings where these systems are still used, OSHA proposes these minimal requirements to protect employees.

Also, OSHA proposes to add two appendices to § 1910.140. These appendices, which are non-mandatory, would provide specific information and examples pertaining to the types of equipment regulated in this proposed standard. Appendix C provides useful information and guidance concerning the use of personal fall arrest systems. The information concerns the selection and use of personal fall arrest systems including considerations for testing, employee training, instruction, and inspection. Appendix D provides test methods for personal fall arrest systems and positioning device systems. OSHA specifically requests comments on whether or not this proposed appendix should include any test methods with the final rule; update the test methods proposed; or include other testing sources. OSHA also seeks comment on whether these proposed appendices will prove helpful in complying with the proposed provisions. Additionally, the Agency requests comment whether any of the non-mandatory language in Appendix C or D should be included in the requirements of § 1910.140.

Finally, OSHA is proposing to require employers to conduct a hazard assessment as required by § 1910.132(d), and to follow the training requirements set out in § 1910.132(f).

V. Preliminary Economic and Initial Regulatory Flexibility Screening Analysis

A. Introduction

OSHA has determined that this proposed standard governing occupational exposure to slip, trip, and fall hazards on walking and working surfaces is significant under Executive Order 12866 (Sept. 30, 1993). Accordingly, the Office of Regulatory Analysis within OSHA has prepared this Preliminary Economic and Initial Regulatory Flexibility Screening Analysis (PEA) for the proposed standard. In conducting the PEA, OSHA has, to the extent possible given the available resources, endeavored to meet the requirements of OMB's Circular A–4 (OMB, 2003), a guidance document for regulatory agencies preparing economic analyses under Executive Order 12866.

This PEA addresses issues related to the costs, benefits, technological and economic feasibility and economic impacts (including small business impacts) of the Agency's proposed revisions to subpart D, Walking-

Working Surfaces, and subpart I, Personal Protective Equipment. The analysis also evaluates regulatory alternatives to the final rule. This rule has been reviewed by the Office of Information and Regulatory Affairs in the Office of Management and Budget, as required by executive order.

The purpose of the PEA is to:

- Identify the establishments and industries potentially affected by the proposed rule;
- Estimate current exposures to slip, trip, and fall hazards in general industry and assess the technologically feasible methods of controlling these exposures;
- Estimate the benefits of the rule in terms of the reductions in the number of deaths and injuries that employers will achieve by coming into compliance with the standard;
- Evaluate the costs and economic impacts that establishments in the regulated community will incur to achieve compliance with the proposed standard;
- Assess the economic feasibility of the rule for affected industries; and
- Evaluate the principal regulatory alternatives to the proposed rule that OSHA has considered.

The Regulatory Flexibility Act (as amended in 1996) (SBA, 1996; 5 U.S.C 601) requires that an initial regulatory flexibility analysis (IRFA) be prepared if an agency determines that a proposed rule will impose a significant economic impact on a substantial number of small entities. To determine the need for an IRFA, OSHA voluntarily prepared an initial regulatory flexibility screening analysis that identifies and estimates the impacts of the proposed standard on small businesses. In addition to background information on the affected workforce and the hazards to which they are exposed, this subsection of the economic analysis describes the need for a standard for walking-working surfaces and the criteria that guide OSHA in conducting a feasibility analysis for a safety standard. On the basis of the screening analysis, presented in the last subsection of this PEA, OSHA certifies that the proposed rule will not have a significant economic impact on a substantial number of small entities.

This PEA contains the following subsections in addition to this Introduction:

- Assessing the Need for Regulation.
- Industry Profile.
- Benefits, Net Benefits, and Cost Effectiveness.
- Technological Feasibility.
- Costs of Compliance.
- Economic Impacts.
- Initial Regulatory Flexibility Screening Analysis.

To develop the PEA, OSHA relied considerably on (1) the record created throughout the history of this rulemaking, and (2) an analysis by OSHA's contractor, Eastern Research Group (ERG) (ERG, 2007 Ex. 6).

Reasons Why Action by the Agency Is Being Considered

Earlier in this preamble OSHA discussed the major changes that are being proposed to the existing standards for walking-working surfaces and personal protective equipment (subparts D and I of part 1910). The proposed standards are designed to prevent a significant number of slips, trips, and falls that result in injuries and fatalities in general industry, including falls from ladders, roofs, scaffolds, and stairs. Some examples from OSHA's inspection database (OSHA, 2007) best illustrate the kinds of accidents the standards are designed to prevent and how the revised standards will prevent them.

On October 22, 2000, a head repairman for a specialty metals producer in Pennsylvania was replacing a water cooling panel (approximately 8-ft high by 12-ft long) on a basic oxygen furnace vessel. To access the panel, he placed a ladder on an 8-in. diameter pipe. When the employee attempted either to gain access to the panel or to secure the ladder, he fell 22 feet to the ground. He sustained a blunt force trauma injury to his head, and was killed. OSHA cited and fined the employer for a violation of § 1910.23(c)(1), Protection of open-sided floors, platforms, and runways, and § 1910.25(d)(2)(i), Use of ladders, along with other standards. OSHA believes that the proposed clarifications of the requirements for the safe use of ladders and the duty to have fall protection will help to prevent accidents such as the one described above.

In a window cleaning operation on July 20, 2000, two employees were working from boatswain's chairs suspended from a roof by two transportable roof rollers, and lowering their chairs down the side of the building using controlled descent devices. A third employee was on the roof pushing the rollers back and forth to move his coworkers from window to window. The third employee was moving the roller on one end of the building when one of its wheels slipped off the edge of the parapet wall, causing the rollers, which were tied together, to fall between six and seven stories to the ground. The first two employees, whose lifelines were only attached to the suspension point on the rollers, also fell to the ground and sustained serious injuries. When one of the rollers went over the edge, the third employee was catapulted off the roof and fell approximately 84 feet to the ground. He died from the fall. In the investigation, OSHA determined that neither of the rollers was anchored to the roof, and cited the employer for violating the general duty clause (section 5(a)(1)) of the OSH Act. OSHA believes that compliance with the requirements for rope descent systems in the proposed standard for scaffolds (§ 1910.27(c)) will help to prevent this type of accident.

A 49-year-old service technician fractured five vertebrae and eventually died from the injuries received when he fell 11 feet from a fixed ladder to a concrete landing while performing air conditioning service work on the roof of a shopping mall. OSHA's investigation of the August 24, 2004, accident identified the likely cause of the incident as the absence of uniform spacing between the ladder rungs throughout the climb (the space between the top two rungs/steps was 28 inches whereas the space between lower rungs was much narrower). Proposed § 1910.23(b)(2) requires that, with a few exceptions, rungs, cleats, and steps of ladders be spaced not less than 10 inches (25 cm) apart nor more than 14 inches (36 cm) apart, as measured between the center lines of the rungs, cleats, and steps. OSHA believes that compliance with this proposed provision will prevent accidents such as the one described here.

As a final example, on October 22, 1999, an employee in a South Dakota feed mill was atop a soybean storage bin gauging the level of the contents when he fell approximately 24 feet onto a concrete surface. The employee suffered head and upper body injuries that resulted in his death. The subsequent OSHA investigation resulted in citations for violations of the general duty clause and provisions in existing subpart D on floors, platforms, and railings. OSHA believes that the proposed revisions to subpart D will remove any ambiguity in the scope or intent of the rule, which would help to prevent falls from storage bins and related surfaces.

When establishing the need for an occupational safety and health standard, OSHA must evaluate available data to determine whether workers will suffer a material impairment of their health or functional capacity as a result of being exposed to the safety or health hazard at issue. Prior to promulgating a standard, the Agency must also determine that "a significant risk of harm exists and can be eliminated or lessened by a change in practices." *See Industrial Union Dep't* v. *American Petroleum Institute,* 448 U.S. 607 (1980).

See also 58 FR 16612 (March 20, 1993) (OSHA must conclude that the standard it is promulgating will substantially reduce a significant risk of material harm).

OSHA has determined that the best available data for quantitatively estimating the risks associated with slips, trips, and falls in general industry come from the BLS injury and illness survey and census data. OSHA has relied on federal survey and census data from recent years to determine the risk to similarly exposed employees across industry in other safety standards regulating employee exposure to risks (*e.g.,* Confined Spaces in Construction 72 FR 67351 (November 28, 2007)). It is also an accepted scientific approach used by other regulatory and non-regulatory entities in making decisions regarding public safety.

As previously discussed in section II of this preamble, OSHA has preliminarily determined that hazards associated with walking and working on elevated, slippery, or other surfaces pose significant risks to employees and that the proposed revisions to subparts D and I are reasonable and necessary to protect affected employees from those risks. The Agency estimates that full compliance with the revised walking-working surfaces standards will prevent 20 fatalities and 3,706 lost workday injuries annually. This constitutes a substantial reduction of significant risk of material harm for the exposed population of approximately 5.3 million employees in general industry.

Feasibility

The Agency must show that the standards it promulgates are technologically and economically feasible. *See* 58 FR 16612. A standard is *technologically feasible* if the protective measures required already exist, can be brought into existence with available technology, or can be created with technology that can reasonably be designed and developed.[10] Protective measures required by safety standards generally involve the use of engineering and work practice controls. Engineering controls include, for example, guardrails, toeboards, or other barriers that protect employees from exposures to slip, trip, and fall hazards. Work practice controls are techniques that employees use to perform their jobs (for example, safe climbing techniques on ladders). Administrative controls (such as job rotation) and personal protective equipment (PPE) (such as harnesses and lanyards) may also be used to comply with safety standards.

A standard is *economically feasible* if the cost of meeting the standard does not threaten the existence or competitive structure of an industry. An OSHA standard may be economically feasible even if it imposes costs that will put some marginal firms out of business.[11] As discussed in more detail below, OSHA has preliminarily concluded that the proposed revisions to subparts D and I are both economically and technologically feasible.

Methodology

OSHA has developed an economic analysis to estimate the benefits and costs of the proposed revisions to subparts D and I. Since 2002, under the direction of the Office and Management and Budget, the Agency has "monetized" the value of the injuries, illnesses, and fatalities expected to be prevented through the promulgation of new standards, *i.e.,* it has monetized the value of expected benefits. This provides a common metric for comparing expected benefits and costs.

For all of its occupational safety and health standards, OSHA estimates benefits and costs as annual figures. The Agency believes that this is the simplest and best way to assess the impact of its standards. Computing annual estimates focuses the Agency's analysis on information from current conditions and recent years, which the Agency deems the best, *i.e.,* most accurate and reliable, information. OSHA typically uses a time period of ten years for its analysis, unless there are significant long-term effects not captured within a ten-year timeframe. In the case of this proposed rule for subparts D and I, adding additional years to the timeframe of the analysis would not change any major policy conclusions.

To isolate and describe only the effects of a new standard, the Agency carefully distinguishes, for both benefits and costs, the change induced by the new standard without regard to the ongoing level of compliance with existing standards. Injuries or fatalities preventable through compliance with existing regulations are not included in OSHA's assessment of the benefits expected from compliance with the new standard. Similarly, the Agency does not include the cost of complying with existing standards in its assessment of what it will cost employers to comply with the new standard. To make a standard's costs and benefits consistent for comparison, the Agency assumes that all employers will fully comply with the proposed standard. OSHA's analysis also assumes that all costs are incurred in the first year following promulgation of the final standard (ongoing costs are incurred annually beginning in Year 1) and that benefits result immediately.

The Agency employs a "willingness-to-pay" (WTP) approach in estimating benefits. This is a two-step process in which, for the proposed revisions to subparts D and I, 16 years of accident data collected by the Bureau of Labor Statistics were studied to estimate the number of fatalities and injuries associated with slips, trips, and falls, and also the number of such accidents that would be avoided by full compliance with the proposed standard. Secondly, the Agency uses values from the WTP approach to produce a monetary value of benefits. The WTP approach applied by many economic studies estimates the "value of a statistical life" (VSL) based on data collected about job risks and the "risk premium" in wages that is paid to employees in riskier jobs. The VSL is used as a metric by many government regulatory authorities, such as the National Highway Traffic Safety Administration and the Environmental Protection Agency, but is particularly appropriate for occupational regulations since it is derived from occupational risks and wages.

The Agency's calculation of benefits and costs, summarized in the table on net benefits (Table V–14 in this PEA), is implicitly one that looks at society as a whole. Estimated costs are borne by all affected employers, while benefits from the WTP approach are market-derived estimates of employees' valuations of job risk and reward (economic feasibility, discussed in Subsection G below, focuses on employer and industry economic impacts without regard to benefits). The VSL represents to some extent the value to an employee of taking on additional job risks and describes the value to employees of avoiding injury and death.

The primary alternative to a WTP approach is a "cost-of-injury" (COI) approach. A COI approach accounts for the various costs to all parties associated with an injury or fatality, including medical costs, the costs of work disruption from accidents and accident investigations, indirect costs to employers (*e.g.,* absenteeism, hiring costs), lost wages or job opportunities,

[10] See *Society of the Plastics Industry* v. *OSHA,* 509 F.2d, 1301, 1309 (1975); *USWA* v. *Marshall,* 647 F.2d, 1189 (1980); *American Textile Manufacturers* v. *Donovan,* 452 U.S. 490 (1981); and *Building and Construction Trades Dept., AFL–CIO* v. *Brock,* 838 F.2d 1258 (1988).

[11] See *Industrial Union Dept.* v. *Hodgson,* 499 F.2d 467 (1974); *USWA* v. *Marshall,* 647 F.2d, 1189 (1980); and *American Textile Manufacturers* v. *Donovan,* 452 U.S. 490 (1981).

and rehabilitation expenses. The COI approach results in ascribing costs and benefits to many involved entities: The employer, the employee, workers' compensation programs, medical insurance, Federal disability programs, governmental bodies, and taxpayers, for example. A COI approach does not capture a value for loss of life, pain and suffering, impacts on families, or similar parameters, and for that reason the Agency believes that the VSL is more consistent with the purposes of the OSH Act.

B. Assessing the Need for Regulation

Introduction

Employees throughout general industry are exposed to slip, trip, and fall hazards that can and do cause serious injury and death. As detailed below, OSHA estimates that, on average, approximately 216,000 serious (lost-workday) injuries and 279 fatalities occur annually among these workers; of these totals, 63,000 lost-workday injuries and 230 fatalities would be directly affected by the proposed standard. Although some of these incidents may have been prevented with better compliance with existing safety standards, research and analyses conducted by OSHA have found that many preventable injuries and fatalities would continue to occur even if employers were fully complying with the existing standards. Relative to full compliance with the existing standards, OSHA estimates that an additional 3,706 lost-workday injuries and 20 fatalities would be prevented each year through full compliance with the proposed standards.

An additional benefit of this rulemaking is that it will provide updated, clear, and consistent safety standards for walking and working surfaces and personal fall protection equipment. Most of the existing OSHA standards for walking-working surfaces are over 30 years old and inconsistent with both national consensus standards and more recently promulgated OSHA standards addressing fall protection.

Presently, OSHA's standards for fall protection on walking-working surfaces in general industry differ from the comparable standards for construction work. In most instances, employees use similar work practices to perform similar tasks, irrespective of whether they are technically doing construction or general industry work. Whether OSHA's construction or general industry standards apply to a particular job depends upon whether the employer is altering the system (construction work) or maintaining the system (general industry work). For example, replacing an elevated ventilation system at an industrial site would be construction work if it involves upgrading the system, but general industry work if it involves replacing the system with the same model. Since the work practices used by the employees would most likely be identical in both situations, it is desirable for OSHA's general industry and construction standards to be as consistent as possible. Under OSHA's existing requirements, however, different requirements might apply to similar work practices, *e.g.,* an employer overhauling two or more ventilation systems may have to comply with two different sets of OSHA requirements if one project is considered construction and another general industry. The existing inconsistencies between the construction and general industry standards create difficulties for employers attempting to develop appropriate work practices for their employees. For this reason, employers and employees have told OSHA that they would like the two standards to match more closely. This proposal attempts to achieve that result.

Other benefits of the proposal that OSHA has neither quantified nor monetized include the following. First, OSHA has not attempted to estimate the number of fall injuries prevented that do not result in lost workdays. Second, OSHA has not attempted to estimate the improvements in efficiency of compliance associated with clarifying the existing rule and bringing it into closer correspondence with current voluntary standards.

OSHA's benefits estimates are most sensitive when it comes to estimating the percentage of current injuries and fatalities that can be avoided by full compliance with the proposed standard. The true benefits of the proposal depend on how well the cases reviewed represent actual fall-related fatalities in general industry.

The Agency believes that its estimate of annual fatalities involving slips, trips, and falls (about 230) in general industry is much less sensitive than the estimate of the percentage of fatalities avoided, because the estimate of the annual number of baseline fatalities is derived from 2 years of recent accident data with averages corroborated by 11 prior years of data. Furthermore, because OSHA believes that its benefits estimates are conservatively low, training and work practices specified in this proposal would likely improve the use and application of safety equipment, thereby further reducing fatalities and injuries.

In addition to estimating annualized costs using a discount rate of seven percent, OSHA, for sensitivity purposes, applied an alternative discount rate of three percent to up-front costs. Under the alternative scenario of a three-percent discount rate, OSHA estimates that annualized costs would decline from $173.2 million to $168.8 million. For both this scenario and for the primary (seven-percent rate) scenario, OSHA assumed that all costs (first-year and recurring) will be incurred upon implementation of the final standard (*i.e.,* there are no phase-in provisions). OSHA is also assuming that the benefits outlined in this section will accrue once the rule takes effect. Other cost-related uncertainties are described in greater detail below in section D of this PEA, and concern OSHA's estimates of the number of buildings affected by, and the number of employees who would require training under, this proposed standard.

Before reaching the preliminary conclusion that this proposal is necessary to reduce the number of fatalities and injuries occurring among workers involved in activities that expose them to slips, trips, and falls, and to make the applicable standards more clear and consistent, OSHA considered many regulatory and non-regulatory alternatives. These alternatives are discussed in the remainder of this subsection.

Alternative Regulatory Approaches

To determine the appropriate approach for addressing the occupational risks associated with slips, trips, and falls in general industry, OSHA considered many different factors and potential alternatives. The Agency examined the incidence of injuries and fatalities and their direct and underlying causes to ascertain where existing standards needed to be strengthened. OSHA reviewed these standards, assessed current practices in the industry, collected information and comments from experts, and scrutinized the available data and research.

OSHA faces several constraints in determining appropriate regulatory requirements. Under section 3(8) of the OSH Act, OSHA standards must be "reasonably necessary or appropriate to provide safe or healthful employment and places of employment." Also, under section 6(b)(8) of the OSH Act, to the extent an OSHA standard differs substantially from existing national consensus standards, the Agency must explain why the OSHA standard will better effectuate the purposes of the OSH Act. As noted elsewhere, OSHA standards must also be technologically

and economically feasible and cost effective.

The table below presents a summary of projected costs and benefits for each section of the proposed standard.

Proposed requirement	Benefits			Costs ($millions)
	Type of accident prevented	Fatalities prevented	Injuries prevented	
§ 1910.22 General Requirements.	Fall from floor, dock, or ground level.	1.0	388	$15.7
	Fall from building girders or other structural steel.	0.2	13	
§ 1910.23 Ladders	Fall from ladder	large fraction of 5.5	large fraction of 1,871	9.7
	Fall from ship, boat, n.e.c.	fraction of 1.4	fraction of 2	
§ 1910.24 Step Bolts and Manhole Steps.	Fall from ladder	small fraction of 5.5	small fraction of 1,871	3.7
	Fall down stairs or steps	0.4	846	
§ 1910.27 Scaffolds	Fall from scaffold, staging	large fraction of 6.7	large fraction of 174	73.0
§ 1910.28 Duty to Have Fall Protection.	Fall from ladder	small fraction of 5.5	small fraction of 1,871	0.09
§ 1910.29 Fall Protection Systems Criteria and Practices.	Fall from building girders or other structural steel.	0.2	13	8.4
	Fall from ship, boat, n.e.c.	fraction of 1.4	fraction of 2.	
	Fall from scaffold, staging	small fraction of 6.7	small fraction of 174.	
§ 1910.30 Training Requirements.	Multiple fall categories	fraction of benefits for many fall categories.	fraction of benefits for many fall categories.	44.1
§ 1910.140 Fall Protection	Multiple fall categories	fraction of benefits for many fall categories.	fraction of benefits for many fall categories.	18.5

Source: U.S. Dept. of Labor, OSHA, Directorate of Evaluation and Analysis, Office of Regulatory Analysis, 2010.

A full discussion of the basis for the particular regulatory requirements chosen is provided in section IV, Summary and Explanation of the Proposed Rule, earlier in this preamble. The regulatory alternatives considered by OSHA are discussed in the Initial Regulatory Flexibility Screening Analysis later in this section of the preamble. In that section, Table V–34 presents impacts associated with regulatory alternatives for selected provisions in the proposed standard. OMB's Circular A–4, *Regulatory Analysis,* recommends that agencies "should analyze at least three options: the preferred option; a more stringent option that achieves additional benefits (and presumably costs more) beyond those realized by the preferred option; and a less stringent option that costs less (and presumably generates fewer benefits) than the preferred option" (p. 16). The preferred option is presented in this NPRM. A less stringent alternative, rejected by OSHA, would require training for a more limited number of fall-hazard categories; the cost of this alternative would remain significant (but below the cost of $44.1 million for the preferred alternative training proposal), with a reduction in benefits relative to the preferred alternative.

A more stringent alternative would require that cages, wells, and landing platforms be provided for all fixed ladders, while disallowing ladder safety devices; the cost of this alternative would be highly significant, while the incremental benefits would be modest relative to the preferred alternative. OSHA notes that in the 1990 NPRM, this alternative was one of several provisions associated with the existing standard for which OSHA provided an estimated cost; the annualized cost for cages, wells, and other safety devices for fixed ladders was $1.6 billion in 1990 dollars. Though OSHA believes use of ladder-safety devices has increased considerably since 1990, this more stringent alternative would still probably be extremely expensive compared to the proposed rule.

Alternative Nonregulatory Approaches

Introduction.

The stated purpose of the OSH Act is to "assure so far as possible every working man and woman in the Nation safe and healthful working conditions and to preserve our human resources." (5 U.S.C. 651.) This congressional mandate provides the basis for OSHA's proposed rulemaking on walking-working surfaces, which is designed to mitigate the occupational hazards associated with slips, trips, and falls.

Before issuing a standard, OSHA must assess whether there are other, nonregulatory approaches available that may provide equal or greater benefits. Executive Order 12866 directs regulatory agencies to assess whether an unregulated private market can achieve the same level of social benefits as that expected to result from federal regulation:

Section 1. Statement of Regulatory Philosophy and Principles. (a) The Regulatory Philosophy. Federal Agencies should promulgate only such regulations as are required by law, are necessary to interpret the law, or made necessary by compelling public need, such as material failures of private markets to protect or improve the health and safety of the public, the environment, or the well-being of the American people. In deciding whether and how to regulate, agencies should assess all costs and benefits of available regulatory alternatives, including the alternative of not regulating.

The discussion below considers several nonregulatory alternatives to OSHA's proposed rulemaking: Private market incentives, information dissemination programs, tort liability options, and workers' compensation programs.

Private Market Incentives.

Economic theory suggests that the need for government regulations would be greatly reduced if private markets worked efficiently and effectively to provide health and safety protections for employees. At issue is whether the private market will be able to produce a level of safety and health for employees that will be equal to or greater than that potentially afforded by the proposed OSHA standards. In particular, OSHA examined whether the level of risk of experiencing an injury in an unregulated market would be at least as low as the level of risk expected after completion of this proposed rulemaking for walking-working surfaces.

Theoretically, unregulated markets are capable of achieving an efficient allocation of resources if certain assumptions are satisfied. Necessary assumptions include perfect and free information, perfect and costless mobility of labor and other factors of production, and an absence of any externalities.

A major conclusion of the "perfect competition model" of economic theory is that, in the presence of full information about market choices and outcomes, and with complete mobility of the factors of production, the private market would produce an efficient allocation of resources. In the presence of perfect and complete information regarding occupational risks, labor markets would reflect the presence of different degrees of risk across different industries, firms, and occupations. In such a market, wage premiums would be paid to compensate employees engaged in hazardous occupations for the added risk they confront on the job.

In this theoretical framework, wages would vary directly with the riskiness of a job (other things being equal), and employers would have an incentive to make investments to reduce occupational health and safety risks to the extent employees would demand compensation for being exposed to such risks. In other words, because employers would have to pay their workers a premium to induce them to work in a risky environment, employers would be willing to pay to make that environment less risky by introducing technologies and practices that lower risks to employees.

In addition, a perfectly competitive market will theoretically lead to the efficient allocation of resources only if all of the costs and benefits (pecuniary and nonpecuniary) associated with the behavior of market participants and with market transactions are fully borne by those directly involved. In economic terms, this implies that there will not be any negative externalities associated with economic activities.

If all of the costs associated with occupational safety and health risks would in fact be internalized, then market decisions about occupational safety and health conditions made by employers and employees would be based on a consideration of the full social costs of their economic actions. However, if some of the effects of these actions are externalized (that is, some costs are not borne by employers and employees but by other parties who are external to the transaction), then those costs will not be adequately incorporated into the decisions of managers and workers. The resultant market allocation of resources can then be expected to be less efficient.

Costs and other impacts that are imposed on society and are not borne directly by the economic participants involved in an activity or transaction are referred to as externalities. The existence of such externalities is one reason why an unregulated private market often fails to produce an efficient allocation of resources. The presence of these externalities also implies that economic efficiency can potentially be improved with regulatory interventions.

In a theoretically perfect market without externalities, firms would decide how much to spend on reducing safety and health risks based on the full costs associated with the presence of such risks. The costs include pain and suffering, impacts on the quality of the lives of families, and effects on society as a whole. Employees would decide whether they were willing to work in a particular job based on the relative riskiness of the job and the extent to which they believe the wages offered to them provide adequate compensation for these risks.

Research conducted by OSHA and information from several other sources show that many firms have responded to the risks posed to employees by exposures to slip, trip, and fall hazards. Employers have increasingly recognized the costs associated with these risks and have implemented measures to reduce the occupational risks faced by their employees. In fact, many risk control programs already implemented by employers go beyond the requirements of the existing and proposed OSHA standards. The fact that employers are implementing these programs demonstrates that economic incentives exist, at least to some degree, to motivate employers in the direction of reducing the risks associated with occupational exposures to slip, trip, and fall hazards in general industry.

However, OSHA notes that many employers continue to fall short of providing even minimum safety protections for their employees. Such circumstances persist despite ongoing attempts by OSHA and other groups to provide information and assistance to employers to increase awareness and reduce the risks of working on surfaces where there are exposures to slip, trip, and fall hazards. The benefits subsection of this preliminary analysis shows that preventable injuries and fatalities continue to occur every year. The evidence indicates that market forces cannot alone curb occupational slip, trip, and fall risks adequately.

Among employees exposed to the hazards addressed by this proposed rule, there does not appear to be any risk premium reflected in wage rates that would differentiate between employers based on the extent of risks faced by employees. In fact, there is some evidence that in the affected industries, wages for employees in similar jobs performing similar types of work are negatively correlated with the degree of risk involved. For example, employees of host sites tend to earn more than their counterparts working for contractors, and yet the fatality and injury rate can often be higher among employees of contractors.[12]

There are a variety of reasons why employees may not be paid the risk premiums that would theoretically be necessary to ensure that markets provide efficient levels of expenditures on safety and health. Employees have imperfect knowledge about the nature and magnitude of occupational risk factors. Many employees are not likely to be fully aware of the extent and nature of occupational risks associated with different jobs and different employers at different points in time.

Even if employees have adequate information regarding the risks of occupational injuries, they may be unable to adequately incorporate this information into their decisions about choosing a job or staying on the job. Other factors and circumstances may affect employment choices, including significant costs associated with job searches and changing jobs.

Assessing occupational risks for the purpose of determining the acceptability of wages offered is made even more difficult when differences in risk between two firms are significant but cannot be readily observed or predicted over the pertinent time periods. If differences in occupational risk between various establishments are not fully incorporated into the employment decisions of employees, the wage premiums paid for risky jobs will not accurately reflect the relative occupational risks associated with specific jobs in different firms. Thus, firms will have little incentive to individually reduce risk beyond levels present in other firms.

[12] As evidence of this phenomenon, 254,550 general maintenance and repair workers employed by manufacturers in 2007 earned a mean hourly wage of $19.04 and suffered 4,610 lost-workday injuries and illnesses, or 181 injuries or illnesses per 10,000 workers, while 45,040 general maintenance and repair workers employed in Other Services in 2007 earned a mean hourly wage of $14.90 and experienced 1,150 lost-workday injuries and illnesses, or 255 injuries or illnesses per 10,000 workers. See Bureau of Labor Statistics (BLS), *Occupational Employment Statistics,* and BLS, *Occupational Injuries and Illnesses.*

In addition, many employers may simply be unaware of the direct and indirect costs associated with occupational risks. Some employers may regard these costs as beyond their control or as part of general overhead costs. Employers may also not be fully aware of the availability of cost-effective ways of ameliorating or eliminating these risks and reducing the corresponding costs.

A significant problem that prevents risk premiums in an unregulated market from achieving the theoretical results that may potentially reduce occupational risks involves imperfections in the operation of labor markets. Changing jobs can be costly, and in some circumstances the costs may preclude a decision to change jobs solely on the basis of the occupational health risks involved. Factors that may make job changes particularly costly include nontransferability of occupational skills or seniority within a company, the difficulty of acquiring sufficient skills and abilities (*i.e.,* human capital) to seek alternative employment opportunities, the costs and uncertainty associated with relocating to take advantage of better employment opportunities, the existence of institutional factors such as the nontransferability of pension plans and seniority rights, and the risk of prolonged periods of unemployment.

Often, differences in occupational risk between two firms must be marked before an employee will change jobs on that basis. Therefore, wage rates determined by a market in which the protection of occupational safety and health is unregulated are unlikely to fully compensate employees for occupational health and safety risks, including those related to the risks of concern here.

Information Dissemination Programs

OSHA and other organizations currently produce and disseminate a considerable amount of information regarding the risks associated with work on walking and working surfaces and the methods that can be used to minimize slip, trip, and fall hazards. The dissemination of such information would continue in conjunction with the promulgation of the proposed standards. Alternatively, in lieu of issuing mandatory standards, OSHA could rely on current or expanded information dissemination programs to generate the incentives necessary to produce further reductions in injuries and fatalities. Better informed employees can more accurately assess the occupational risks associated with different jobs, thereby facilitating those market interactions that result in wage premiums for relatively risky occupations.

There are several reasons, however, why reliance on information dissemination programs will not yield the level of social benefits achievable through compliance with the proposed rules for walking-working surfaces. Foremost, there are no reliable incentives or mechanisms that would ensure that appropriate and sufficiently detailed information could be produced, or that such information would actually be distributed among, and relied upon by, employees. Furthermore, the hazards addressed by this proposal are highly specific to individual tasks and work environments. The development of accurate knowledge about these occupational risks would require each employer to make available specific information about the risks present in projects expected to be undertaken in the future. The lack of adequate incentives or mechanisms and the potentially large costs associated with the collection and reporting of the necessary information makes effective information dissemination difficult to implement in practice.

In addition, even if employees are better informed about workplace risks and hazards, other factors, such as barriers to labor mobility, that contribute to market failure would still remain. Finally, as argued above, employees may not be able to evaluate information about long-term risks accurately when making employment decisions. Better information, therefore, will not ensure that the market will produce wage risk premiums in a manner that is consistent with an efficient allocation of resources.

Currently, in addition to the applicable OSHA standards, there are consensus standards, voluntary guidelines, and other information sources for preventing injuries and fatalities from slips, trips, and falls on walking and working surfaces. Although many employers have adopted the practices and procedures recommended by these sources, many other employers have been less successful in the widespread implementation of the recommendations in these voluntary guidelines. The Costs of Compliance subsection of this PEA provides further information regarding current compliance with specific elements in sectors covered by the proposal.

Thus, OSHA's experience and observations regarding slip, trip, and fall hazards on walking-working surfaces show that, while improved access to information about occupational risks can provide for more rational decision-making in the private market, voluntary information programs will not produce an adequately low level of occupational risk.

Tort Liability Options

Employees are generally restricted from using tort law to force employers to pay for costs and damages associated with fatalities and injuries that occur on the job. Greater employee use of tort law in seeking redress from injuries associated with the occupational hazards addressed by this proposal is another possible nonregulatory alternative to the proposed rule. If employees were able to effectively sue their employers for damages caused by work-related hazards, and if other conditions regarding the cost and availability of information, knowledge and mobility of employees, and externalities are satisfied, then the need for an OSHA standard would potentially be reduced or eliminated.

A tort may be described, in part, as a civil wrong (other than breach of contract) for which the courts provide a remedy in the form of an action for damages. The application of the tort system to occupationally related injuries and illnesses would mean that an employee whose disability resulted from exposure to a workplace risk would sue the employer to recover damages. The tort system could thus shift the liability for the direct costs of occupational injury from the employee to the employer, at least under certain specific circumstances.

With limited exceptions, however, the tort system has not been a viable alternative to regulation in dealings between employees and employers, for a number of reasons. All States have legislation making workers' compensation either the exclusive or principal legal remedy available to employees. Generally, tort law can be applied only to third-party producers or suppliers of hazardous products or equipment, for example, asbestos products. It is often difficult, however, to demonstrate that workplace injuries have been caused by defective or negligently designed products or equipment.

Moreover, legal proceedings generally fail to fully internalize costs because of the substantial legal fees and uncertainties associated with bringing court actions. In deciding whether to sue, the victim must be sure that the potential award will exceed both the expense and hardship of bringing the lawsuit. Legal expenses commonly include a contingency fee for the plaintiff's lawyer, plus court fees and the costs of accumulating evidence and

witnesses. The accused firm must also pay for its defense.

In sum, the use of legal action as an alternative to regulation is limited because of the expense, delays, and uncertainties involved, and because under current state laws, workers' compensation will normally be an exclusive remedy that will prevent an employee from filing a suit. The tort system, therefore, does not serve adequately to protect employees from exposure to risks in the workplace.

Workers' Compensation Programs

The existing workers' compensation programs serve to partially address the market failures that result in insufficient reductions in occupational risks. An alternative to a mandatory standard would be a continued reliance on these and other existing programs (including possible modifications or enhancements to these programs) to address occupational risk. The workers' compensation system was implemented in part as a result of the perceived failure of the unregulated market to compel employers to sufficiently reduce occupational health and safety risks and to compensate employees for bearing those risks. The system seeks to shift some of the burden of the costs associated with occupational injuries and illnesses from workers to employers. By so doing, workers' compensation requirements can ensure that more of the costs of occupational injuries and illnesses are incorporated into decisions of employers even if employees do not have full information regarding their risks or are unable to receive full wage compensation for such risks. Originally designed to force more of the social costs of occupational injuries and illnesses to be internalized, the workers' compensation program has in practice fallen short of fully achieving this goal and does not fully compensate employees for occupationally related injuries and illnesses.

Compensation tends to be especially inadequate in permanent disability cases, in part because of time limits on benefit entitlements and in part because of the failure of the system to adjust benefits for changes in an employee's expected earnings over time. Several states restrict permanent, partial, and total disability benefits either by specifying a maximum number of weeks for which benefits can be paid or by imposing a ceiling on dollar benefits. Both temporary and permanent disability payments are commonly limited by imposing a ceiling on the income per week that can be paid. In addition, under workers' compensation, no award is made for pain and suffering.

Although rules vary by state, temporary disability income is designed in most states to replace two-thirds of the worker's before-tax income. However, most states place a maximum and a minimum on the amount of money paid out to the employee, regardless of his or her actual former income.

The Workers Compensation Research Institute (WCRI) has studied the extent to which workers' compensation replaces after-tax income in 19 states. These studies show that temporary total disability payments replace between 80 and 100 percent of the after-tax income of the majority of employees in all of the states examined (WCRI, 1993). From 3 to 44 percent of employees receive less than 80 percent of their after-tax income, and from 0 to 16 percent receive more than 100 percent of their previous after-tax income (as a result of the "floor" on payments). In 15 of the 19 states examined, more employees receive less than 80 percent of their former after-tax income than receive more than 100 percent of their former income. WCRI does not provide estimates of the average replacement rates for all employees in a State. However, based on these data, it seems reasonable to assume that, on average, workers receive no more than 90 percent of their after-tax income while on temporary disability.

In addition to not fully replacing after tax income, workers' compensation payments, which are not taxable, provide no replacement for tax losses to the Federal, State or local government as a result of an illness. This loss is properly considered part of the social losses associated with an illness or injury. Typically taxes, including State and Federal income taxes and employee and employer contribution to social security taxes, will be approximately 30 percent of income. The taxes not paid when an individual is unable to work thus add an additional 30 percent of worker income as losses associated with injuries and illnesses not covered by workers' compensation.

In summary, workers' compensation often covers less than 65 percent of the financial losses associated with the costs of injuries, and does not cover any portion of losses due to pain and suffering. Thus, even if the financial costs were fully internalized by employers, workers' compensation would be insufficient to assure adequate economic incentives to address work-related injuries and illnesses. For workers' compensation to be able to internalize costs of work-related injuries and illnesses, it would be necessary for the costs an employer pays for workers' compensation to be directly related to the employer's risk of causing work-related injuries or illnesses.

Most workers' compensation programs nominally include the employer's injury experience as a factor in determining the level of the employer's insurance premiums. However, the majority of firms are not rated individually for their safety and health record; that is, they are not "experience rated." For example, small firms often are ineligible for experience rating because of the high year-to-year variance in their claim rates. Such firms are class rated, and rate reductions are granted only if the experience of the entire class improves. Segregation of loss experience into classes is somewhat arbitrary, and an individual firm may be classified with other firms that have substantially different accident rates. Even when firms have an experience rating, the premiums paid may not accurately reflect their true degree of risk. In addition, a firm's experience rating is generally based on the benefits paid to ill or injured workers, not on the firm's safety and health record or on the actual risks faced by employees. Thus, in some cases employers may have more of an incentive to reduce premiums by contesting claims than by initiating safety and health measures.

For employers who rely on workers' compensation insurance, the payment of premiums represents the employer's major cost for the occurrence of occupational injuries and illnesses. However, the mechanism for determining an employer's workers' compensation premium frequently fails to reflect the real costs associated with a particular employer's record. As a result, efforts made by an employer to reduce the incidence of occupational injuries and illnesses are not necessarily reflected in reduced workers' compensation premiums. Similarly, firms that devote fewer resources to promoting employee safety and health often may not incur commensurately higher workers' compensation costs. Consequently, the program does not provide direct incentives for most employers to reduce the occupational health and safety risks in their workplaces.

Finally, workers' compensation is an insurance mechanism through which participants spread and share the risk of injury and illness claims, and the costs associated with occupational injuries and illnesses are often spread throughout the economy through risk sharing stemming from participation in health insurance programs. For

example, some direct costs may not be incurred or attributed to employers because many employees go to their private physician rather than the company's physician for work-related injuries and illnesses, even though there are systemic mechanisms in place to ensure that work-related injuries are treated through the workers' compensation system. The social burden of adverse health effects is also shared by taxpayer-supported programs such as welfare, Social Security disability and death benefits, and Medicare. Employers have, therefore, less incentive to avoid such losses than they would if they were directly liable for all such claims. This transfer of risk is another reason why the market does not fully internalize the social costs of occupationally related injuries and illnesses.

The workers' compensation system provides economic incentives for larger firms, especially those that self-insure for workers' compensation, because these firms internalize a greater portion of the true costs of the work-related injuries and illnesses incurred by their employees. Thus, larger firms can generally be expected to do more to reduce the costs associated with occupational risks than smaller firms.

In summary, the workers' compensation system suffers from several defects that seriously reduce its effectiveness in providing incentives for firms to create safe and healthful workplaces. First, because the scheduled benefits are often significantly less than the actual losses experienced by injured or ill workers and the social losses experienced by tax payers, the existence of workers' compensation programs limits an employer's liability to levels significantly below the actual costs of the injury or illness. Second, premiums for individual firms are often unrelated or only loosely related to that firm's risk environment. The firm, therefore, does not receive the proper economic incentives and consequently fails to invest sufficient resources in reducing workplace injuries and illnesses. The economic costs not borne by the employer are imposed on the employee directly or on society through social welfare programs.

Summary

OSHA has determined that certain employees are exposed to occupational risks associated with slip, trip, and fall hazards on walking and working surfaces. The private market has not been effective in sufficiently reducing this level of risk due to a lack of complete information about safety risks in specific work environments, limits on worker mobility, and other factors that contribute to the failure of markets to provide an efficient allocation of resources. Options for improving the operations of markets include information dissemination programs, tort liability options, and workers' compensation programs. After considering each of these options, OSHA has concluded that none of them will provide the level of benefits achievable by this proposal to amend subparts D and I.

C. Profile of Affected Industries, Firms, and Workers

Introduction

This subsection presents OSHA's preliminary profile of the firms, establishments, and employees within the industries affected by OSHA's proposed revision to subparts D and I and is based upon data that were assembled and organized by OSHA's contractor, Eastern Research Group (ERG, 2007, Ex. 6).

Affected Industries and Employees

Revised subparts D and I apply to employers and industries covered by OSHA's standards for general industry in 29 CFR part 1910. Similarly, all other subparts in part 1910 affected by these proposed revisions to OSHA's walking-working surfaces standards would impose requirements on employers in general industry under OSHA's jurisdiction. Excluded are establishments in the agriculture, construction, maritime (longshoring, marine terminal, and shipyards), and mining industries. Also excluded are employee tasks on surfaces that, due to location or operational status, fall outside of OSHA's jurisdiction. An example of the latter category is employee exposure to fall hazards when railroad rolling stock is traveling on rails, or trucks are traveling on highways; those operations are regulated by the Department of Transportation.

The walking and working surfaces covered by the standards are present in nearly every establishment. Therefore, OSHA assumes that the number of establishments and employees potentially affected by subpart D includes all establishments and employees in general industry. Table V–1 shows the total number of these establishments and employees potentially affected by revisions to subpart D. The data are listed in order by North American Industry Classification System (NAICS) industry code.

Table V–1 provides economic profile statistics for the industries covered by the proposed standards. Industries are classified and listed by 4-digit North American Industry Classification System (NAICS) industry code (OMB, 2002). Basing its economic profile on the U.S. Census' Statistics of U.S. Businesses for 2006 ("Census data"), OSHA estimates that 6.7 million establishments employing 112 million employees would be affected by the proposed standards.

These revisions to the fall protection standards are estimated to primarily affect approximately 5.3 million employees engaged in installation, maintenance and repair operations in general industry. While it is possible that some other employees may be affected by the revisions to the standards, this represents the main group affected by the standards, and not all of these will automatically be affected. To identify such employees, OSHA identified general industry employees in occupational codes involving construction, installation, maintenance, and repair-related occupational codes. This approach assumes that employees in construction occupations who are employed by general industry employers rather than construction employers are routinely engaged in what OSHA labels maintenance, rather than construction, activities. The methodology for deriving these estimates is discussed in the ERG report (ERG, 2007, Ex. 6).

OSHA also used Census [13] data on payroll and receipts to estimate average revenue per establishment in 2006 for each 4-digit NAICS industry. The methodology for deriving these estimates is discussed later in this PEA.

BILLING CODE 4510–29–P

[13] In this PEA, "Census" refers to the U.S. Census Bureau.

Table V-1
Profile of General Industry Establishments Covered by Subparts D and I

NAICS	NAICS Description	Establish-ments	Average Receipts per Establishment [a]	Total Employment	Production Employment [b]	Employment in Construction, Installation, Maintenance, and Repair Occupations	
						Number	Share of Prod. Employment
1131	Timber Tract Operations	454	$2,036,662	2,806	N/A	N/A	N/A
1132	Forest Nurseries and Gathering of Forest Products	231	$1,282,856	2,098	N/A	N/A	N/A
1133	Logging	10,038	$993,249	61,400	54,442	2,651	4.9%
1141	Fishing	2,024	$945,244	5,646	N/A	N/A	N/A
1142	Hunting and Trapping	348	$610,900	1,875	N/A	N/A	N/A
1153	Support Activities for Forestry	1,682	$874,316	13,491	N/A	N/A	N/A
2111	Oil and Gas Extraction	7,803	$30,788,486	92,683	35,718	18,902	52.9%
2211	Electric Power Generation, Transmission and Distribution	9,494	$38,674,660	493,670	241,665	165,061	68.3%
2212	Natural Gas Distribution	2,458	$30,459,101	78,813	34,835	23,701	68.0%
2213	Water, Sewage and Other Systems	5,222	$1,753,158	41,944	24,691	9,222	37.4%
3111	Animal Food Manufacturing	1,797	$19,646,498	48,173	34,940	3,443	9.9%
3112	Grain and Oilseed Milling	789	$67,092,728	53,724	38,066	4,683	12.3%
3113	Sugar and Confectionery Product Manufacturing	1,733	$15,335,745	72,604	54,862	6,215	11.3%
3114	Fruit and Vegetable Preserving and Specialty Food Manufacturing	1,706	$36,162,586	164,330	137,803	14,901	10.8%
3115	Dairy Product Manufacturing	1,602	$46,854,264	130,253	100,897	9,409	9.3%

Table V-1, contd.
Profile of General Industry Establishments Covered by Subparts D and I

NAICS	NAICS Description	Establish-ments	Average Receipts per Establishment [a]	Total Employment	Production Employment [b]	Employment in Construction, Installation, Maintenance, and Repair Occupations	
						Number	Share of Prod. Employment
3116	Animal Slaughtering and Processing	3,808	$36,333,693	503,800	458,295	26,807	5.8%
3117	Seafood Product Preparation and Packaging	670	$14,575,219	35,894	29,848	1,814	6.1%
3118	Bakeries and Tortilla Manufacturing	10,072	$5,234,957	288,393	209,171	12,174	5.8%
3119	Other Food Manufacturing	3,205	$21,407,943	161,567	115,081	9,525	8.3%
3121	Beverage Manufacturing	3,556	$20,793,132	134,206	87,083	11,304	13.0%
3122	Tobacco Manufacturing	128	$294,956,118	20,887	15,993	3,038	19.0%
3131	Fiber, Yarn, and Thread Mills	468	$18,783,597	48,240	43,096	6,299	14.6%
3132	Fabric Mills	1,376	$11,516,969	91,959	74,678	8,774	11.7%
3133	Textile and Fabric Finishing and Fabric Coating Mills	1,399	$7,019,640	47,567	35,577	2,239	6.3%
3141	Textile Furnishings Mills	2,568	$8,027,868	81,060	65,433	4,353	6.7%
3149	Other Textile Product Mills	4,158	$2,504,229	74,526	57,640	3,203	5.6%
3151	Apparel Knitting Mills	531	$19,609,387	30,784	25,558	2,356	9.2%
3152	Cut and Sew Apparel Manufacturing	9,490	$1,097,216	168,283	129,778	1,463	1.1%
3159	Apparel Accessories and Other Apparel Manufacturing	946	$2,154,523	17,171	12,995	312	2.4%
3161	Leather and Hide Tanning and Finishing	252	$5,524,049	5,807	4,598	264	5.7%
3162	Footwear Manufacturing	308	$8,227,628	16,616	13,933	377	2.7%
3169	Other Leather and Allied Product Manufacturing	838	$2,714,697	16,174	11,838	148	1.2%
3211	Sawmills and Wood Preservation	4,223	$7,011,185	118,483	102,042	9,363	9.2%

Table V-1, contd.
Profile of General Industry Establishments Covered by Subparts D and I

NAICS	NAICS Description	Establish-ments	Average Receipts per Establishment [a]	Total Employment	Production Employment [b]	Employment in Construction, Installation, Maintenance, and Repair Occupations	
						Number	Share of Prod. Employment
3212	Veneer, Plywood, and Engineered Wood Product Manufacturing	1,956	$12,197,313	124,472	104,546	12,662	12.1%
3219	Other Wood Product Manufacturing	10,556	$4,711,036	333,551	274,004	41,426	15.1%
3221	Pulp, Paper, and Paperboard Mills	597	$112,157,688	138,756	113,868	25,541	22.4%
3222	Converted Paper Product Manufacturing	4,542	$18,965,317	302,674	237,071	19,005	8.0%
3231	Printing and Related Support Activities	33,433	$2,815,173	641,011	406,014	10,268	2.5%
3241	Petroleum and Coal Products Manufacturing	2,448	$111,722,106	102,997	66,574	14,987	22.5%
3251	Basic Chemical Manufacturing	2,433	$45,992,561	161,324	101,376	19,450	19.2%
3252	Resin, Synthetic Rubber, and Artificial Synthetic Fibers and Filaments Manufacturing	1,059	$59,275,434	86,294	57,848	10,932	18.9%
3253	Pesticide, Fertilizer, and Other Agricultural Chemical Manufacturing	928	$20,532,685	29,748	20,265	3,685	18.2%
3254	Pharmaceutical and Medicine Manufacturing	1,886	$92,789,569	249,743	92,487	11,310	12.2%
3255	Paint, Coating, and Adhesive Manufacturing	1,915	$17,095,265	67,337	38,452	2,741	7.1%
3256	Soap, Cleaning Compound, and Toilet Preparation Manufacturing	2,279	$30,617,646	105,506	64,873	7,114	11.0%
3259	Other Chemical Product and Preparation Manufacturing	2,747	$14,693,347	105,112	68,105	6,762	9.9%
3261	Plastics Product Manufacturing	12,341	$12,041,641	740,254	578,972	41,042	7.1%

Table V-1, contd.
Profile of General Industry Establishments Covered by Subparts D and I

NAICS	NAICS Description	Establish-ments	Average Receipts per Establishment [a]	Total Employment	Production Employment [b]	Employment in Construction, Installation, Maintenance, and Repair Occupations	
						Number	Share of Prod. Employment
3262	Rubber Product Manufacturing	2,251	$14,217,509	160,588	132,415	10,275	7.8%
3271	Clay Product and Refractory Manufacturing	1,577	$5,317,927	53,521	40,383	4,229	10.5%
3272	Glass and Glass Product Manufacturing	2,103	$10,171,989	102,364	83,249	9,631	11.6%
3273	Cement and Concrete Product Manufacturing	9,969	$5,507,579	227,739	185,004	33,872	18.3%
3274	Lime and Gypsum Product Manufacturing	357	$18,475,560	17,935	15,101	3,268	21.6%
3279	Other Nonmetallic Mineral Product Manufacturing	3,344	$5,468,993	80,900	63,393	10,569	16.7%
3311	Iron and Steel Mills and Ferroalloy Manufacturing	827	$65,928,896	110,790	93,061	22,737	24.4%
3312	Steel Product Manufacturing from Purchased Steel	698	$21,605,469	47,069	36,966	4,190	11.3%
3313	Alumina and Aluminum Production and Processing	608	$47,054,339	65,387	55,270	9,800	17.7%
3314	Nonferrous Metal (except Aluminum) Production and Processing	945	$24,919,805	59,610	44,304	6,112	13.8%
3315	Foundries	2,207	$12,157,333	167,058	139,685	13,845	9.9%
3321	Forging and Stamping	2,720	$9,147,934	130,140	99,822	7,654	7.7%
3322	Cutlery and Handtool Manufacturing	1,502	$6,875,867	53,633	38,191	2,082	5.5%
3323	Architectural and Structural Metals Manufacturing	13,478	$5,273,124	396,098	296,479	37,319	12.6%

Table V-1, contd.
Profile of General Industry Establishments Covered by Subparts D and I

NAICS	NAICS Description	Establish-ments	Average Receipts per Establishment [a]	Total Employment	Production Employment [b]	Employment in Construction, Installation, Maintenance, and Repair Occupations	
						Number	Share of Prod. Employment
3324	Boiler, Tank, and Shipping Container Manufacturing	1,554	$17,390,735	87,497	56,784	N/A	N/A
3325	Hardware Manufacturing	828	$11,194,203	45,282	32,376	1,596	4.9%
3326	Spring and Wire Product Manufacturing	1,651	$5,585,199	55,759	41,942	1,933	4.6%
3327	Machine Shops; Turned Product; and Screw, Nut, and Bolt Manufacturing	24,860	$2,040,137	386,792	298,357	9,523	3.2%
3328	Coating, Engraving, Heat Treating, and Allied Activities	6,134	$3,426,310	136,411	108,329	5,605	5.2%
3329	Other Fabricated Metal Product Manufacturing	6,337	$8,770,725	272,101	186,186	15,541	8.3%
3331	Agriculture, Construction, and Mining Machinery Manufacturing	2,995	$20,488,525	194,899	137,163	10,659	7.8%
3332	Industrial Machinery Manufacturing	3,883	$7,725,192	131,927	68,269	6,420	9.4%
3333	Commercial and Service Industry Machinery Manufacturing	2,300	$9,406,943	95,489	47,977	4,882	10.2%
3334	Ventilation, Heating, Air-Conditioning, and Commercial Refrigeration Equipment Manufacturing	1,801	$19,910,908	150,277	112,267	12,921	11.5%
3335	Metalworking Machinery Manufacturing	8,181	$3,107,359	173,681	123,948	4,507	3.6%
3336	Engine, Turbine, and Power Transmission Equipment Manufacturing	915	$46,836,712	99,827	66,909	7,951	11.9%

Table V-1, contd.
Profile of General Industry Establishments Covered by Subparts D and I

NAICS	NAICS Description	Establish-ments	Average Receipts per Establishment [a]	Total Employment	Production Employment [b]	Employment in Construction, Installation, Maintenance, and Repair Occupations	
						Number	Share of Prod. Employment
3339	Other General Purpose Machinery Manufacturing	6,242	$10,364,603	280,571	175,993	16,123	9.2%
3341	Computer and Peripheral Equipment Manufacturing	1,323	$43,720,123	102,607	16,572	2,180	13.2%
3342	Communications Equipment Manufacturing	1,876	$36,209,046	152,679	46,763	5,982	12.8%
3343	Audio and Video Equipment Manufacturing	518	$14,666,519	18,939	8,186	564	6.9%
3344	Semiconductor and Other Electronic Component Manufacturing	4,772	$23,066,585	365,417	176,832	10,651	6.0%
3345	Navigational, Measuring, Electromedical, and Control Instruments Manufacturing	5,238	$20,026,780	384,856	123,582	11,800	9.5%
3346	Manufacturing and Reproducing Magnetic and Optical Media	821	$10,519,005	32,987	17,743	1,412	8.0%
3351	Electric Lighting Equipment Manufacturing	1,188	$11,180,632	56,797	39,009	2,820	7.2%
3352	Household Appliance Manufacturing	364	$60,184,733	74,585	50,109	3,244	6.5%
3353	Electrical Equipment Manufacturing	2,397	$13,373,183	138,511	91,165	6,374	7.0%
3359	Other Electrical Equipment and Component Manufacturing	2,160	$17,834,795	149,798	102,304	6,839	6.7%
3361	Motor Vehicle Manufacturing	370	$657,511,204	211,162	174,525	21,551	12.3%
3362	Motor Vehicle Body and Trailer Manufacturing	2,157	$15,581,739	155,649	129,584	10,831	8.4%

Table V-1, contd.
Profile of General Industry Establishments Covered by Subparts D and I

NAICS	NAICS Description	Establish-ments	Average Receipts per Establishment [a]	Total Employment	Production Employment [b]	Employment in Construction, Installation, Maintenance, and Repair Occupations	
						Number	Share of Prod. Employment
3363	Motor Vehicle Parts Manufacturing	5,556	$36,598,197	641,128	500,306	49,561	9.9%
3364	Aerospace Product and Parts Manufacturing	1,653	$89,563,292	397,933	181,978	40,749	22.4%
3365	Railroad Rolling Stock Manufacturing	211	$44,874,806	29,675	21,583	4,646	21.5%
3366	Ship and Boat Building	1,764	$13,764,238	142,057	103,443	27,309	26.4%
3369	Other Transportation Equipment Manufacturing	996	$16,837,953	44,923	32,737	2,679	8.2%
3371	Household and Institutional Furniture and Kitchen Cabinet Manufacturing	16,301	$2,845,652	354,341	288,472	22,235	7.7%
3372	Office Furniture (including Fixtures) Manufacturing	4,094	$5,722,951	143,102	105,671	7,217	6.8%
3379	Other Furniture Related Product Manufacturing	1,054	$8,178,416	45,816	34,075	1,489	4.4%
3391	Medical Equipment and Supplies Manufacturing	12,223	$6,107,312	314,015	197,458	7,070	3.6%
3399	Other Miscellaneous Manufacturing	19,016	$3,513,187	372,081	237,461	17,516	7.4%
4231	Motor Vehicle and Motor Vehicle Parts and Supplies Merchant Wholesalers	24,521	$31,354,335	367,505	166,210	53,010	31.9%
4232	Furniture and Home Furnishing Merchant Wholesalers	12,557	$7,064,656	158,027	52,657	4,127	7.8%
4233	Lumber and Other Construction Materials Merchant Wholesalers	18,940	$10,027,890	274,745	133,322	14,485	10.9%

Table V-1, contd.
Profile of General Industry Establishments Covered by Subparts D and I

NAICS	NAICS Description	Establish-ments	Average Receipts per Establishment [a]	Total Employment	Production Employment [b]	Employment in Construction, Installation, Maintenance, and Repair Occupations	
						Number	Share of Prod. Employment
4234	Professional and Commercial Equipment and Supplies Merchant Wholesalers	36,614	$13,020,195	723,687	148,046	74,444	50.3%
4235	Metal and Mineral (except Petroleum) Merchant Wholesalers	10,656	$14,644,310	158,317	80,310	4,297	5.3%
4236	Electrical and Electronic Goods Merchant Wholesalers	29,230	$13,954,419	466,457	100,502	34,204	34.0%
4237	Hardware, and Plumbing and Heating Equipment and Supplies Merchant Wholesalers	19,155	$6,412,786	231,219	67,442	17,308	25.7%
4238	Machinery, Equipment, and Supplies Merchant Wholesalers	59,039	$6,296,743	714,037	256,632	143,623	56.0%
4239	Miscellaneous Durable Goods Merchant Wholesalers	33,992	$5,977,921	336,259	142,847	17,691	12.4%
4241	Paper and Paper Product Merchant Wholesalers	11,755	$11,175,943	179,820	55,439	2,349	4.2%
4242	Drugs and Druggists' Sundries Merchant Wholesalers	7,634	$34,610,272	257,590	32,439	1,844	5.7%
4243	Apparel, Piece Goods, and Notions Merchant Wholesalers	15,680	$8,758,485	200,985	48,251	714	1.5%
4244	Grocery and Related Product Wholesalers	33,479	$19,821,047	770,899	407,561	17,827	4.4%
4245	Farm Product Raw Material Merchant Wholesalers	6,630	$18,364,754	62,173	38,210	1,317	3.4%
4246	Chemical and Allied Products Merchant Wholesalers	12,477	$9,847,751	141,225	51,281	5,772	11.3%

Table V-1, contd.
Profile of General Industry Establishments Covered by Subparts D and I

NAICS	NAICS Description	Establish-ments	Average Receipts per Establishment [a]	Total Employment	Production Employment [b]	Employment in Construction, Installation, Maintenance, and Repair Occupations	
						Number	Share of Prod. Employment
4247	Petroleum and Petroleum Products Merchant Wholesalers	7,175	$49,353,607	102,753	49,773	6,413	12.9%
4248	Beer, Wine, and Distilled Alcoholic Beverage Merchant Wholesalers	4,136	$25,249,332	178,869	70,900	2,233	3.1%
4249	Miscellaneous Nondurable Goods Merchant Wholesalers	31,788	$8,167,972	373,421	152,036	6,106	4.0%
4251	Wholesale Electronic Markets and Agents and Brokers	54,494	$5,145,093	332,659	61,002	13,042	21.4%
4411	Automobile Dealers	52,172	$14,366,952	1,286,788	511,806	326,353	63.8%
4412	Other Motor Vehicle Dealers	16,792	$3,798,159	167,374	63,763	50,382	79.0%
4413	Automotive Parts, Accessories, and Tire Stores	59,439	$1,337,738	493,354	222,874	157,588	70.7%
4421	Furniture Stores	29,245	$2,037,962	282,668	72,530	3,751	5.2%
4422	Home Furnishings Stores	36,609	$1,383,751	295,407	52,993	26,108	49.3%
4431	Electronics and Appliance Stores	49,323	$2,089,112	488,784	82,670	61,295	74.1%
4441	Building Material and Supplies Dealers	67,330	$4,395,212	1,190,989	251,146	47,115	18.8%
4442	Lawn and Garden Equipment and Supplies Stores	20,492	$1,847,574	175,415	68,828	18,088	26.3%
4451	Grocery Stores	94,176	$4,841,064	2,615,175	464,487	4,048	0.9%
4452	Specialty Food Stores	27,968	$625,965	168,728	41,339	753	1.8%
4453	Beer, Wine, and Liquor Stores	30,231	$1,116,580	142,586	5,103	124	2.4%
4461	Health and Personal Care Stores	87,026	$2,866,179	1,113,634	60,540	4,241	7.0%
4471	Gasoline Stations	116,855	$2,272,512	913,467	88,679	33,582	37.9%
4481	Clothing Stores	95,666	$1,567,430	1,259,686	40,721	777	1.9%
4482	Shoe Stores	26,699	$998,855	201,079	2,150	31	1.5%

Table V-1, contd.
Profile of General Industry Establishments Covered by Subparts D and I

NAICS	NAICS Description	Establish-ments	Average Receipts per Establishment [a]	Total Employment	Production Employment [b]	Employment in Construction, Installation, Maintenance, and Repair Occupations	
						Number	Share of Prod. Employment
4483	Jewelry, Luggage, and Leather Goods Stores	29,656	$991,170	170,685	15,704	1,748	11.1%
4511	Sporting Goods, Hobby, and Musical Instrument Stores	43,013	$1,382,881	442,281	32,452	16,648	51.3%
4512	Book, Periodical, and Music Stores	17,502	$1,331,320	195,732	2,677	176	6.6%
4521	Department Stores	9,969	$26,975,048	1,532,456	97,111	11,463	11.8%
4529	Other General Merchandise Stores	36,745	$7,905,058	1,269,995	139,416	20,840	14.9%
4531	Florists	20,227	$325,333	98,373	21,593	182	0.8%
4532	Office Supplies, Stationery, and Gift Stores	41,238	$1,065,158	337,789	22,619	10,593	46.8%
4533	Used Merchandise Stores	17,650	$541,375	133,533	18,718	1,270	6.8%
4539	Other Miscellaneous Store Retailers	45,977	$1,047,095	270,150	35,802	14,177	39.6%
4541	Electronic Shopping and Mail-Order Houses	16,230	$8,015,835	263,979	33,756	2,123	6.3%
4542	Vending Machine Operators	5,256	$1,345,227	51,645	30,142	16,645	55.2%
4543	Direct Selling Establishments	26,833	$1,781,365	206,114	110,690	32,337	29.2%
4811	Scheduled Air Transportation	3,072	$27,568,446	432,485	136,631	35,968	26.3%
4812	Nonscheduled Air Transportation	2,538	$4,983,338	42,289	24,981	6,909	27.7%
4831	Deep Sea, Coastal, and Great Lakes Water Transportation	1,262	$18,563,075	47,510	22,873	1,376	6.0%
4832	Inland Water Transportation	663	$7,369,971	20,928	16,654	629	3.8%
4841	General Freight Trucking	67,305	$2,179,183	1,049,957	868,948	49,841	5.7%
4842	Specialized Freight Trucking	52,958	$1,336,656	482,356	385,621	26,392	6.8%
4851	Urban Transit Systems	912	$3,163,984	49,414	41,850	5,324	12.7%

Table V-1, contd.
Profile of General Industry Establishments Covered by Subparts D and I

NAICS	NAICS Description	Establish-ments	Average Receipts per Establishment [a]	Total Employment	Production Employment [b]	Employment in Construction, Installation, Maintenance, and Repair Occupations	
						Number	Share of Prod. Employment
4852	Interurban and Rural Bus Transportation	475	$2,292,160	16,465	10,852	1,019	9.4%
4853	Taxi and Limousine Service	7,013	$758,126	69,226	49,525	1,746	3.5%
4854	School and Employee Bus Transportation	4,321	$1,780,332	194,765	167,606	6,698	4.0%
4855	Charter Bus Industry	1,207	$1,629,704	27,929	22,675	1,585	7.0%
4859	Other Transit and Ground Passenger Transportation	3,296	$1,025,226	60,919	46,438	1,813	3.9%
4861	Pipeline Transportation of Crude Oil	373	$15,628,109	7,529	4,388	1,491	34.0%
4862	Pipeline Transportation of Natural Gas	1,363	$15,036,768	22,248	11,192	4,546	40.6%
4869	Other Pipeline Transportation	917	$9,607,982	9,419	7,365	1,765	24.0%
4871	Scenic and Sightseeing Transportation, Land	678	$1,076,889	9,218	4,417	376	8.5%
4872	Scenic and Sightseeing Transportation, Water	1,857	$875,903	15,280	6,968	385	5.5%
4879	Scenic and Sightseeing Transportation, Other	185	$2,508,165	2,171	1,075	335	31.1%
4881	Support Activities for Air Transportation	5,174	$3,432,026	158,320	92,274	44,549	48.3%
4882	Support Activities for Rail Transportation	962	$3,451,614	28,090	23,624	9,497	40.2%
4883	Support Activities for Water Transportation	2,331	$5,519,986	91,795	74,809	5,656	7.6%
4884	Support Activities for Road Transportation	9,545	$669,810	71,831	51,284	3,923	7.7%

Table V-1, contd.
Profile of General Industry Establishments Covered by Subparts D and I

NAICS	NAICS Description	Establish-ments	Average Receipts per Establishment [a]	Total Employment	Production Employment [b]	Employment in Construction, Installation, Maintenance, and Repair Occupations	
						Number	Share of Prod. Employment
4885	Freight Transportation Arrangement	17,434	$2,204,247	198,326	43,795	1,940	4.4%
4889	Other Support Activities for Transportation	1,637	$2,426,030	31,227	22,544	950	4.2%
4921	Couriers	8,724	$7,426,946	525,610	388,495	12,977	3.3%
4922	Local Messengers and Local Delivery	5,066	$732,446	45,773	19,473	149	0.8%
4931	Warehousing and Storage	13,849	$5,990,263	595,325	392,261	18,718	4.8%
5111	Newspaper, Periodical, Book, and Directory Publishers	23,080	$6,508,148	699,906	135,170	5,668	4.2%
5112	Software Publishers	8,741	$13,922,013	339,833	4,827	2,276	47.2%
5121	Motion Picture and Video Industries	20,396	$4,114,085	308,750	11,872	2,634	22.2%
5122	Sound Recording Industries	3,565	$3,257,430	22,481	820	233	28.4%
5151	Radio and Television Broadcasting	9,910	$6,128,916	262,248	4,551	2,872	63.1%
5152	Cable and Other Subscription Programming	673	$35,828,634	39,735	10,883	10,646	97.8%
5161	Internet Publishing and Broadcasting	2,653	$6,525,331	41,588	N/A	N/A	N/A
5171	Wired Telecommunications Carriers	27,159	$8,279,458	634,540	218,709	214,137	97.9%
5172	Wireless Telecommunications Carriers (except Satellite)	12,108	$6,135,232	241,407	13,885	13,503	97.2%
5173	Telecommunications Resellers	2,557	$3,831,183	32,352	N/A	N/A	N/A
5174	Satellite Telecommunications	581	$10,533,017	11,514	1,786	1,786	100.0%
5175	Cable and Other Program Distribution	4,816	$13,161,700	231,756	N/A	N/A	N/A

Table V-1, contd.
Profile of General Industry Establishments Covered by Subparts D and I

NAICS	NAICS Description	Establish-ments	Average Receipts per Establishment [a]	Total Employment	Production Employment [b]	Employment in Construction, Installation, Maintenance, and Repair Occupations	
						Number	Share of Prod. Employment
5179	Other Telecommunications	541	$6,529,383	10,197	2,263	2,247	99.3%
5181	Internet Service Providers and Web Search Portals	5,572	$4,972,021	80,208	N/A	N/A	N/A
5182	Data Processing, Hosting, and Related Services	15,430	$4,799,373	385,110	12,762	5,078	39.8%
5191	Other Information Services	4,163	$1,509,730	54,621	1,456	222	15.3%
5211	Monetary Authorities - Central Bank	108	$274,330,879	20,019	651	428	65.7%
5221	Depository Credit Intermediation	120,588	$6,448,988	2,155,349	11,985	4,070	34.0%
5222	Nondepository Credit Intermediation	59,388	$8,333,142	765,267	3,409	1,299	38.1%
5223	Activities Related to Credit Intermediation	44,647	$2,161,669	360,912	1,885	1,065	56.5%
5231	Securities and Commodity Contracts Intermediation and Brokerage	39,360	$7,610,676	516,295	1,491	490	32.9%
5232	Securities and Commodity Exchanges	442	$11,417,563	8,526	383	149	38.9%
5239	Other Financial Investment Activities	46,752	$3,555,322	416,511	3,357	1,075	32.0%
5241	Insurance Carriers	34,417	$42,343,735	1,438,696	8,794	4,071	46.3%
5242	Agencies, Brokerages, and Other Insurance Related Activities	145,744	$1,161,943	939,126	3,941	1,138	28.9%
5259	Other Investment Pools and Funds	2,883	$10,933,178	26,397	763	327	42.9%
5311	Lessors of Real Estate	117,629	$1,184,281	544,635	229,957	145,070	63.1%
5312	Offices of Real Estate Agents and Brokers	114,041	$984,181	377,256	40,807	25,208	61.8%

Table V-1, contd.
Profile of General Industry Establishments Covered by Subparts D and I

NAICS	NAICS Description	Establish-ments	Average Receipts per Establishment [a]	Total Employment	Production Employment [b]	Employment in Construction, Installation, Maintenance, and Repair Occupations	
						Number	Share of Prod. Employment
5313	Activities Related to Real Estate	81,802	$1,005,517	631,478	201,842	124,674	61.8%
5321	Automotive Equipment Rental and Leasing	13,624	$3,056,687	184,468	84,896	24,341	28.7%
5322	Consumer Goods Rental	33,308	$739,777	253,627	41,794	7,689	18.4%
5323	General Rental Centers	5,569	$848,764	35,885	15,955	5,648	35.4%
5324	Commercial and Industrial Machinery and Equipment Rental and Leasing	13,818	$3,304,043	159,968	75,035	41,306	55.0%
5331	Lessors of Nonfinancial Intangible Assets (except Copyrighted Works)	2,337	$10,332,742	29,486	1,927	316	16.4%
5411	Legal Services	189,484	$1,165,746	1,219,383	5,352	583	10.9%
5412	Accounting, Tax Preparation, Bookkeeping, and Payroll Services	121,390	$970,564	1,356,770	26,504	7,473	28.2%
5413	Architectural, Engineering, and Related Services	115,277	$1,961,884	1,390,573	117,897	58,167	49.3%
5414	Specialized Design Services	33,755	$634,257	130,062	17,199	2,119	12.3%
5415	Computer Systems Design and Related Services	110,851	$2,016,788	1,215,296	27,215	20,251	74.4%
5416	Management, Scientific, and Technical Consulting Services	145,782	$1,228,565	1,039,301	65,298	26,079	39.9%
5417	Scientific Research and Development Services	17,153	$8,345,540	672,666	34,241	12,816	37.4%
5418	Advertising and Related Services	39,350	$1,814,725	433,800	38,461	7,132	18.5%
5419	Other Professional, Scientific, and Technical Services	73,431	$851,957	596,243	24,607	4,103	16.7%

Table V-1, contd.
Profile of General Industry Establishments Covered by Subparts D and I

NAICS	NAICS Description	Establish-ments	Average Receipts per Establishment [a]	Total Employment	Production Employment [b]	Employment in Construction, Installation, Maintenance, and Repair Occupations	
						Number	Share of Prod. Employment
5511	Management of Companies and Enterprises	48,311	$8,420,195	2,915,644	242,097	81,896	33.8%
5611	Office Administrative Services	29,228	$2,295,927	497,872	38,199	11,832	31.0%
5612	Facilities Support Services	4,115	$4,465,124	164,637	51,857	21,563	41.6%
5613	Employment Services	43,523	$4,127,040	5,101,697	2,478,063	361,451	14.6%
5614	Business Support Services	35,750	$1,746,545	778,731	18,101	4,546	25.1%
5615	Travel Arrangement and Reservation Services	23,268	$1,343,275	253,539	10,213	1,729	16.9%
5616	Investigation and Security Services	24,752	$1,631,472	802,010	65,852	57,213	86.9%
5617	Services to Buildings and Dwellings	176,310	$549,348	1,707,203	1,531,836	53,404	3.5%
5619	Other Support Services	21,470	$1,737,422	352,603	121,672	21,023	17.3%
5621	Waste Collection	8,890	$3,545,148	176,912	143,223	15,947	11.1%
5622	Waste Treatment and Disposal	2,759	$5,137,267	56,343	39,495	9,903	25.1%
5629	Remediation and Other Waste Management Services	8,270	$1,879,261	112,079	81,625	58,392	71.5%
6111	Elementary and Secondary Schools	20,570	$2,394,633	802,963	72,214	9,365	13.0%
6112	Junior Colleges	881	$3,867,039	85,892	4,830	1,466	30.3%
6113	Colleges, Universities, and Professional Schools	3,872	$32,761,430	1,534,226	117,250	39,759	33.9%
6114	Business Schools and Computer and Management Training	7,156	$1,247,327	67,537	1,579	476	30.2%
6115	Technical and Trade Schools	7,712	$1,523,403	119,970	8,857	2,494	28.2%
6116	Other Schools and Instruction	35,693	$410,958	292,730	5,279	1,527	28.9%
6117	Educational Support Services	6,763	$1,348,119	76,196	1,422	189	13.3%

Table V-1, contd.
Profile of General Industry Establishments Covered by Subparts D and I

NAICS	NAICS Description	Establish-ments	Average Receipts per Establishment [a]	Total Employment	Production Employment [b]	Employment in Construction, Installation, Maintenance, and Repair Occupations	
						Number	Share of Prod. Employment
6211	Offices of Physicians	216,620	$1,472,044	2,136,673	22,467	3,829	17.0%
6212	Offices of Dentists	124,553	$710,330	817,396	12,367	411	3.3%
6213	Offices of Other Health Practitioners	118,818	$436,205	589,355	8,700	628	7.2%
6214	Outpatient Care Centers	28,539	$2,969,216	692,430	15,538	4,664	30.0%
6215	Medical and Diagnostic Laboratories	12,063	$3,068,470	228,067	2,357	499	21.2%
6216	Home Health Care Services	21,576	$2,162,602	972,511	5,495	1,202	21.9%
6219	Other Ambulatory Health Care Services	8,738	$2,971,026	246,853	20,838	2,920	14.0%
6221	General Medical and Surgical Hospitals	5,320	$109,940,645	4,953,821	279,488	63,495	22.7%
6222	Psychiatric and Substance Abuse Hospitals	677	$24,296,943	216,745	15,489	4,959	32.0%
6223	Specialty (except Psychiatric and Substance Abuse) Hospitals	846	$25,662,093	199,974	10,503	2,480	23.6%
6231	Nursing Care Facilities	17,267	$4,947,927	1,640,524	169,519	21,780	12.8%
6232	Residential Mental Retardation, Mental Health and Substance Abuse Facilities	30,658	$763,353	553,058	20,857	5,229	25.1%
6233	Community Care Facilities for the Elderly	19,303	$1,699,891	640,128	72,757	13,831	19.0%
6239	Other Residential Care Facilities	6,648	$1,227,379	159,423	6,186	2,264	36.6%
6241	Individual and Family Services	55,656	$1,029,718	1,075,387	46,086	5,345	11.6%
6242	Community Food and Housing, and Emergency and Other Relief Services	13,021	$1,145,759	159,534	14,857	4,068	27.4%

Table V-1, contd.
Profile of General Industry Establishments Covered by Subparts D and I

NAICS	NAICS Description	Establish-ments	Average Receipts per Establishment [a]	Total Employment	Production Employment [b]	Employment in Construction, Installation, Maintenance, and Repair Occupations	
						Number	Share of Prod. Employment
6243	Vocational Rehabilitation Services	8,393	$1,452,550	338,121	78,281	3,752	4.8%
6244	Child Day Care Services	73,755	$371,692	831,361	17,660	1,699	9.6%
7111	Performing Arts Companies	9,195	$1,383,714	133,511	9,172	3,682	40.1%
7112	Spectator Sports	4,564	$5,969,303	120,281	19,417	6,972	35.9%
7113	Promoters of Performing Arts, Sports, and Similar Events	5,779	$2,195,804	107,105	20,164	4,253	21.1%
7114	Agents and Managers for Artists, Athletes, Entertainers, and Other Public Figures	3,494	$1,242,041	16,417	145	77	52.9%
7115	Independent Artists, Writers, and Performers	19,398	$587,069	47,600	3,889	996	25.6%
7121	Museums, Historical Sites, and Similar Institutions	7,089	$1,414,378	123,177	15,099	4,533	30.0%
7131	Amusement Parks and Arcades	2,927	$3,935,750	136,390	20,121	8,123	40.4%
7132	Gambling Industries	2,600	$10,415,846	195,977	22,600	5,976	26.4%
7139	Other Amusement and Recreation Industries	68,002	$826,561	1,093,197	210,259	43,709	20.8%
7211	Traveler Accommodation	53,290	$2,853,736	1,830,579	685,498	83,510	12.2%
7212	RV (Recreational Vehicle) Parks and Recreational Camps	7,190	$557,840	38,308	13,259	4,989	37.6%
7213	Rooming and Boarding Houses	2,245	$592,294	11,811	3,912	587	15.0%
7221	Full-Service Restaurants	213,550	$878,192	4,518,780	56,442	3,362	6.0%
7222	Limited-Service Eating Places	256,383	$658,733	4,073,818	186,084	4,363	2.3%
7223	Special Food Services	33,499	$1,113,710	546,347	48,646	5,505	11.3%
7224	Drinking Places (Alcoholic Beverages)	46,097	$395,658	361,583	6,288	709	11.3%

Table V-1, contd.
Profile of General Industry Establishments Covered by Subparts D and I

NAICS	NAICS Description	Establish-ments	Average Receipts per Establishment [a]	Total Employment	Production Employment [b]	Employment in Construction, Installation, Maintenance, and Repair Occupations	
						Number	Share of Prod. Employment
8111	Automotive Repair and Maintenance	164,334	$529,294	888,301	713,789	461,065	64.6%
8112	Electronic and Precision Equipment Repair and Maintenance	13,199	$1,373,334	127,477	75,896	66,349	87.4%
8113	Commercial and Industrial Machinery and Equipment (except Automotive and Electronic) Repair and Maintenance	24,589	$1,112,510	193,442	143,815	94,461	65.7%
8114	Personal and Household Goods Repair and Maintenance	23,413	$368,721	98,001	74,709	36,972	49.5%
8121	Personal Care Services	109,974	$236,768	612,980	6,790	366	5.4%
8122	Death Care Services	21,204	$718,757	136,806	29,518	1,584	5.4%
8123	Dry-cleaning and Laundry Services	42,270	$577,876	374,377	265,380	7,445	2.8%
8129	Other Personal Services	36,324	$499,974	233,628	106,715	3,116	2.9%
8131	Religious Organizations	174,530	$541,280	1,647,219	213,502	45,466	21.3%
8132	Grantmaking and Giving Services	16,086	$3,430,139	149,045	4,107	688	16.8%
8133	Social Advocacy Organizations	14,260	$1,059,616	122,910	6,460	1,551	24.0%
8134	Civic and Social Organizations	30,620	$572,399	328,324	21,759	3,399	15.6%
8139	Business, Professional, Labor, Political, and Similar Organizations	65,637	$1,095,583	546,048	55,539	23,714	42.7%
	Totals	6,744,565	N/A	112,008,852	27,974,888	5,269,819	18.8%

Table V-1, contd.
Profile of General Industry Establishments Covered by Subparts D and I

NAICS	NAICS Description	Establish-ments	Average Receipts per Establishment [a]	Total Employment	Production Employment [b]	Employment in Construction, Installation, Maintenance, and Repair Occupations	
						Number	Share of Prod. Employment

[a] Estimated based on 2002 receipts and payroll data from U.S. Census Bureau, *Statistics of U.S. Businesses*, 2002 and payroll data from U.S. Census Bureau, *Statistics of U.S. Businesses*, 2006. Receipts for 2006 were estimated assuming the ratio of receipts to payroll remained unchanged between 2002 and 2006.

[b] Based on the employment share of workers employed in building and grounds; construction; installation, maintenance, and repair; production; and material moving occupations as reported by BLS, *Occupational Employment Statistics*, 2008.

Source: U.S. Dept. of Labor, OSHA, Directorate of Evaluation and Analysis, Office of Regulatory Analysis, based on ERG, 2007; U.S. Census Bureau, *Statistics of U.S. Businesses*, 2002, 2006; and Bureau of Labor Statistics, *Occupational Employment Statistics*, 2008.

BILLING CODE 4510–29–C

Parts of the proposed standard that cover ladders, scaffolds, manhole steps, and other working surfaces are most likely to directly affect employees engaged in maintenance and related activities. To estimate the numbers of such employees, OSHA relied on data from Bureau of Labor Statistics' (BLS) *Occupational Employment Statistics* (OES) survey that documents employment by detailed occupation on a 4-digit NAICS industry basis. The BLS data represent the only source of industry-specific statistics on detailed occupational employment totals. OSHA used these data to estimate the numbers of employees in construction, and in maintenance, installation, and repair occupations in each industry and the overall number of production employees (ERG 2007, Ex. 6).[14]

Because industry employment totals reported by the OES are not identical to those estimated by the U.S. Census Bureau, OSHA used the ratios of production to total employment as reported by OES and multiplied total employment as reported by Census by this ratio to estimate the numbers of production employees and employees in maintenance-related occupations for each NAICS industry covered by the proposed subpart D and I standards. As shown in Table V–1, an estimated 28.0 million employees are employed in production occupations, while an estimated 5.3 million are employed in construction, installation, and maintenance and repair occupations.

Profile of Potentially Affected Small Entities

To assemble the data that are necessary for a screening analysis to judge potential impacts as prescribed by the Small Business Regulatory Enforcement Fairness Act (SBREFA), OSHA developed profiles of small entities in the industries covered by the proposed OSHA standards for subparts D and I. First, ERG used the Small Business Administration's (SBA) small business criterion for each industry and Census data (taken from the *Statistics of U.S. Businesses*) on employment, payroll, and receipts by entity size to estimate the numbers of entities and associated employment meeting the SBA definitions (ERG, 2007, Ex. 6). Where the SBA small business criterion was specified as a revenue threshold, OSHA used the Census data to associate that revenue with a given employment size. OSHA's estimates of SBA-based employment-size criteria are shown in the first column in Table V–2. The table shows, by NAICS category, the number of entities and employees and average receipts per entity for business units that meet the employment-size criterion. The numbers of at-risk employees are estimated assuming the same percentage of total employment as that derived in Table V–1.

Based on analysis by ERG (ERG, 2007, Ex. 6), OSHA also used the Census data to develop a profile of entities that employ fewer than 20 employees. These estimates are shown in Table V–3.

BILLING CODE 4510–29–P

[14] Production workers include those in building and grounds; construction; installation, maintenance, and repair; production; and material moving occupations. It is conceivable that employees in construction and related occupations, even though not employed by establishments in construction industries, might on occasion perform work that would be regulated by OSHA under its construction standards in § 1926. To the extent this is true, their employers might also be required to meet the requirements for fall protection and walking and working surfaces as specified in the construction standards.

Table V-2
Profile of General Industry Small Business Entities

NAICS	NAICS DESCRIPTION	SBA Employment Size Criterion [a]	Entities [b]	Average Receipts per Entity [c]	Total Employees	Estimated Employment in At-Risk Occupations [d]
1131	Timber Tract Operations	500	391	$1,358,331	1,863	N/A
1132	Forest Nurseries and Gathering of Forest Products	500	169	$835,023	1,521	N/A
1133	Logging	500	9,954	$905,349	58,477	2,525
1141	Fishing	20	1,963	$419,493	2,504	N/A
1142	Hunting and Trapping	20	331	$265,407	832	N/A
1153	Support Activities for Forestry	100	1,581	$673,432	8,844	N/A
2111	Oil and Gas Extraction	500	6,513	$6,018,985	45,753	9,331
2211	Electric Power Generation, Transmission and Distribution	20	627	$7,768,331	3,560	1,190
2212	Natural Gas Distribution	20	360	$9,483,461	1,736	522
2213	Water, Sewage and Other Systems	100	4,357	$1,055,245	21,415	4,709
3111	Animal Food Manufacturing	500	1,153	$10,049,222	24,013	1,716
3112	Grain and Oilseed Milling	500	419	$20,443,453	15,124	1,318
3113	Sugar and Confectionery Product Manufacturing	500	1,543	$4,171,065	30,724	2,630
3114	Fruit and Vegetable Preserving and Specialty Food Manufacturing	500	1,206	$11,860,248	51,814	4,698
3115	Dairy Product Manufacturing	500	1,008	$15,673,641	37,924	2,739
3116	Animal Slaughtering and Processing	500	3,044	$7,627,917	84,467	4,494
3117	Seafood Product Preparation and Packaging	500	553	$8,943,608	20,392	1,030
3118	Bakeries and Tortilla Manufacturing	500	9,170	$1,542,448	142,869	6,031
3119	Other Food Manufacturing	500	2,627	$7,971,176	80,534	4,748
3121	Beverage Manufacturing	500	2,921	$4,657,774	48,408	4,077
3122	Tobacco Manufacturing	500	80	$15,462,776	2,442	355
3131	Fiber, Yarn, and Thread Mills	500	283	$4,845,605	8,705	1,137

Table V-2, contd.
Profile of General Industry Small Business Entities

NAICS	NAICS DESCRIPTION	SBA Employment Size Criterion [a]	Entities [b]	Average Receipts per Entity [c]	Total Employees	Estimated Employment in At-Risk Occupations [d]
3132	Fabric Mills	500	1,107	$5,018,553	37,383	1,137
3133	Textile and Fabric Finishing and Fabric Coating Mills	500	1,281	$4,134,978	28,303	3,567
3141	Textile Furnishings Mills	500	2,381	$2,180,425	31,993	1,333
3149	Other Textile Product Mills	500	3,982	$1,712,785	59,829	1,718
3151	Apparel Knitting Mills	500	467	$3,541,300	15,549	2,571
3152	Cut and Sew Apparel Manufacturing	500	9,286	$1,875,985	137,898	1,190
3159	Apparel Accessories and Other Apparel Manufacturing	500	907	$1,684,270	13,360	1,199
3161	Leather and Hide Tanning and Finishing	500	237	$4,006,835	4,331	243
3162	Footwear Manufacturing	500	269	$2,610,054	5,553	197
3169	Other Leather and Allied Product Manufacturing	500	815	$2,099,196	12,592	126
3211	Sawmills and Wood Preservation	500	3,705	$4,968,801	83,498	115
3212	Veneer, Plywood, and Engineered Wood Product Manufacturing	500	1,456	$6,254,693	62,892	6,598
3219	Other Wood Product Manufacturing	500	9,431	$2,824,759	196,897	6,398
3221	Pulp, Paper, and Paperboard Mills	750	271	$179,036,154	101,241	24,454
3222	Converted Paper Product Manufacturing	750	2,996	$23,474,269	249,350	18,636
3231	Printing and Related Support Activities	500	31,581	$1,757,509	441,149	15,657
3241	Petroleum and Coal Products Manufacturing	500	1,049	$18,449,956	24,740	7,067
3251	Basic Chemical Manufacturing	500	1,159	$14,594,931	35,241	3,600
3252	Resin, Synthetic Rubber, and Artificial Synthetic Fibers and Filaments Manufacturing	750	719	$67,088,815	68,083	4,249
3253	Pesticide, Fertilizer, and Other Agricultural Chemical Manufacturing	500	622	$7,489,706	11,401	8,625
3254	Pharmaceutical and Medicine Manufacturing	500	1,335	$11,903,218	50,159	1,412
3255	Paint, Coating, and Adhesive Manufacturing	500	1,422	$6,152,968	29,856	2,271
3256	Soap, Cleaning Compound, and Toilet Preparation Manufacturing	500	1,949	$7,109,671	46,445	1,215

Table V-2, contd.
Profile of General Industry Small Business Entities

NAICS	NAICS DESCRIPTION	SBA Employment Size Criterion [a]	Entities [b]	Average Receipts per Entity [c]	Total Employees	Estimated Employment in At-Risk Occupations [d]
3259	Other Chemical Product and Preparation Manufacturing	500	2,004	$6,504,047	44,662	2,873
3261	Plastics Product Manufacturing	500	9,231	$6,062,317	345,971	19,182
3262	Rubber Product Manufacturing	500	1,622	$5,163,370	52,241	3,343
3271	Clay Product and Refractory Manufacturing	500	1,308	$2,635,824	25,306	2,000
3272	Glass and Glass Product Manufacturing	500	1,710	$2,460,234	29,930	2,816
3273	Cement and Concrete Product Manufacturing	500	5,045	$5,176,795	130,027	19,339
3274	Lime and Gypsum Product Manufacturing	500	209	$4,031,892	3,542	645
3279	Other Nonmetallic Mineral Product Manufacturing	500	2,789	$2,842,186	49,769	6,502
3311	Iron and Steel Mills and Ferroalloy Manufacturing	750	687	$58,252,886	82,270	16,884
3312	Steel Product Manufacturing from Purchased Steel	1000	550	$25,969,191	44,638	3,974
3313	Alumina and Aluminum Production and Processing	750	432	$50,853,839	51,035	7,649
3314	Nonferrous Metal (except Aluminum) Production and Processing	750	726	$25,717,142	47,678	4,888
3315	Foundries	500	1,825	$5,884,190	77,538	6,426
3321	Forging and Stamping	500	2,307	$6,270,743	83,059	4,885
3322	Cutlery and Handtool Manufacturing	500	1,321	$3,461,191	28,452	1,104
3323	Architectural and Structural Metals Manufacturing	500	12,255	$3,548,264	270,425	25,479
3324	Boiler, Tank, and Shipping Container Manufacturing	500	1,199	$6,512,422	42,857	N/A
3325	Hardware Manufacturing	500	682	$4,398,682	18,979	669
3326	Spring and Wire Product Manufacturing	500	1,423	$3,982,136	39,756	1,378
3327	Machine Shops; Turned Product; and Screw, Nut, and Bolt Manufacturing	500	24,251	$1,757,906	345,102	8,497
3328	Coating, Engraving, Heat Treating, and Allied Activities	500	5,471	$2,620,866	113,731	4,673
3329	Other Fabricated Metal Product Manufacturing	500	5,544	$3,765,931	127,400	7,276

Table V-2, contd.
Profile of General Industry Small Business Entities

NAICS	NAICS DESCRIPTION	SBA Employment Size Criterion [a]	Entities [b]	Average Receipts per Entity [c]	Total Employees	Estimated Employment in At-Risk Occupations [d]
3331	Agriculture, Construction, and Mining Machinery Manufacturing	500	2,531	$5,587,664	73,190	4,003
3332	Industrial Machinery Manufacturing	500	3,546	$4,551,450	84,949	4,134
3333	Commercial and Service Industry Machinery Manufacturing	500	2,021	$4,466,470	49,618	2,537
3334	Ventilation, Heating, Air-Conditioning, and Commercial Refrigeration Equipment Manufacturing	500	1,383	$6,248,917	46,872	4,030
3335	Metalworking Machinery Manufacturing	500	7,751	$2,382,254	138,837	3,603
3336	Engine, Turbine, and Power Transmission Equipment Manufacturing	500	677	$6,636,256	22,166	1,765
3339	Other General Purpose Machinery Manufacturing	500	5,307	$4,635,286	134,740	7,743
3341	Computer and Peripheral Equipment Manufacturing	1000	1,253	$42,895,671	95,600	2,031
3342	Communications Equipment Manufacturing	750	1,614	$32,432,225	120,836	4,734
3343	Audio and Video Equipment Manufacturing	750	493	$13,163,802	16,145	481
3344	Semiconductor and Other Electronic Component Manufacturing	500	4,007	$5,850,485	136,248	3,971
3345	Navigational, Measuring, Electromedical, and Control Instruments Manufacturing	500	4,276	$4,683,646	99,665	3,056
3346	Manufacturing and Reproducing Magnetic and Optical Media	500	753	$3,520,000	13,136	562
3351	Electric Lighting Equipment Manufacturing	500	1,060	$5,167,163	29,439	1,462
3352	Household Appliance Manufacturing	500	273	$9,457,971	8,303	361
3353	Electrical Equipment Manufacturing	750	2,027	$12,757,513	112,133	5,160
3359	Other Electrical Equipment and Component Manufacturing	500	1,680	$6,688,321	59,145	2,700
3361	Motor Vehicle Manufacturing	1000	294	$754,499,871	192,800	19,677
3362	Motor Vehicle Body and Trailer Manufacturing	500	1,790	$6,119,572	63,409	4,412

Table V-2, contd.
Profile of General Industry Small Business Entities

NAICS	NAICS DESCRIPTION	SBA Employment Size Criterion [a]	Entities [b]	Average Receipts per Entity [c]	Total Employees	Estimated Employment in At-Risk Occupations [d]
3363	Motor Vehicle Parts Manufacturing	500	4,100	$7,778,032	162,858	12,589
3364	Aerospace Product and Parts Manufacturing	1000	1,280	$106,021,841	365,780	37,456
3365	Railroad Rolling Stock Manufacturing	1000	156	$56,142,525	27,504	4,306
3366	Ship and Boat Building	500	1,587	$4,619,732	44,166	8,490
3369	Other Transportation Equipment Manufacturing	500	930	$3,608,050	18,088	1,079
3371	Household and Institutional Furniture and Kitchen Cabinet Manufacturing	500	15,751	$1,517,495	209,207	13,128
3372	Office Furniture (including Fixtures) Manufacturing	500	3,833	$3,289,859	95,092	4,795
3379	Other Furniture Related Product Manufacturing	500	893	$4,370,007	24,501	796
3391	Medical Equipment and Supplies Manufacturing	500	11,222	$1,991,284	146,829	3,306
3399	Other Miscellaneous Manufacturing	500	18,301	$2,265,972	268,273	12,629
4231	Motor Vehicle and Motor Vehicle Parts and Supplies Merchant Wholesalers	100	16,947	$3,982,634	158,553	22,870
4232	Furniture and Home Furnishing Merchant Wholesalers	100	10,534	$3,893,902	93,383	2,439
4233	Lumber and Other Construction Materials Merchant Wholesalers	100	12,053	$5,108,372	125,540	6,619
4234	Professional and Commercial Equipment and Supplies Merchant Wholesalers	100	25,574	$3,143,839	218,700	22,497
4235	Metal and Mineral (except Petroleum) Merchant Wholesalers	100	7,008	$7,602,393	76,449	2,075
4236	Electrical and Electronic Goods Merchant Wholesalers	100	18,906	$5,616,433	173,667	12,735
4237	Hardware, and Plumbing and Heating Equipment and Supplies Merchant Wholesalers	100	10,687	$4,924,677	112,079	8,390
4238	Machinery, Equipment, and Supplies Merchant Wholesalers	100	41,847	$3,758,547	397,706	79,996
4239	Miscellaneous Durable Goods Merchant Wholesalers	100	30,319	$3,743,447	206,436	10,861
4241	Paper and Paper Product Merchant Wholesalers	100	8,831	$3,843,726	75,470	986

Table V-2, contd.
Profile of General Industry Small Business Entities

NAICS	NAICS DESCRIPTION	SBA Employment Size Criterion [a]	Entities [b]	Average Receipts per Entity [c]	Total Employees	Estimated Employment in At-Risk Occupations [d]
4242	Drugs and Druggists' Sundries Merchant Wholesalers	100	5,771	$4,940,697	46,688	334
4243	Apparel, Piece Goods, and Notions Merchant Wholesalers	100	14,025	$4,050,696	104,550	371
4244	Grocery and Related Product Wholesalers	100	26,011	$5,663,995	246,923	5,710
4245	Farm Product Raw Material Merchant Wholesalers	100	3,917	$11,859,655	39,615	839
4246	Chemical and Allied Products Merchant Wholesalers	100	8,109	$4,728,950	67,260	2,749
4247	Petroleum and Petroleum Products Merchant Wholesalers	100	4,585	$17,758,022	50,746	3,167
4248	Beer, Wine, and Distilled Alcoholic Beverage Merchant Wholesalers	100	2,915	$5,153,337	51,552	643
4249	Miscellaneous Nondurable Goods Merchant Wholesalers	100	24,935	$3,194,974	177,451	2,901
4251	Wholesale Electronic Markets and Agents and Brokers	100	51,805	$2,671,669	198,899	7,798
4411	Automobile Dealers	20	32,728	$2,342,349	138,362	35,091
4412	Other Motor Vehicle Dealers	100	15,119	$3,211,634	135,960	40,926
4413	Automotive Parts, Accessories, and Tire Stores	100	33,491	$1,390,475	224,463	71,698
4421	Furniture Stores	100	20,814	$1,565,664	159,952	2,123
4422	Home Furnishings Stores	100	26,848	$1,498,171	146,864	12,980
4431	Electronics and Appliance Stores	20	29,639	$683,798	116,558	14,617
4441	Building Material and Supplies Dealers	100	45,150	$1,928,263	428,997	16,971
4442	Lawn and Garden Equipment and Supplies Stores	100	16,849	$1,700,097	130,105	13,416
4451	Grocery Stores	100	65,674	$1,085,339	515,110	797
4452	Specialty Food Stores	100	23,118	$1,021,657	129,811	579
4453	Beer, Wine, and Liquor Stores	100	26,694	$2,412,875	121,442	105
4461	Health and Personal Care Stores	100	43,486	$2,369,998	308,740	1,176
4471	Gasoline Stations	100	66,667	$2,630,686	456,927	16,798
4481	Clothing Stores	100	40,472	$1,001,691	210,551	130

Table V-2, contd.
Profile of General Industry Small Business Entities

NAICS	NAICS DESCRIPTION	SBA Employment Size Criterion [a]	Entities [b]	Average Receipts per Entity [c]	Total Employees	Estimated Employment in At-Risk Occupations [d]
4482	Shoe Stores	100	6,628	$1,231,651	42,233	7
4483	Jewelry, Luggage, and Leather Goods Stores	100	19,501	$1,703,784	86,712	888
4511	Sporting Goods, Hobby, and Musical Instrument Stores	100	31,727	$1,015,202	181,010	6,813
4512	Book, Periodical, and Music Stores	100	9,324	$751,979	52,895	48
4521	Department Stores	100	310	$2,145,052	1,913	14
4529	Other General Merchandise Stores	100	10,142	$652,509	54,739	898
4531	Florists	100	19,337	$715,722	93,332	173
4532	Office Supplies, Stationery, and Gift Stores	500	29,601	$579,606	175,305	5,498
4533	Used Merchandise Stores	100	12,837	$704,959	61,299	583
4539	Other Miscellaneous Store Retailers	100	36,894	$1,599,376	179,645	9,427
4541	Electronic Shopping and Mail-Order Houses	100	14,640	$1,662,070	95,814	770
4542	Vending Machine Operators	100	4,584	$857,851	26,351	8,493
4543	Direct Selling Establishments	20	19,468	$909,915	79,344	12,448
4811	Scheduled Air Transportation	1500	537	$153,586,642	421,206	35,030
4812	Nonscheduled Air Transportation	1500	2,342	$5,324,353	41,738	6,819
4831	Deep Sea, Coastal, and Great Lakes Water Transportation	500	826	$8,740,557	20,098	582
4832	Inland Water Transportation	500	563	$3,913,969	11,076	333
4841	General Freight Trucking	500	56,935	$1,173,314	459,626	21,818
4842	Specialized Freight Trucking	500	48,733	$1,058,496	376,396	20,594
4851	Urban Transit Systems	100	533	$500,073	7,184	774
4852	Interurban and Rural Bus Transportation	100	195	$748,442	2,459	152
4853	Taxi and Limousine Service	500	6,894	$641,423	55,722	1,405
4854	School and Employee Bus Transportation	100	2,788	$356,790	41,120	1,414
4855	Charter Bus Industry	500	1,087	$1,391,916	21,556	1,224
4859	Other Transit and Ground Passenger Transportation	500	2,974	$839,196	47,894	1,426
4861	Pipeline Transportation of Crude Oil	1500	55	$103,464,750	7,344	1,454

Table V-2, contd.
Profile of General Industry Small Business Entities

NAICS	NAICS DESCRIPTION	SBA Employment Size Criterion [a]	Entities [b]	Average Receipts per Entity [c]	Total Employees	Estimated Employment in At-Risk Occupations [d]
4862	Pipeline Transportation of Natural Gas	500	87	$31,024,724	1,834	375
4869	Other Pipeline Transportation	500	50	$10,746,871	868	163
4871	Scenic and Sightseeing Transportation, Land	500	609	$864,670	5,794	236
4872	Scenic and Sightseeing Transportation, Water	500	1,819	$577,460	9,605	242
4879	Scenic and Sightseeing Transportation, Other	100	172	$8,356,457	1,140	176
4881	Support Activities for Air Transportation	100	3,655	$1,197,858	30,965	8,713
4882	Support Activities for Rail Transportation	100	428	$1,564,525	5,779	1,954
4883	Support Activities for Water Transportation	100	1,680	$1,460,685	15,264	940
4884	Support Activities for Road Transportation	100	8,748	$723,521	52,911	2,890
4885	Freight Transportation Arrangement	100	12,524	$1,489,780	87,628	857
4889	Other Support Activities for Transportation	100	1,459	$709,514	9,583	292
4921	Couriers	1500	3,577	$17,649,286	512,361	12,650
4922	Local Messengers and Local Delivery	500	4,492	$624,776	34,611	113
4931	Warehousing and Storage	100	5,029	$1,249,091	57,146	1,797
5111	Newspaper, Periodical, Book, and Directory Publishers	500	16,475	$2,145,277	237,785	1,926
5112	Software Publishers	500	5,959	$3,589,364	113,676	761
5121	Motion Picture and Video Industries	500	16,854	$1,281,037	116,426	993
5122	Sound Recording Industries	100	3,271	$977,122	11,705	121
5151	Radio and Television Broadcasting	20	3,564	$548,141	22,395	245
5152	Cable and Other Subscription Programming	500	355	$7,411,465	7,089	1,899
5161	Internet Publishing and Broadcasting	500	2,310	$3,054,344	19,259	N/A
5171	Wired Telecommunications Carriers	1500	2,515	$87,147,431	618,739	208,804
5172	Wireless Telecommunications Carriers (except Satellite)	1500	2,516	$28,801,441	235,521	13,173
5173	Telecommunications Resellers	1500	2,278	$4,268,728	32,151	N/A
5174	Satellite Telecommunications	1000	434	$13,440,913	11,048	1,714
5175	Cable and Other Program Distribution	1000	1,141	$50,764,239	212,032	N/A

Table V-2, contd.
Profile of General Industry Small Business Entities

NAICS	NAICS DESCRIPTION	SBA Employment Size Criterion [a]	Entities [b]	Average Receipts per Entity [c]	Total Employees	Estimated Employment in At-Risk Occupations [d]
5179	Other Telecommunications	1000	439	$7,560,016	9,624	N/A
5181	Internet Service Providers and Web Search Portals	1000	4,907	$5,272,967	76,377	2,121
5182	Data Processing, Hosting, and Related Services	1000	7,545	$9,179,238	360,609	NA
5191	Other Information Services	1000	3,278	$1,825,276	52,575	4,755
5211	Monetary Authorities - Central Bank	1000	69	$391,956,231	18,284	214
5221	Depository Credit Intermediation	20	7,957	$1,426,482	56,849	391
5222	Nondepository Credit Intermediation	100	23,383	$1,295,717	137,424	107
5223	Activities Related to Credit Intermediation	20	26,458	$470,992	88,711	233
5231	Securities and Commodity Contracts Intermediation and Brokerage	100	12,818	$1,648,855	62,368	262
5232	Securities and Commodity Exchanges	100	121	$3,392,876	723	59
5239	Other Financial Investment Activities	100	40,791	$1,503,386	161,321	13
5241	Insurance Carriers	100	6,794	$3,526,365	51,354	416
5242	Agencies, Brokerages, and Other Insurance Related Activities	20	125,791	$412,500	400,858	145
5259	Other Investment Pools and Funds	20	1,957	$2,253,403	4,430	486
5311	Lessors of Real Estate	100	96,670	$1,538,159	366,476	55
5312	Offices of Real Estate Agents and Brokers	100	104,985	$1,365,819	269,224	97,615
5313	Activities Related to Real Estate	100	70,681	$694,879	347,638	17,990
5321	Automotive Equipment Rental and Leasing	500	4,637	$1,898,082	39,025	68,635
5322	Consumer Goods Rental	100	12,468	$681,190	85,463	5,149
5323	General Rental Centers	100	3,274	$1,060,723	22,587	2,591
5324	Commercial and Industrial Machinery and Equipment Rental and Leasing	100	8,257	$1,684,919	63,378	3,555
5331	Lessors of Nonfinancial Intangible Assets (except Copyrighted Works)	100	2,042	$2,502,187	14,545	16,365
5411	Legal Services	100	179,461	$838,109	827,785	156

Table V-2, contd.
Profile of General Industry Small Business Entities

NAICS	NAICS DESCRIPTION	SBA Employment Size Criterion [a]	Entities [b]	Average Receipts per Entity [c]	Total Employees	Estimated Employment in At-Risk Occupations [d]
5412	Accounting, Tax Preparation, Bookkeeping, and Payroll Services	500	106,052	$526,380	670,224	3,692
5413	Architectural, Engineering, and Related Services	100	98,506	$909,552	679,440	28,421
5414	Specialized Design Services	100	33,315	$1,016,776	114,397	1,863
5415	Computer Systems Design and Related Services	500	99,612	$1,094,463	667,253	11,119
5416	Management, Scientific, and Technical Consulting Services	100	135,799	$860,226	482,394	12,105
5417	Scientific Research and Development Services	100	12,136	$1,369,412	109,342	2,083
5418	Advertising and Related Services	500	35,826	$1,193,136	267,848	4,404
5419	Other Professional, Scientific, and Technical Services	500	64,641	$717,471	464,059	3,193
5511	Management of Companies and Enterprises	100	11,297	$1,297,120	83,770	2,353
5611	Office Administrative Services	100	23,645	$927,293	173,677	4,127
5612	Facilities Support Services	500	1,461	$2,654,253	40,843	5,349
5613	Employment Services	100	19,487	$710,473	317,504	22,495
5614	Business Support Services	100	28,919	$633,315	208,234	1,216
5615	Travel Arrangement and Reservation Services	100	17,100	$663,308	91,069	621
5616	Investigation and Security Services	100	18,290	$517,965	166,788	11,898
5617	Services to Buildings and Dwellings	100	167,989	$502,977	927,727	29,021
5619	Other Support Services	100	18,548	$1,027,259	128,098	7,637
5621	Waste Collection	500	7,107	$1,675,887	81,378	7,335
5622	Waste Treatment and Disposal	100	1,448	$1,497,636	13,380	2,352
5629	Remediation and Other Waste Management Services	100	7,317	$1,007,071	64,952	33,839
6111	Elementary and Secondary Schools	100	16,071	$811,723	421,759	4,919
6112	Junior Colleges	500	416	$3,944,210	32,113	548
6113	Colleges, Universities, and Professional Schools	100	1,153	$1,089,358	21,324	553
6114	Business Schools and Computer and Management Training	100	6,453	$831,992	37,674	266

Table V-2, contd.
Profile of General Industry Small Business Entities

NAICS	NAICS DESCRIPTION	SBA Employment Size Criterion [a]	Entities [b]	Average Receipts per Entity [c]	Total Employees	Estimated Employment in At-Risk Occupations [d]
6115	Technical and Trade Schools	500	6,540	$995,542	72,177	1,500
6116	Other Schools and Instruction	100	33,336	$391,277	223,347	1,165
6117	Educational Support Services	100	5,912	$800,171	33,513	83
6211	Offices of Physicians	100	188,192	$1,260,678	1,375,232	2,464
6212	Offices of Dentists	100	119,272	$2,366,865	777,326	391
6213	Offices of Other Health Practitioners	100	108,034	$831,272	464,068	494
6214	Outpatient Care Centers	500	13,215	$2,495,388	351,404	2,367
6215	Medical and Diagnostic Laboratories	500	7,614	$2,479,489	114,232	250
6216	Home Health Care Services	20	8,985	$363,853	41,669	51
6219	Other Ambulatory Health Care Services	100	5,283	$850,208	77,717	919
6221	General Medical and Surgical Hospitals	20	140	$5,508,604	384	5
6222	Psychiatric and Substance Abuse Hospitals	20	58	$795,944	224	5
6223	Specialty (except Psychiatric and Substance Abuse) Hospitals	20	135	$689,853	416	5
6231	Nursing Care Facilities	500	8,294	$4,563,312	775,960	10,302
6232	Residential Mental Retardation, Mental Health and Substance Abuse Facilities	100	5,926	$539,229	110,435	1,044
6233	Community Care Facilities for the Elderly	100	12,990	$468,789	191,515	4,138
6239	Other Residential Care Facilities	100	3,054	$519,419	51,122	726
6241	Individual and Family Services	100	36,613	$501,766	417,534	2,075
6242	Community Food and Housing, and Emergency and Other Relief Services	100	8,773	$908,040	103,564	2,641
6243	Vocational Rehabilitation Services	100	3,514	$708,258	61,128	678
6244	Child Day Care Services	100	58,234	$280,939	585,304	1,196
7111	Performing Arts Companies	500	9,019	$1,158,422	111,327	3,070
7112	Spectator Sports	100	4,153	$820,666	28,028	1,625

Table V-2, contd.
Profile of General Industry Small Business Entities

NAICS	NAICS DESCRIPTION	SBA Employment Size Criterion [a]	Entities [b]	Average Receipts per Entity [c]	Total Employees	Estimated Employment in At-Risk Occupations [d]
7113	Promoters of Performing Arts, Sports, and Similar Events	20	4,923	$735,781	16,006	636
7114	Agents and Managers for Artists, Athletes, Entertainers, and Other Public Figures	500	3,436	$1,071,924	14,606	68
7115	Independent Artists, Writers, and Performers	500	19,366	$565,122	43,514	910
7121	Museums, Historical Sites, and Similar Institutions	100	6,324	$820,340	68,077	2,505
7131	Amusement Parks and Arcades	100	2,271	$583,626	21,479	1,279
7132	Gambling Industries	500	1,967	$4,603,454	67,418	2,056
7139	Other Amusement and Recreation Industries	100	60,550	$461,606	604,187	24,157
7211	Traveler Accommodation	100	41,352	$627,347	483,604	22,062
7212	RV (Recreational Vehicle) Parks and Recreational Camps	100	6,534	$869,875	29,600	3,855
7213	Rooming and Boarding Houses	100	2,150	$862,100	9,850	489
7221	Full-Service Restaurants	500	184,085	$663,408	2,958,645	2,201
7222	Limited-Service Eating Places	100	166,087	$397,861	1,764,729	1,890
7223	Special Food Services	100	14,317	$446,029	123,885	1,248
7224	Drinking Places (Alcoholic Beverages)	100	45,317	$464,178	323,081	633
8111	Automotive Repair and Maintenance	100	150,385	$1,066,079	743,034	385,665
8112	Electronic and Precision Equipment Repair and Maintenance	20	10,849	$405,349	37,711	19,628
8113	Commercial and Industrial Machinery and Equipment (except Automotive and Electronic) Repair and Maintenance	100	22,686	$916,044	130,586	63,767
8114	Personal and Household Goods Repair and Maintenance	500	22,293	$323,780	76,369	28,811
8121	Personal Care Services	100	94,703	$329,434	470,019	280
8122	Death Care Services	20	14,892	$542,767	71,409	827

Table V-2, contd.
Profile of General Industry Small Business Entities

NAICS	NAICS DESCRIPTION	SBA Employment Size Criterion [a]	Entities [b]	Average Receipts per Entity [c]	Total Employees	Estimated Employment in At-Risk Occupations [d]
8123	Dry-cleaning and Laundry Services	20	32,044	$222,017	133,052	2,646
8129	Other Personal Services	20	24,454	$277,069	79,054	1,055
8131	Religious Organizations	20	156,829	$241,464	733,176	20,237
8132	Grantmaking and Giving Services	20	12,660	$1,753,057	46,534	215
8133	Social Advocacy Organizations	20	10,750	$491,583	47,106	594
8134	Civic and Social Organizations	20	25,609	$325,191	117,622	1,218
8139	Business, Professional, Labor, Political, and Similar Organizations	20	58,330	$493,062	242,744	10,542
	Totals		5,084,864		43,515,995	2,375,598

[a] SBA criteria specified in dollar terms converted to size-class definition based on average revenues for establishment size categories. The most restrictive criteria for 6-digit NAICS were applied to the 4-digit NAICS level.
[b] U.S. Census Bureau, *Statistics of U.S. Businesses,* 2006.
[c] Estimated based on 2002 receipts and payroll data from U.S. Census Bureau, *Statistics of U.S. Businesses*, 2002 and payroll data from U.S. Census Bureau, *Statistics of U.S. Businesses*, 2006. Receipts for 2006 were estimated assuming the ratio of receipts to payroll remained unchanged between 2002 and 2006.
[d] Assumes same share of production workers in construction, installation, maintenance, and repair occupations as shown in Table V-1.
N/A: Data not available.
Source: U.S. Dept. of Labor, OSHA, Directorate of Evaluation and Analysis, Office of Regulatory Analysis, based on ERG, 2007; SBA, 2006; U.S. Census Bureau, *Statistics of U.S. Businesses*, 2002, 2006; and Bureau of Labor Statistics, *Occupational Employment Statistics*, 2008.

Table V-3
Profile of General Industry Entities With Fewer Than 20 Employees

NAICS	NAICS DESCRIPTION	Entities [a]	Average Receipts per Entity [b]	Total Employees	Estimated Employment in At-Risk Occupations [c]
1131	Timber Tract Operations	372	$1,042,497	1,255	N/A
1132	Forest Nurseries and Gathering of Forest Products	149	$540,355	531	N/A
1133	Logging	9,426	$656,987	40,805	1,762
1141	Fishing	1,963	$419,493	2,504	NA
1142	Hunting and Trapping	331	$265,407	N/A	NA
1153	Support Activities for Forestry	1,462	$413,988	4,166	NA
2111	Oil and Gas Extraction	6,063	$2,073,096	20,661	4,214
2211	Electric Power Generation, Transmission and Distribution	627	$7,768,331	3,560	1,190
2212	Natural Gas Distribution	360	$9,483,461	1,736	522
2213	Water, Sewage and Other Systems	4,202	$483,840	15,972	3,512
3111	Animal Food Manufacturing	799	$2,511,440	5,084	363
3112	Grain and Oilseed Milling	249	$3,567,683	1,602	140
3113	Sugar and Confectionery Product Manufacturing	1,204	$700,303	6,987	598
3114	Fruit and Vegetable Preserving and Specialty Food Manufacturing	689	$1,644,885	4,131	375
3115	Dairy Product Manufacturing	601	$1,975,717	3,521	254
3116	Animal Slaughtering and Processing	2,223	$1,546,836	11,976	637
3117	Seafood Product Preparation and Packaging	344	$2,399,770	2,017	102
3118	Bakeries and Tortilla Manufacturing	7,422	$432,835	42,347	1,788
3119	Other Food Manufacturing	1,684	$1,605,131	9,717	573
3121	Beverage Manufacturing	2,330	$974,487	11,020	928
3122	Tobacco Manufacturing	51	$1,534,247	201	29
3131	Fiber, Yarn, and Thread Mills	182	$993,969	923	121

Table V-3, contd.
Profile of General Industry Entities With Fewer Than 20 Employees

NAICS	NAICS DESCRIPTION	Entities [a]	Average Receipts per Entity [b]	Total Employees	Estimated Employment in At-Risk Occupations [c]
3132	Fabric Mills	720	$912,031	4,098	391
3133	Textile and Fabric Finishing and Fabric Coating Mills	967	$1,301,062	5,133	242
3141	Textile Furnishings Mills	2,024	$857,756	9,018	484
3149	Other Textile Product Mills	3,275	$522,100	16,342	702
3151	Apparel Knitting Mills	289	$677,446	1,680	129
3152	Cut and Sew Apparel Manufacturing	7,536	$499,945	36,841	320
3159	Apparel Accessories and Other Apparel Manufacturing	725	$468,390	3,126	57
3161	Leather and Hide Tanning and Finishing	188	$658,199	895	41
3162	Footwear Manufacturing	202	$600,000	958	22
3169	Other Leather and Allied Product Manufacturing	673	$499,474	3,159	29
3211	Sawmills and Wood Preservation	2,620	$1,148,174	16,633	1,314
3212	Veneer, Plywood, and Engineered Wood Product Manufacturing	710	$1,211,573	5,492	559
3219	Other Wood Product Manufacturing	6,911	$790,961	40,323	5,008
3221	Pulp, Paper, and Paperboard Mills	86	$2,402,528	450	83
3222	Converted Paper Product Manufacturing	1,412	$1,789,932	10,270	645
3231	Printing and Related Support Activities	26,463	$538,272	135,078	2,164
3241	Petroleum and Coal Products Manufacturing	689	$3,145,204	3,662	533
3251	Basic Chemical Manufacturing	682	$3,214,155	3,545	427
3252	Resin, Synthetic Rubber, and Artificial Synthetic Fibers and Filaments Manufacturing	340	$2,346,595	2,137	271
3253	Pesticide, Fertilizer, and Other Agricultural Chemical Manufacturing	449	$2,362,918	2,632	326
3254	Pharmaceutical and Medicine Manufacturing	828	$2,018,489	4,579	207
3255	Paint, Coating, and Adhesive Manufacturing	989	$1,686,655	6,309	257
3256	Soap, Cleaning Compound, and Toilet Preparation Manufacturing	1,417	$2,139,182	8,230	555
3259	Other Chemical Product and Preparation Manufacturing	1,402	$1,512,793	8,118	522

Table V-3, contd.
Profile of General Industry Entities With Fewer Than 20 Employees

NAICS	NAICS DESCRIPTION	Entities [a]	Average Receipts per Entity [b]	Total Employees	Estimated Employment in At-Risk Occupations [c]
3261	Plastics Product Manufacturing	5,216	$1,196,576	35,886	1,990
3262	Rubber Product Manufacturing	968	$927,457	6,184	396
3271	Clay Product and Refractory Manufacturing	1,008	$475,655	4,455	352
3272	Glass and Glass Product Manufacturing	1,376	$572,692	6,260	589
3273	Cement and Concrete Product Manufacturing	3,214	$1,297,929	22,406	3,332
3274	Lime and Gypsum Product Manufacturing	163	$1,377,646	909	166
3279	Other Nonmetallic Mineral Product Manufacturing	2,074	$872,705	12,795	1,672
3311	Iron and Steel Mills and Ferroalloy Manufacturing	473	$2,384,007	2,170	445
3312	Steel Product Manufacturing from Purchased Steel	272	$1,302,285	1,430	127
3313	Alumina and Aluminum Production and Processing	209	$1,892,177	1,166	175
3314	Nonferrous Metal (except Aluminum) Production and Processing	431	$1,518,778	2,548	261
3315	Foundries	992	$838,695	6,829	566
3321	Forging and Stamping	1,265	$1,147,023	9,291	546
3322	Cutlery and Handtool Manufacturing	973	$776,879	5,673	220
3323	Architectural and Structural Metals Manufacturing	8,656	$904,217	54,551	5,140
3324	Boiler, Tank, and Shipping Container Manufacturing	638	$1,397,929	4,283	N/A
3325	Hardware Manufacturing	438	$1,009,933	2,714	96
3326	Spring and Wire Product Manufacturing	923	$921,330	6,139	213
3327	Machine Shops; Turned Product; and Screw, Nut, and Bolt Manufacturing	19,544	$608,300	111,422	2,743
3328	Coating, Engraving, Heat Treating, and Allied Activities	3,871	$636,257	26,269	1,079
3329	Other Fabricated Metal Product Manufacturing	3,893	$930,587	23,034	1,316
3331	Agriculture, Construction, and Mining Machinery Manufacturing	1,634	$1,393,622	10,459	572
3332	Industrial Machinery Manufacturing	2,414	$1,048,966	15,222	741
3333	Commercial and Service Industry Machinery Manufacturing	1,403	$1,035,382	7,991	409

Table V-3, contd.
Profile of General Industry Entities With Fewer Than 20 Employees

NAICS	NAICS DESCRIPTION	Entities [a]	Average Receipts per Entity [b]	Total Employees	Estimated Employment in At-Risk Occupations [c]
3334	Ventilation, Heating, Air-Conditioning, and Commercial Refrigeration Equipment Manufacturing	826	$1,240,826	5,171	445
3335	Metalworking Machinery Manufacturing	5,799	$708,301	37,199	965
3336	Engine, Turbine, and Power Transmission Equipment Manufacturing	407	$1,434,900	2,694	215
3339	Other General Purpose Machinery Manufacturing	3,516	$1,153,184	23,183	1,332
3341	Computer and Peripheral Equipment Manufacturing	841	$1,346,955	4,408	94
3342	Communications Equipment Manufacturing	973	$1,228,500	5,728	224
3343	Audio and Video Equipment Manufacturing	369	$1,139,851	1,922	57
3344	Semiconductor and Other Electronic Component Manufacturing	2,333	$1,918,228	14,985	437
3345	Navigational, Measuring, Electromedical, and Control Instruments Manufacturing	2,962	$1,084,021	16,635	510
3346	Manufacturing and Reproducing Magnetic and Optical Media	614	$917,675	2,847	122
3351	Electric Lighting Equipment Manufacturing	704	$1,083,508	4,179	208
3352	Household Appliance Manufacturing	189	$2,514,418	857	37
3353	Electrical Equipment Manufacturing	1,309	$1,222,154	7,897	363
3359	Other Electrical Equipment and Component Manufacturing	1,035	$1,380,209	6,537	298
3361	Motor Vehicle Manufacturing	181	$3,328,498	823	84
3362	Motor Vehicle Body and Trailer Manufacturing	1,042	$1,124,469	6,874	478
3363	Motor Vehicle Parts Manufacturing	2,540	$1,258,272	13,998	1,082
3364	Aerospace Product and Parts Manufacturing	730	$1,103,351	4,338	444
3365	Railroad Rolling Stock Manufacturing	75	$1,659,673	506	79
3366	Ship and Boat Building	1,152	$871,756	5,814	1,118
3369	Other Transportation Equipment Manufacturing	738	$844,592	3,399	203
3371	Household and Institutional Furniture and Kitchen Cabinet Manufacturing	13,501	$501,615	66,403	4,167
3372	Office Furniture (including Fixtures) Manufacturing	2,534	$790,967	16,255	820

Table V-3, contd.
Profile of General Industry Entities With Fewer Than 20 Employees

NAICS	NAICS DESCRIPTION	Entities [a]	Average Receipts per Entity [b]	Total Employees	Estimated Employment in At-Risk Occupations [c]
3379	Other Furniture Related Product Manufacturing	592	$864,897	3,459	112
3391	Medical Equipment and Supplies Manufacturing	9,659	$482,439	41,316	930
3399	Other Miscellaneous Manufacturing	14,922	$657,802	75,085	3,535
4231	Motor Vehicle and Motor Vehicle Parts and Supplies Merchant Wholesalers	14,546	$2,323,453	68,215	9,839
4232	Furniture and Home Furnishing Merchant Wholesalers	9,117	$2,539,117	41,348	1,080
4233	Lumber and Other Construction Materials Merchant Wholesalers	10,007	$3,169,719	50,454	2,660
4234	Professional and Commercial Equipment and Supplies Merchant Wholesalers	22,418	$1,832,558	102,037	10,496
4235	Metal and Mineral (except Petroleum) Merchant Wholesalers	5,765	$5,153,468	30,447	826
4236	Electrical and Electronic Goods Merchant Wholesalers	16,322	$3,446,632	79,418	5,824
4237	Hardware, and Plumbing and Heating Equipment and Supplies Merchant Wholesalers	8,931	$2,612,048	48,507	3,631
4238	Machinery, Equipment, and Supplies Merchant Wholesalers	35,906	$2,209,959	185,702	37,353
4239	Miscellaneous Durable Goods Merchant Wholesalers	27,590	$2,160,892	108,180	5,692
4241	Paper and Paper Product Merchant Wholesalers	7,732	$2,316,826	35,987	470
4242	Drugs and Druggists' Sundries Merchant Wholesalers	5,112	$2,864,916	21,660	155
4243	Apparel, Piece Goods, and Notions Merchant Wholesalers	12,590	$2,307,551	50,086	178
4244	Grocery and Related Product Wholesalers	22,264	$3,687,332	101,010	2,336
4245	Farm Product Raw Material Merchant Wholesalers	3,217	$7,387,810	17,400	369
4246	Chemical and Allied Products Merchant Wholesalers	7,069	$2,927,863	32,389	1,324
4247	Petroleum and Petroleum Products Merchant Wholesalers	3,505	$8,414,357	19,358	1,208
4248	Beer, Wine, and Distilled Alcoholic Beverage Merchant Wholesalers	2,010	$2,692,914	10,307	129
4249	Miscellaneous Nondurable Goods Merchant Wholesalers	22,457	$1,851,390	90,728	1,483
4251	Wholesale Electronic Markets and Agents and Brokers	50,014	$2,087,205	138,964	5,448
4411	Automobile Dealers	32,728	$2,342,349	138,362	35,091

Table V-3, contd.
Profile of General Industry Entities With Fewer Than 20 Employees

NAICS	NAICS DESCRIPTION	Entities [a]	Average Receipts per Entity [b]	Total Employees	Estimated Employment in At-Risk Occupations [c]
4412	Other Motor Vehicle Dealers	13,140	$1,811,908	66,353	19,973
4413	Automotive Parts, Accessories, and Tire Stores	31,293	$725,592	153,946	49,174
4421	Furniture Stores	18,894	$874,249	93,466	1,240
4422	Home Furnishings Stores	25,517	$736,311	105,000	9,280
4431	Electronics and Appliance Stores	29,639	$683,798	116,558	14,617
4441	Building Material and Supplies Dealers	39,068	$1,110,284	218,625	8,649
4442	Lawn and Garden Equipment and Supplies Stores	15,134	$951,435	75,541	7,790
4451	Grocery Stores	58,462	$705,988	230,995	358
4452	Specialty Food Stores	21,668	$534,194	85,519	382
4453	Beer, Wine, and Liquor Stores	25,919	$834,237	98,420	85
4461	Health and Personal Care Stores	40,170	$1,224,825	199,735	761
4471	Gasoline Stations	62,033	$1,367,209	307,125	11,291
4481	Clothing Stores	38,587	$472,506	148,488	92
4482	Shoe Stores	6,189	$587,087	27,263	4
4483	Jewelry, Luggage, and Leather Goods Stores	18,976	$634,747	68,933	706
4511	Sporting Goods, Hobby, and Musical Instrument Stores	29,986	$527,845	123,468	4,647
4512	Book, Periodical, and Music Stores	8,788	$405,848	34,452	31
4521	Department Stores	285	$2,028,973	1,038	8
4529	Other General Merchandise Stores	9,608	$465,676	36,049	592
4531	Florists	18,784	$267,511	76,408	142
4532	Office Supplies, Stationery, and Gift Stores	27,832	$374,565	105,910	3,321
4533	Used Merchandise Stores	12,195	$364,560	41,115	391
4539	Other Miscellaneous Store Retailers	35,275	$708,846	130,427	6,844
4541	Electronic Shopping and Mail-Order Houses	13,418	$1,024,129	51,279	412
4542	Vending Machine Operators	4,261	$488,307	14,444	4,655

Table V-3, contd.
Profile of General Industry Entities With Fewer Than 20 Employees

NAICS	NAICS DESCRIPTION	Entities [a]	Average Receipts per Entity [b]	Total Employees	Estimated Employment in At-Risk Occupations [c]
4543	Direct Selling Establishments	19,468	$909,915	79,344	12,448
4811	Scheduled Air Transportation	341	$1,915,351	1,371	114
4812	Nonscheduled Air Transportation	1,945	$980,514	6,777	1,107
4831	Deep Sea, Coastal, and Great Lakes Water Transportation	627	$1,913,053	2,929	85
4832	Inland Water Transportation	445	$1,060,115	1,896	57
4841	General Freight Trucking	51,793	$492,740	157,198	7,462
4842	Specialized Freight Trucking	44,397	$514,923	159,820	8,744
4851	Urban Transit Systems	410	$318,546	1,968	212
4852	Interurban and Rural Bus Transportation	158	$474,151	671	42
4853	Taxi and Limousine Service	6,242	$316,462	22,269	562
4854	School and Employee Bus Transportation	2,065	$222,943	11,030	379
4855	Charter Bus Industry	749	$480,027	4,314	245
4859	Other Transit and Ground Passenger Transportation	2,321	$300,662	11,173	333
4861	Pipeline Transportation of Crude Oil	23	$7,841,011	0	N/A
4862	Pipeline Transportation of Natural Gas	65	$8,473,335	238	49
4869	Other Pipeline Transportation	38	$973,115	0	N/A
4871	Scenic and Sightseeing Transportation, Land	520	$511,438	0	N/A
4872	Scenic and Sightseeing Transportation, Water	1,701	$348,304	4,190	106
4879	Scenic and Sightseeing Transportation, Other	154	$1,097,495	0	N/A
4881	Support Activities for Air Transportation	3,193	$681,456	14,170	3,987
4882	Support Activities for Rail Transportation	330	$1,092,860	1,978	669
4883	Support Activities for Water Transportation	1,423	$734,759	5,365	331
4884	Support Activities for Road Transportation	8,160	$383,444	34,377	1,878
4885	Freight Transportation Arrangement	11,478	$929,721	48,823	477
4889	Other Support Activities for Transportation	1,335	$450,632	4,797	146

Table V-3, contd.
Profile of General Industry Entities With Fewer Than 20 Employees

NAICS	NAICS DESCRIPTION	Entities [a]	Average Receipts per Entity [b]	Total Employees	Estimated Employment in At-Risk Occupations [c]
4921	Couriers	3,123	$478,633	10,620	262
4922	Local Messengers and Local Delivery	4,097	$370,274	14,181	46
4931	Warehousing and Storage	3,739	$817,283	18,898	594
5111	Newspaper, Periodical, Book, and Directory Publishers	13,904	$594,111	62,961	510
5112	Software Publishers	4,545	$878,688	22,467	150
5121	Motion Picture and Video Industries	15,602	$691,722	42,925	366
5122	Sound Recording Industries	3,172	$483,788	8,204	85
5151	Radio and Television Broadcasting	3,564	$548,141	22,395	245
5152	Cable and Other Subscription Programming	298	$1,143,210	1,320	354
5161	Internet Publishing and Broadcasting	2,086	$1,119,239	6,706	NA
5171	Wired Telecommunications Carriers	1,828	$1,459,785	9,022	3,045
5172	Wireless Telecommunications Carriers (except Satellite)	2,209	$838,384	8,015	448
5173	Telecommunications Resellers	1,956	$1,049,862	7,526	N/A
5174	Satellite Telecommunications	349	$1,414,733	1,331	207
5175	Cable and Other Program Distribution	938	$960,466	4,065	NA
5179	Other Telecommunications	375	$1,073,822	1,329	293
5181	Internet Service Providers and Web Search Portals	4,407	$583,023	15,408	N/A
5182	Data Processing, Hosting, and Related Services	5,747	$665,882	24,238	320
5191	Other Information Services	2,858	$341,896	12,344	50
5211	Monetary Authorities - Central Bank	41	$4,209,924	241	5
5221	Depository Credit Intermediation	7,957	$1,426,482	56,849	107
5222	Nondepository Credit Intermediation	21,695	$687,001	73,491	125
5223	Activities Related to Credit Intermediation	26,458	$470,992	88,711	262
5231	Securities and Commodity Contracts Intermediation and Brokerage	12,099	$1,005,409	35,731	34
5232	Securities and Commodity Exchanges	110	$1,737,742	242	4

Table V-3, contd.
Profile of General Industry Entities With Fewer Than 20 Employees

NAICS	NAICS DESCRIPTION	Entities [a]	Average Receipts per Entity [b]	Total Employees	Estimated Employment in At-Risk Occupations [c]
5239	Other Financial Investment Activities	39,095	$790,122	105,034	271
5241	Insurance Carriers	6,133	$1,513,149	22,932	65
5242	Agencies, Brokerages, and Other Insurance Related Activities	125,791	$412,500	400,858	486
5259	Other Investment Pools and Funds	1,957	$2,253,403	4,430	55
5311	Lessors of Real Estate	93,546	$688,364	264,797	70,532
5312	Offices of Real Estate Agents and Brokers	103,231	$562,942	208,386	13,924
5313	Activities Related to Real Estate	66,691	$410,803	197,767	39,046
5321	Automotive Equipment Rental and Leasing	4,120	$799,082	13,989	1,846
5322	Consumer Goods Rental	11,393	$357,361	49,302	1,495
5323	General Rental Centers	2,984	$561,152	14,810	2,331
5324	Commercial and Industrial Machinery and Equipment Rental and Leasing	7,333	$933,862	30,397	7,849
5331	Lessors of Nonfinancial Intangible Assets (except Copyrighted Works)	1,829	$1,448,873	6,605	71
5411	Legal Services	172,259	$477,566	558,419	267
5412	Accounting, Tax Preparation, Bookkeeping, and Payroll Services	100,204	$295,688	339,731	1,871
5413	Architectural, Engineering, and Related Services	89,960	$524,593	351,966	14,723
5414	Specialized Design Services	32,491	$471,675	86,977	1,417
5415	Computer Systems Design and Related Services	92,442	$433,571	247,165	4,119
5416	Management, Scientific, and Technical Consulting Services	130,867	$430,968	300,198	7,533
5417	Scientific Research and Development Services	10,458	$897,588	41,730	795
5418	Advertising and Related Services	32,970	$640,602	115,450	1,898
5419	Other Professional, Scientific, and Technical Services	59,744	$473,846	252,870	1,740
5511	Management of Companies and Enterprises	5,747	$1,953,117	14,705	413
5611	Office Administrative Services	20,907	$579,648	73,227	1,740
5612	Facilities Support Services	964	$605,093	4,231	554

Table V-3, contd.
Profile of General Industry Entities With Fewer Than 20 Employees

NAICS	NAICS DESCRIPTION	Entities [a]	Average Receipts per Entity [b]	Total Employees	Estimated Employment in At-Risk Occupations [c]
5613	Employment Services	14,182	$424,208	60,235	4,268
5614	Business Support Services	26,155	$411,143	101,459	592
5615	Travel Arrangement and Reservation Services	16,178	$337,452	55,506	378
5616	Investigation and Security Services	15,858	$341,475	65,877	4,699
5617	Services to Buildings and Dwellings	157,597	$280,997	536,381	16,779
5619	Other Support Services	16,890	$644,887	65,046	3,878
5621	Waste Collection	6,066	$685,531	30,704	2,768
5622	Waste Treatment and Disposal	1,254	$939,758	6,657	1,170
5629	Remediation and Other Waste Management Services	6,382	$612,001	29,656	15,450
6111	Elementary and Secondary Schools	7,948	$403,654	61,666	719
6112	Junior Colleges	190	$482,860	969	17
6113	Colleges, Universities, and Professional Schools	798	$647,987	3,984	103
6114	Business Schools and Computer and Management Training	5,953	$467,803	18,916	133
6115	Technical and Trade Schools	5,624	$442,268	27,704	576
6116	Other Schools and Instruction	30,637	$232,484	128,585	671
6117	Educational Support Services	5,479	$417,247	17,307	43
6211	Offices of Physicians	172,296	$691,072	801,708	1,437
6212	Offices of Dentists	115,748	$636,477	674,036	339
6213	Offices of Other Health Practitioners	104,920	$324,507	357,896	381
6214	Outpatient Care Centers	8,987	$671,759	47,422	319
6215	Medical and Diagnostic Laboratories	6,215	$944,552	28,007	61
6216	Home Health Care Services	8,985	$363,853	41,669	51
6219	Other Ambulatory Health Care Services	3,890	$565,007	21,749	257
6221	General Medical and Surgical Hospitals	140	$5,508,604	384	5
6222	Psychiatric and Substance Abuse Hospitals	58	$795,944	224	5

Table V-3, contd.
Profile of General Industry Entities With Fewer Than 20 Employees

NAICS	NAICS DESCRIPTION	Entities [a]	Average Receipts per Entity [b]	Total Employees	Estimated Employment in At-Risk Occupations [c]
6223	Specialty (except Psychiatric and Substance Abuse) Hospitals	135	$689,853	416	5
6231	Nursing Care Facilities	2,032	$627,712	9,247	123
6232	Residential Mental Retardation, Mental Health and Substance Abuse Facilities	3,904	$320,106	24,050	227
6233	Community Care Facilities for the Elderly	9,635	$288,026	51,045	1,103
6239	Other Residential Care Facilities	2,080	$335,674	13,533	192
6241	Individual and Family Services	29,805	$317,820	140,999	701
6242	Community Food and Housing, and Emergency and Other Relief Services	6,970	$527,136	39,879	1,017
6243	Vocational Rehabilitation Services	2,407	$393,289	12,180	135
6244	Child Day Care Services	49,004	$170,304	280,532	573
7111	Performing Arts Companies	7,944	$532,181	27,513	759
7112	Spectator Sports	3,761	$579,847	12,529	726
7113	Promoters of Performing Arts, Sports, and Similar Events	4,923	$735,781	16,006	636
7114	Agents and Managers for Artists, Athletes, Entertainers, and Other Public Figures	3,318	$709,692	8,377	39
7115	Independent Artists, Writers, and Performers	19,062	$526,157	30,134	630
7121	Museums, Historical Sites, and Similar Institutions	5,519	$366,794	22,954	845
7131	Amusement Parks and Arcades	1,921	$385,510	8,203	489
7132	Gambling Industries	1,421	$721,012	8,273	252
7139	Other Amusement and Recreation Industries	51,143	$324,600	228,183	9,123
7211	Traveler Accommodation	33,190	$444,833	184,989	8,439
7212	RV (Recreational Vehicle) Parks and Recreational Camps	6,059	$423,680	18,390	2,395
7213	Rooming and Boarding Houses	2,077	$270,597	7,849	390
7221	Full-Service Restaurants	138,277	$314,523	847,722	631
7222	Limited-Service Eating Places	138,820	$266,342	756,485	810

Table V-3, contd.
Profile of General Industry Entities With Fewer Than 20 Employees

NAICS	NAICS DESCRIPTION	Entities [a]	Average Receipts per Entity [b]	Total Employees	Estimated Employment in At-Risk Occupations [c]
7223	Special Food Services	12,449	$304,973	51,898	523
7224	Drinking Places (Alcoholic Beverages)	41,469	$253,492	187,874	368
8111	Automotive Repair and Maintenance	144,622	$404,700	559,219	290,258
8112	Electronic and Precision Equipment Repair and Maintenance	10,849	$405,349	37,711	19,628
8113	Commercial and Industrial Machinery and Equipment (except Automotive and Electronic) Repair and Maintenance	21,337	$505,809	85,313	41,660
8114	Personal and Household Goods Repair and Maintenance	21,812	$265,334	60,999	23,013
8121	Personal Care Services	90,681	$155,065	332,784	199
8122	Death Care Services	14,892	$542,767	71,409	827
8123	Dry-cleaning and Laundry Services	32,044	$222,017	133,052	2,646
8129	Other Personal Services	24,454	$277,069	79,054	1,055
8131	Religious Organizations	156,829	$241,464	733,176	20,237
8132	Grantmaking and Giving Services	12,660	$1,753,057	46,534	215
8133	Social Advocacy Organizations	10,750	$491,583	47,106	594
8134	Civic and Social Organizations	25,609	$325,191	117,622	1,218
8139	Business, Professional, Labor, Political, and Similar Organizations	58,330	$493,062	242,744	10,542
	Totals	4,616,620		18,802,762	1,065,239

[a] U.S. Census Bureau, *Statistics of U.S. Businesses*, 2006.

[b] Estimated based on 2002 receipts and payroll data from U.S. Census Bureau, *Statistics of U.S. Businesses*, 2002 and payroll data from U.S. Census Bureau, *Statistics of U.S. Businesses*, 2006. Receipts are not reported for 2006, but were estimated assuming the ratio of receipts to payroll remained unchanged between 2002 and 2006.

[c] Assumes same share of production workers in construction, installation, maintenance, and repair occupations as shown in Table V-1.

N/A: Data not available.

Table V-3, contd.
Profile of General Industry Entities With Fewer Than 20 Employees

NAICS	NAICS DESCRIPTION	Entities [a]	Average Receipts per Entity [b]	Total Employees	Estimated Employment in At-Risk Occupations [c]

Source: U.S. Dept. of Labor, OSHA, Directorate of Evaluation and Analysis, Office of Regulatory Analysis, based on ERG, 2007; U.S. Census Bureau, *Statistics of U.S. Businesses*, 2002, 2006; Bureau of Labor Statistics, *Occupational Employment Statistics*, 2008.

BILLING CODE 4510–29–C

Employees Using Fall Protection

Based on analysis by ERG (ERG, 2007, Ex. 6), OSHA estimated the numbers of employees using fall protection equipment by extrapolating results obtained from OSHA's 1999 PPE Cost Survey. This establishment-based survey provided industry-specific estimates of the numbers of workers who used various types of personal protective equipment, including body harnesses and body belts.[15] The survey reported the percent of employees in each industry (SIC classification) that used these equipment types. ERG extrapolated the survey findings by first associating the SIC industries covered by the survey with 4-digit NAICS industries and then multiplying the equipment use percentages by total employment (presented above in Table V–1).

Because the same employees might use both body harnesses and body belts, OSHA used the maximum value of the two percentages in deriving these estimates. For example, if for a given industry, six percent of employees were estimated using body harnesses while four percent were estimated to use body belts, OSHA used the larger statistic (six percent) as its estimate of the share of employees using fall protection. Also, the survey's design did not permit industry-specific estimates for all industries. For example, only aggregated estimates are available for several groups of service, wholesale, and retail trade industries. To make the fall protection estimates consistent with the numbers of at-risk employees, OSHA constrained the estimated number of employees using fall protection in any industry to be less than or equal to the numbers of employees in construction, installation, maintenance, and repair occupations shown in Table V–1. Table V–4 presents, by 4-digit NAICS industry, OSHA's estimate of the number of employees using fall protection equipment. Overall, an estimated 1.6 million employees in general industry use fall protection.

Wage Rates

As will be discussed in detail later in this PEA, OSHA anticipates that much of the cost impact of the proposed standard is associated with the time requirements for additional training and inspections. Estimates for these costs depend on the opportunity cost of the labor hours that would otherwise be devoted to productive activities. Such opportunity costs are typically valued in terms of employees' hourly wages, adjusted for benefit and fringe costs. ERG relied on average hourly earnings as reported by the BLS Occupational Employment Statistics Survey and constructed a weighted average hourly wage for the specific occupations comprising production employment. ERG similarly constructed an average hourly production supervisor wage for each industry. These wages were then inflated by a factor to account for fringe benefits. According to a recent BLS survey, this mark-up factor averaged 43.5 percent.[16] The loaded wage rates applied by OSHA in this preliminary economic analysis are shown in Table V–5.

BILLING CODE 4510–29–P

[15] For a description of the survey, see Eastern Research Group, *PPE Cost Survey: Final Report.* Task Order 3, Base Year, DOL Contract No. J–9–F–9–0010. June 23, 1999 (Exhibit 14, OSHA Docket S–042: Costs of Personal Protective Equipment). Back support belts and similar ergonomic devices were explicitly excluded from the types of personal protective equipment investigated by the survey.

[16] BLS, *Employer Costs for Employee Compensation—June 2008.* Accessed September 10, 2008.

Table V-4
Estimated Number of Employees Using Fall Protection Equipment

NAICS	NAICS DESCRIPTION	Total Employment	Employees Using Fall Protection [a]		
			Percent	Number [c]	
1131	Timber Tract Operations	2,806	6.9%	N/A	
1132	Forest Nurseries and Gathering of Forest Products	2,098	9.7%	N/A	
1133	Logging	61,400	1.8%	1,075	
1141	Fishing	5,646	N/A	N/A	
1142	Hunting and Trapping	1,875	N/A	N/A	
1153	Support Activities for Forestry	13,491	9.7%	N/A	
2111	Oil and Gas Extraction	92,683	22.9%	18,902	[b]
2211	Electric Power Generation, Transmission and Distribution	493,670	10.4%	51,379	
2212	Natural Gas Distribution	78,813	10.4%	8,203	
2213	Water, Sewage and Other Systems	41,944	10.4%	4,365	
3111	Animal Food Manufacturing	48,173	1.9%	928	
3112	Grain and Oilseed Milling	53,724	1.9%	1,035	
3113	Sugar and Confectionery Product Manufacturing	72,604	1.9%	1,399	
3114	Fruit and Vegetable Preserving and Specialty Food Manufacturing	164,330	1.9%	3,166	
3115	Dairy Product Manufacturing	130,253	1.9%	2,510	
3116	Animal Slaughtering and Processing	503,800	1.9%	9,707	
3117	Seafood Product Preparation and Packaging	35,894	1.9%	692	
3118	Bakeries and Tortilla Manufacturing	288,393	1.9%	5,557	
3119	Other Food Manufacturing	161,567	1.9%	3,113	
3121	Beverage Manufacturing	134,206	1.9%	2,586	
3122	Tobacco Manufacturing	20,887	2.7%	560	
3131	Fiber, Yarn, and Thread Mills	48,240	1.8%	887	
3132	Fabric Mills	91,959	1.8%	1,690	
3133	Textile and Fabric Finishing and Fabric Coating Mills	47,567	1.8%	874	
3141	Textile Furnishings Mills	81,060	1.8%	1,490	
3149	Other Textile Product Mills	74,526	1.8%	1,370	
3151	Apparel Knitting Mills	30,784	1.6%	479	
3152	Cut and Sew Apparel Manufacturing	168,283	1.6%	1,463	[b]
3159	Apparel Accessories and Other Apparel Manufacturing	17,171	1.6%	267	
3161	Leather and Hide Tanning and Finishing	5,807	1.6%	95	
3162	Footwear Manufacturing	16,616	1.6%	271	
3169	Other Leather and Allied Product Manufacturing	16,174	1.6%	148	[b]

Table V-4, contd.
Estimated Number of Employees Using Fall Protection Equipment

NAICS	NAICS DESCRIPTION	Total Employment	Employees Using Fall Protection [a]		
			Percent	Number [c]	
3211	Sawmills and Wood Preservation	118,483	1.8%	2,074	
3212	Veneer, Plywood, and Engineered Wood Product Manufacturing	124,472	1.8%	2,179	
3219	Other Wood Product Manufacturing	333,551	1.8%	5,838	
3221	Pulp, Paper, and Paperboard Mills	138,756	6.1%	8,454	
3222	Converted Paper Product Manufacturing	302,674	6.1%	18,440	
3231	Printing and Related Support Activities	641,011	1.8%	10,268	[b]
3241	Petroleum and Coal Products Manufacturing	102,997	16.4%	14,987	[b]
3251	Basic Chemical Manufacturing	161,324	16.8%	19,450	[b]
3252	Resin, Synthetic Rubber, and Artificial Synthetic Fibers and Filaments Manufacturing	86,294	16.8%	10,932	[b]
3253	Pesticide, Fertilizer, and Other Agricultural Chemical Manufacturing	29,748	16.8%	3,685	[b]
3254	Pharmaceutical and Medicine Manufacturing	249,743	16.8%	11,310	[b]
3255	Paint, Coating, and Adhesive Manufacturing	67,337	16.8%	2,741	[b]
3256	Soap, Cleaning Compound, and Toilet Preparation Manufacturing	105,506	16.8%	7,114	[b]
3259	Other Chemical Product and Preparation Manufacturing	105,112	16.8%	6,762	[b]
3261	Plastics Product Manufacturing	740,254	1.5%	11,129	
3262	Rubber Product Manufacturing	160,588	1.5%	2,414	
3271	Clay Product and Refractory Manufacturing	53,521	6.5%	3,501	
3272	Glass and Glass Product Manufacturing	102,364	6.5%	6,696	
3273	Cement and Concrete Product Manufacturing	227,739	6.5%	14,898	
3274	Lime and Gypsum Product Manufacturing	17,935	6.5%	1,173	
3279	Other Nonmetallic Mineral Product Manufacturing	80,900	6.5%	5,292	
3311	Iron and Steel Mills and Ferroalloy Manufacturing	110,790	7.2%	7,971	
3312	Steel Product Manufacturing from Purchased Steel	47,069	7.2%	3,387	
3313	Alumina and Aluminum Production and Processing	65,387	7.2%	4,705	
3314	Nonferrous Metal (except Aluminum) Production and Processing	59,610	7.2%	4,289	
3315	Foundries	167,058	2.4%	4,029	
3321	Forging and Stamping	130,140	2.4%	3,138	
3322	Cutlery and Handtool Manufacturing	53,633	2.4%	1,293	
3323	Architectural and Structural Metals Manufacturing	396,098	2.4%	9,552	
3324	Boiler, Tank, and Shipping Container Manufacturing	87,497	2.4%	2,110	
3325	Hardware Manufacturing	45,282	2.4%	1,092	
3326	Spring and Wire Product Manufacturing	55,759	2.4%	1,345	
3327	Machine Shops; Turned Product; and Screw, Nut, and Bolt Manufacturing	386,792	2.4%	9,327	

Table V-4, contd.
Estimated Number of Employees Using Fall Protection Equipment

NAICS	NAICS DESCRIPTION	Total Employment	Employees Using Fall Protection [a]		
			Percent	Number [c]	
3328	Coating, Engraving, Heat Treating, and Allied Activities	136,411	2.4%	3,290	
3329	Other Fabricated Metal Product Manufacturing	272,101	2.4%	6,562	
3331	Agriculture, Construction, and Mining Machinery Manufacturing	194,899	2.7%	5,211	
3332	Industrial Machinery Manufacturing	131,927	2.7%	3,527	
3333	Commercial and Service Industry Machinery Manufacturing	95,489	2.7%	2,553	
3334	Ventilation, Heating, Air-Conditioning, and Commercial Refrigeration Equipment Manufacturing	150,277	2.7%	4,018	
3335	Metalworking Machinery Manufacturing	173,681	2.7%	4,507	[b]
3336	Engine, Turbine, and Power Transmission Equipment Manufacturing	99,827	2.7%	2,669	
3339	Other General Purpose Machinery Manufacturing	280,571	2.7%	7,502	
3341	Computer and Peripheral Equipment Manufacturing	102,607	2.4%	2,180	[b]
3342	Communications Equipment Manufacturing	152,679	2.4%	3,668	
3343	Audio and Video Equipment Manufacturing	18,939	2.4%	455	
3344	Semiconductor and Other Electronic Component Manufacturing	365,417	2.4%	8,778	
3345	Navigational, Measuring, Electromedical, and Control Instruments Manufacturing	384,856	2.4%	9,245	
3346	Manufacturing and Reproducing Magnetic and Optical Media	32,987	2.4%	792	
3351	Electric Lighting Equipment Manufacturing	56,797	2.4%	1,364	
3352	Household Appliance Manufacturing	74,585	2.4%	1,792	
3353	Electrical Equipment Manufacturing	138,511	2.4%	3,327	
3359	Other Electrical Equipment and Component Manufacturing	149,798	2.4%	3,599	
3361	Motor Vehicle Manufacturing	211,162	2.5%	5,316	
3362	Motor Vehicle Body and Trailer Manufacturing	155,649	2.5%	3,918	
3363	Motor Vehicle Parts Manufacturing	641,128	2.5%	16,141	
3364	Aerospace Product and Parts Manufacturing	397,933	2.5%	10,018	
3365	Railroad Rolling Stock Manufacturing	29,675	2.5%	747	
3366	Ship and Boat Building	142,057	36.2%	27,309	[b]
3369	Other Transportation Equipment Manufacturing	44,923	2.5%	1,131	
3371	Household and Institutional Furniture and Kitchen Cabinet Manufacturing	354,341	1.7%	6,046	
3372	Office Furniture (including Fixtures) Manufacturing	143,102	1.7%	2,442	
3379	Other Furniture Related Product Manufacturing	45,816	1.7%	782	
3391	Medical Equipment and Supplies Manufacturing	314,015	2.5%	7,070	[b]

Table V-4, contd.
Estimated Number of Employees Using Fall Protection Equipment

NAICS	NAICS DESCRIPTION	Total Employment	Employees Using Fall Protection [a]		
			Percent	Number [c]	
3399	Other Miscellaneous Manufacturing	372,081	2.8%	10,497	
4231	Motor Vehicle and Motor Vehicle Parts and Supplies Merchant Wholesalers	367,505	4.5%	16,432	
4232	Furniture and Home Furnishing Merchant Wholesalers	158,027	4.5%	4,127	[b]
4233	Lumber and Other Construction Materials Merchant Wholesalers	274,745	4.5%	12,284	
4234	Professional and Commercial Equipment and Supplies Merchant Wholesalers	723,687	4.5%	32,357	
4235	Metal and Mineral (except Petroleum) Merchant Wholesalers	158,317	4.5%	4,297	[b]
4236	Electrical and Electronic Goods Merchant Wholesalers	466,457	4.5%	20,856	
4237	Hardware, and Plumbing and Heating Equipment and Supplies Merchant Wholesalers	231,219	4.5%	10,338	
4238	Machinery, Equipment, and Supplies Merchant Wholesalers	714,037	4.5%	31,925	
4239	Miscellaneous Durable Goods Merchant Wholesalers	336,259	4.5%	15,035	
4241	Paper and Paper Product Merchant Wholesalers	179,820	4.1%	2,349	[b]
4242	Drugs and Druggists' Sundries Merchant Wholesalers	257,590	4.1%	1,844	[b]
4243	Apparel, Piece Goods, and Notions Merchant Wholesalers	200,985	4.1%	714	[b]
4244	Grocery and Related Product Wholesalers	770,899	4.1%	17,827	[b]
4245	Farm Product Raw Material Merchant Wholesalers	62,173	4.1%	1,317	[b]
4246	Chemical and Allied Products Merchant Wholesalers	141,225	4.1%	5,772	[b]
4247	Petroleum and Petroleum Products Merchant Wholesalers	102,753	4.1%	4,249	
4248	Beer, Wine, and Distilled Alcoholic Beverage Merchant Wholesalers	178,869	4.1%	2,233	[b]
4249	Miscellaneous Nondurable Goods Merchant Wholesalers	373,421	4.1%	6,106	[b]
4251	Wholesale Electronic Markets and Agents and Brokers	332,659	4.1%	13,042	[b]
4411	Automobile Dealers	1,286,788	2.4%	30,940	
4412	Other Motor Vehicle Dealers	167,374	2.4%	4,024	
4413	Automotive Parts, Accessories, and Tire Stores	493,354	2.4%	11,862	
4421	Furniture Stores	282,668	2.4%	3,751	[b]
4422	Home Furnishings Stores	295,407	2.4%	7,069	
4431	Electronics and Appliance Stores	488,784	2.4%	11,696	
4441	Building Material and Supplies Dealers	1,190,989	2.0%	23,479	
4442	Lawn and Garden Equipment and Supplies Stores	175,415	2.0%	3,458	

Table V-4, contd.
Estimated Number of Employees Using Fall Protection Equipment

NAICS	NAICS DESCRIPTION	Total Employment	Employees Using Fall Protection [a]		
			Percent	Number [c]	
4451	Grocery Stores	2,615,175	2.1%	4,048	[b]
4452	Specialty Food Stores	168,728	2.1%	753	[b]
4453	Beer, Wine, and Liquor Stores	142,586	2.1%	124	[b]
4461	Health and Personal Care Stores	1,113,634	2.1%	4,241	[b]
4471	Gasoline Stations	913,467	2.1%	18,807	
4481	Clothing Stores	1,259,686	2.5%	777	[b]
4482	Shoe Stores	201,079	2.5%	31	[b]
4483	Jewelry, Luggage, and Leather Goods Stores	170,685	2.5%	1,748	[b]
4511	Sporting Goods, Hobby, and Musical Instrument Stores	442,281	2.5%	11,087	
4512	Book, Periodical, and Music Stores	195,732	2.5%	176	[b]
4521	Department Stores	1,532,456	2.1%	11,463	[b]
4529	Other General Merchandise Stores	1,269,995	2.1%	20,840	[b]
4531	Florists	98,373	2.1%	182	[b]
4532	Office Supplies, Stationery, and Gift Stores	337,789	2.1%	7,240	
4533	Used Merchandise Stores	133,533	2.4%	1,270	[b]
4539	Other Miscellaneous Store Retailers	270,150	2.4%	6,466	
4541	Electronic Shopping and Mail-Order Houses	263,979	2.4%	2,123	[b]
4542	Vending Machine Operators	51,645	2.4%	1,236	
4543	Direct Selling Establishments	206,114	2.4%	4,934	
4811	Scheduled Air Transportation	432,485	7.0%	30,069	
4812	Nonscheduled Air Transportation	42,289	7.0%	2,940	
4831	Deep Sea, Coastal, and Great Lakes Water Transportation	47,510	3.4%	1,376	[b]
4832	Inland Water Transportation	20,928	3.4%	629	[b]
4841	General Freight Trucking	1,049,957	3.5%	36,767	
4842	Specialized Freight Trucking	482,356	3.5%	16,891	
4851	Urban Transit Systems	49,414	2.3%	1,121	
4852	Interurban and Rural Bus Transportation	16,465	2.3%	374	
4853	Taxi and Limousine Service	69,226	2.3%	1,570	
4854	School and Employee Bus Transportation	194,765	2.3%	4,418	
4855	Charter Bus Industry	27,929	2.3%	634	
4859	Other Transit and Ground Passenger Transportation	60,919	2.3%	1,382	
4861	Pipeline Transportation of Crude Oil	7,529	8.8%	661	
4862	Pipeline Transportation of Natural Gas	22,248	8.8%	1,952	
4869	Other Pipeline Transportation	9,419	8.8%	826	
4871	Scenic and Sightseeing Transportation, Land	9,218	N/A	N/A	
4872	Scenic and Sightseeing Transportation, Water	15,280	N/A	N/A	
4879	Scenic and Sightseeing Transportation, Other	2,171	N/A	N/A	
4881	Support Activities for Air Transportation	158,320	4.2%	6,707	

Table V-4, contd.
Estimated Number of Employees Using Fall Protection Equipment

NAICS	NAICS DESCRIPTION	Total Employment	Employees Using Fall Protection [a]		
			Percent	Number [c]	
4882	Support Activities for Rail Transportation	28,090	4.2%	1,190	
4883	Support Activities for Water Transportation	91,795	14.2%	5,656	[b]
4884	Support Activities for Road Transportation	71,831	4.2%	3,043	
4885	Freight Transportation Arrangement	198,326	4.2%	1,940	[b]
4889	Other Support Activities for Transportation	31,227	4.2%	950	[b]
4921	Couriers	525,610	4.2%	12,977	[b]
4922	Local Messengers and Local Delivery	45,773	4.2%	149	[b]
4931	Warehousing and Storage	595,325	3.5%	18,718	[b]
5111	Newspaper, Periodical, Book, and Directory Publishers	699,906	1.8%	5,668	[b]
5112	Software Publishers	339,833	0.9%	2,276	[b]
5121	Motion Picture and Video Industries	308,750	N/A	N/A	
5122	Sound Recording Industries	22,481	9.8%	233	[b]
5151	Radio and Television Broadcasting	262,248	9.8%	2,872	[b]
5152	Cable and Other Subscription Programming	39,735	9.8%	3,883	
5161	Internet Publishing and Broadcasting	41,588	N/A	N/A	
5171	Wired Telecommunications Carriers	634,540	9.8%	62,004	
5172	Wireless Telecommunications Carriers (except Satellite)	241,407	9.8%	13,503	[b]
5173	Telecommunications Resellers	32,352	9.8%	N/A	
5174	Satellite Telecommunications	11,514	9.8%	1,125	
5175	Cable and Other Program Distribution	231,756	N/A	N/A	
5179	Other Telecommunications	10,197	N/A	N/A	
5181	Internet Service Providers and Web Search Portals	80,208	N/A	N/A	
5182	Data Processing, Hosting, and Related Services	385,110	N/A	N/A	
5191	Other Information Services	54,621	N/A	N/A	
5211	Monetary Authorities - Central Bank	20,019	N/A	N/A	
5221	Depository Credit Intermediation	2,155,349	N/A	N/A	
5222	Nondepository Credit Intermediation	765,267	N/A	N/A	
5223	Activities Related to Credit Intermediation	360,912	N/A	N/A	
5231	Securities and Commodity Contracts Intermediation and Brokerage	516,295	N/A	N/A	
5232	Securities and Commodity Exchanges	8,526	N/A	N/A	
5239	Other Financial Investment Activities	416,511	N/A	N/A	
5241	Insurance Carriers	1,438,696	0.9%	4,071	[b]
5242	Agencies, Brokerages, and Other Insurance Related Activities	939,126	0.9%	1,138	[b]
5259	Other Investment Pools and Funds	26,397	0.9%	230	
5311	Lessors of Real Estate	544,635	0.9%	4,746	
5312	Offices of Real Estate Agents and Brokers	377,256	0.9%	3,287	

Table V-4, contd.
Estimated Number of Employees Using Fall Protection Equipment

NAICS	NAICS DESCRIPTION	Total Employment	Employees Using Fall Protection [a]		
			Percent	Number [c]	
5313	Activities Related to Real Estate	631,478	0.9%	5,503	
5321	Automotive Equipment Rental and Leasing	184,468	0.9%	1,607	
5322	Consumer Goods Rental	253,627	0.9%	2,210	
5323	General Rental Centers	35,885	0.9%	313	
5324	Commercial and Industrial Machinery and Equipment Rental and Leasing	159,968	0.9%	1,394	
5331	Lessors of Nonfinancial Intangible Assets (except Copyrighted Works)	29,486	0.9%	257	
5411	Legal Services	1,219,383	0.9%	583	[b]
5412	Accounting, Tax Preparation, Bookkeeping, and Payroll Services	1,356,770	0.9%	7,473	[b]
5413	Architectural, Engineering, and Related Services	1,390,573	1.2%	17,161	
5414	Specialized Design Services	130,062	1.2%	1,605	
5415	Computer Systems Design and Related Services	1,215,296	1.2%	14,998	
5416	Management, Scientific, and Technical Consulting Services	1,039,301	1.2%	12,826	
5417	Scientific Research and Development Services	672,666	1.2%	8,301	
5418	Advertising and Related Services	433,800	1.2%	5,353	
5419	Other Professional, Scientific, and Technical Services	596,243	1.2%	4,103	[b]
5511	Management of Companies and Enterprises	2,915,644	0.9%	25,407	
5611	Office Administrative Services	497,872	0.9%	4,338	
5612	Facilities Support Services	164,637	0.9%	1,435	
5613	Employment Services	5,101,697	0.9%	44,456	
5614	Business Support Services	778,731	0.9%	4,546	[b]
5615	Travel Arrangement and Reservation Services	253,539	0.9%	1,729	[b]
5616	Investigation and Security Services	802,010	0.9%	6,989	
5617	Services to Buildings and Dwellings	1,707,203	0.9%	14,876	
5619	Other Support Services	352,603	0.9%	3,073	
5621	Waste Collection	176,912	0.9%	1,542	
5622	Waste Treatment and Disposal	56,343	0.9%	491	
5629	Remediation and Other Waste Management Services	112,079	0.9%	977	
6111	Elementary and Secondary Schools	802,963	N/A	N/A	
6112	Junior Colleges	85,892	N/A	N/A	
6113	Colleges, Universities, and Professional Schools	1,534,226	N/A	N/A	
6114	Business Schools and Computer and Management Training	67,537	N/A	N/A	
6115	Technical and Trade Schools	119,970	N/A	N/A	
6116	Other Schools and Instruction	292,730	N/A	N/A	
6117	Educational Support Services	76,196	N/A	N/A	
6211	Offices of Physicians	2,136,673	1.3%	3,829	[b]

Table V-4, contd.
Estimated Number of Employees Using Fall Protection Equipment

NAICS	NAICS DESCRIPTION	Total Employment	Employees Using Fall Protection [a]		
			Percent	Number	[c]
6212	Offices of Dentists	817,396	1.3%	411	[b]
6213	Offices of Other Health Practitioners	589,355	1.3%	628	[b]
6214	Outpatient Care Centers	692,430	1.3%	4,664	[b]
6215	Medical and Diagnostic Laboratories	228,067	1.3%	499	[b]
6216	Home Health Care Services	972,511	1.3%	1,202	[b]
6219	Other Ambulatory Health Care Services	246,853	1.3%	2,920	[b]
6221	General Medical and Surgical Hospitals	4,953,821	1.3%	62,825	
6222	Psychiatric and Substance Abuse Hospitals	216,745	1.3%	2,749	
6223	Specialty (except Psychiatric and Substance Abuse) Hospitals	199,974	1.3%	2,480	[b]
6231	Nursing Care Facilities	1,640,524	1.3%	20,805	
6232	Residential Mental Retardation, Mental Health and Substance Abuse Facilities	553,058	1.3%	5,229	[b]
6233	Community Care Facilities for the Elderly	640,128	1.3%	8,118	
6239	Other Residential Care Facilities	159,423	1.3%	2,022	
6241	Individual and Family Services	1,075,387	1.3%	5,345	[b]
6242	Community Food and Housing, and Emergency and Other Relief Services	159,534	1.3%	2,023	
6243	Vocational Rehabilitation Services	338,121	1.3%	3,752	[b]
6244	Child Day Care Services	831,361	1.3%	1,699	[b]
7111	Performing Arts Companies	133,511	N/A	N/A	
7112	Spectator Sports	120,281	N/A	N/A	
7113	Promoters of Performing Arts, Sports, and Similar Events	107,105	N/A	N/A	
7114	Agents and Managers for Artists, Athletes, Entertainers, and Other Public Figures	16,417	N/A	N/A	
7115	Independent Artists, Writers, and Performers	47,600	N/A	N/A	
7121	Museums, Historical Sites, and Similar Institutions	123,177	N/A	N/A	
7131	Amusement Parks and Arcades	136,390	N/A	N/A	
7132	Gambling Industries	195,977	N/A	N/A	
7139	Other Amusement and Recreation Industries	1,093,197	N/A	N/A	
7211	Traveler Accommodation	1,830,579	0.9%	16,638	
7212	RV (Recreational Vehicle) Parks and Recreational Camps	38,308	0.9%	348	
7213	Rooming and Boarding Houses	11,811	0.9%	107	
7221	Full-Service Restaurants	4,518,780	2.1%	3,362	[b]
7222	Limited-Service Eating Places	4,073,818	2.1%	4,363	[b]
7223	Special Food Services	546,347	2.1%	5,505	[b]
7224	Drinking Places (Alcoholic Beverages)	361,583	2.1%	709	[b]
8111	Automotive Repair and Maintenance	888,301	3.2%	28,165	

Table V-4, contd.
Estimated Number of Employees Using Fall Protection Equipment

NAICS	NAICS DESCRIPTION	Total Employment	Employees Using Fall Protection [a]		
			Percent	Number [c]	
8112	Electronic and Precision Equipment Repair and Maintenance	127,477	2.7%	3,486	
8113	Commercial and Industrial Machinery and Equipment (except Automotive and Electronic) Repair and Maintenance	193,442	2.7%	5,289	
8114	Personal and Household Goods Repair and Maintenance	98,001	2.7%	2,680	
8121	Personal Care Services	612,980	1.4%	366	[b]
8122	Death Care Services	136,806	1.4%	1,584	[b]
8123	Dry-cleaning and Laundry Services	374,377	1.4%	5,255	
8129	Other Personal Services	233,628	1.4%	3,116	[b]
8131	Religious Organizations	1,647,219	0.9%	14,354	
8132	Grantmaking and Giving Services	149,045	0.9%	688	[b]
8133	Social Advocacy Organizations	122,910	0.9%	1,071	
8134	Civic and Social Organizations	328,324	0.9%	2,861	
8139	Business, Professional, Labor, Political, and Similar Organizations	546,048	0.9%	4,758	
	Totals	112,008,852	1.5%	1,629,230	

[a] Source: OSHA PPE Cost Survey. Estimate based on the maximum percent of employees using either body harnesses or body belts. See Eastern Research Group, *PPE Cost Survey: Final Report*. (Exhibit 14, OSHA Docket S-042: Costs of Personal Protective Equipment). Prepared for OSHA under Task Order 3, Base Year, DOL Contract No. J-9-F-9-0010. June 23, 1999.

[b] Number using fall protection constrained to be less than or equal to the number of at-risk employees in construction, installation, maintenance, and repair occupations as shown in Table V-1.

[c] Due to rounding, the number shown may differ from the product of total employment and the percentage using fall protection.

N/A: Estimate not available for this industry.

Source: U.S. Dept. of Labor, OSHA, Directorate of Evaluation and Analysis, Office of Regulatory Analysis, based on U.S. Census Bureau, *Statistics of U.S. Businesses*, 2002, 2006; ERG, 2007; and ERG, 1999.

Table V-5
Wage Rates in Industries Affected by OSHA's Proposed Standard for Walking and Working Surfaces

NAICS	Industry	Production Worker Average Hourly Wage		Production Worker Supervisor Average Hourly Wage	
		Raw	With Fringe Markup	Raw	With Fringe Markup
1131	Timber Tract Operations	$16.51	$23.68[a]	$21.69	$31.12[a]
1132	Forest Nurseries and Gathering of Forest Products	$16.51	$23.68[a]	$21.69	$31.12[a]
1133	Logging	$16.51	$23.68	$21.69	$31.12
1141	Fishing	$16.51	$23.68[a]	$21.69	$31.12[a]
1142	Hunting and Trapping	$16.51	$23.68[a]	$21.69	$31.12[a]
1153	Support Activities for Forestry	$16.51	$23.68[a]	$21.69	$31.12[a]
2111	Oil and Gas Extraction	$22.79	$32.70	$33.22	$47.66
2211	Electric Power Generation, Transmission and Distribution	$28.04	$40.23	$36.27	$52.04
2212	Natural Gas Distribution	$27.38	$39.28	$38.63	$55.42
2213	Water, Sewage and Other Systems	$19.48	$27.95	$27.17	$38.98
3111	Animal Food Manufacturing	$14.86	$21.33	$23.87	$34.25
3112	Grain and Oilseed Milling	$17.27	$24.78	$27.27	$39.12
3113	Sugar and Confectionery Product Manufacturing	$14.50	$20.80	$24.04	$34.49
3114	Fruit and Vegetable Preserving and Specialty Food Manufacturing	$13.95	$20.02	$23.39	$33.56
3115	Dairy Product Manufacturing	$16.33	$23.43	$25.52	$36.61
3116	Animal Slaughtering and Processing	$12.12	$17.39	$22.56	$32.37
3117	Seafood Product Preparation and Packaging	$11.64	$16.70	$21.58	$30.96
3118	Bakeries and Tortilla Manufacturing	$13.74	$19.72	$22.60	$32.42
3119	Other Food Manufacturing	$14.73	$21.13	$24.64	$35.35
3121	Beverage Manufacturing	$16.75	$24.04	$25.59	$36.71
3122	Tobacco Manufacturing	$19.26	$27.63	$24.83	$35.62
3131	Fiber, Yarn, and Thread Mills	$12.46	$17.87	$21.52	$30.88
3132	Fabric Mills	$13.55	$19.44	$22.01	$31.58
3133	Textile and Fabric Finishing and Fabric Coating Mills	$12.97	$18.61	$22.69	$32.55
3141	Textile Furnishings Mills	$12.84	$18.42	$22.09	$31.69
3149	Other Textile Product Mills	$12.09	$17.34	$20.62	$29.58
3151	Apparel Knitting Mills	$11.36	$16.31	$20.88	$29.96
3152	Cut and Sew Apparel Manufacturing	$10.94	$15.70	$19.65	$28.19

Table V-5, contd.
Wage Rates in Industries Affected by OSHA's Proposed Standard for Walking and Working Surfaces

NAICS	Industry	Production Worker Average Hourly Wage		Production Worker Supervisor Average Hourly Wage	
		Raw	With Fringe Markup	Raw	With Fringe Markup
3159	Apparel Accessories and Other Apparel Manufacturing	$11.16	$16.02	$21.07	$30.23
3161	Leather and Hide Tanning and Finishing	$12.98	$18.62	$22.25	$31.92
3162	Footwear Manufacturing	$12.35	$17.72	$22.02	$31.59
3169	Other Leather and Allied Product Manufacturing	$11.87	$17.04	$21.18	$30.39
3211	Sawmills and Wood Preservation	$14.15	$20.30	$24.97	$35.82
3212	Veneer, Plywood, and Engineered Wood Product Manufacturing	$14.35	$20.59	$22.93	$32.90
3219	Other Wood Product Manufacturing	$13.48	$19.34	$22.37	$32.09
3221	Pulp, Paper, and Paperboard Mills	$21.20	$30.41	$31.97	$45.87
3222	Converted Paper Product Manufacturing	$16.39	$23.52	$27.05	$38.81
3231	Printing and Related Support Activities	$16.08	$23.07	$26.26	$37.68
3241	Petroleum and Coal Products Manufacturing	$24.06	$34.52	$33.22	$47.66
3251	Basic Chemical Manufacturing	$22.44	$32.19	$31.94	$45.82
3252	Resin, Synthetic Rubber, and Artificial Synthetic Fibers and Filaments Manufacturing	$20.38	$29.24	$29.38	$42.15
3253	Pesticide, Fertilizer, and Other Agricultural Chemical Manufacturing	$19.76	$28.34	$29.39	$42.17
3254	Pharmaceutical and Medicine Manufacturing	$18.05	$25.90	$30.07	$43.14
3255	Paint, Coating, and Adhesive Manufacturing	$17.17	$24.63	$27.52	$39.48
3256	Soap, Cleaning Compound, and Toilet Preparation Manufacturing	$15.58	$22.36	$26.33	$37.78
3259	Other Chemical Product and Preparation Manufacturing	$17.08	$24.51	$27.38	$39.28
3261	Plastics Product Manufacturing	$14.48	$20.78	$23.45	$33.64
3262	Rubber Product Manufacturing	$16.40	$23.53	$24.52	$35.18
3271	Clay Product and Refractory Manufacturing	$14.86	$21.32	$24.31	$34.88
3272	Glass and Glass Product Manufacturing	$16.15	$23.17	$26.03	$37.35
3273	Cement and Concrete Product Manufacturing	$16.57	$23.78	$24.50	$35.15
3274	Lime and Gypsum Product Manufacturing	$17.95	$25.75	$26.10	$37.45
3279	Other Nonmetallic Mineral Product Manufacturing	$15.63	$22.43	$25.13	$36.05
3311	Iron and Steel Mills and Ferroalloy Manufacturing	$20.88	$29.96	$29.16	$41.84
3312	Steel Product Manufacturing from Purchased Steel	$16.79	$24.09	$25.17	$36.11
3313	Alumina and Aluminum Production and Processing	$17.31	$24.84	$26.04	$37.36

Table V-5, contd.
Wage Rates in Industries Affected by OSHA's Proposed Standard for Walking and Working Surfaces

NAICS	Industry	Production Worker Average Hourly Wage		Production Worker Supervisor Average Hourly Wage	
		Raw	With Fringe Markup	Raw	With Fringe Markup
3314	Nonferrous Metal (except Aluminum) Production and Processing	$18.22	$26.15	$25.68	$36.84
3315	Foundries	$16.53	$23.71	$25.75	$36.94
3321	Forging and Stamping	$16.51	$23.69	$27.19	$39.01
3322	Cutlery and Handtool Manufacturing	$15.77	$22.62	$26.25	$37.66
3323	Architectural and Structural Metals Manufacturing	$15.74	$22.59	$24.65	$35.37
3324	Boiler, Tank, and Shipping Container Manufacturing	$16.78	$24.08	$26.75	$38.38
3325	Hardware Manufacturing	$15.02	$21.55	$25.38	$36.41
3326	Spring and Wire Product Manufacturing	$15.11	$21.68	$25.73	$36.92
3327	Machine Shops; Turned Product; and Screw, Nut, and Bolt Manufacturing	$17.14	$24.59	$27.43	$39.35
3328	Coating, Engraving, Heat Treating, and Allied Activities	$14.36	$20.61	$24.43	$35.05
3329	Other Fabricated Metal Product Manufacturing	$16.24	$23.30	$26.54	$38.08
3331	Agriculture, Construction, and Mining Machinery Manufacturing	$16.49	$23.66	$25.86	$37.10
3332	Industrial Machinery Manufacturing	$17.62	$25.28	$27.37	$39.27
3333	Commercial and Service Industry Machinery Manufacturing	$16.76	$24.05	$27.70	$39.74
3334	Ventilation, Heating, Air-Conditioning, and Commercial Refrigeration Equipment Manufacturing	$15.25	$21.88	$24.94	$35.78
3335	Metalworking Machinery Manufacturing	$18.17	$26.07	$29.39	$42.17
3336	Engine, Turbine, and Power Transmission Equipment Manufacturing	$17.88	$25.65	$28.67	$41.13
3339	Other General Purpose Machinery Manufacturing	$17.01	$24.41	$26.85	$38.52
3341	Computer and Peripheral Equipment Manufacturing	$16.51	$23.68	$25.19	$36.14
3342	Communications Equipment Manufacturing	$16.51	$23.69	$28.44	$40.80
3343	Audio and Video Equipment Manufacturing	$14.63	$20.99	$26.44	$37.93
3344	Semiconductor and Other Electronic Component Manufacturing	$15.64	$22.44	$27.30	$39.17
3345	Navigational, Measuring, Electromedical, and Control Instruments Manufacturing	$17.17	$24.64	$28.73	$41.22
3346	Manufacturing and Reproducing Magnetic and Optical Media	$15.54	$22.30	$24.83	$35.62

Table V-5, contd.
Wage Rates in Industries Affected by OSHA's Proposed Standard for Walking and Working Surfaces

NAICS	Industry	Production Worker Average Hourly Wage		Production Worker Supervisor Average Hourly Wage	
		Raw	With Fringe Markup	Raw	With Fringe Markup
3351	Electric Lighting Equipment Manufacturing	$14.96	$21.46	$24.60	$35.29
3352	Household Appliance Manufacturing	$15.41	$22.11	$23.44	$33.63
3353	Electrical Equipment Manufacturing	$15.92	$22.83	$25.74	$36.93
3359	Other Electrical Equipment and Component Manufacturing	$15.76	$22.61	$25.82	$37.04
3361	Motor Vehicle Manufacturing	$24.39	$34.99	$33.20	$47.63
3362	Motor Vehicle Body and Trailer Manufacturing	$15.92	$22.85	$24.03	$34.48
3363	Motor Vehicle Parts Manufacturing	$18.08	$25.93	$26.45	$37.95
3364	Aerospace Product and Parts Manufacturing	$21.49	$30.84	$30.86	$44.28
3365	Railroad Rolling Stock Manufacturing	$16.59	$23.80	$25.86	$37.10
3366	Ship and Boat Building	$17.27	$24.78	$26.14	$37.50
3369	Other Transportation Equipment Manufacturing	$17.87	$25.63	$25.96	$37.25
3371	Household and Institutional Furniture and Kitchen Cabinet Manufacturing	$14.16	$20.31	$22.65	$32.50
3372	Office Furniture (including Fixtures) Manufacturing	$15.25	$21.88	$24.45	$35.08
3379	Other Furniture Related Product Manufacturing	$13.10	$18.79	$22.91	$32.87
3391	Medical Equipment and Supplies Manufacturing	$15.93	$22.86	$26.98	$38.71
3399	Other Miscellaneous Manufacturing	$14.50	$20.81	$23.81	$34.16
4231	Motor Vehicle and Motor Vehicle Parts and Supplies Merchant Wholesalers	$14.51	$20.82	$23.86	$34.23
4232	Furniture and Home Furnishing Merchant Wholesalers	$14.08	$20.20	$23.94	$34.35
4233	Lumber and Other Construction Materials Merchant Wholesalers	$15.22	$21.84	$24.16	$34.66
4234	Professional and Commercial Equipment and Supplies Merchant Wholesalers	$17.43	$25.01	$25.47	$36.54
4235	Metal and Mineral (except Petroleum) Merchant Wholesalers	$15.90	$22.81	$25.95	$37.23
4236	Electrical and Electronic Goods Merchant Wholesalers	$16.56	$23.76	$26.78	$38.42
4237	Hardware, and Plumbing and Heating Equipment and Supplies Merchant Wholesalers	$16.19	$23.23	$24.91	$35.74
4238	Machinery, Equipment, and Supplies Merchant Wholesalers	$17.87	$25.64	$26.65	$38.24
4239	Miscellaneous Durable Goods Merchant Wholesalers	$13.89	$19.93	$24.46	$35.09

Table V-5, contd.
Wage Rates in Industries Affected by OSHA's Proposed Standard for Walking and Working Surfaces

NAICS	Industry	Production Worker Average Hourly Wage		Production Worker Supervisor Average Hourly Wage	
		Raw	With Fringe Markup	Raw	With Fringe Markup
4241	Paper and Paper Product Merchant Wholesalers	$15.43	$22.13	$26.84	$38.51
4242	Drugs and Druggists' Sundries Merchant Wholesalers	$13.71	$19.67	$25.39	$36.43
4243	Apparel, Piece Goods, and Notions Merchant Wholesalers	$12.62	$18.10	$25.64	$36.79
4244	Grocery and Related Product Wholesalers	$15.43	$22.14	$24.12	$34.61
4245	Farm Product Raw Material Merchant Wholesalers	$12.60	$18.08	$23.56	$33.80
4246	Chemical and Allied Products Merchant Wholesalers	$16.58	$23.79	$25.63	$36.77
4247	Petroleum and Petroleum Products Merchant Wholesalers	$17.73	$25.44	$31.23	$44.81
4248	Beer, Wine, and Distilled Alcoholic Beverage Merchant Wholesalers	$16.73	$24.01	$25.26	$36.24
4249	Miscellaneous Nondurable Goods Merchant Wholesalers	$12.95	$18.59	$22.28	$31.97
4251	Wholesale Electronic Markets and Agents and Brokers	$15.27	$21.91	$25.52	$36.61
4411	Automobile Dealers	$17.48	$25.08	$31.11	$44.63
4412	Other Motor Vehicle Dealers	$15.66	$22.47	$26.21	$37.60
4413	Automotive Parts, Accessories, and Tire Stores	$13.01	$18.67	$25.62	$36.76
4421	Furniture Stores	$12.32	$17.68	$23.96	$34.38
4422	Home Furnishings Stores	$15.42	$22.12	$20.98	$30.10
4431	Electronics and Appliance Stores	$15.57	$22.34	$23.59	$33.85
4441	Building Material and Supplies Dealers	$13.76	$19.74	$23.31	$33.44
4442	Lawn and Garden Equipment and Supplies Stores	$12.52	$17.96	$23.51	$33.73
4451	Grocery Stores	$11.12	$15.95	$20.44	$29.33
4452	Specialty Food Stores	$12.79	$18.35	$19.75	$28.34
4453	Beer, Wine, and Liquor Stores	$12.72	$18.24	$19.64	$28.17[a]
4461	Health and Personal Care Stores	$12.24	$17.56	$21.97	$31.52
4471	Gasoline Stations	$12.75	$18.30	$15.59	$22.37
4481	Clothing Stores	$11.61	$16.66	$23.15	$33.21
4482	Shoe Stores	$11.63	$16.69	$18.33	$28.27
4483	Jewelry, Luggage, and Leather Goods Stores	$17.34	$24.87	$23.21	$33.30
4511	Sporting Goods, Hobby, and Musical Instrument Stores	$12.61	$18.09	$20.43	$29.31
4512	Book, Periodical, and Music Stores	$12.67	$18.18	$20.52	$29.45[a]
4521	Department Stores	$10.60	$15.21	$17.92	$25.71
4529	Other General Merchandise Stores	$11.56	$16.59	$19.79	$28.39
4531	Florists	$9.80	$14.06	$16.77	$24.06[a]

Table V-5, contd.
Wage Rates in Industries Affected by OSHA's Proposed Standard for Walking and Working Surfaces

NAICS	Industry	Production Worker Average Hourly Wage		Production Worker Supervisor Average Hourly Wage	
		Raw	With Fringe Markup	Raw	With Fringe Markup
4532	Office Supplies, Stationery, and Gift Stores	$14.88	$21.35	$18.00	$25.82
4533	Used Merchandise Stores	$10.73	$15.39	$18.43	$26.44
4539	Other Miscellaneous Store Retailers	$13.49	$19.36	$24.27	$34.82
4541	Electronic Shopping and Mail-Order Houses	$12.70	$18.22	$23.15	$33.21
4542	Vending Machine Operators	$14.15	$20.30	$23.80	$34.15
4543	Direct Selling Establishments	$17.20	$24.68	$21.35	$30.63
4811	Scheduled Air Transportation	$39.62	$56.84	$56.15	$80.56[a]
4812	Nonscheduled Air Transportation	$29.95	$42.97	$42.45	$60.90[a]
4831	Deep Sea, Coastal, and Great Lakes Water Transportation	$27.16	$38.96	$38.49	$55.23[a]
4832	Inland Water Transportation	$24.48	$35.12	$34.70	$49.78[a]
4841	General Freight Trucking	$18.96	$27.21	$26.88	$38.57
4842	Specialized Freight Trucking	$17.27	$24.78	$25.47	$36.54
4851	Urban Transit Systems	$15.71	$22.53	$22.26	$31.94[a]
4852	Interurban and Rural Bus Transportation	$17.45	$25.03	$24.73	$35.48[a]
4853	Taxi and Limousine Service	$12.92	$18.54	$18.31	$26.27[a]
4854	School and Employee Bus Transportation	$13.84	$19.85	$19.61	$28.14[a]
4855	Charter Bus Industry	$14.11	$20.25	$20.01	$28.70[a]
4859	Other Transit and Ground Passenger Transportation	$12.56	$18.01	$17.80	$25.53[a]
4861	Pipeline Transportation of Crude Oil	$25.59	$36.71	$30.96	$44.42
4862	Pipeline Transportation of Natural Gas	$24.79	$35.56	$30.12	$43.21
4869	Other Pipeline Transportation	$24.46	$35.09	$31.10	$44.62
4871	Scenic and Sightseeing Transportation, Land	$14.25	$20.44	$20.19	$28.97[a]
4872	Scenic and Sightseeing Transportation, Water	$17.65	$25.33	$25.02	$35.90[a]
4879	Scenic and Sightseeing Transportation, Other	$26.76	$38.39	$37.93	$54.42[a]
4881	Support Activities for Air Transportation	$19.03	$27.30	$26.50	$38.02
4882	Support Activities for Rail Transportation	$16.49	$23.66	$22.95	$32.93
4883	Support Activities for Water Transportation	$24.32	$34.89	$26.45	$37.95
4884	Support Activities for Road Transportation	$15.25	$21.87	$23.21	$33.30
4885	Freight Transportation Arrangement	$16.24	$23.29	$21.40	$30.70
4889	Other Support Activities for Transportation	$13.16	$18.88	$25.76	$36.96
4921	Couriers	$18.35	$26.32	$29.81	$42.77[a]
4922	Local Messengers and Local Delivery	$14.83	$21.28	$23.41	$33.59[a]

Table V-5, contd.
Wage Rates in Industries Affected by OSHA's Proposed Standard for Walking and Working Surfaces

NAICS	Industry	Production Worker Average Hourly Wage		Production Worker Supervisor Average Hourly Wage	
		Raw	With Fringe Markup	Raw	With Fringe Markup
4931	Warehousing and Storage	$15.24	$21.86	$24.76	$35.52
5111	Newspaper, Periodical, Book, and Directory Publishers	$15.69	$22.51	$26.86	$38.54
5112	Software Publishers	$16.68	$23.93	$29.09	$41.74
5121	Motion Picture and Video Industries	$17.85	$25.61	$27.68	$39.71
5122	Sound Recording Industries	$17.86	$25.62	$31.14	$44.68[a]
5151	Radio and Television Broadcasting	$19.69	$28.25	$34.33	$49.26[a]
5152	Cable and Other Subscription Programming	$22.59	$32.41	$39.39	$56.52[a]
5161	Internet Publishing and Broadcasting	$22.59	$32.41[a]	$39.39	$54.91[a]
5171	Wired Telecommunications Carriers	$25.57	$36.69	$44.60	$63.98[a]
5172	Wireless Telecommunications Carriers (except Satellite)	$25.17	$36.11	$43.88	$62.96[a]
5173	Telecommunications Resellers	$25.17	$36.11[a]	$43.88	$62.96[a]
5174	Satellite Telecommunications	$26.68	$38.28	$46.53	$64.85[a]
5175	Cable and Other Program Distribution	$25.17	$36.11[a]	$43.88	$62.96[a]
5179	Other Telecommunications	$27.22	$39.05	$47.46	$66.15[a]
5181	Internet Service Providers and Web Search Portals	$17.93	$25.72	$25.72	$36.90
5182	Data Processing, Hosting, and Related Services	$16.27	$23.35	$26.96	$38.68
5191	Other Information Services	$21.11	$30.29	$36.29	$52.07[a]
5211	Monetary Authorities - Central Bank	$13.18	$18.92	$22.67	$32.52[a]
5221	Depository Credit Intermediation	$15.80	$22.66	$27.16	$38.97
5222	Nondepository Credit Intermediation	$11.56	$16.58	$19.87	$28.51[a]
5223	Activities Related to Credit Intermediation	$16.93	$24.29	$29.10	$39.40[a]
5231	Securities and Commodity Contracts Intermediation and Brokerage	$21.31	$30.58	$36.64	$49.60[a]
5232	Securities and Commodity Exchanges	$18.81	$26.98	$32.33	$43.77[a]
5239	Other Financial Investment Activities	$18.13	$26.01	$26.77	$38.41
5241	Insurance Carriers	$13.17	$18.89	$19.44	$27.90
5242	Agencies, Brokerages, and Other Insurance Related Activities	$9.21	$13.21	$13.59	$21.42
5259	Other Investment Pools and Funds	$16.52	$23.71	$24.40	$35.01
5311	Lessors of Real Estate	$14.52	$20.84	$23.63	$33.90
5312	Offices of Real Estate Agents and Brokers	$14.76	$21.18	$31.16	$44.70[a]
5313	Activities Related to Real Estate	$14.70	$21.09	$31.03	$44.52

Table V-5, contd.
Wage Rates in Industries Affected by OSHA's Proposed Standard for Walking and Working Surfaces

NAICS	Industry	Production Worker Average Hourly Wage		Production Worker Supervisor Average Hourly Wage	
		Raw	With Fringe Markup	Raw	With Fringe Markup
5321	Automotive Equipment Rental and Leasing	$13.55	$19.44	$21.56	$30.93[a]
5322	Consumer Goods Rental	$12.88	$18.48	$22.35	$32.07
5323	General Rental Centers	$14.12	$20.26	$22.47	$32.24
5324	Commercial and Industrial Machinery and Equipment Rental and Leasing	$18.22	$26.13	$25.41	$36.46
5331	Lessors of Nonfinancial Intangible Assets (except Copyrighted Works)	$12.65	$18.15	$20.13	$28.88[a]
5411	Legal Services	$12.19	$17.49	$21.13	$30.31[a]
5412	Accounting, Tax Preparation, Bookkeeping, and Payroll Services	$15.66	$22.47	$27.15	$38.95
5413	Architectural, Engineering, and Related Services	$19.64	$28.18	$30.52	$43.79
5414	Specialized Design Services	$14.85	$21.30	$25.44	$36.50
5415	Computer Systems Design and Related Services	$21.22	$30.45	$28.53	$40.93
5416	Management, Scientific, and Technical Consulting Services	$18.51	$26.55	$26.93	$38.64
5417	Scientific Research and Development Services	$21.65	$31.05	$33.65	$48.28
5418	Advertising and Related Services	$14.91	$21.39	$25.33	$36.34
5419	Other Professional, Scientific, and Technical Services	$15.37	$22.06	$24.60	$35.29
5511	Management of Companies and Enterprises	$18.15	$26.05	$27.21	$39.04
5611	Office Administrative Services	$15.23	$21.85	$25.38	$36.41
5612	Facilities Support Services	$17.04	$24.45	$28.45	$40.82
5613	Employment Services	$11.66	$16.72	$22.86	$32.80
5614	Business Support Services	$15.58	$22.36	$25.63	$36.77
5615	Travel Arrangement and Reservation Services	$14.22	$20.41	$23.39	$33.56[a]
5616	Investigation and Security Services	$17.58	$25.22	$25.31	$36.31
5617	Services to Buildings and Dwellings	$11.70	$16.79	$20.72	$29.73
5619	Other Support Services	$13.97	$20.05	$23.35	$33.50
5621	Waste Collection	$16.50	$23.68	$28.46	$40.83
5622	Waste Treatment and Disposal	$18.78	$26.95	$30.05	$43.11
5629	Remediation and Other Waste Management Services	$18.53	$26.59	$24.94	$35.78
6111	Elementary and Secondary Schools	$14.21	$20.39	$20.96	$30.07
6112	Junior Colleges	$15.51	$22.26	$26.16	$37.53
6113	Colleges, Universities, and Professional Schools	$15.97	$22.91	$25.35	$36.37

Table V-5, contd.
Wage Rates in Industries Affected by OSHA's Proposed Standard for Walking and Working Surfaces

NAICS	Industry	Production Worker Average Hourly Wage		Production Worker Supervisor Average Hourly Wage	
		Raw	With Fringe Markup	Raw	With Fringe Markup
6114	Business Schools and Computer and Management Training	$15.63	$22.42	$24.81	$35.59[a]
6115	Technical and Trade Schools	$19.63	$28.16	$31.15	$44.70[a]
6116	Other Schools and Instruction	$13.93	$19.98	$22.10	$31.71[a]
6117	Educational Support Services	$12.13	$17.40	$25.60	$36.73
6211	Offices of Physicians	$13.70	$19.65	$26.27	$37.69
6212	Offices of Dentists	$14.22	$20.40	$25.17	$36.14
6213	Offices of Other Health Practitioners	$12.24	$17.56	$24.47	$35.11
6214	Outpatient Care Centers	$13.79	$19.79	$27.57	$39.56[a]
6215	Medical and Diagnostic Laboratories	$16.38	$23.51	$28.17	$40.42
6216	Home Health Care Services	$12.56	$18.01	$25.10	$36.01[a]
6219	Other Ambulatory Health Care Services	$15.26	$21.89	$26.27	$37.69
6221	General Medical and Surgical Hospitals	$14.00	$20.08	$25.32	$36.33
6222	Psychiatric and Substance Abuse Hospitals	$14.84	$21.28	$27.21	$39.04
6223	Specialty (except Psychiatric and Substance Abuse) Hospitals	$14.90	$21.37	$30.62	$43.93
6231	Nursing Care Facilities	$11.05	$15.86	$19.59	$28.11
6232	Residential Mental Retardation, Mental Health and Substance Abuse Facilities	$11.95	$17.14	$20.78	$29.81
6233	Community Care Facilities for the Elderly	$11.43	$16.40	$18.73	$26.87
6239	Other Residential Care Facilities	$12.77	$18.32	$20.93	$30.02[a]
6241	Individual and Family Services	$10.82	$15.52	$16.86	$24.19
6242	Community Food and Housing, and Emergency and Other Relief Services	$12.50	$17.93	$19.48	$27.95[a]
6243	Vocational Rehabilitation Services	$10.72	$15.38	$17.19	$24.66
6244	Child Day Care Services	$10.64	$15.26	$16.58	$23.79[a]
7111	Performing Arts Companies	$19.27	$27.65	$33.74	$48.40[a]
7112	Spectator Sports	$16.84	$24.16	$29.48	$42.30
7113	Promoters of Performing Arts, Sports, and Similar Events	$14.12	$20.25	$24.71	$35.46[a]
7114	Agents and Managers for Artists, Athletes, Entertainers, and Other Public Figures	$16.64	$23.87	$29.12	$42.24[a]
7115	Independent Artists, Writers, and Performers	$15.43	$22.13	$27.00	$38.74[a]
7121	Museums, Historical Sites, and Similar Institutions	$14.44	$20.72	$25.27	$36.26[a]

Table V-5, contd.
Wage Rates in Industries Affected by OSHA's Proposed Standard for Walking and Working Surfaces

NAICS	Industry	Production Worker Average Hourly Wage		Production Worker Supervisor Average Hourly Wage	
		Raw	With Fringe Markup	Raw	With Fringe Markup
7131	Amusement Parks and Arcades	$14.78	$21.21	$25.88	$37.13[a]
7132	Gambling Industries	$12.71	$18.24	$22.26	$31.93[a]
7139	Other Amusement and Recreation Industries	$12.54	$17.98	$23.85	$34.22
7211	Traveler Accommodation	$10.76	$15.43	$19.88	$28.52
7212	RV (Recreational Vehicle) Parks and Recreational Camps	$11.16	$16.01	$20.62	$29.58[a]
7213	Rooming and Boarding Houses	$10.56	$15.16	$19.53	$28.02[a]
7221	Full-Service Restaurants	$10.02	$14.38	$24.58	$35.27
7222	Limited-Service Eating Places	$9.09	$13.04	$13.85	$19.87
7223	Special Food Services	$12.19	$17.49	$23.46	$33.66
7224	Drinking Places (Alcoholic Beverages)	$10.06	$14.44	$19.37	$27.79[a]
8111	Automotive Repair and Maintenance	$15.33	$21.99	$24.80	$35.58
8112	Electronic and Precision Equipment Repair and Maintenance	$19.06	$27.34	$26.52	$38.05
8113	Commercial and Industrial Machinery and Equipment (except Automotive and Electronic) Repair and Maintenance	$18.59	$26.67	$26.26	$37.68
8114	Personal and Household Goods Repair and Maintenance	$15.60	$22.38	$23.50	$33.72
8121	Personal Care Services	$9.70	$13.92	$16.66	$23.91[a]
8122	Death Care Services	$12.30	$17.65	$21.12	$30.30[a]
8123	Dry-cleaning and Laundry Services	$10.96	$15.73	$18.82	$27.00
8129	Other Personal Services	$10.90	$15.64	$22.54	$32.34
8131	Religious Organizations	$12.35	$17.72	$24.11	$34.59[a]
8132	Grantmaking and Giving Services	$13.00	$18.65	$25.36	$36.39[a]
8133	Social Advocacy Organizations	$12.62	$18.11	$24.63	$35.34[a]
8134	Civic and Social Organizations	$11.26	$16.16	$21.98	$31.54
8139	Business, Professional, Labor, Political, and Similar Organizations	$13.85	$19.87	$27.03	$38.78

[a] Value imputed from 3-digit NAICS averages.
Source: U.S. Dept. of Labor, OSHA, Directorate of Evaluation and Analysis, Office of Regulatory Analysis, based on ERG, 2007; BLS *Occupational Employment Statistics* Survey, 2008, and BLS, *Employer Costs for Employee Compensation – June 2008*.

BILLING CODE 4510–29–C

D. Benefits, Net Benefits, Cost Effectiveness, and Sensitivity Analysis

This subsection reviews the populations in general industry that are at risk of occupational injury or death due to hazards addressed by this proposal, and assesses the potential benefits associated with the proposed updates to subparts D and I. OSHA believes that compliance with the proposed rule will yield substantial benefits in terms of lives saved, injuries avoided, and reduced accident-related costs.

As described in section C above, the employees affected by the proposed standard work largely in construction, installation, maintenance, and repair. According to the Bureau of Labor Statistics' 2008 Occupational Employment Statistics survey, there are approximately 112.0 million employees in industries within the scope of this proposal; 5.3 million employees engaged in construction, installation, maintenance, and repair operations in general industry that would be directly affected by this proposal; and 1.6 million employees in general industry using personal fall protection equipment. As explained earlier, to account for all of these employees, OSHA identified production employees classified in BLS occupational codes defining construction, installation, maintenance, and repair in the following industry sectors: Agriculture; oil and gas extraction; utilities; manufacturing; wholesale trade; retail trade; transportation; information; finance and insurance; real estate; professional, scientific, and technical services; management of companies; enterprise administration; education; health care; arts, entertainment, and recreation; and other services. This approach assumes that employees in construction occupations, but employed by general industry rather than construction employers, are routinely engaged in what OSHA labels maintenance (*i.e.,* a general industry activity) rather than construction activities. The methodology for deriving these estimates is discussed in the ERG report (ERG, 2007, Ex. 6).

This subsection first examines the available data on the number of baseline injuries and fatalities among affected employees; then assesses the extent to which the standard can prevent those injuries and fatalities; and finally estimates some of the economic benefits associated with the prevented injuries and fatalities. OSHA's proposed standards for subpart D, Walking-Working Surfaces, and subpart I, Personal Protective Equipment (Personal Fall Protection Systems), would produce benefits to the extent compliance prevents injuries and fatalities that would not be prevented by the existing OSHA standards.

Profile of Fall Accidents

Fall Fatalities

OSHA examined fall fatalities using two databases. As a baseline for determining the average number of fall fatalities per year, OSHA examined data from the BLS Census of Fatal Occupational Injuries (CFOI) for 2006 and 2007. To provide a more detailed breakdown of the kinds of falls included in this total, OSHA examined CFOI data for the longer period of 1992 to 2002.

As shown in Table V–6, the BLS Census of Fatal Occupational Injuries (CFOI) reported 285 and 267 fatal falls to lower levels for 2006 and 2007, respectively, in industries covered by the proposed standard. Distinguished from the larger category of all falls—a set of accidents that includes falls on the same level and jumps to a lower level—the narrower category of falls to a lower level are the types of falls directly addressed by OSHA's proposed standard. For purposes of estimating the overall rate of fall fatalities for this benefits analysis, OSHA took the average of these two years—276 fall fatalities per year. Over the two-year period, industries in the professional, scientific, technical, administrative, and support services (NAICS 541 and 561) accounted for 30 percent of the fatal falls, while the manufacturing (NAICS 31–33) and transportation (NAICS 48) sectors accounted for 10.9 and 6.0 percent of the fall fatalities, respectively. BLS reported the highest number of fatal falls in NAICS 561, Administrative and Support Services. Although not shown in the table, a large majority of these fatalities—82 percent for the two-year period 2006–2007—occurred in the industry concerned with services to buildings and dwellings (NAICS 5617).

TABLE V–6—FATALITIES FROM FALLS TO A LOWER LEVEL—GENERAL INDUSTRY, 2006 & 2007

NAICS	NAICS description	Number of fatalities	
		2006	2007
113	Forestry and Logging	3	4
114	Fishing, Hunting and Trapping	0	0
115	Support Activities for Agriculture and Forestry	0	0
211	Oil and Gas Extraction	0	0
213111	Oil and Gas Well Drilling	5	4
221	Utilities	0	0
311	Food Manufacturing	5	4
312	Beverage and Tobacco Product Manufacturing	0	0
313	Textile Mills	0	0
314	Textile Product Mills	0	0
315	Apparel Manufacturing	0	0
316	Leather and Allied Product Manufacturing	0	0
321	Wood Product Manufacturing	7	0
322	Paper Manufacturing	0	0
323	Printing and Related Support Activities	0	0
324	Petroleum and Coal Products Manufacturing	0	0
325	Chemical Manufacturing	3	3
326	Plastics and Rubber Products Manufacturing	3	0
327	Nonmetallic Mineral Product Manufacturing	3	0
331	Primary Metal Manufacturing	0	0
332	Fabricated Metal Product Manufacturing	10	7
333	Machinery Manufacturing	0	0
334	Computer and Electronic Product Manufacturing	0	0
335	Electrical Equipment, Appliance, and Component Manufacturing	0	0

TABLE V–6—FATALITIES FROM FALLS TO A LOWER LEVEL—GENERAL INDUSTRY, 2006 & 2007—Continued

NAICS	NAICS description	Number of fatalities	
		2006	2007
336	Transportation Equipment Manufacturing	7	4
337	Furniture and Related Product Manufacturing	0	0
339	Miscellaneous Manufacturing	0	4
423	Merchant Wholesalers, Durable Goods	4	7
424	Merchant Wholesalers, Nondurable Goods	12	6
425	Wholesale Electronic Markets and Agents and Brokers	0	0
441	Motor Vehicle and Parts Dealers	4	0
442	Furniture and Home Furnishings Stores	0	0
443	Electronics and Appliance Stores	0	0
444	Building Material and Garden Equipment and Supplies Dealers	6	4
445	Food and Beverage Stores	5	0
446	Health and Personal Care Stores	0	0
447	Gasoline Stations	0	0
448	Clothing and Clothing Accessories Stores	0	0
451	Sporting Goods, Hobby, Book, and Music Stores	0	0
452	General Merchandise Stores	0	0
453	Miscellaneous Store Retailers	0	0
454	Nonstore Retailers	0	0
481	Air Transportation	0	0
482	Railroads	0	0
483	Water Transportation	0	0
484	Truck Transportation	11	18
485	Transit and Ground Passenger Transportation	0	0
486	Pipeline Transportation	0	0
487	Scenic and Sightseeing Transportation	0	0
488	Support Activities for Transportation	0	4
492	Couriers and Messengers	0	0
493	Warehousing and Storage	4	5
511	Publishing Industries (except Internet)	0	0
512	Motion Picture and Sound Recording Industries	0	0
515	Broadcasting (except Internet)	0	0
516	Internet Publishing and Broadcasting	0	0
517	Telecommunications	6	3
518	Internet Service Providers, Web Search Portals, and Data Processing Services	0	0
519	Other Information Services	0	0
521	Monetary Authorities—Central Bank	0	0
522	Credit Intermediation and Related Activities	0	0
523	Securities, Commodity Contracts, and Other Financial Investments and Related Activities	0	0
524	Insurance Carriers and Related Activities	3	0
525	Funds, Trusts, and Other Financial Vehicles	0	0
531	Real Estate	10	9
532	Rental and Leasing Services	0	0
533	Lessors of Nonfinancial Intangible Assets (except Copyrighted Works)	0	0
541	Professional, Scientific, and Technical Services	7	10
551	Management of Companies and Enterprises	0	0
561	Administrative and Support Services	66	80
562	Waste Management and Remediation Services	5	0
611	Educational Services	0	0
621	Ambulatory Health Care Services	0	0
622	Hospitals	0	0
623	Nursing and Residential Care Facilities	4	0
624	Social Assistance	0	3
711	Performing Arts, Spectator Sports, and Related Industries	6	3
712	Museums, Historical Sites, and Similar Institutions	0	0
713	Amusement, Gambling, and Recreation Industries	0	7
721	Accommodation	8	5
722	Food Services and Drinking Places	4	7
811	Repair and Maintenance	6	4
812	Personal and Laundry Services	0	0
813	Religious, Grantmaking, Civic, Professional, and Similar Organizations	11	7
	Industry not specified [a]	57	55
Total		285	267

[a] Includes falls from ship, boat, not elsewhere classified. Source: U.S. Dept. of Labor, OSHA, Directorate of Evaluation and Analysis, Office of Regulatory Analysis, based on Bureau of Labor Statistics, *Census of Fatal Occupational Injuries,* 2006 and 2007.

To assess the benefits of this rule, it is necessary to know not only the total annual number of fall fatalities, but also the numbers of various types of fall fatalities. Quantifying the various types of fatal falls is necessary because the

proposal is expected to prevent fall fatalities to different degrees for different kinds of falls. Table V–7 shows, for the eleven-year period 1992 to 2002, the breakdown of fall fatalities by type of fall based on CFOI data. As shown, falls to a lower level (distinguished from falls on the same level) accounted for about 78 percent of total fall fatalities. Overall, on average, falls to a lower level accounted for 217 of the 279 fatal falls per year that occurred in general industry establishments. On a sector-by-sector basis, falls to a lower level as a percentage of all fatal falls ranged from 59 percent for the retail trade sector to 95 percent for the agricultural services sector. As the table also shows, fatal falls from ladders averaged 41 per year over the eleven-year period, while fatal falls from scaffolds averaged 15 per year. The category of "other" falls to a lower level includes falls from floors, docks, or ground level; falls from nonmoving vehicles; and falls from building girders and other structural steel.

TABLE V–7—FATAL FALLS BY TYPE OF FALL AND INDUSTRY SECTOR, 1992 TO 2002

Industry sector	All falls	Falls to a lower level				
		Total	From a ladder	From a roof	From a scaffold	Other
Total Fatal Falls, 1992 to 2002						
Agricultural services	366	348	47	11	3	287
Manufacturing	665	535	80	64	75	316
Transportation, communications, electric, gas, and sanitary services	438	365	55	9	8	293
Wholesale trade	196	163	22	10	0	131
Retail trade	318	188	73	9	0	106
Finance, insurance, and real estate	138	111	37	14	0	60
Services	944	672	141	84	77	370
Total	3,065	2,382	455	201	163	1,563
Average Fatal Falls per Year						
Agricultural services	33	32	4	1	0	26
Manufacturing	60	49	7	6	7	29
Transportation, communications, electric, gas, and sanitary services	40	33	5	1	1	27
Wholesale trade	18	15	2	1	0	12
Retail trade	29	17	7	1	0	10
Finance, insurance, and real estate	13	10	3	1	0	5
Services	86	61	13	8	7	34
Total	279	217	41	18	15	142

Note: Titles for industry sectors are taken from the SIC system of industry categorization. Source: ERG, 2007, based on BLS, *Census of Fatal Occupational Injuries,* 1992–2002.

Fall Injuries

Table V–8, based on BLS's *2007 Survey of Occupational Injuries and Illnesses,* shows the total number of lost workday injuries due to falls in general industry, by type of fall. This table will form the basis for OSHA's estimate of the number of lost-workday injuries prevented by the proposal.

Table V–9, based on BLS's *2007 Survey of Occupational Injuries and Illnesses,* provides additional details about the lost-workday injury rates for the two major categories of falls: falls to a lower level and falls to the same level. Excluding industry groups where the data may have been incomplete, the combined fall injury rate ranges from a low of 2.5 cases per 10,000 workers in NAICS 523 (Securities, Commodity Contracts, and Other Financial Investments and Related Activities) to a high of 73.5 per 10,000 employees in NAICS 481 (Air Transportation). Of the 78 affected industries with reported fall injury data, 25 had fall injury rates in excess of 30 cases per 10,000 employees, while 23 had fall injury rates between 20 and 30 cases per 10,000 employees.

Table V–10, also based on BLS's *2007 Survey of Occupational Injuries and Illnesses,* shows lost-workday fall-related injury rates by specific type of fall, disaggregated by the major industry sectors covered by the proposed standard. These statistics show that, unlike fall fatalities, falls to a lower level represent a relatively small share of injurious, non-fatal falls. For example, in manufacturing, falls to the same level accounted for 68 percent of all falls resulting in lost-workday injuries, while falls to a lower level accounted for only 27 percent. The majority of accidents in the fall-to-same-level category are characterized as a fall to a floor, walkway, or other surface.

TABLE V–8—ESTIMATED ANNUAL NUMBER OF LOST-WORKDAY FALLS IN WORKPLACES AFFECTED BY THE PROPOSED STANDARD

Falls by type	Distribution of falls resulting in lost workdays
All Falls	215,807
Fall to lower level	55,706
Fall down stairs or steps	16,916
Fall from floor, dock, or ground level	3,878
Fall from ladder	12,472
Fall from piled or stacked material	283
Fall from roof	959
Fall from scaffold, staging	434
Fall from building girders or other structural steel	131
Fall from nonmoving vehicle	11,018
Fall to lower level, n.e.c. (a)	8,433
Fall to lower level, unspecified	1,192
Fall on same level	152,788
Fall from ship, boat, n.e.c.	30
Other falls	7,281
Total	215,807

(a) n.e.c.—Not Elsewhere Classified

Source: U.S. Dept. of Labor, OSHA, Directorate of Evaluation and Analysis, Office of Regulatory Analysis, 2009, based on Bureau of Labor Statistics, *Survey of Occupational Injuries and Illnesses, 2007.*

BILLING CODE 4510–29–P

Table V-9
Injuries From Falls - General Industry, 2007
(Lost Work Day Cases per 10,000 Workers)

NAICS	NAICS Description	Falls - To Lower Level	Falls - On Same Level	All Falls	Industry Rank	Estimated Number of Falls
113	Forestry and Logging	12.7	42.5	55.2	6	366
114	Fishing, Hunting and Trapping	0	0	0	81	0
115	Support Activities for Agriculture and Forestry	18.7	13	31.7	21	43
211	Oil and Gas Extraction	5.7	10.4	16.1	55	149
213111	Oil and Gas Well Drilling	8.2	15.8	24	38	205
221	Utilities	8.9	14.7	23.6	40	1,450
311	Food Manufacturing	8	21.5	29.5	24	4,303
312	Beverage and Tobacco Product Manufacturing	8.3	27.3	35.6	14	552
313	Textile Mills	2	9.4	11.4	68	214
314	Textile Product Mills	2	8.1	10.1	72	157
315	Apparel Manufacturing	1.2	6.4	7.6	77	164
316	Leather and Allied Product Manufacturing	0	14.9	14.9	59	58
321	Wood Product Manufacturing	8.7	15	23.7	39	1,366
322	Paper Manufacturing	4.1	9.7	13.8	62	609
323	Printing and Related Support Activities	2.3	11.2	13.5	64	865
324	Petroleum and Coal Products Manufacturing	5.8	7.7	13.5	65	139
325	Chemical Manufacturing	4.6	10.5	15.1	57	1,216
326	Plastics and Rubber Products Manufacturing	6	21.7	27.7	29	2,495
327	Nonmetallic Mineral Product Manufacturing	11.1	17.7	28.8	28	1,389
331	Primary Metal Manufacturing	7	15.2	22.2	42	999
332	Fabricated Metal Product Manufacturing	5.2	13.5	18.7	52	2,924
333	Machinery Manufacturing	4.1	9.3	13.4	66	1,510
334	Computer and Electronic Product Manufacturing	2.2	6.5	8.7	76	920

Table V-9, contd.
Injuries From Falls - General Industry, 2007
(Lost Work Day Cases per 10,000 Workers)

NAICS	NAICS Description	Falls - To Lower Level	Falls - On Same Level	All Falls	Industry Rank	Estimated Number of Falls
335	Electrical Equipment, Appliance, and Component Manufacturing	4.6	14.1	18.7	53	785
336	Transportation Equipment Manufacturing	5.3	13.7	19	48	3,083
337	Furniture and Related Product Manufacturing	4.1	10.2	14.3	61	777
339	Miscellaneous Manufacturing	4.4	10	14.4	60	988
423	Merchant Wholesalers, Durable Goods	9.7	9.2	18.9	50	6,483
424	Merchant Wholesalers, Nondurable Goods	12.5	18.3	30.8	22	6,985
425	Wholesale Electronic Markets and Agents and Brokers	5.2	4.5	9.7	73	323
441	Motor Vehicle and Parts Dealers	5.8	19.6	25.4	36	4,947
442	Furniture and Home Furnishings Stores	12.5	14.9	27.4	30	1,584
443	Electronics and Appliance Stores	N/A	N/A	N/A	N/A	N/A
444	Building Material and Garden Equipment and Supplies Dealers	10.2	17.1	27.3	31	3,730
445	Food and Beverage Stores	5.2	28.1	33.3	19	9,745
446	Health and Personal Care Stores	7.4	12.1	19.5	47	2,172
447	Gasoline Stations	4.7	26	30.7	23	2,804
448	Clothing and Clothing Accessories Stores	8.9	11.8	20.7	45	3,377
451	Sporting Goods, Hobby, Book, and Music Stores	5.4	13.4	18.8	51	1,199
452	General Merchandise Stores	8.6	28.3	36.9	11	10,341
453	Miscellaneous Store Retailers	7.7	21.2	28.9	27	2,427
454	Nonstore Retailers	10.7	46.8	57.5	4	3,000
481	Air Transportation	15.4	58.1	73.5	1	3,490
482	Railroads	25.9	3.3	29.2	25	642
483	Water Transportation	9.7	23.7	33.4	18	229
484	Truck Transportation	29.1	32.4	61.5	2	9,424
485	Transit and Ground Passenger Transportation	14.7	36.1	50.8	7	2,127
486	Pipeline Transportation	0	5.2	5.2	79	20
487	Scenic and Sightseeing Transportation	16.2	27.8	44	9	117
488	Support Activities for Transportation	12.3	21.7	34	17	1,971
492	Couriers and Messengers	17.7	37.9	55.6	5	3,177
493	Warehousing and Storage	8.7	25.7	34.4	16	2,048

Table V-9, contd.
Injuries From Falls - General Industry, 2007
(Lost Work Day Cases per 10,000 Workers)

NAICS	NAICS Description	Falls - To Lower Level	Falls - On Same Level	All Falls	Industry Rank	Estimated Number of Falls
511	Publishing Industries (except Internet)	4	9.6	13.6	63	1,414
512	Motion Picture and Sound Recording Industries	6.2	8.8	15	58	497
515	Broadcasting (except Internet)	5.9	13.1	19	49	574
516	Internet Publishing and Broadcasting	N/A	N/A	N/A	N/A	N/A
517	Telecommunications	10.2	16.8	27	33	3,137
518	Internet Service Providers, Web Search Portals, and Data Processing Services	1.9	8.7	10.6	70	493
519	Other Information Services	5	4.4	9.4	74	51
521	Monetary Authorities - Central Bank	0	0	0	82	0
522	Credit Intermediation and Related Activities	2.4	7.8	10.2	71	3,347
523	Securities, Commodity Contracts, and Other Financial Investments and Related Activities	0.9	1.6	2.5	80	235
524	Insurance Carriers and Related Activities	3.5	7.2	10.7	69	2,544
525	Funds, Trusts, and Other Financial Vehicles	0	8.8	8.8	75	23
531	Real Estate	10.5	18.5	29	26	4,505
532	Rental and Leasing Services	8.5	13.1	21.6	44	1,369
533	Lessors of Nonfinancial Intangible Assets (except Copyrighted Works)	14.2	7.7	21.9	43	65
541	Professional, Scientific, and Technical Services	2.1	3.5	5.6	78	4,510
551	Management of Companies and Enterprises	3.4	9.2	12.6	67	3,674
561	Administrative and Support Services	8.2	18.5	26.7	34	25,788
562	Waste Management and Remediation Services	20.2	26.3	46.5	8	1,606
611	Educational Services	5.9	14.3	20.2	46	6,019
621	Ambulatory Health Care Services	3.2	12.8	16	56	9,093
622	Hospitals	4.1	32.6	36.7	12	19,710
623	Nursing and Residential Care Facilities	5.8	53.2	59	3	17,659
624	Social Assistance	6.7	30	36.7	13	8,824
711	Performing Arts, Spectator Sports, and Related Industries	10	17.1	27.1	32	1,152
712	Museums, Historical Sites, and Similar Institutions	10.5	21.8	32.3	20	398

Table V-9, contd.
Injuries From Falls - General Industry, 2007
(Lost Work Day Cases per 10,000 Workers)

NAICS	NAICS Description	Falls - To Lower Level	Falls - On Same Level	All Falls	Industry Rank	Estimated Number of Falls
713	Amusement, Gambling, and Recreation Industries	6.2	28.7	34.9	15	4,975
721	Accommodation	8.6	31.2	39.8	10	7,485
722	Food Services and Drinking Places	3.2	19.9	23.1	41	687
811	Repair and Maintenance	10.8	13.9	24.7	37	3,229
812	Personal and Laundry Services	4.8	11.8	16.6	54	2,254
813	Religious, Grantmaking, Civic, Professional, and Similar Organizations	7.1	18.4	25.5	35	7,124

Source: U.S. Dept. of Labor, OSHA, Directorate of Evaluation and Analysis, Office of Regulatory Analysis, 2009, based on Bureau of Labor Statistics. Survey of Occupational Injuries and Illnesses: Case and Demographic Information, 2007.

Table V-10
Fall Incidents, by Type of Fall and Sector, 2007
(Lost Work Day Cases per 10,000 Workers)

Event Code	Type of Fall	Private Industry	Manu-facturing	Trade, Transport-ation, and Utilities	Inform-ation	Financial Activities	Profes-sional and Building Services	Education and Health Services	Leisure and Hospitality	Other Services
10	Fall, unspecified	0.4	0.4	0.5	0.2	0.2	0.2	0.6	0.3	0.2
11	Fall to lower level	8.1	5.2	10.3	6.3	4.3	4.8	4.7	4.7	7.8
110	Fall to lower level, unspecified	0.2	0.2	0.2	[b]	0.2	0.2	0.1	0.1	0.3
111	Fall down stairs or steps	2.0	1.4	1.7	2.1	1.9	1.7	2.8	2.2	2.5
112	Fall from floor, dock, or ground	0.6	0.3	0.9	0.5	[a]	0.3	0.1	0.2	1.5
1120	Fall from floor, dock, or ground level, unspecified	0.1	[a]	0.3	[b]	[b]	[a]	[b]	[b]	0.1
1121	Fall through existing floor opening	0.1	0.1	0.1	[b]	[b]	[a]	[a]	[a]	0.1
1122	Fall through floor surface	0.1	0.1	0.1	0.2	[a]	[a]	[b]	[a]	1.0
1123	Fall from loading dock	0.1	0.1	0.2	0.1	[b]	0.1	[b]	[b]	0.1
1124	Fall from ground level to lower level	0.1	[a]	0.1	0.1	[b]	0.2	[a]	0.1	0.1
1129	Fall from floor, dock, or ground level, n.e.c.	0.1	[a]	[a]	[b]	[b]	[a]	[a]	[b]	0.1
113	Fall from ladder	2.3	1.3	2.5	2.3	0.9	1.1	0.4	1.0	2.2
114	Fall from piled or stacked material	[a]	0.1	0.1	[b]	[b]	[b]	[b]	[b]	[b]

Table V-10, contd.
Fall Incidents, by Type of Fall and Sector, 2007
(Lost Work Day Cases per 10,000 Workers)

Event Code	Type of Fall	Private Industry	Manu-facturing	Trade, Transportation, and Utilities	Inform-ation	Financial Activities	Profes-sional and Building Services	Education and Health Services	Leisure and Hospitality	Other Services
115	Fall from roof	0.2	0.1	0.1	0.2	0.5	0.1	[b]	0.1	[b]
1150	Fall from roof, unspecified	0.1	[a]	[a]	0.2	[b]	0.1	[b]	[b]	[b]
1151	Fall through existing roof opening	[a]	[b]	[b]	[b]	[b]	[b]	[b]	[b]	[b]
1152	Fall through roof surface	[a]	[b]	[a]	[b]	[b]	[b]	[b]	[b]	[b]
1153	Fall through skylight	[a]	[a]	[b]	[b]	[b]	[b]	[b]	[b]	[b]
1154	Fall from roof edge	0.1	[a]	[b]	[b]	0.5	[b]	[b]	[a]	[b]
1159	Fall from roof, n.e.c.	[a]	[b]	[b]	[b]	[b]	[b]	[b]	[b]	[b]
116	Fall from scaffolding, staging	0.3	0.1	0.1	[b]	[a]	[a]	[b]	[a]	[b]
117	Fall from building girders or other structural steel	[a]	[a]	[a]	[b]	[b]	[a]	[b]	[b]	[b]
118	Fall from nonmoving vehicle	1.4	1.0	3.1	0.2	0.5	0.7	0.3	0.3	0.9
119	Fall to lower level, n.e.c.	1.1	0.8	1.6	0.9	0.4	0.6	1.0	0.9	0.4
12	Jump to lower level	0.5	0.4	0.6	0.4	[a]	0.6	0.1	0.2	0.4
120	Jump to lower level, unspecified	[a]	[a]	[a]	[b]	[b]	[b]	[b]	[b]	[b]
121	Jump from scaffold, platform, loading dock	0.1	0.1	[a]	0.1	[b]	0.2	[a]	[b]	[b]
122	Jump from structure, structural steel, n.e.c.	[a]	[a]	[a]	[b]	[b]	[a]	[b]	[a]	0.2
123	Jump from nonmoving vehicle	0.2	0.2	0.3	0.1	[b]	.1	[b]	[a]	0.2
129	Jump to lower level, n.e.c.	0.2	0.1	0.1	0.2	[a]	0.2	[a]	0.2	[b]
13	Fall on same level	17.6	13.3	21.0	11.9	9.2	9.8	27.2	22.6	14.6
130	Fall on same level,	0.2	0.1	0.1	0.3	0.2	0.2	0.2	0.1	0.1

Table V-10, contd.
Fall Incidents, by Type of Fall and Sector, 2007
(Lost Work Day Cases per 10,000 Workers)

Event Code	Type of Fall	Private Industry	Manu-facturing	Trade, Transportation, and Utilities	Inform-ation	Financial Activities	Profes-sional and Building Services	Education and Health Services	Leisure and Hospitality	Other Services
	unspecified									
131	Fall to floor, walkway, or other surface	15.0	10.9	17.6	10.6	7.9	8.5	25.0	20.5	12.0
132	Fall onto or against objects	2.8	2.1	3.1	1.0	1.1	1.1	1.8	2.0	2.4
139	Fall on same level, n.e.c.	0.2	0.2	0.2	[b]	0.1	0.1	0.3	0.1	0.1
19	Fall, n.e.c.	0.2	0.1	[a]	[b]	[b]	[a]	0.2	[a]	[b]
1	**All falls**	**26.7**	**19.5**	**32.4**	**18.8**	**13.8**	**15.4**	**32.8**	**27.9**	**23.0**

[a] Less than 0.1 cases per 10,000 workers

[b] Data not available

Source: U.S. Dept. of Labor, OSHA, Directorate of Evaluation and Analysis, Office of Regulatory Analysis, 2009, based on Bureau of Labor Statistics, Survey of Occupational Injuries and Illnesses: Case and Demographic Information, 2007.

BILLING CODE 4510–29–C

Among falls addressed by the proposed standards, the annual number of falls to a lower level resulting in a lost-workday injury ranges from 4.3 per 10,000 employees for the financial activities sector to 10.3 per 10,000 employees for the trade, transportation, and utility sector. Among specific types of falls to a lower level, falls from ladders represent 6.7 percent of all falls in manufacturing as reflected in an injury rate of 1.3 cases per 10,000 employees. Among other sectors, the injury rate from falls from ladders ranges from 0.4 per 10,000 employees in the education and health services sector to 2.5 per 10,000 employees in the trade, transportation, and utility sector.

In several sectors, falls down stairs or steps represent a major share of injuries from falls to a lower level. The proposed requirements for guardrails, handrails, and training would protect employees from these types of falls. Falls from floor holes, loading docks, roofs, and scaffolding are directly addressed by the proposed standard, but constitute much smaller shares of nonfatal fall accidents.

Fatalities and Injuries Prevented by the Proposed Subpart D and I Standards

Fatalities Prevented

OSHA's proposed standards for subparts D and I contain safety requirements designed to prevent, among other incidents, falls from ladders, scaffolds, unguarded floor holes, and unprotected platform edges. These types of falls are classified as "falls to lower level." "Falls on the same level" include slips and trips from floor obstructions or wet or slippery working surfaces. The proposal has relatively few new provisions addressing falls on the same level.

Combining the data in Tables V–6 and V–7 with other fatality data from BLS, Table V–11 shows the estimated number of annual fatalities from falls in general industry. Based on 2006 and 2007 data, OSHA calculated an average of 276 fatal falls per year. ERG allocated this total among the different fall categories based on overall fatal fall accident experience from 1992 to 2002 as derived from the BLS Census of Fatal Occupational Injuries and summarized in Table V–7. On this basis, an estimated 196 fatalities per year result from falls to lower level, while the remaining 80 fatalities result from falls on the same level or other types of falls.

In examining the costs of this proposal, ERG found, after reviewing inspection results, that employers are generally in compliance with existing standards that have been in place for over 30 years (*see* Table V–15). However, this general compliance does not necessarily mean that existing fall fatalities are not preventable by the existing standard. For example, it could be the case that employers comply with a standard 99.9 percent of the time, but that all fatalities are the result of the 0.1 percent of the time employers are not in compliance. Thus, it is possible for there to be a high level of compliance with a standard, but for all fatalities, nevertheless, to be the result of non-compliance with that standard.

TABLE V–11—FATALITIES POTENTIALLY PREVENTED AS A RESULT OF COMPLIANCE WITH THE PROPOSED STANDARD FOR SUBPARTS D AND I

Falls by type	Distribution of fatal falls by type	Estimated annual number of fatal falls by type		Incremental preventability of the proposed standard		Annual fatalities potentially prevented by the proposed standard (a)
Fall to lower level	100.0%	196				
Fall down stairs or steps	4.2%		8	Low	5.0%	0.4
Fall from floor, dock, or ground level	5.1%		10	High	10.0%	1.0
Fall from ladder	18.6%		36	High	15.0%	5.5
Fall from piled or stacked material	0.1%		0	High	10.0%	0
Fall from roof	8.9%		17	High	15.0%	2.6
Fall from scaffold, staging	8.6%		17	Very High	40.0%	6.7
Fall from building girders or other structural steel.	0.8%		2	High	10.0%	0.2
Fall from nonmoving vehicle	15.8%		31	No	0.0%	0
Fall to lower level, n.e.c.	23.1%		45	Uncertain	2.5%	1.1
Fall to lower level, unspecified	14.6%		29	Uncertain	2.5%	0.7
Fall from ship, boat, n.e.c.		27		Low	5.0%	1.4
Other falls		8		Very Low	0.0%	0
Totals		230	196			20.0

Due to rounding, figures may not sum to totals shown.
(a) Prevented fatalities were calculated as the product of annual fatal falls and incremental preventability rate, by type.
Source: U.S. Dept. of Labor, OSHA, Office of Regulatory Analysis, 2009, based on ERG, 2007; OSHA IMIS, 1995–2001; and Bureau of Labor Statistics, Census of Fatal Occupational Injuries, 1992–2007.

For the purposes of this analysis, OSHA did not attempt a quantitative analysis of how many fatal falls could be prevented by full and complete compliance with the existing standard. However, a qualitative examination of the fatal falls to a lower level shows that a majority, and perhaps a large majority, could be prevented by full compliance with the existing regulations. For this analysis, OSHA and ERG have taken the approach that, for current levels of enforcement, existing fall fatality rates can be used as a baseline from which to measure the impacts of the proposal in reducing falls. This is because the existing fall fatality rate reasonably represents what is preventable with the existing rules and the existing degree of enforcement and compliance with these rules.

A comparison of the proposed and existing standards shows that the new provisions largely concern training and inspections, rather than requirements for additional or more stringent engineering or work practice controls (*see* section F below in this PEA). In addition, the new standard serves to

simplify and clarify the existing standard and bring the existing standard into conformance with various voluntary standards. The benefits in terms of reductions in fatal falls can be expected to come in the form of the effects of increased training, inspections, and certifications in preventing falls, many of which are preventable by existing regulations which are not being fully followed. OSHA believes that the proposed requirements for training, inspections, and certifications can serve to improve safety and also compliance with existing requirements.

OSHA based its analysis of accident preventability on ERG's professional judgment and two published studies. The studies show that well-designed training programs are an effective means of improving workplace safety. A NIOSH review of the literature concerning the benefits of training reported that the studies were nearly unanimous in showing that improved and expanded training increases hazard awareness and promotes the adoption of safe work practices. However, the quantitative relationship between increased training and reduced accident rates remains uncertain (Cohen and Colligan, 1988, Ex. 7); analysis of past OSHA experience shows that requiring training programs does not lead to preventing the majority of accidents addressed by the training (Seong and Mendeloff, 2004, Ex. 8). For this reason, ERG concluded that the incremental benefits from the proposed standards would be modest (ERG, 2007, Ex. 6).

ERG estimated the number of fatal falls that would be prevented through compliance with the proposed standards, categorized by type of fall. Since proposed subpart D focuses heavily on ladder safety, ERG estimated the highest preventability impact—15 percent—for falls from ladders. For other types of falls directly addressed in the proposal (*e.g.,* falls from floor or dock), ERG estimated a moderately high preventability impact of 10 percent. For types of falls less directly or comprehensively addressed in the proposal (*e.g.,* falls down stairs or steps), ERG estimated a relatively low preventability impact (5 percent). Several classes of falls are not specifically defined by the BLS injury survey, and for these, ERG estimated a low level of preventability (2.5 percent). (*See* ERG, 2007, Ex. 6, p. 4–10 to 4–14.)

For falls from roofs, ERG assigned a preventability rate of 10 percent. OSHA believes that compliance with the provisions in proposed subpart D addressing safety systems, work practices, and training associated with the fall hazards encountered on roof surfaces—including the requirements referenced in consensus standards such as ANSI/ASSE A1264.1–2007, Safety Requirements for Workplace Walking/Working Surfaces and Their Access; Workplace, Floor, Wall and Roof Openings; Stairs and Guardrail Systems—will yield a preventability rate comparable to that estimated for ladders: 15 percent. Therefore, in this preliminary analysis of benefits, OSHA has applied a preventability rate of 15 percent to roof accidents.

For falls from scaffolds or staging, ERG assigned a preventability rate of 10 percent. In light of the substantial strengthening of the fall protection requirements for rope descent systems (RDS), specified in proposed paragraph 1910.27(b), OSHA believes that a preventability rate much higher than 10 percent can be applied to scaffold accidents. Because, according to OSHA and BLS accident data, approximately 40 percent of lost-workday scaffold accidents involve rope descent systems, and due to the proposed standard's comprehensive approach to RDS fall protection, OSHA estimates that at least 40 percent of deaths and injuries associated with scaffolds (including non-RDS scaffolds) will be prevented by the proposed standard. OSHA's rationale for assigning this preventability rate to scaffolds is discussed immediately below. All of the fall preventability factors are presented in Table V–11.

As shown in Table V–11, falls from scaffolds or staging are one of the leading types of fall categories in general industry. According to the Bureau of Labor Statistics, falls from scaffolds or staging caused an annual average of 18 deaths and 1,474 lost-workday injuries over a recent eleven-year period (1992–2002). OSHA reviewed a subset of scaffold accidents recorded in the Agency's Integrated Management Information System (IMIS) inspection database to expand ERG's analysis of the extent to which the proposed standard would prevent accidents involving commercial window washing, and to gain more general insights into the preventability of fatal falls (OSHA, 2009).

OSHA reviewed 36 incidents (some involving multiple casualties) that occurred during the period January 1995 to October 2001 (5 years and 10 months), where workers in general industry were either injured or killed from a fall from an elevated scaffold or a similar surface during commercial window washing operations. OSHA's analysis is presented in Table V–12. In reviewing each incident description, OSHA evaluated the probability that the incident would have been prevented by one of the following:

1. The existing standard for walking-working surfaces;

2. ANSI/IWCA I–14.1, Window Cleaning Safety Standard, an earlier version of which is referenced in a 1991 OSHA memorandum to regional administrators on the use of descent control devices (rope descent systems) by employees performing building exterior cleaning, inspection, and maintenance (OSHA, 1991a); or

3. The proposed standard.

Table V–12, below, summarizes OSHA's analysis of IMIS window cleaning accidents. Of the 36 window washing incidents in the database, 21 incidents were caused by a malfunction in, or unsafe use of, rope descent systems (including lifelines). Because the existing standard for walking-working surfaces lacks provisions that directly address rope descent systems (RDS), OSHA believes that none of the RDS incidents would have been prevented by full compliance with the current rule.

TABLE V–12—FALL INCIDENTS ASSOCIATED WITH THE USE OF SCAFFOLDS DURING WINDOW CLEANING

[OSHA IMIS, 1995–2001]

Cause of incident	Incidents potentially preventable by:		
	Existing standard	OSHA 1991 memo	Proposed standard
Malfunction/Mishandling of Rope Descent System or Lifelines	N/A	19	21
Anchorage Failure	N/A	7	8
Inadequate Training	N/A	12	14

TABLE V–12—FALL INCIDENTS ASSOCIATED WITH THE USE OF SCAFFOLDS DURING WINDOW CLEANING—Continued

[OSHA IMIS, 1995–2001]

Cause of incident	Incidents potentially preventable by:		
	Existing standard	OSHA 1991 memo	Proposed standard
Other Factors (suspension scaffold hardware, manlift, powered platform, roof top equipment, safety belt)	4	N/A	6

*N = 36. Some incidents are assigned to more than one category.
Source: U.S. Dept. of Labor, OSHA, Directorate of Standards and Guidance, and Office of Regulatory Analysis, 2009.

Of the 21 RDS incidents in the database, in OSHA's judgment, 19 of them would have been prevented if the employer had adhered to the safety recommendations specified in OSHA's 1991 window cleaning memorandum, which in turn refers to an existing consensus standard. The remaining two RDS incidents, in OSHA's estimation, would not be prevented by the current OSHA standard and the existing consensus standards, but would be prevented by the proposed standard (in addition to the other 19 RDS incidents prevented by the proposed standard).

One of the primary causes of accidents in commercial window washing is the failure of the rooftop anchorage to support the suspended scaffold. The proposed standard requires that employers use proper rigging, including sound anchorages and tiebacks, when rope descent systems are used. OSHA identified eight incidents in the IMIS database where anchorage failure contributed to the accident. In OSHA's judgment, all eight anchorage-related incidents involved factors that are addressed by the proposed standard and therefore are potentially preventable. All but one of these eight incidents involved factors addressed by the 1991 memo.

As noted earlier in this section, when workers are adequately trained—for example in the proper use of harnesses and lifelines—accidents are less likely to occur. OSHA identified fourteen incidents in the IMIS database where, if workers had applied the lessons provided in the kind of training prescribed in the proposed standard, death or injury to the worker might have been prevented. Of these fourteen cases, twelve involved factors that are addressed by the 1991 memo.

Other factors that led to a fall from elevation, such as equipment failure involving suspension scaffolds and powered platforms, contributed to the death or injury of workers during window washing operations. These incidents are recognized in the fourth row of Table V–12.

OSHA believes that this analysis illustrates some of the complexities in assigning benefits to this standard. Chief among these complexities is the argument that full compliance with the proposed standard will prevent fatalities not preventable by the existing standard due to the proposed addition of major provisions addressing window washing.

Secondly, there is the question of the proper baseline for such an analysis. OSHA may not have any rule addressing RDS systems or anchorages for these and other suspended scaffolds, but there are consensus standards and OSHA enforcement policies that apply OSHA's general duty clause when existing standards may not apply. The changes from a baseline of current enforcement practice are much more marginal than if no standards or enforcement initiatives existed for a particular hazard. Nevertheless, a simple comparative prevention table of this kind may not capture the difference between occasional enforcement using the general duty clause and consensus standards, and enforcement of an actual standard. Adopting the additional protections afforded by consensus standards and materials referenced in general duty citations into a standard make the information more available, assures that everyone affected can readily consult the relevant rules, and simplifies enforcement. These are desirable ends even if no additional fatalities are prevented, and probably would serve to prevent some current fatalities and injuries.

Thirdly, there is the issue, already discussed above, of how to treat the benefits of training requirements. OSHA normally assumes for the purposes of both benefit and cost analysis, that there is full compliance with a rule. For some kinds of rules, it can readily be determined if full compliance with the rule would have prevented an accident. However, for training rules, it is not at all obvious that full compliance—assuming training is given—will prevent accidents that the training is designed to address (Seong and Mendeloff, 2004). OSHA has made a relatively low estimate of the effects of such training requirements in Table V–11. The approach used in Table V–12 suggests that a much higher estimate might be made if employees are assumed to act as they have been trained to act.

Finally, the proposed standard inevitably builds, for the most part, on an existing framework. The existing framework, if fully followed, would prevent many accidents. While the new regulation adds new kinds of provisions, it also tries to improve compliance with the existing regulation in a variety of ways. Ways in which it may improve compliance include additional training; additional certification; bringing into the regulatory framework materials and ideas from consensus standards; and codifying existing enforcement practice. Steps of this kind have a variety of desirable, though difficult-to-quantify effects.

Based on ERG's estimates, and applying the preventability rate for scaffolds as explained above, OSHA concluded that the proposed standards would prevent 20 fall fatalities a year, or approximately 9 percent of the fatal falls in general industry that would be addressed by the proposed standard. OSHA believes that this is a conservative estimate, in that the training and work practices specified in this proposal would likely improve the use and application of safety equipment (including personal fall protection equipment), thereby further reducing fatalities and injuries.

OSHA requests comment on the Agency's analysis of scaffold accidents described above and on the various approaches to measuring potential benefits achievable from compliance with the proposed standard in addition to those described in Tables V–11, V–12 (above), and V–13 (below).

Injuries Prevented

For the purposes of estimating the number of lost workday injuries that might be prevented by the proposed standards, OSHA used the same preventability factors for the proposal as

for fatal falls, and applied them to lost workday injuries involving falls. Table V–13 shows, by type of fall, the distribution of lost-workday injuries for general industry; these injury categories were presented earlier in this section in Table V–8. The BLS data show that, for non-fatal falls to a lower level, 30.4 percent of injuries are due to falls down stairs or steps, while 22.4 percent are the result of falls from ladders. Applying these and other fall injury rates (*see* Table V–10) to the estimates of total employment within affected sectors in general industry (*see* Table V–1), OSHA estimates that, on average, 63,028 lost-workday fall injuries occur each year for work operations directly affected by the proposed revisions to subparts D and I. Using the same preventability estimates that were applied to fatal incidents, OSHA estimates that 3,706 lost-workday fall injuries would be prevented annually through compliance with the proposed revisions to subparts D and I.

TABLE V–13—NONFATAL LOST-WORKDAY INJURIES POTENTIALLY PREVENTED AS A RESULT OF COMPLIANCE WITH THE PROPOSED STANDARD FOR SUBPARTS D AND I

Falls by type	Distribution of falls resulting in lost workdays, by type	Estimated annual number of nonfatal falls, by type	Incremental preventability of the proposed standard	Annual nonfatal injuries potentially prevented by the proposed standard (a)	
Fall to lower level	100.0%	55,716			
Fall down stairs or steps	30.4%	16,916	Low	5.0%	846
Fall from floor, dock, or ground level	7.0%	3,878	High	10.0%	388
Fall from ladder	22.4%	12,472	High	15.0%	1,871
Fall from piled or stacked material	0.5%	283	High	10.0%	28
Fall from roof	1.7%	959	High	15.0%	144
Fall from scaffold, staging	0.8%	434	Very High	40.0%	174
Fall from building girders or other structural steel.	0.2%	131	High	10.0%	13
Fall from nonmoving vehicle	19.8%	11,018	No	0.0%	0
Fall to lower level, n.e.c.	15.1%	8,433	Uncertain	2.5%	211
Fall to lower level, unspecified	2.1%	1,192	Uncertain	2.5%	30
Fall from ship, boat, n.e.c.		30	Low	5.0%	2
Other falls		7,281	Very Low	0.0%	0
Totals		63,028 55,716			3,706

Due to rounding, figures may not sum to totals shown.
(a) Prevented injuries were calculated as the product of annual nonfatal falls and incremental preventability rate, by type.
Source: U.S. Dept. of Labor, OSHA, Office of Regulatory Analysis, 2009, based on ERG, 2007; OSHA IMIS, 1995–2001; and Bureau of Labor Statistics, Survey of Occupational Injuries and Illnesses: Case and Demographic Information, 2007.

Monetized Benefits, Net Benefits, and Cost Effectiveness

The previous section showed that OSHA estimates that compliance with the proposed standards will prevent 20 deaths and 3,706 lost workday injuries each year. Consistent with other regulatory analyses recently issued by OSHA, the Agency has assigned a dollar value to these safety benefits.

In estimating the value of preventing a fatality, OSHA has followed the approach established by the U.S. Environmental Protection Agency (EPA). EPA's *Guidelines for Preparing Economic Analyses* provides a detailed review of the methods for estimating mortality risk values and summarizes the values obtained in the literature (EPA, 2000). Synthesizing the results from 26 relevant studies, EPA arrived at a mean value of a statistical life (VSL) of $4.8 million (in 1990 dollars). EPA recommends this central estimate, updated for inflation (the value is $7.2 million in 2008 dollars), for application in regulatory analyses. This VSL estimate is also within the range of the substantial majority of such estimates in the literature ($1 million to $10 million per statistical life), as discussed in OMB Circular A–4 (OMB, 2003). Applying a VSL of $7.2 million to the estimated number of prevented fatalities, OSHA estimates that the dollar value of the benefits from compliance with proposed subparts D and I will be $144 million annually.

OSHA also reviewed the available research literature regarding the dollar value of preventing an injury. Kip Viscusi and Joseph Aldy conducted a critical review of 39 studies estimating the value of a statistical injury (Viscusi and Aldy, 2003, Ex. 9). In their paper, Viscusi and Aldy reviewed the available willingness to pay (WTP) literature to identify a suitable range of estimates; using WTP to value non-fatal injuries is the approach recommended in OMB Circular A–4.

Viscusi and Aldy found that most studies resulted in estimates in the range of $20,000 to $70,000 per injury, although several studies resulted in even higher estimates. This range of values is partly explained by the fact that some studies used an overall injury rate, and others used only injuries resulting in lost workdays. The injuries that would be prevented by these proposed standards often involve hospitalization and, therefore, are likely to be more severe than the majority of lost workday injuries. In addition, injuries resulting from falls involve more pain and suffering, more expensive treatments, and generally longer recovery periods than other lost workday injuries.[17]

Thus, it is reasonable to believe that the value of a statistical injury for this rulemaking will be in the upper part of the reported range of estimates. Nevertheless, OSHA has conservatively used a mid-range estimate—$50,000—to assess monetized benefits for this preliminary analysis. Thus, with 3,706 injuries a year potentially prevented by the proposed standards, OSHA estimates that the dollar value of prevented injuries through compliance

[17] In 2007, the median number of days away from work was 15 days for falls to a lower level, whereas the median number of days away from work for all events or exposures leading to injury or illness was 7 days (BLS, 2009).

with proposed subparts D and I will total $185.3 million annually.

OSHA estimates that the combined dollar value of prevented fatalities and injuries through compliance with the proposed revisions to subparts D and I will total $328.5 million per year. Comparing gross monetized benefits with costs of compliance, OSHA estimates that the net monetized benefits of the proposed standards will be $155.4 million, after rounding ($328.5 million in benefits—$173.2 million in costs). OSHA notes that these net benefits exclude any unquantified benefits associated with revising the standards to provide updated, clear, and consistent requirements. OSHA requests comments from the public regarding these figures and any benefits estimates presented in this section. Table V–14 summarizes the costs, benefits, net benefits, and cost effectiveness of the proposed standard.

There are other benefits of the proposal that OSHA has neither quantified nor monetized. First, OSHA has not attempted to estimate the number of fall injuries prevented that do not result in lost workdays. Second, OSHA has not attempted to estimate the improvements in efficiency of compliance associated with clarifying the existing rule and bringing it into closer correspondence with current voluntary standards.

TABLE V–14—NET BENEFITS AND COST EFFECTIVENESS OF THE PROPOSED REVISION TO OSHA'S WALKING-WORKING STANDARDS

Annualized Costs	
§ 1910.22 General Requirements	$15.7 million.
§ 1910.23 Ladders	$9.7 million.
§ 1910.24 Step Bolts and Manhole Steps	$3.7 million.
§ 1910.27 Scaffolds	$73.0 million.
§ 1910.28 Duty to Have Fall Protection	$0.09 million.
§ 1910.29 Fall Protection Systems Criteria and Practices	$8.4 million.
§ 1910.30 Training Requirements	$44.1 million.
§ 1910.140 Fall Protection	$18.5 million.
Total Annual Costs	$173.2 million.
Annual Benefits	
Number of Injuries Prevented	3,706.
Number of Fatalities Prevented	20.
Monetized Benefits (assuming $50,000 per injury and $7.2 million per fatality prevented)	$328.5 million.
OSHA standards that are updated and consistent with voluntary standards	Unquantified.
Net Benefits (benefits minus costs)	$155.4 million.
Cost Effectiveness: Compliance with the proposed standards would result in the prevention of 1 fatality and 231 injuries for every $10 million in costs, or alternatively, $1.90 in benefits per dollar of costs.	

Source: U.S. Dept. of Labor, OSHA, Directorate of Evaluation and Analysis, Office of Regulatory Analysis, 2009.

Sensitivity of Estimates

OSHA's benefits estimates are most sensitive when it comes to estimating the percentage of current injuries and fatalities that can be avoided by full compliance with the proposed standard. OSHA closely examined available reports of fatalities related to the provisions in the existing and proposed standards and found that 20 fatalities, or approximately 9 percent of fall fatalities, would be prevented if employers comply with the measures in the proposal. The true benefits of the proposal depend on how well the cases reviewed represent actual fall-related fatalities in general industry.

The Agency believes that its estimate of annual fatalities involving slips, trips, and falls (about 230) in general industry is much less sensitive than the estimate of the percentage of fatalities avoided, because the estimate of the annual number of baseline fatalities is derived from 2 years of recent accident data with averages corroborated by 11 prior years of data. Furthermore, as noted earlier, OSHA believes that its benefits estimates are conservatively low. Accordingly, training and work practices specified in this proposal would likely improve the use and application of safety equipment (including personal fall protection equipment), thereby further reducing fatalities and injuries.

In addition to estimating annualized costs using a discount rate of seven percent, OSHA, for sensitivity purposes, applied an alternative discount rate of three percent to up-front costs. Under the alternative scenario of a three-percent discount rate, OSHA estimates that annualized costs would decline from $173.2 million to $168.8 million. For both this scenario and for the primary (seven-percent rate) scenario, OSHA assumed that all costs (first-year and recurring) will be incurred upon implementation of the final standard (*i.e.,* there are no phase-in provisions). OSHA is also assuming that the benefits outlined in this section will accrue once the rule takes effect.

According to the Agency's models for estimating costs and monetized benefits, the proposed standard generates considerable positive net benefits; that is, expected benefits are much greater than expected costs. Only significant errors in OSHA's analysis would bring true net benefits to or below zero. For net benefits to fall to zero, for example, the Agency would have had to underestimate the number of buildings with anchorages subject to inspection and certification by two-fold (from about 750,000 buildings to 1.5 million buildings), and would also have had to underestimate the number of employees who would require training by three-fold (from 363,000 to 1.09 million). In that case, estimated compliance costs would rise to roughly $334 million annually, or about equal to the value of estimated monetary benefits. Alternatively, true net benefits would decline to zero if, for example, the Agency has overestimated injuries prevented by the standard by at least a factor of five or more (actual prevented

injuries are approximately 599, down from 3,706 as estimated in this PEA).

E. Technological Feasibility

Based on the substantial evidence collected throughout the history of this rulemaking, including the data and comments submitted to the record in response to the earlier proposed standard published on April 10, 1990, and the notice of re-opening of the record on May 2, 2003, OSHA has determined that compliance with the proposed revisions to subparts D, I, and other subparts in part 1910 (general industry), as described in this proposed rule, is technologically feasible. The details of this conclusion with regard to specific requirements are presented in this subsection.

General Requirements (§ 1910.22)

Section 1910.22 of proposed subpart D revises existing requirements addressing housekeeping, safe aisles and passageways, covers and guardrails, and floor loading protection, and introduces new requirements associated with broad areas of safety on walking-working surfaces. Proposed paragraphs (a), (b), (c), and (d) address, respectively, surface conditions, application of loads, access and egress, and maintenance and repair.

Proposed paragraph (a) requires that all walking-working surfaces be designed, constructed, and maintained free of hazards that can result in death or serious injury to employees. Data in OSHA's inspection file analyzed by ERG (ERG, 2007, Ex. 6) indicate a high level of compliance with similar requirements in existing subpart D, suggesting that there have been few if any technical challenges to employers; therefore, this provision is technologically feasible.

Proposed paragraph § 1910.22(b) requires that all walking-working surfaces be designed, constructed, and maintained to support their maximum intended load and that the maximum intended load not be exceeded when employees use that surface. This language restates and simplifies the current regulatory, text and should not present any technological feasibility difficulties.

Proposed paragraph § 1910.22(c) requires that employers ensure that employees can safely move from one surface to another. Although new, this requirement will, in OSHA's judgment, not impose any duties on employers beyond the limits of feasibility.

Proposed paragraph § 1910.22(d) requires that all walking and working surfaces be regularly inspected, maintained, and repaired by, or under the supervision of, qualified persons (as defined by the proposed standard), and that all hazardous conditions be corrected, repaired, or guarded to prevent employee use until repairs are made. The inspection, maintenance, repair, and guarding of surfaces can be accomplished with technologically feasible and currently available methods.

Ladders (§ 1910.23)

Proposed section 1910.23 covers ladders. Proposed § 1910.23(a) specifies that the section applies to all ladders except for ladders that are used only for firefighting or rescue operations and ladders that are designed into a machine or piece of equipment. Proposed § 1910.23(b) provides general requirements for all ladders; proposed paragraph (c) addresses portable ladders; proposed paragraph (d) presents standards for fixed ladders; and proposed paragraph (e) addresses mobile ladder stands and mobile ladder stand platforms. The requirements in this proposed section are partly based on current American National Standards Institute (ANSI) standards, designated A14 series. The ANSI standards provide guidelines for industry and are generally compatible with current industry practices and technology. Since virtually all manufactured ladders are already made and tested to meet the ANSI standards, OSHA anticipates few problems regarding technological feasibility.

Most of the requirements for ladders in the proposed revision to subpart D do not represent any change from existing OSHA requirements. For both current and new requirements, existing and readily available technology is capable of meeting or exceeding the design and strength criteria specified for ladders. The proposed language is intended to be clearer and more concise than the current regulatory text. Moreover, greater compliance flexibility has been introduced into the standard, such as in the case of the range provided in the spacing requirements for rungs, cleats, and steps (*see* proposed § 1910.23(b)).

Comments submitted to the docket in response to the 1990 proposed rule generally confirmed OSHA's preliminary conclusion that compliance with the proposed requirements for ladders would be technologically feasible. Although several commenters addressed the appropriateness or the costs associated with the proposed ladder requirements, the technological feasibility of the requirements was not questioned.

Training in the proper care, use, and inspection of ladders is grouped with other training requirements under proposed § 1910.30. Compliance with these proposed training requirements does not require any additional or new technology.

Step Bolts and Manhole Steps (§ 1910.24)

Provisions in revised subpart D for step bolts and manhole steps provide basic criteria for the safe design, construction, and use of these components. For example, proposed § 1910.24(a)(2) specifies that step bolts must be spaced uniformly, between 12 inches (30 cm) and 18 inches (46 cm) center to center, while proposed § 1910.24(b)(2)(iv) would require that manhole steps be spaced uniformly, not more than 16 inches (41 cm) apart. Although these proposed requirements would be new to subpart D, the engineering criteria are based on consensus standards established by the American Society for Testing and Materials (ASTM), which have been widely adopted throughout industry. Therefore, OSHA believes that existing technology is capable of meeting these performance criteria and can be feasibly applied.

Stairways (§ 1910.25)

Proposed § 1910.25 describes OSHA safety specifications for stairs, and covers all types except stairs serving floating roof tanks; stairs on scaffolds; stairs designed into machines or pieces of equipment; and stairs on mechanized mobile equipment. Requirements in this proposed section address the obligations to install handrails, stair rail systems, and guardrail systems, as necessary. Other requirements in this proposed section describe design specifications such as the appropriate load capacities that stairs must be able to support, minimum vertical clearances for different types of stairs, the height of risers, the depth of treads, and the proper angle of stairs. These proposed requirements are not substantially different from those of the existing standard, are drawn from NFPA and ANSI consensus codes, and can be feasibly incorporated into industry practice with existing technology.

Dockboards—Bridge Plates (§ 1910.26)

Proposed § 1910.26 provides for the safe movement of personnel and equipment on dockboards and bridge plates, and would relocate, update, and clarify requirements for dockboards located in existing § 1910.30, Other working surfaces. These surfaces must be designed, constructed, and maintained to support their maximum intended load and prevent equipment

from running off the edge. According to proposed paragraph § 1910.26(c), portable dockboards must be secured with anchors or other means, where feasible, to prevent displacement while in use. Other requirements in this proposed section prevent the sudden displacement of vehicles on dockboards that are in use, and direct the provision of handholds or other means for safe handling. Compliance with the revised requirements for dockboards and bridge plates do not necessitate the use of any new technologies, materials, or production methods, and is thus technologically feasible.

Scaffolds and Rope Descent Systems (§ 1910.27)

Proposed § 1910.27 would introduce to subpart D the current requirements for scaffolds in the construction standards. Thus, for revised subpart D, OSHA proposes to directly reference subpart L in part 1926. In addition, new requirements for rope descent systems would ensure daily inspection; proper rigging; the provision of a separate personal fall arrest system; minimum strength criteria for lines used to handle loads; establishment of rescue procedures; effective padding of ropes; and stabilization for descents greater than 130 feet. Although new to subpart D, these and other specifications for the safe use of scaffolds have been recognized throughout industry for many years, owing to the publication of ANSI I–14.1–2001, Window Cleaning Safety (Ex. 10), and a March 12, 1991, OSHA memorandum to Regional Administrators addressing the ANSI standard and the provisions listed above (Ex. OSHA–S029–2006–0662–0019). Therefore, OSHA judges the requirements in this new section on scaffolds to be technologically feasible.

Duty To Have Fall Protection (§ 1910.28)

Proposed § 1910.28 restates, clarifies, and adds flexibility and consistency to existing OSHA requirements for providing fall protection to employees. In addition to general requirements for the strength and structural integrity of walking-working surfaces, this proposed section also includes detailed specifications on the following surfaces for which employers have a duty to provide fall protection:

- Unprotected sides and edges;
- Holes;
- Dockboards (bridge plates);
- Runways and similar walkways;
- Dangerous equipment;
- Wall openings;
- Repair, service, and assembly pits four to ten feet in depth;
- Fixed ladders;
- Outdoor advertising structures (billboards);
- Stairways;
- Scaffolds and rope descent systems; and
- Walking-working surfaces not otherwise addressed.

Hazards on walking-working surfaces can include the accidental displacement of materials and equipment. To prevent objects from falling to lower levels and to protect employees from the hazards of falling objects, proposed § 1910.28(c) provides for head protection, screens, toeboards, canopy structures, barricades, and other measures.

The revised subpart D standard reaffirms the existing Agency interpretation and enforcement practice that fall protection is generally required for fall hazards associated with unprotected sides or edges of any surface presenting a fall hazard of four feet or more. In this regard, the obligation of employers to provide fall protection has not substantially changed through the revision of subpart D.

Whereas the existing requirements specify that employees must be protected by installing standard guardrail systems or equivalent systems, the revised standard more clearly allows employers to provide fall protection through any of several methods, including guardrails, personal fall arrest systems, and safety nets. OSHA recognizes that some work surfaces may present difficult challenges when fall protection must be applied. One commenter (Ex. OSHA–S041–2006–0666–0194) pointed out that maintenance work may sometimes require that employees be located on equipment such as compressors, turbines, or pipe racks at elevations in the range of four to ten feet above lower surfaces, and that guardrails, platforms, ladders, or tying off would not always be possible in such situations. OSHA notes that its enforcement procedures allow special consideration in unique circumstances when compliance with a particular standard may not be feasible or appropriate.[18]

In general, with few exceptions, employers should be able to address and eliminate employee exposures to potential slip, trip, and fall hazards by planning and designing facilities and work procedures in anticipation of providing employees with adequate protection from those hazards. Based on widespread baseline industry practice, the proposed fall protection requirements are, in OSHA's estimation, technologically feasible.

Fall Protection Systems Criteria and Practices (§ 1910.29); Training Requirements (§ 1910.30); General Requirements [for Personal Protective Equipment]; Hazard Assessment and Training (§ 1910.132); and Personal Fall Protection Systems

Fall Protection Criteria (§ 1910.140)

In proposed § 1910.29, OSHA specifies or provides references for revised criteria for fall protection systems such as guardrail systems, handrails, stair rail systems, toeboards, designated areas, restraint line systems, and safety net systems. Criteria for personal fall protection systems are provided in proposed § 1910.140, a new section that would be added to current subpart I.

With regard to guardrail systems, the revised subpart D standard does not substantially modify existing requirements involving height, strength, or other criteria. Some guardrails in violation of existing standards are granted an exception under the revised standard, and in some circumstances for which the existing standard requires guardrails (or equivalent protection), the revised standard allows the alternative of using designated areas.

Rather than explicitly mandating the use of a midrail in the design of a guardrail system as in the existing subpart D standard, the revised subpart D standard uses performance-oriented criteria that allow midrails, screens, mesh, intermediate vertical members, or equivalent intermediate structural members. Compliance with the existing standard would generally also meet the requirements of the revised standard. Furthermore, the revised standard allows the employer to choose any of a wide variety of currently used and readily available guardrail system materials and designs to meet the performance-oriented criteria. Based on these considerations, revisions to the existing subpart D requirements for guardrail systems do not involve any technological feasibility constraints.

Proposed paragraph § 1910.29(c) would reference the construction standards to specify criteria for safety net systems. The criteria for safety nets established through this proposed rulemaking would include requirements for drop tests and inspections for each safety net installation. Other criteria for safety nets established through provisions of the revised subpart D involve design and strength standards. All of these criteria are currently achieved by existing and commonly

[18] See OSHA's Field Operation Manual: *https://www.osha.gov/OshDoc/Directive_pdf/CPL_02–00–148.pdf.*

available safety net systems. The revised requirements for the installation of safety net systems reflect basic safety considerations that have been adopted by manufacturers of equipment and by employers. Readily available and currently used technology is capable of meeting these proposed requirements.

The revised subpart D standard introduces the concept of designated areas (proposed § 1910.29(d)) as a means of fall protection available to employers as an option in addition to other acceptable fall protection measures in certain circumstances. The technology necessary to implement this option consists of basic materials such as rope, wire, or chain, and supporting stanchions. The criteria specified in the revised standard for designated areas such as for strength, height, and visibility are capable of being achieved with currently available materials and technology.

Requirements for covers for holes in floors, roofs, and other walking-working surfaces in the revised standard for fall protection systems (*see* proposed § 1910.29 (e)) are similar to those in the existing subpart D standard, with the exception of new provisions for visible warnings and measures to prevent accidental displacement. The performance-oriented criteria applicable to covers allow a wide variety of technological solutions to be applied.

Requirements in revised subpart D for handrail and stair rail systems (§ 1910.30(f)) specify criteria for height, strength, finger clearance, and type of surface, among others. These criteria are currently being met with existing technology, and a wide variety of different materials and designs are available to comply with the requirements.

Proposed § 1910.29 contains design and strength criteria for grab handles, cages, and wells. For the most part, these proposed standards update and provide greater flexibility to existing requirements in subpart D. A lone exception, a new requirement that landing platforms for cages and wells have the same strength as ladders, would not be expected to create feasibility concerns considering the availability of appropriate materials and engineering expertise.

Proposed new language for subpart D would clearly specify criteria for systems that provide falling object protection. The provisions addressing toeboards in the existing requirements have been re-written in more flexible and concise language, while other requirements for guardrail systems and canopies specified in the proposed design criteria are within current engineering norms. Therefore, no feasibility difficulties would be expected for the technology applied to falling object protection.

Finally, the proposed standard would include requirements for qualifying employees to climb ladders on outdoor advertising. Although new to subpart D, the concept of qualified climbers and the training and other administrative controls that characterize the development and protection of these climbers, have existed for many years. OSHA anticipates few if any technological hurdles for industry to implement the proposed provisions for qualified climbers.

Hazard Assessment and Training

Proposed § 1910.30 introduces requirements specifying that employees be trained by a qualified person and that the training prepare employees to recognize hazards created by the work environment and equipment. As discussed above in the training section of this preamble (§ 1910.30), this training requirement would apply only to personal fall protection equipment and dockboards. Employees must be retrained when changes occur in the workplace or in the types of fall protection systems or equipment used, they exhibit an absence of understanding and skill needed to recognize fall-related hazards, or other circumstances indicate that employee safety may be in jeopardy.

The proposed revision to subpart I would introduce a requirement that employers conduct hazard assessment and training in accordance with the requirements in § 1910.132(d) and (f) in workplaces where fall protection PPE would be provided to employees. Survey data indicate that a significant percentage of employers currently assess the occupational fall hazards facing their employees, and that a similarly large percentage of employers train their employees in the proper use of fall protection PPE (OSHA, 1994). For employers that would incur the administrative burden of this proposed requirement for the first time after OSHA issues the final rule, OSHA anticipates that there would be no technological difficulties to achieve compliance.

The revised subpart D standards include provisions for personal fall protection systems, including components such as harnesses, connectors, lifelines, lanyards, anchorages, and travel restraint lines. The criteria that these components must meet when they are used are included in proposed 29 CFR part 1910, § 1910.140 of subpart I, and are referenced in revised subpart D.

The revisions to the walking-working surfaces and fall protection systems described in this proposal include revisions to several subparts in 29 CFR part 1910 other than subparts D and I. For purposes of this analysis, the determinations of technological feasibility described in this PEA include the revisions proposed for these other subparts.

The requirements applicable to personal fall protection systems specified by this proposed rulemaking codify basic safety criteria for these systems. These criteria reflect common industry safety practices, and are met by equipment that is currently used and readily available. The revised standards generally do not require changes in current technology or current practices for employers who use standard safety equipment and follow standard safety procedures. The technological feasibility of the proposed requirements has been demonstrated by current manufacturers of fall protection equipment, restraint line systems, and controlled descent devices, and by the application of these technologies in diverse industrial activities and circumstances.

In conclusion, OSHA has determined that the technological demands placed upon employers through compliance with the proposed revisions to subparts D, I, and other affected subparts of part 1910 can be feasibly implemented within the schedule presented in this proposal. Therefore, OSHA anticipates that there would be no technological hindrance to the significant improvement of employee safety on walking and working surfaces resulting from the issuance of this proposal.

F. Costs of Compliance

Introduction

This subsection presents OSHA's preliminary analysis of the compliance costs associated with the proposed standards for walking-working surfaces and fall protection in general industry. This cost analysis begins with a discussion of the assumptions used in the analysis. OSHA's preliminary analysis of compliance costs is largely based on the cost analysis by OSHA's contractor, Eastern Research Group (ERG, 2007, Ex. 6). The discussion focuses on what constitutes the regulatory baseline (*i.e.*, current conditions) from which the costs, impacts, and benefits of the proposed rule are measured. The role of consensus standards and the compliance rates for the existing rule

are also discussed for their impact on the cost analysis (*i.e.*, where codification of existing consensus standards result in no incremental costs for the proposed rule).

Following the discussion of baseline assumptions, the next subsection reviews the proposed rule on a paragraph-by-paragraph basis for those paragraphs that potentially could result in costs to industry. The final subsection examines one-time costs to bring employers into compliance with the proposed rule, as well as the annual costs for training new employees and retraining existing employees. OSHA's cost estimates are presented by affected industry, and by applicable provision. The final subsection concludes with a discussion and tables that summarize the costs for each section of the proposed standard, and aggregates them to estimate total costs.

Cost Assumptions

Baseline From Which Costs Are Estimated

The Office of Management and Budget's guidance on regulatory analysis (OMB, 2003) recommends developing a baseline against which to measure the costs and benefits of a rule. The baseline should be the best assessment of conditions absent the proposed standard, and is frequently assumed to resemble the present. The baseline for this preliminary cost analysis, then, includes compliance rates with existing subpart D and subpart I, as well as with national consensus standards. For a discussion on the theoretical underpinnings for the use of consensus standards as a baseline in OSHA's cost analysis, *see* ERG, 2007 (Ex. 6).

ERG analyzed OSHA inspections for fiscal year 2005 that resulted in a citation (OSHA, 2006a); *see* Table V–15. The first column in the table presents cases where a citation was issued for any reason, and the other columns in the table indicate cases of non-compliance with a section of 29 CFR part 1910, subpart D. Conceivably, the non-compliance rates in Table V–15 may be overstated because there are inspections with no citations that are not included in this estimate.

Based on ERG's analysis, OSHA determined that upper-bound non-compliance rates for floor guarding requirements in proposed § 1910.23 vary by industry. For example, Finance, Insurance, and Real Estate has the lowest non-compliance rate (2.8 percent), while Wholesale Trade has the highest non-compliance rate (13.6 percent). For the requirements for fixed industrial stairs, the non-compliance rates are quite low, ranging from 0 percent (Finance, Insurance, and Real Estate) to 2.7 percent (Wholesale Trade). For the remaining paragraphs (portable wood ladders, portable metal ladders, fixed ladders, scaffolding, and manually propelled mobile ladder stands and scaffolds), non-compliance rates do not exceed 1.2 percent.

Thus, for § 1910.25–.29, the assumption of 100 percent industry compliance may be reasonable.[19] That is, costs are only incurred when the proposed requirements exceed, or would be more costly than, the current requirements. However, where costs might be incurred under more stringent proposed requirements, the upper-bound non-compliance rate for existing requirements (*i.e.*, the rates shown in Table V–15, applied by sector) can be used as an estimate of the proportion of facilities that might incur costs under the proposed rule. Although OSHA and ERG use the term "upper-bound" here for theoretical and modeling purposes, actual non-compliance rates for existing requirements may be higher. OSHA requests comment on rates and levels of non-compliance with respect to current requirements in subpart D.

If meeting an existing requirement would also meet the proposed requirement, no costs were assigned by OSHA to the provision. For example, the existing language for § 1910.27(b)(1)(iii) states that the clear length of a rung or cleat in a fixed ladder shall be a minimum of 16 inches. Proposed § 1910.23(b)(5)(ii) states that fixed ladders used in the telecommunication industry must have a minimum clear step or rung width of 12 inches. A telecommunication ladder that meets existing requirements (16 inches) would also meet the new requirements (a minimum of 12 inches); hence, no costs were assigned to such changes. Later in this cost analysis, a detailed provision-by-provision examination of potential costs will provide further concrete examples of OSHA's application of estimates of current industry compliance/practice.

BILLING CODE 4510–29–P

[19] Theoretically, the baseline assumption should be compliance with the current standards. Costs for all industrial sectors to meet the current standards were considered at the time the current standards were promulgated.

Table V-15
Compliance with Current 29 CFR 1910 Requirements

Sector	Inspections With Citations	Inspections With Subpart D Citations													
		§1910.23		§1910.24		§1910.25		§1910.26		§1910.27		§1910.28		§1910.29	
	Total	Floor Guarding		Fixed Industrial Stairs		Portable Wood Ladders		Portable Metal Ladders		Fixed Ladders		Scaffolding		Manually Propelled Aerial Platforms	
Manufacturing	6,773	732	10.8%	168	2.5%	18	0.3%	23	0.3%	60	0.9%	16	0.2%	19	0.3%
Transportation and Utilities	1,301	115	8.8%	15	1.2%	0	0.0%	7	0.5%	11	0.8%	3	0.2%	5	0.4%
Retail trade	680	58	8.5%	14	2.1%	2	0.3%	6	0.9%	3	0.4%	1	0.1%	2	0.3%
Wholesale trade	670	91	13.6%	18	2.7%	1	0.1%	7	1.0%	8	1.2%	4	0.6%	0	0.0%
Finance, Insurance, and Real Estate	107	3	2.8%	0	0.0%	0	0.0%	2	1.9%	0	0.0%	1	0.9%	0	0.0%
Services	1,938	106	5.5%	19	1.0%	4	0.2%	5	0.3%	10	0.5%	15	0.8%	3	0.2%
All sectors	**11,469**	**1,105**	**9.6%**	**234**	**2.0%**	**25**	**0.2%**	**50**	**0.4%**	**92**	**0.8%**	**40**	**0.3%**	**29**	**0.3%**

Source: ERG, 2007, based on analysis of OSHA's Integrated Management Information System inspection database (OSHA, 2006a).

Compliance Met by Least-Cost Method

Consistent with traditional cost-impact analyses, OSHA assumed that employers will meet a regulatory requirement by choosing the least expensive means to do so. Thus, if the proposed regulation identifies several other means of meeting a requirement along with the current method, the employer would be expected to select the least cost method. Accordingly, if the alternative method specified in the proposed regulation is more expensive than the current method, the employer would be expected to use the current method to meet the requirement. For example, under proposed § 1910.29(b)(1), an employer can meet the duty to have fall protection for an employee on a walking-working surface with an unprotected edge by (1) the use of guard rail systems, safety net systems, or personal fall arrest systems, or (2) having the employee work in a designated area. The current standard only specifies option (1). Therefore, OSHA assigned no costs to proposed § 1910.29(b)(1).

In some cases there might be cost savings to an employer in choosing the least-cost method for complying with a provision in the proposed rule. However, those savings are not estimated in this report.

Compliance With National Consensus Standards

National consensus standards serve as the "baseline" against which incremental costs and benefits of a proposed standard are measured. If the proposed language requires a level of safety equivalent to that in an existing consensus standard, then there is no difference between the proposed regulatory language and the baseline, except that the proposed standard would be mandatory rather than voluntary. Thus, the costs are those associated with the change from a voluntary standard to a mandatory standard. These costs would be incurred only by that part of the population that currently does not comply with voluntary standards. If, however, the proposed standard is more stringent than the consensus standard, all employers would incur compliance costs solely attributable to the proposed OSHA standard.

ERG developed a logic-flow diagram outlining the process for identifying costs associated with new regulatory language (*see* ERG, 2007, Ex. 6, Figure 3–2). The starting point is a side-by-side, provision-by-provision comparison of the existing and new regulatory language. In many cases, the language might have changed to enhance comprehension of the regulation without changing in the scope of activities covered or the requirements for a safe workplace. In some cases, the revised language gives the employer alternative methods of compliance that provide protection for employees that is equivalent to the original standard, and which result in *de minimis* costs to the employer.

If there is a change from the existing to the proposed standard, the second decision point is to determine whether the proposed standard is equivalent to an existing consensus standard. If it is, then the cost associated with the new standard is the change from a voluntary standard to a mandatory standard. Table V–16 presents a listing of national consensus standards and the associated section of the proposed rule for subparts D and I. If the proposed rule does not contain more stringent requirements than an existing national consensus standard, and equipment purchased or installed meets these standards, no costs were assigned to the proposed rule. However, for the portion of the industry that is not currently complying with the voluntary standard, costs represent compliance with the proposed standards. It can be argued, however, that costs are attributable to the proposed standard only if the employer has the option of not complying with the consensus standard.

At the next decision point, the presence or absence of a "grandfather" provision determines whether costs are incurred by existing establishments to retrofit and upgrade to the new requirements when the standard is implemented or only when establishments replace infrastructure or equipment at a time of the employer's choosing. The cost effects of grandfather provisions are discussed in more detail below and in ERG (ERG, 2007, Ex. 6).

TABLE V–16—PROPOSED SUBPART D REQUIREMENTS AND ASSOCIATED NATIONAL CONSENSUS STANDARDS

Subpart D	National consensus standard
§ 1910.22 General Requirements	ANSI/ASSE A1264.2–2006, American National Standard for the Provision of Slip Resistance on Walking/Working Surfaces.
	ASME B56.1–2004, American Society of Mechanical Engineers, Safety Standard for Low Lift and High Lift Trucks.
§ 1910.23 Ladders	ANSI A14.1–2000, American National Standard for Ladders—Wood Safety Requirements.
	ANSI 14.2–2000, American National Standard for Ladders—Portable Metal—Safety Requirements.
	ANSI A14.3–2002, American National Standard for Ladders—Fixed—Safety Requirements.
	ANSI A14.4–2002, American National Standard Safety Requirements for Job-Made Wooden Ladders.
	ANSI A14.5–2000, American National Standard for Ladders—Portable Reinforced Plastic—Safety Requirements.
	ANSI A14.7–2006, American National Standard for Mobile Ladder Stands and Mobile Ladder Stand Platforms.
§ 1910.24 Step Bolts and Manhole Steps.	ASTM C478–07, American Society for Testing and Materials Standard Specification for Precast Reinforced Concrete Manhole Sections.
	ASTM A394–05, American Society for Testing and Materials Specification for Steel Transmission Tower Bolts, Zinc-Coated and Bare.
	ASTM C497–05, American Society for Testing and Materials Test Methods for Concrete Pipe, Manhole Sections, or Tile.
	IEEE[20] 1307–2004, IEEE Standard for Fall Protection for Utility Work.
	TIA[21] –222–G–2005, Structural Standard for Antenna Supporting Structures and Antennas.
§ 1910.25 Stairways	ANSI A1264.1–1995 (R2002), American National Standard for Safety Requirements for Workplace Floor and Wall Openings, Stairs and Railing Systems.
	ANSI A1264.1–2007, American National Standard Safety Requirements for Workplace Walking/Working Surfaces and Their Access; Workplace, Floor, Wall and Floor Openings; Stairs and Guardrail Systems.

[20] IEEE: Institute of Electrical and Electronics Engineers.

[21] TIA: Telecommunications Industry Association.

TABLE V–16—PROPOSED SUBPART D REQUIREMENTS AND ASSOCIATED NATIONAL CONSENSUS STANDARDS—Continued

Subpart D	National consensus standard
	NFPA 101–2006, National Fire Protection Association Life Safety Code.
	ICC–2003, International Code Council International Building Code.
§ 1910.26 Dockboards (Bridge Plates).	ASME B56.1–2004, American Society of Mechanical Engineers, Safety Standard for Low Lift and High Lift Trucks.
	ANSI/MH30.1–2000, American National Standard For the Safety Performance, and Testing of Dock Leveling Devices Specification.
	ANSI/MH30.2–2005, Portable Dock Loading Devices: Safety, Performance, and Testing.
§ 1910.27 Scaffolds and Rope Descent Systems.	ANSI/IWCA I–14.1–2001, Window Cleaning Safety.
	ANSI/ASCE 7–2005, American National Standard for Minimum Design Loads for Buildings and Other Structures.
	ANSI A1264.1–1995 (R2002), American National Standard for Safety Requirements for Workplace Floor and Wall Openings, Stairs and Railing Systems.
	ANSI A1264.1–2007, American National Standard Safety Requirements for Workplace Walking/Working Surfaces and Their Access; Workplace, Floor, Wall and Floor Openings; Stairs and Guardrail Systems.
§ 1910.28 Duty to have Fall Protection.	ANSI A10.11–1989 (R1998), American National Standard for Construction and Demolition Operations—Personnel and Debris Nets.
§ 1910.29 Fall Protection Systems Criteria and Practices.	ANSI A14.3–2002, American National Standard for Ladders—Fixed—Safety Requirements.
	ANSI A14.7–2006, American National Standard for Mobile Ladder Stands and Mobile Ladder Stand Platforms.
§ 1910.30 Training Requirements	ANSI A1264.1–1995 (R2002), American National Standard for Safety Requirements for Workplace Floor and Wall Openings, Stairs and Railing Systems.
	ANSI A1264.1–2007, American National Standard, Safety Requirements for Workplace Walking/Working Surfaces and Their Access; Workplace, Floor, Wall and Floor Openings; Stairs and Guardrail Systems.
	ANSI/IWCA I–14.1–2001, Window Cleaning Safety.
	ANSI Z359.0–2007, American National Standard, Definitions and Nomenclature Used for Fall Protection and Fall Arrest.
	ANSI Z359.4–2007, American National Standard, Safety Requirements for Personal Fall Arrest Systems, Subsystems and Components.
	ANSI Z359.3–2007, American National Standard, Minimum Requirements for a Comprehensive Managed Fall Protection Program.
	ANSI Z359.3–2007, American National Standard, Safety Requirements for Positioning and Travel Restraint Systems.
	ANSI Z359.4–2007, American National Standard, Safety Requirements for Assisted-Rescue and Self-Rescue Systems, Subsystems and Components.

Source: U.S. Dept. of Labor, OSHA, Directorate of Standards and Guidance, 2009.

Some equipment addressed by the proposed standard, such as portable ladders or mobile ladder stands, is commercially produced and purchased in ready-to-use conditions by employers. OSHA believes that such equipment, in virtually all cases, will be designed and fabricated to meet current consensus standards because equipment manufacturers will seek to avoid: (1) The small market represented by employers that would purchase non-compliant equipment, and (2) the liabilities associated with the manufacture of non-compliant equipment.

Typically, an employer would use architects, engineers, and/or contractors to design, fabricate and install certain types of site-specific equipment. While it is conceivable that an employer might insist on installing nonconforming equipment, OSHA believes that professional standards for architects and engineers, local building codes, and potential liability concerns would dictate that virtually all employers would voluntarily choose to upgrade equipment to conform to existing national consensus standards. For these reasons, OSHA concludes that compliant equipment will be available for the proposed requirements. For example, proposed § 1910.23(b)(1) specifies that ladder rungs and steps must be parallel, level, and uniformly spaced when the ladder is in a position for use. While steps are covered in the existing § 1910.25(c)(2)(i)(b), rungs are not. However, both rungs and steps are covered in the national consensus standards (*see* Table V–16).

Likewise, the spacing for rungs, cleats, and steps of step stools and extension trestle ladders in proposed § 1910.23(b)(3) and (4) are new with respect to the existing standard, but not with the consensus standard for ladders. Proposed § 1910.23(e)(5) requires that grab bars on fixed ladders extend 42 inches above the access/egress level or landing platform served by the ladder. This provision is found in the ANSI 14.3–2002 standard for fixed ladders. Therefore, no costs were assigned to proposed § 1910.23(e)(5).

In conclusion, for the purpose of establishing a baseline, OSHA assumed that equipment met the national consensus standard in effect at the time of installation. For additional analysis of the interface of national consensus standards with OSHA standards, *see* ERG, 2007, pp. 3–6 and 3–14 (Ex. 6).

No Costs Due to Grandfathering Provision

Table V–17 lists the paragraphs in the proposed standard with new requirements, but which also have a "grandfather" provision for existing conditions. A grandfather provision exempts equipment that currently is in place from requirements that strengthen or upgrade the safety features of the equipment. Due to this provision, no costs will be incurred for modification or replacement of equipment covered by these paragraphs.

TABLE V–17—PROPOSED PARAGRAPHS WITH GRANDFATHER PROVISIONS

Paragraph	Subject
§ 1910.23(d)(2)	Fixed ladders must be designed, constructed, and maintained as follows: (i) Fixed ladders must be capable of supporting two live loads of at least 250 pounds each, concentrated between any two consecutive attachments, plus anticipated loads caused by ice buildup, winds, rigging, and impact loads resulting from the use of ladder safety systems * * * (ii) Each step or rung must be capable of supporting at least a single concentrated load of 250 pounds applied in the middle of the step or rung.
§ 1910.24(a)(1)	All step bolts that are used in corrosive environments must be constructed of, or coated with, a material that will retard corrosion of the step or bolt.
§ 1910.24(a)(7)	Each step bolt installed must be capable of supporting, without failure, at least four times its maximum intended load.
§ 1910.24(b)(2)	The employer must ensure that manhole steps: (i) are provided with slip-resistant surfaces such as, corrugated, knurled, or dimpled surfaces; (ii) used in corrosive environment are constructed of, or coated with, a material that will retard corrosion of the step; (iii) have a minimum clear step width of 10 inches; (iv) are spaced uniformly, not more than 16 inches apart; (v) have a minimum perpendicular distance between the centerline of the manhole step to the nearest permanent object in back of the step of at least 4.5 inches; and (vi) are designed to prevent the employee's foot from slipping or sliding off the end of the manhole step.
§ 1910.25(a)(6)	When a door or a gate opens directly on a stairway, a platform must be provided, and the swing of the door or gate must not reduce the effective usable depth to less than 22 inches.
§ 1910.26(b)	Dockboards must be designed, constructed, and maintained to prevent equipment from running off the edge.
§ 1910.29(f)(1)(ii)	The height of stair rail systems must not be less than 36 inches.

Source: ERG, 2007.

Sections of the Proposed Standard With Cost Impacts

This subsection provides a brief paragraph-by-paragraph review of the proposed rule. Only requirements that might involve costs incremental to those associated with current requirements and national consensus standards are described.

Table V–18 summarizes the proposed paragraphs that might result in costs to the employer. These are primarily inspection and training costs. For the purpose of this analysis, OSHA distinguished between informal and formal training (ERG, 2007, Ex. 6). For example, proposed § 1910.23(b)(12) states that an employee must face the ladder when ascending or descending the ladder. OSHA assumed such instruction can be done on an in-house, informal basis (*e.g.,* "on-the-job" training), using materials such as OSHA training videos. When training is done on an informal basis, OSHA did not assign a cost to the training. When the proposed regulatory text uses the words "trained" or "training," OSHA assumed that the instruction will be done on a more formal basis, possibly with an outside person being hired to provide the course. OSHA assumed that an employer will choose to maintain documentation of all formal training and, thus, assigned a cost for the administrative task.

TABLE V–18—PARAGRAPHS OF THE PROPOSED STANDARDS FOR SUBPARTS D AND I ANALYZED FOR COST IMPACTS

Paragraph	Subject
§ 1910.22(d)(1)	Regular and periodic inspection of walking/working surfaces.
§ 1910.22(d)(2)	Unsafe conditions must be guarded until repaired.
§ 1910.22(d)(3)	Qualified person must inspect repair.
§ 1910.23(b)(11)	Training: When ascending or descending a ladder, the user must face the ladder.
§ 1910.23(b)(12)	Training: Each employee must use at least one hand to grasp the ladder when progressing up and down the ladder.
§ 1910.23(b)(13)	Training: An employee must not carry any object or load that could cause the employee to lose his or her balance and fall.
§ 1910.23(c)(5)	Training: Use of portable single rail ladders is prohibited.
§ 1910.23(c)(6)	Training: Ladders must not be moved, shifted, or extended while occupied by employees.
§ 1910.23(e)	Due diligence on the part of the employer to ensure mobile ladder stands and platforms meet the requirements.
§ 1910.23(e)(1)(vii)	Mobile ladder stands and platforms must not be moved.
§ 1910.24(a)(8)	Visual inspection of step bolts before each use.
§ 1910.24(b)(3)	Visual inspection of manhole steps before each use.
§ 1910.24(b)(2)(i)	Manhole steps are provided with slip-resistant surfaces.
§ 1910.24(b)(2)(vi)	Manhole steps are designed to prevent the employee's foot from slipping or sliding off the end of the manhole step.
§ 1910.27(b)(2)(ii)	When rope descent systems are used, employees must be trained in accordance with § 1910.30. Costs for this paragraph are therefore included in § 1910.30.
§ 1910.27(b)(2)(iv)	When rope descent systems are used, employees must use proper rigging, including sound anchorages and tiebacks.
§ 1910.28(a)(2)	Employer must determine that walking-working surfaces have the strength and structural integrity to safely support employees.
§ 1910.28(b)(4)	Installation of guardrails and handrails on dockboards.
§ 1910.28(b)(10)(iii)	Inspection of ladder safety systems.
§ 1910.28(b)(10)(v)	Each employee who routinely climbs fixed ladders must satisfy the criteria for qualified climber found in § 1910.29(h). Costs associated with this training are assigned to § 1910.29(h).

TABLE V–18—PARAGRAPHS OF THE PROPOSED STANDARDS FOR SUBPARTS D AND I ANALYZED FOR COST IMPACTS—Continued

Paragraph	Subject
§ 1910.28(b)(10)(vi)	Training: Employee must have both hands free while ascending or descending ladder (outdoor advertising/billboards operations).
§ 1910.29(b)(15)	Inspection of manila, plastic, or synthetic rope being used as top rails or midrails.
§ 1910.29(h)	Training for qualified climbers.
	Retraining for qualified climbers as necessary.
	Performance observations.
§ 1910.30(a)	Training: Fall hazards.
§ 1910.30(b)	Training: Equipment hazards.
§ 1910.30(c)	Retraining.
§ 1910.140	Hazard assessment.
§ 1910.140(c)(18)	Personal fall protection systems inspected before each use.

Source: ERG, 2007.

Finally, three requirements in the proposed standard specify that training must be done in accordance with proposed § 1910.30:

- Proposed § 1910.27(b)(2)(ii): Rope descent systems;
- Proposed § 1910.28(b)(1): Unprotected sides and edges; and
- Proposed § 1910.28(b)(10)(v): Outdoor advertising (billboards).

The costs for proposed § 1910.30 include the costs for the three paragraphs listed above.

In the following subsection, organized by proposed regulatory provision, OSHA discusses the potential cost implications of the new requirements. Proposed changes expected to result in little or no costs were described in general terms earlier in this cost analysis and are not addressed below. For further details, *see* the ERG report (ERG, 2007, Ex. 6).

General Requirements (§ 1910.22)

§ 1910.22(c). Access and egress. The employer must ensure that employees are provided with and use a safe means of access to, and egress from, one surface to another. The language in the existing § 1910.22(b) specifies that aisles and passageways must be kept clear, in good repair, and with no obstruction across or in aisles that could create a hazard. For this PEA, OSHA interpreted the language in proposed § 1910.22(c) as generalizing the terms "aisles" and "passageways" to cover all means of access and egress. With this interpretation, the terminology in the proposed rule is consistent with that in a National Fire Protection Association consensus standard (NFPA 101). Thus, OSHA assigned no costs to proposed § 1910.22(c).

§ 1910.22(d) Maintenance and repair. This new provision sets forth requirements for the employer to inspect the walking/working surfaces, guard hazardous conditions to prevent employee use until the hazard is corrected, and ensure that the repair or maintenance work is inspected by a qualified person. The costs for these safe work practices are considered below under COST ESTIMATION and are assumed to include the costs for inspection described in proposed § 1910.28.

Ladders (§ 1910.23)

§ 1910.23(a) Application. This proposed paragraph covers special wood ladders specifically excluded in the existing standard, including fruit picker's ladders, combination step and extension ladders, stockroom step ladders, aisle-way step ladders, shelf ladders, and library ladders. However, OSHA assumed that these ladders meet consensus standards for wooden ladders (*see* Table V–16); therefore, OSHA expects that no costs will be incurred with the expanded application.

§ 1910.23(b)(4)(iii). This proposed paragraph concerns rolling ladders in communications centers and was moved from § 1910.268(h)(5)—Telecommunications. Thus, this is not a new requirement and has no costs.

§ 1910.23(b)(9). Both the existing and proposed standards have a requirement to inspect ladders before use. OSHA anticipates that the inspection frequency would not increase under the proposed standard. Therefore, no additional costs are expected.

§ 1910.23(b)(11)–(13); § 1910.23(c)(5) and (6), (10)–(11), and (13). These eight paragraphs include instructions to employees on the proper use of ladders. Proposed § 1910.23(c)(5) prohibits the use of single-rail ladders. This is consistent with the requirements for the construction industry standard at § 1926.1053(b)(19). Thus the requirement not to use a single-rail ladder is a matter of training. The wide availability of permitted ladders means there are no equipment costs associated with the prohibition. Training costs are considered below under COST ESTIMATION.

§ 1910.23(c)(14). This proposed provision states that the reach of the ladder and ladder sections must not be increased by any means unless specifically designed for the application. Ladders and ladder sections cannot be tied or fastened together to provide longer length unless the equipment is designed for this purpose. This provision might cause the employer to incur a cost if it were necessary to purchase a longer ladder of sufficient length for the task. However, the existing regulations at § 1910.25(d)(2)(ix) and § 1910.26(c)(3)(vi) specify that neither wood nor metal portable ladders may be spliced, tied, or fastened together to create a longer section unless the manufacturer has designed the equipment for such a purpose. The proposed standard, then, expands the prohibition to all other means of joining ladder sections. There are no data estimating the frequency of such occurrences but, presumably, they are rare. Thus, OSHA did not assign a cost to this paragraph.

§ 1910.23(d)(2)(i). As proposed, fixed ladders must be capable of supporting two live loads of at least 250 pounds, plus an additional concentrated load of 250 pounds each, plus anticipated loads caused by ice build-up and other conditions. Each rung must be capable of supporting at least a single concentrated load of 250 pounds. The language in this new requirement reflects the consensus standard in ANSI A14.3–2002 (*see* Table V–16). The existing language, however, specifies a single concentrated load of 200 pounds.

ERG estimated that there are approximately 2.75 million fixed ladders over 20 feet in length in the Untied States (ERG, 2007, Ex. 6). The requirement to support two loads of 250 pounds each dates back to the 1984

version of ANSI A14.3. It is therefore highly likely that much of the population of existing fixed ladders was built when the 250-pound requirement was in the voluntary standard. However, we do not know the age distribution of fixed ladders in the United States or when a ladder was most recently reconstructed.

The cost differential for each ladder is the difference between a design to support one live load of 200 pounds and two live loads of 250 pounds each. Given that the fixed ladder must be constructed to fit a specific site, it is likely that the labor costs for either design would be comparable. Therefore, the cost attributable to the consensus standard is primarily attributable to the difference in materials, e.g., thicker steel. Such costs are likely to be highly site-specific and not easily estimated. However, given (1) that the cost for materials is a fraction of the overall cost of building or rebuilding the fixed ladder, and (2) the incremental cost is the difference between the materials planned and materials needed, these incremental costs are likely to be modest and will not impose a significant impact on the small population of employers who are non-compliant with the current consensus standards. OSHA invites public comment on the potential costs and impacts associated with this requirement.

§ 1910.23(d)(12)(i). In the proposed text, "step-across distance" is measured from the centerline of the steps or rungs of a fixed ladder. The existing definition measures the step-across distance from the nearest edge of the ladder to the nearest edge of the structure or equipment. The minimum distance under the proposed standard is 7 inches, and under the existing standard it is 2.5 inches; the proposed maximum distance is 12 inches. Proposed paragraph § 1910.23(b)(4) specifies a minimum clear step or rung width of 11.5 inches for portable ladders and 16 inches for individual rung and fixed ladders; thus, the distance from the centerline to the inside edge of the ladder ranges from roughly 6 to 8 inches. Adding the existing requirement of 2.5 inches from the nearest edge of the ladder to the nearest edge of the structure or equipment to the 6- to 8-inch centerline width results in a step-across width of 8.5 to 10.5 inches. Thus any fixed ladder that meets the current requirements also meets the proposed requirements. No costs were assigned to this paragraph.

§ 1910.23(d)(12)(ii). The proposed standard specifies that the step-across distance from the centerline of the steps or rungs of a fixed ladder to the access/egress point of the platform edge for side step ladders must be between 15 and 20 inches. Based on Figure D–10 in the existing standard, the maximum space from the edge of the ladder to the platform (*i.e.,* access/egress point) is 12 inches. As noted in the previous paragraph, the centerline width for a fixed ladder ranges from roughly 6 to 8 inches. The total step-across distance under the existing standard ranges from 18 to 20 inches. Thus, a fixed ladder that meets the current requirements also meets the proposed requirements. Therefore, OSHA assigned no costs to this paragraph.

§ 1910.23(e). The only provision that does not have a corresponding requirement in the national consensus standard, proposed § 1910.23(e)(1)(vii) (specifying that occupied mobile ladder stands and platforms must not be moved), is a work practice requirement, and compliance is achieved through ladder safety training and enforcement. Therefore, any cost for proposed § 1910.23(e)(1)(vii) would be associated with workplace practices addressed through training. *See* the section COST ESTIMATION, below, for ladder safety training costs.

All other provisions meet the national consensus standard in the ANSI A14 series. An analysis of fiscal year 2005 OSHA inspection data for violations of existing subpart D indicate that the failure to provide safe ladders is low (e.g., 0.2 percent of the violations were for portable wood ladders, 0.4 percent for metal ladders, and 0.8 percent for fixed ladders). Based on these data, OSHA infers that there is a nearly 100 percent compliance with the provisions of the current consensus standards. Therefore, no costs were assigned for equipment upgrades. However, OSHA assigned costs for meeting the technical specifications found in proposed § 1910.23(e).

Step Bolts and Manhole Steps (§ 1910.24)

The requirements for step bolts are new to subpart D. In the preliminary regulatory impact analysis for the 1990 proposed rule, OSHA noted, "Manufactured products, such as ladders, step bolts, manhole steps * * * generally meet or exceed proposed OSHA specifications." (OSHA, 1990a.) A 2003 OSHA interpretation document comments that OSHA believes the IEEE 1307–1996 consensus standard, in most cases, prevents or eliminates serious hazards (OSHA, 2003a). IEEE 1307–1996 defines "failure" in a step bolts as occurring when step bolts are bent greater than 0.26 rad (15 degrees) below the horizontal. Proposed § 1910.24(a)(9) mirrors that definition. Because IEEE revised the standard in 2004, OSHA assumed that industry is using the more up-to-date consensus standard.

§ 1910.24(a)(1). This proposed provision reads:

> All step bolts installed on or after (date 90 days after the effective date of the final rule in the **Federal Register**) that are used in corrosive environments must be constructed of, or coated with, a material that will retard corrosion of the step or bolt.
>
> The national consensus standard applicable to this proposed requirement is ASTM Specification for Steel Transmission Tower Bolts, Zinc-Coated and Bare (ASTM A394–05). The appendix to the consensus standard notes that the dimensions of ladder bolts, step bolts, and equipment support bolts shall be specified by the purchaser. The ASTM standard describes three types of bolts covered by the standard:
>
> • Type 0: hot-dip zinc-coated bolts made of low or medium carbon steel (ASTM 394–05, section 1.1.1).
>
> • Type 1: hot-dip zinc-coated bolts made of medium carbon steel, quenched and tempered (ASTM 394–05, section 1.1.2).
>
> • Type 3: Bare (uncoated), quenched and tempered bolts made of weathering steel (ASTM 394–05, section 1.1.4).[22]

Appendix A.2 of the consensus standard mentions that bolts should be Type 0 unless agreed upon by the manufacturer and purchaser. That is, the default condition is that the bolt be zinc-coated; therefore, such bolts would meet the proposed OSHA requirement for corrosion resistance. Presumably, the use of any other bolt type would suggest that the manufacturer and purchaser have agreed that the bolt is appropriate for the intended environment and intended use. Since manufacturers of step bolts are unlikely to make non-compliant step bolts, OSHA assigned no costs to § 1910.24(a)(1).

§ 1910.24(a)(6). This proposed provision reads:

> Step bolts installed before (date 90 days after the effective date of the final rule in the **Federal Register**) must be capable of supporting their maximum intended load.

The requirement that a step bolt must be capable of supporting its maximum intended load is consistent with IEEE 1307–2004, Standard for Fall Protection for Utility Work. Section 9.1.1.1(d) in that standard reads:

> Step bolts shall [b]e capable of supporting the intended workload [as defined for the application per the applicable ANSI standard(s)], but in no case shall the minimum design live load be less than a simple concentrated load of 271 kg (598.4 lb) applied 51mm (2 inches) from the inside face of the step bolt head.

[22] Type 2 bolts were withdrawn in 2005.

Therefore, no costs were assigned to this provision.

§ 1910.24(a)(7). This proposed paragraph requires that step bolts installed after the effective date of the final rule be capable of supporting four times their maximum intended load. As discussed in the preamble to the proposed rule, OSHA considers a 5/8-inch bolt to meet this requirement, and that bolts of that size are readily available. Therefore, no incremental costs would be expected in relation to this provision.

§ 1910.24(a)(8) and § 1910.24(b)(3). Under these proposed paragraphs, step bolts and manhole steps must be visually inspected before each use. Inspection costs are considered below under COST ESTIMATION.

§ 1910.24(b). The language in the proposal is summarized in Table V–19, along with the corresponding section of ASTM C–478–06b.

There are three additional proposed requirements that exceed what is specified in a national consensus standard for steps in pre-cast concrete manhole sections:

- Manhole steps must be provided with slip-resistant surfaces such as corrugated, knurled, or dimpled surfaces;
- Manhole steps must be designed to prevent the employee's foot from slipping or sliding off the end of the manhole step; and
- Manhole steps must be replaced if they are bent to such a degree that there is no longer 4 inches of clearance to the wall.

TABLE V–19—MANHOLE STEPS

Provision	Proposed language	ASTM C 478–06b section
§ 1910.24(b)(1)	Manhole steps installed before (date 90 days after the effective date of the final rule in the **Federal Register**) must be capable of supporting their maximum intended load.	
§ 1910.24(b)(2)	The employer must ensure that manhole steps installed on or after (date 90 days after the effective rule in the **Federal Register**):	
§ 1910.24(b)(2)(i)	Are provided with slip-resistant surfaces such as, corrugated, knurled, or dimpled surfaces;	
§ 1910.24(b)(2)(ii)	Used in corrosive environments are constructed of, or coated with, a material that will retard corrosion of the step;	
§ 1910.24(b)(2)(iii)	Have a minimum clear step width of 10 inches (25 cm);	16.5.2
§ 1910.24(b)(2)(iv)	Are spaced uniformly, not more than 16 inches apart. The spacing from the entry and exit surface to the first manhole step may be different from the spacing between other steps;	16.4.1
§ 1910.24(b)(2)(v)	Have a minimum perpendicular distance between the centerline of the manhole step to the nearest permanent object in back of the step of at least 4.5 inches (11.4 cm); and	[23] 16.5.3
§ 1910.24(b)(2)(vi)	Are designed to prevent the employee's foot from slipping or sliding off the end of the manhole step.	
§ 1910.24(b)(3)	Manhole steps must be visually inspected before each use and be maintained in accordance with § 1910.22.	

Source: ERG, 2007.

ASTM C478–06b permits the use of uncoated or untreated ferrous steps as long as they are at least 1 inch in cross section, but is silent with regard to a slip-resistant surface or design. Because the proposed requirements appear to exceed those in a consensus standard, when a manhole section needs to be built or replaced, there would be incremental costs for slip-resistant/corrosion-resistant surfaces. Moreover, the proposed paragraph defines when a step has "failed" when still present in the manhole; thus there would also be step replacement costs. These costs are discussed further in the subsection below, COST ESTIMATION.

Stairs and Stairways (§ 1910.25)

§ 1910.25(a)(6). The existing standard says that for doors or gates that open directly onto a stairway, a platform must be provided, and the swing of the door must not reduce the effective width to less than 20 inches. In the proposed standard, platforms installed before 90 days after the effective date of the final rule need only comply with the existing requirements; therefore, there are no retrofit costs. For platforms installed on or after 90 days after the effective date of the final rule, the effective width is increased to 22 inches.[24] The incremental cost is that associated with adding 2 inches in clearance to the platform whenever the platform is replaced. This is likely to be a minimal increase in materials cost borne by the employer to meet the clearance specification. For the reasons given above under the subsection titled Compliance with National Consensus Standards, no incremental costs for meeting a consensus standard are attributable to the proposed OSHA standard.

§ 1910.25(c). Existing § 1910.25(b) does not permit spiral stairways except under special conditions. Spiral stairs would now be permitted under proposed § 1910.25(c). An existing spiral staircase that does not meet the proposed requirements would need to be modified or replaced. However, spiral staircases are likely to be relatively rare given that they are exceptions to the existing rule. Thus, OSHA did not assign costs to proposed § 1910.25(c).

§ 1910.25(d). This proposed paragraph is a response from OSHA to an OMB-initiated, government-wide effort to reform regulation in the U.S. manufacturing sector. The Copper and Brass Fabricators Council submitted a comment indicating that OSHA required the use of fixed stairs when ship stairs would be safer (OMB, 2005). Proposed § 1910.25(d) addresses that comment.

Ship stairs typically are installed with slopes of 50 degrees or greater; however, the existing standard for fixed stairs addressed stairs installed at angles between 30 and 50 degrees. Thus, ship stairs were not specifically addressed in the existing standard. Recently, OSHA has interpreted the standard in such a way that if an inspection found a set of ship stairs at an establishment (a violation of the existing standard) that

[23] ASTM C478–06b Section 16.5.3 specifies that the rung or cleat shall project a uniform clear distance of 4 inches minimum from the wall, to the embedment side of the rung. The proposed OSHA distance is measured from the centerline of the manhole step. Thus, if a step is at least an inch wide, a step that meets the ASTM 4-inch requirement would also meet the OSHA 4.5-inch requirement.

[24] The 22-inch clearance requirement for new structures matches ANSI A1264, Section 6.11.

conformed to the 1990 proposed standard for subpart D, OSHA would consider it a *de minimus* violation [25] (OSHA 2006b and 2006c). Therefore, the need to retrofit or replace a set of ship stairs under the proposed rule would be minimal; for that reason, OSHA assigned no costs to proposed § 1910.25(d).

§ 1910.25(e). Alternating tread stairs were not specifically mentioned in the existing standard. A letter from OSHA to a manufacturer of alternating tread stairs judged the stair design to be safe (OSHA, 1981). Alternating tread stairs are discussed in NFPA 101, section 7.2.11 (NFPA, 2006). Any alternating tread stair that meets the requirements of NFPA 101 also meets the requirements in proposed § 1910.25(e). Thus, there are no costs assigned to this provision.

Dockboards—Bridge Plates (§ 1910.26)

§ 1910.26(b). The proposed text for this provision reads:

> Dockboards put into service on or after [date 90 days after the effective date of the final rule in the **Federal Register**] must be designed, constructed, and maintained to prevent equipment from running off the edge.

§ 1910.26(e). The proposed text for this provision reads:

> Portable dockboards must be equipped with handholds or other means to permit safe handling.

The definition of a dockboard in ANSI MH30.2–2005, section 2.2, contains the language "as well as providing a run-off guard, or curb." OSHA believes that dockboards that are currently being manufactured conform to the ANSI standard. Therefore, the commercial dockboards likely come equipped with handholds, required in proposed § 1910.26(e). Therefore, OSHA believes that any costs associated with this provision would be minimal.

Scaffolds and Rope Descent Systems (§ 1910.27)

§ 1910.27(a). This proposed paragraph extends the construction industry requirements for scaffolds (except rope descent systems) to all other parts of industry. The construction industry scaffold standards (subpart L of 29 CFR part 1926) were updated on August 30, 1996 (OSHA, 1996), and contain requirements for all scaffolds that are now regulated by the general industry standards. OSHA believes that many general industry employers who use scaffolds also perform work covered by the construction industry standards and are already familiar with, and in compliance with, the construction industry scaffold standards. Therefore, the proposed requirements resolve any inconsistencies and, thus, no costs are attributed to this paragraph.

§ 1910.27(b)(1). Rope descent systems (also known as controlled descent devices) are an alternative to powered platforms. The proposed rule states that rope descent systems cannot be used for heights greater than 300 feet unless access cannot otherwise be obtained safely and practicably. The wording of the proposed rule is consistent with the industry consensus standard, ANSI/IWCA I–14.1, 2001. In other words, both the IWCA consensus standard and the proposed OSHA standard (1) prohibit the use of rope descent systems for descents exceeding 300 feet, and (2) contain an exclusion clause–*i.e.,* unless access cannot safely and practicably be obtained by other means. Because both contain the same exclusion clause, the OSHA requirement is no more restrictive than the consensus standard. Since this is a work-practice as opposed to an equipment specification requirement, incremental costs are attributable to the proposed standard to the extent that employers would not otherwise voluntarily comply with the IWCA standard.

The potential cost is, at most, limited to situations where (1) the building is 300 feet tall or higher, and (2) there is an alternative to the rope descent system that is practicable and safe. ERG examined a database developed by the Council on Tall Buildings and Urban Habitat, and identified slightly more than 1,900 buildings that are 300 feet (91.7 m) tall or higher (CTBUH, 2006). More than one in every four of these buildings is in New York City where State law does not allow the use of rope descent systems (DiChacho, 2006). Therefore, according to ERG, a better estimate of the number of potentially affected buildings is 1,500 buildings nationwide (ERG, 2007). OSHA presumes that some of these 1,500 buildings have permanently installed power platforms for access to the exterior of the building, and further presumes that using an existing system would be less expensive than setting up a rope descent system.

The final set of buildings for which proposed § 1910.27(b)(1) could result in costs are those where a safe and practicable alternative to a rope descent system exists but cannot be used due to technical factors specific to a building's history, architecture, or style of operation. For example, to regularly wash the windows of a tall building with many sharp angles or tiered levels, management may have found it cost-effective to contract for the use of rope descent systems rather than use powered platforms. Because all companies bidding on the project would be making those bids under the same set of constraints, proposed § 1910.27(b)(1) would not result in a loss in income to the window cleaning industry. There may be higher costs to the building owners but, although the cost cannot be estimated, OSHA considers the cost to be small given the limited number of buildings that potentially would be affected. OSHA requests information on the potential costs that building owners will incur to provide safe and practicable alternatives to rope descent systems.

§ 1910.27(b)(2)(ii). This proposed paragraph codifies safety provisions presented in the 1991 memorandum to OSHA's Regional Administrators, which are similar to what is now contained in the national consensus standard, ANSI/IWCA I–14.1 (OSHA, 1991b).

These safety provisions are:

- Training employees in the use of the equipment before it is used.
- Inspection of the equipment each day before use.
- Proper rigging, including sound anchorages and tiebacks, in all cases, with particular emphasis on providing tiebacks when counterweights, cornice hooks, or similar non-permanent anchorage systems are used.
- Use of a separate personal fall arrest system.
- All lines installed using knots, swages, or eye splices when rigging descent control devices shall be capable of sustaining a minimum tensile load of 5,000 pounds.
- Provisions are made for prompt rescue of employees.
- Ropes are effectively padded where they contact edges of the building, anchorage, obstructions, or other surfaces that might cut or weaken the rope.
- Provide for stabilization at the specific work location when descents are greater than 130 feet.

Some of the language in the OSHA 1991 memo has been updated for the proposed revision to the standard for subpart D, but most of these text changes (e.g., "prompt rescue" rather than "rescue" and "harness" rather than "body belt") are not anticipated to result in compliance costs. The exceptions are proposed § 1910.27(b)(2)(ii) and § 1910.27(b)(2)(iv). Proposed paragraph § 1910.27(b)(2)(ii) specifies that training must now be done in accordance with § 1910.30. OSHA presumes that costs for any training beyond what was done as a result of the 1991 memorandum

[25] See OSHA's Field Operation Manual: *https://www.osha.gov/OshDoc/Directive_pdf/CPL_02-00-148.pdf.*

would be attributed to proposed § 1910.30. Those costs are discussed below. Costs associated with proposed § 1910.27(b)(2)(iv) are described immediately below.

§ 1910.27(b)(2)(iv). When rope descent systems are used, the proposal requires employers to use proper rigging, including sound anchorages and tiebacks with particular emphasis on providing tiebacks when counterweights, cornice hooks, or similar non-permanent anchorages are used. It is apparent that IWCA expects to find buildings without anchorages. A key provision of ANSI/IWCA I–14.1 is a written work plan (section 1.7), and the IWCA Web site recommends that the person "whose job it is to look at and price jobs should be the primary person to develop the written plan." IWCA states further, that "this is the time when you *see* things like anchor points (or lack thereof), entrance ways, sharp edges, and other concerns. The best part of the written plan is the fact that it allows the building owner or manager to work with you in creating a safe place to work for you and your employees." (IWCA, 2007b) ANSI/IWCA I–14.1, section 17 lists options for roof support equipment, including:

- Parapets, cornices, and building anchorages (section 17.1).
- Davits and davit fixtures (a crane-like structure, section 17.2).
- Sockets (section 17.3).
- Tie-backs (section 17.4).
- Counterweighted outriggers (section 17.5).
- Parapet clamps and cornice hooks (section 17.6).
- Overhead monorail tracks and trolleys (section 17.7).

Several of these options, such as counterweighted outriggers, are transportable and are likely to be supplied by the contractor. Thus, the work plan delineates how the work is to be performed using a mix of contractor and property owner equipment. The voluntary standard provides several acceptable options for roof support equipment, and specifies the development of a work plan where both the contractor and property owner concur on how a safe job can be done at that property. OSHA believes that voluntary compliance with the consensus standard is likely to be high. Therefore, for this proposed provision, no costs were assigned for equipment.

Costs do result, however, from inspections and certification for providing assurances that an anchorage is sound. These costs are discussed below in the subsection titled COST ESTIMATION.

§ 1910.27(b)(2)(x). The proposed requirement to secure equipment is consistent with the consensus standard IWCA I–14.1–2001, section 3.10. Thus, no incremental costs are incurred for this proposed requirement.

§ 1910.27(b)(2)(xi). The proposed requirement to protect suspension ropes from exposure to open flames, hot work, corrosive chemicals, or other destructive conditions is an extension of the requirement to protect the integrity of the ropes specified in the 1991 OSHA memorandum. The costs for meeting this requirement are part of the training costs estimated in proposed § 1910.30.

Duty To Have Fall Protection (§ 1910.28)

The proposed regulatory text for § 1910.28 is a consolidation of the fall protection requirements in the existing rule, with two major revisions. First, comments submitted in response to the reopening of the rule in 2003 suggested that the fall protection requirements in subpart D should be consistent with those in subpart M of the construction standard. The proposed text for § 1910.28 brings consistency between the rules that might affect employers and employees in both the construction and general industry sectors. Second, the existing standard does not address the use of restraint systems, designated areas, or safety nets systems, nor is it clear as to where the use of personal fall protection systems is permitted. In contrast, the proposed standard allows employers to choose from various options in providing fall protection, that is, it is not as restrictive as the existing standard that primarily requires the use of standard railings (guardrails).

§ 1910.28(a)(2)—General. In the proposal, the employer must determine that the walking-working surface has the strength and structural integrity to safely support employees. In interpreting this proposed requirement to analyze costs, OSHA believes that this requirement can be met by a five- to ten-minute inspection of the surface or review of engineering paperwork. In rare circumstances, an employer might need to spend 15 to 30 minutes to determine if the work can proceed. Costs for this proposed provision are discussed later in this subsection where the duty to inspect is considered as part of the general requirement for an employer to periodically and regularly inspect walking/working surfaces in proposed § 1910.22(d). OSHA requests public comment on the expenses that employers typically would incur to comply with this requirement.

§ 1910.28(b)(1)—Unprotected sides and edges. Under the proposed rule, if a walking-working surface (vertical and horizontal) has an unprotected side or edge that is four feet or more above a lower level, an employee must be protected from falling by the use of guardrail systems, safety net systems, personal fall arrest systems, or the employee must work in a designated area. In the existing rule, the trigger height of four feet is found in:

- § 1910.23(b): every wall opening;
- § 1910.23(c)(1): every open-sided floor or platform; and
- § 1910.23(c)(2): the open sides of any runway.

Thus, there is no change in the height requirement for fall protection between the existing rule and the proposed revision. OSHA believes that the language and organization for the proposed rule is less complex than that for the existing rule, and, furthermore, the proposed rule provides additional flexibility in the methods used for fall protection, and allows for exceptional conditions. For example, if it is not feasible to install guardrails on the working surface, guardrails are not required provided that access to the working surface is limited to authorized employees. For these reasons, OSHA did not assign costs to this paragraph.

Section 1910.28(b)(2)—Hoist areas. The proposed rule states that fall protection must be provided in hoist areas where the potential fall distance is four feet or greater. OSHA intends for this revised text to clarify the existing requirements for hoist areas found in proposed § 1910.23(b)(1) and § 1910.23(c)(1). Therefore, no costs were assigned to this paragraph.

Section 1910.28(b)(3)—Holes. The existing rule requires guarding for every hole and skylight floor opening. The proposed rule specifies that fall protection is needed when an employee might fall more than four feet. Thus, the new language harmonizes the proposed requirement for fall protection for holes with the proposed requirements for unprotected sides and edges, as well as hoist areas. The new language also permits the requirement to be met by personal fall arrest systems and covers, as well as guardrails. No costs are assigned to this paragraph.

Section 1910.28(b)(4)—Dockboards (bridge plates). This new requirement for guardrails or handrails on dockboards would protect an employee from falls of four or more feet. There is an exception for cases where the dockboards are used exclusively for material handling operations performed with motorized equipment. In these cases, neither guardrails nor handrails are required if the fall hazard is 10 feet or less and the employee has been trained according to proposed § 1910.30.

The costs for installing handrail or guardrail systems for dockboards are discussed later in this subsection. OSHA assigned training costs to proposed § 1910.30.

Section 1910.28(b)(6)—Dangerous equipment. The existing language requires a standard railing and toe board for walking-working surfaces above dangerous equipment. The proposed rule introduces a distinction among required controls according to the potential fall distance. For potential falls of less than four feet onto or into dangerous equipment, the employer has the additional options of covering or guarding the dangerous equipment to eliminate the hazard. For potential falls of four feet or more, the employer has the options of guardrail systems, restraint systems, personal fall arrest systems, or safety net systems. OSHA assumes employers already have implemented controls under the current standard using the least-cost method; therefore, no costs were assigned to this paragraph.

Section 1910.28(b)(7)—Wall openings. For wall openings, the proposed standard limits the need for fall protection to cases where the inside bottom edge of the wall opening is less than 39 inches above the walking-working surface. The employer has the additional options of a safety net system or personal fall arrest system to meet this proposed requirement. OSHA believes that, currently, protection of wall openings is widespread throughout industry. Therefore, no costs were assigned to this paragraph.

Section 1910.28(b)(8)—Repair, service, and assembly pits (pits) less than 10 feet in depth. Pits, in general, were subsumed within the definition of a floor opening in the existing § 1910.21(a)(2). In the proposed standard, pits between 4 feet and 10 feet in depth used for repair, service, and assembly operations need not have a fall protection system provided that a (minimum) 6-foot perimeter is marked around the pit and access to that area is limited to trained and authorized employees. OSHA did not assign incremental costs to this proposed paragraph for two reasons. First, an employer would only incur costs for caution signs and floor markings if they were less expensive than the fall protection system required under the existing regulation. Second, existing § 1910.145 already requires an employer to post caution signs where needed, and existing § 1910.144 describes what is required for marking the signs. OSHA assumed an employer has signs and marking materials available, so no incremental costs are assigned to this paragraph.

The proposed rule for this working surface provides more than one method to comply with the paragraph. That is, an employee may be protected by a conventional fall protection system or by implementing specific safe work practices. Where the alternative method—the use of safe work practices (marking, posting, and limited access)—is less expensive than the method specified in the existing rule (guardrails), an employer might incur lower costs to comply with the paragraph. OSHA anticipates that some employers may encounter reduced costs (cost savings) through this proposed revision; however, OSHA did not quantify cost savings for this preliminary analysis.

Section 1910.28(b)(9)—Fixed ladders. The existing regulatory text specifies cages or wells as means of providing fall protection for fixed ladders. In the 1990 proposal for subpart D, OSHA would have permitted certain fixed ladders to be climbed without the use of ladder safety devices, cages, or wells if qualified climbers were assigned to the task and certain other conditions were met. In particular, qualified climbers could only be used when the ladder was climbed two or fewer times per year, and it would be a greater hazard to the employee to install the fall protection system than to climb the ladder without fall protection (which OSHA believes rarely occurs). In the proposed standard issued today, the use of qualified climbers as an option is limited to the outdoor advertising/billboard industry (*see* discussion on proposed § 1910.28(b)(10)(v), below). However, in addition to cages and wells, the employer will have the added option of meeting the fall protection requirement for fixed ladders through the use of personal fall protection systems. OSHA believes that qualified climbers are not being used in these situations; therefore, no costs were assigned to this paragraph.

Section 1910.28(b)(10)(i), (ii), and (iv)—Outdoor advertising (billboards). This new paragraph addresses fall hazards on outdoor advertising, also known as billboards. Under the language of the existing subpart D, no distinction is made for billboards. However, for analytical purposes, the fixed ladder portion of the billboard could be considered covered under the existing fixed ladder requirements. Under current § 1910.27(d)(1), cages or wells are required for ladders more than 20 feet in length. Under proposed § 1910.28(b)(10)(i), an employee climbing a fixed ladder portion of a billboard up to 50 feet in length needs either a body belt or body harness with an appropriate 18-inch rest lanyard to tie off to the fixed ladder. Presumably, these additional options, where not already deployed, would be less expensive than cages or wells. Any ladder safety system (*i.e.*, a device other than a cage or well, *see* proposed § 1910.21(b)) that is in current use must be maintained (*see* proposed § 1910.28(b)(10)(iv), a requirement that, according to ERG, is consistent with widespread industry practice (ERG, 2007). Thus, OSHA assigned no incremental compliance costs to these paragraphs.

If, however, the fixed ladder portion extends beyond 50 feet, the entire length of the fixed ladder must have ladder safety systems (*see* proposed § 1910.28(b)(10)(ii). Ladder safety systems refer to any device other than a cage or well. Presumably, because the ladder safety systems are generally less expensive than cages or wells (ERG, 2007), ladder safety systems would have replaced cages or wells where the latter do not already exist or are no longer in good working order. Thus, using these industry retrofit activities as the baseline, no incremental compliance costs were assigned by OSHA to the proposed provision for ladder safety systems.

Section 1910.28(b)(10)(iii) and (vi). Proposed § 1910.28(b)(10)(iii) requires the employer to follow inspection procedures for the safety systems. The frequency of inspection is not specified but ERG assumed that inspections would occur prior to each use. Proposed § 1910.28(b)(10)(vi) specifies that the employee is to have both hands free of tools and material while climbing up or down the ladder. Costs were assigned to these two paragraphs and are discussed later in this subsection under COST ESTIMATION.

§ 1910.28(b)(10)(v). This proposed paragraph effectively requires employees who routinely climb fixed portions of billboard ladders that do not have cages or wells to be "qualified" climbers as specified in proposed § 1910.29(h); therefore, costs for this paragraph are assigned to proposed § 1910.29(h). Because of the uncertainties connected with the concept "routinely," OSHA, to estimate costs for this proposed requirement, conservatively assumed that all employees in NAICS 5418 (Advertising and Related Services) who use personal fall protection are trained as qualified climbers (*see* the discussion for proposed § 1910.29(h) below).

§ 1910.28(b)(10)(vii). Under this proposed provision, climbers must be

protected by an appropriate fall protection system when they reach their work positions. The costs for these systems are already considered in the existing requirements for fixed ladder systems. Thus, no additional costs for equipment are assigned to this provision.

§ 1910.28(b)(12)—Scaffolds and rope descent systems. The proposed standard addressing the duty to provide fall protection for employees on scaffolds now refers to § 1926, the construction standards, thus avoiding any inconsistencies between the general industry and construction standards. The proposed revision extends the requirements found in the construction standards to all other industries. Fall protection on scaffolds in § 1926 generally follows consensus standards; thus OSHA assigned zero costs to this paragraph.

Section 1910.28(b)(13)—Walking-working surfaces not otherwise addressed. OSHA considers this new paragraph to be a clarification of the existing § 1910.23(c)(3), which requires a railing and toeboard. The proposed language restricts the requirement to working surfaces 4 feet or more above a lower level and permits the employer to comply with the paragraph by the use of a personal fall protection system. Under the assumptions that employers choose the least-cost compliance option and that current industry practice is widespread, OSHA expects that there will be few if any costs associated with this paragraph.

Section 1910.28(b)(14)—Protection for floor holes. This paragraph provides protection for stairway floor holes, ladderway floor holes, and hatchway and chute floor holes, and updates § 1910.23(a) in current subpart D by incorporating the best practices found in industry consensus standards (notably ANSI/ASSE A1264.1–2007) and clarifying terminology regarding applicability of the provision (e.g., "infrequently"). Furthermore, proposed § 1910.28(b)(14) mandates that guardrail systems must be constructed in accordance with proposed *§ 1910.29, Fall protection criteria.* Because these requirements have been recognized throughout industry either as part of an OSHA standard or industry consensus standards for at least fifteen years, OSHA believes that the incremental cost burden will be minimal. OSHA requests public input on the cost impacts and benefits of the provisions in proposed paragraph § 1910.28(b).

Fall Protection Systems Criteria and Practices (§ 1910.29)

§ 1910.29(b)(15)—Guardrail systems. This new paragraph requires that manila, plastic, or synthetic rope being used for top rails or midrails be inspected "as frequently as necessary" to ensure that it meets the strength requirements. The inspection costs are considered below in the next subsection, *Cost Estimation*.

§ 1910.29(c)—Safety net systems. The proposed criteria for these systems now refer to § 1926, thus avoiding any inconsistencies between general industry and construction standards, and effectively extending the requirements found in the construction standards to most other industries. Given that safety net system requirements in § 1926 follow consensus standards, OSHA anticipates few, if any, incremental compliance costs connected with this proposed requirement.

§ 1910.29(h)—Qualified climbers. This proposed paragraph sets forth the criteria for the use of "qualified climbers" and limits the use of qualified climbers to employees engaged in billboard operations. The costs for this proposed paragraph are those to train and, as necessary, retrain qualified climbers. That is, OSHA assumed that qualified climbers require training beyond that now required for fixed ladders. Additional costs are incurred through the proposed requirement that the employer observe the performance to ensure the qualified climber has the skills necessary to perform the climb safely. These costs are discussed further in the next subsection, *Cost Estimation*.

With respect to other requirements in proposed § 1910.29, including those found in paragraphs (d) Designated areas, (e) Covers, and (f) Handrail and stair rail systems, OSHA believes that existing industry practice, which includes significant widespread compliance with the proposed requirements, will result in minimal incremental cost burden to employers. OSHA requests comment on the reasonableness of this assumption.

Training Requirements (§ 1910.30)

This new section requires that employees in general industry be trained regarding fall and equipment hazards, as well as re-trained when necessary. OSHA assumed that an employer that trains employees in compliance with § 1910.30 would choose to maintain records of the training, and the cost estimates reflect this time commitment on the part of the employer. The training costs estimated for proposed § 1910.30 encompass requirements from other proposed paragraphs that specify that the training must be done in accordance with proposed § 1910.30 (*see* Table V–18 for examples). These costs are discussed in more detail below and are incurred only by the percentage of establishments that do not already provide regular safety training.

Personal Fall Protection Systems (§ 1910.140)

OSHA is proposing that within subpart I of § 1910, a new section, § 1910.140, be added to address personal fall protection equipment. The proposed text for § 1910.140 adds specific design and performance requirements for personal fall protection systems to the existing regulation. In addition, the proposed standard would require that the provisions for hazard assessment found in existing § 1910.132 apply to personal fall protection systems.

Section 1910.140(c)(18). This proposed paragraph would require that personal fall protection systems be inspected prior to each use. Costs for this requirement are discussed below in the next subsection, *Cost Estimation*.

Section 1910.132(d). This existing provision requires an employer to assess the workplace to identify any potential hazards and the need for PPE. Costs associated with hazard assessment required by this proposal are discussed below under proposed § 1910.140, Personal fall protection systems.

Section 1910.132(f). The revision proposed for this existing paragraph would require that—before using personal fall protection systems, and after any component or system is changed—employees must be trained in the application limits of the equipment, proper hook-up, anchoring and tie-off techniques, methods of use, and proper methods of equipment inspection and storage. The costs for the proposed revision are included in the costs for proposed § 1910.30, and are described in further detail below under COST ESTIMATION.

Cost Estimation

This subsection presents OSHA's detailed estimates of the costs, provision by provision, associated with the proposed rule. These compliance costs represent the incremental burden incurred by employers beyond the current baseline of fall-related safety expenditures. OSHA did not attempt to estimate potential cost savings to industry from increased flexibility in meeting specific requirements, such as the use of personal fall protection

systems rather than the currently mandated hand/guardrail systems, even if some of the new alternatives might actually be safer than the currently mandated requirements.[26]

Estimated Compliance Costs by Provision in the Proposed Standard

Labor costs associated with compliance with the proposed standard are generally characterized as additional employer and supervisor time for training and inspection. The number of establishments and employees are taken from *Statistics of U.S. Businesses: 2006.* The number of employees covered by subpart D and subpart I is based on the share of employees employed in building and grounds; construction;[27] installation, maintenance, and repair; production; and material moving occupations as reported by the Bureau of Labor Statistics, *Occupational Employment Statistics* (BLS, 2008). *See* subsection C above for more industry-profile information.

Employee and supervisor wages (*see* Table V–5) are based on data reported by the Bureau of Labor Statistics through their *Occupational Employment Statistics* program (BLS, 2008). OSHA adjusted wages to include the cost of benefits; estimated benefits were based on data from the Bureau of Labor Statistics, *Employer Costs for Employee Compensation*—June 2008 (released September 2008). Current compliance rates are based on OSHA inspection statistics for Fiscal Year 2005 (*see* Table V–13). The percentage of businesses that already provide regular safety training is based on the *National Occupational Exposure Survey* conducted by the National Institute for Occupational Safety and Health (NIOSH, 1988). *See* Table V–20, below.

TABLE V–20—FRACTION OF BUSINESSES PROVIDING REGULAR SAFETY TRAINING

NAICS	Industry	Fraction providing regular safety training
11	Agriculture, Forestry, Fishing, and Hunting	.796
21	Mining (2111 Oil and Gas Extraction)	.751
22	Utilities	.890
31–33	Manufacturing	.855
42	Wholesale Trade	.668
44–45	Retail Trade	.668
48–49	Transportation	.890
51	Information	.664
52	Finance and Insurance	.664
53	Real Estate	.664
54	Professional, Scientific, and Technical Services	.664
55	Management	.664
56	Administrative and Support, Waste Management and Remediation Services	.664
61	Educational Services	.83
62	Health Care	.957
71	Arts, Entertainment, and Recreation	.664
72	Accommodation and Food Services	.664
81	Other Services	.664

Source: ERG, 2007, based on NIOSH, 1988.

General Requirements (§ 1910.22)

Although the underlying hazard of unsafe walking-working surfaces is addressed within various § 1910 requirements, proposed § 1910.22 contains three paragraphs with new requirements:

- § 1910.22(d)(1): Regular and periodic inspection of walking-working surfaces;
- § 1910.22(d)(2): Unsafe conditions must be guarded until repaired; and
- § 1910.22(d)(3): Qualified person must inspect repair.

For the purpose of estimating costs for § 1910.22(d)(1), ERG assumed that a significant percentage of facilities include regular and periodic inspections of walking-working surfaces as part of the general obligation to provide a safe and healthful workplace. ERG used the non-compliance rates for floor-guarding (§ 1910.23 has the highest non-compliance rates, *see* Table V–13) to estimate the number of establishments that need to perform regular and periodic inspections of walking-working surfaces. ERG assumed that a supervisor would spend 15 minutes every quarter making the inspection for a total of 1 hour per year. Based on these unit costs, OSHA estimates that the total annual inspection cost is $15.3 million.

For estimating the costs of proposed § 1910.22(d)(2), ERG assumed that within a year, ten percent of affected establishments would identify an unsafe condition, and furthermore, that it takes an employee 15 minutes to set up the guard mechanism (*e.g.*, cones, barriers, etc.). Incremental material costs are assumed to be negligible in that it is likely that most employers currently stock guard equipment but only occasionally deploy it. Estimated compliance costs for this proposed provision are $0.2 million.

For proposed § 1910.22(d)(3), ERG assumed that it takes 5 minutes for a supervisor or qualified person to inspect the repair of the unsafe condition. Applying this time unit across all affected employers, OSHA estimates that the costs for a supervisor or qualified person to inspect repairs will total $0.1 million ($107,350).

Summing costs for the three paragraphs in proposed § 1910.22(d) with cost impacts, the total estimated cost for compliance with proposed § 1910.22(d) is, after rounding, $15.7 million per year.

[26] The new alternatives are assumed to be at least as effective in employee protection as that provided by the current requirements.

[27] Production employees include those in building and grounds; construction; installation, maintenance, and repair; production; and material moving occupations. It is conceivable that employees in construction and related occupations, even though not employed by establishments in construction industries, might on occasion perform work that would be regulated by OSHA under its construction standards in § 1926. For the purpose of estimating costs, however, ERG assumed that these are employees are covered by the general industry standard.

Ladders (§ 1910.23)

Eight paragraphs within proposed § 1910.23 would provide new requirements for protecting employees from slip, trip, and fall hazards during operations involving ladders. Table V–21 summarizes these proposed requirements, all of which are assumed by OSHA to be addressed in a single training session. In addition, OSHA anticipates that compliance with this proposed provision can be met by informal training and, thus, no administrative costs are included for an employer.

OSHA's Web site includes a Resource Center with a loan program for training videos (OSHA, 2006d). The index lists ten training videos for ladders and stairways with times ranging from five to 19 minutes, for an average of 12 minutes. For the purposes of estimating costs, ERG applied a 15-minute training period for this cost analysis.

TABLE V–21—TRAINING REQUIREMENTS UNDER PROPOSED § 1920.23

Paragraph	Subject
§ 1910.23(b)(11)	When ascending or descending a ladder, the user must face the ladder.
§ 1910.23(b)(12)	Each employee must use at least one hand to grasp the ladder when progressing up and down the ladder.
§ 1910.23(b)(13)	An employee must not carry any object or load that could cause the employee to lose his or her balance and fall.

TABLE V–21—TRAINING REQUIREMENTS UNDER PROPOSED § 1920.23—Continued

Paragraph	Subject
§ 1910.23(c)(5)	Portable single rail ladders must be rigidly supported when used.
§ 1910.23(c)(6)	Ladders must not be moved, shifted, or extended while occupied by employees.
§ 1910.23(c)(10)	The top of a non-self-supporting ladder must be placed with the two rails supported unless it is equipped with a single support attachment. [New for wood ladders.]
§ 1910.23(c)(11)	When portable ladders are used to gain access to an upper landing surface, the ladder siderails must extend at least 3 feet (0.9 m) above that upper landing surface. [New for metal ladders.]
§ 1910.23(c)(13)	Ladders and ladder sections must not be tied or fastened together to provide longer length unless they are specifically designed for such use. (New for wood ladders.)

Source: ERG, 2007.

In ERG's cost model, ten employees are trained per session with one supervisor in attendance. ERG further assumed that $1 in materials cost is incurred for handouts for each employee trained.

Some establishments already provide regular safety training. OSHA applied an estimate for the percentages of establishments that already provide training from the NIOSH *National Occupational Exposure Survey* (NOES) database (NIOSH, 1988). Although the data are over 20 years old, the NIOSH NOES survey is still the primary source for such information and covers a broad range of industries. The proportion of establishments that already offer regular safety training is likely to have increased in the past two decades; hence, the training costs may be overestimated.

The cost to train all the employees at establishments that do not offer regular safety training is a one-time cost that is annualized over a 10-year period at an interest rate of seven percent. Summing across all affected employers, the total first-year cost is $11.2 million, with an annualized cost of $1.6 million.

New employees that enter the workforce would also need training. For the purpose of estimating the cost of the rule, ERG conservatively assumed that training received at a prior place of employment was not considered sufficient to meet the proposed subpart D requirement for the new employer. Based on ERG's analysis of 2003 turnover data collected by the Bureau of Labor Statistics (ERG, 2007, Ex. 6), OSHA applied 2008 BLS industry turnover rate data to the cost analysis. Table V–22 summarizes the data and the NAICS codes to which they are assigned. OSHA assigned the turnover rate for manufacturing to logging (NAICS 1133), oil and gas extraction (NAICS 2111), and information (NAICS 51). Under these assumptions, the estimated cost is $4.3 million per year to train new employees about ladder safety.

TABLE V–22—INDUSTRY TURNOVER RATES APPLIED IN OSHA'S PRELIMINARY COST ANALYSIS

Industry sector	NAICS codes	Turnover rate [a] (percent)
Manufacturing	1133, 2111, 31–33, 51	24.3
Transportation and Public Utilities	22, 48–49	31.5
Wholesale Trade	42	26.1
Retail Trade	44–45	47.1
Finance, Insurance, and Real Estate	52–53	27.2
Service	54–81	47.2

[a] Hires as a percent of total employment.
Source: U.S. Dept. of Labor, OSHA, Directorate of Evaluation and Analysis, Office of Regulatory Analysis, based on ERG, 2007, and Bureau of Labor Statistics. *Job Openings and Labor Turnover Survey, 2008.*

To estimate the costs for ensuring that mobile ladder stands and mobile ladder stand platforms conform with the applicable ANSI standards (*see* the note to proposed § 1910.23(e)), OSHA's cost formula, adopted from ERG's analysis (ERG, 2007, Ex. 6), includes the 6.74 million establishments covered in subpart D, as presented in the industry profile earlier in this PEA. ERG assumed that a typical lifetime for a ladder is five years; thus, one-fifth of the

establishments would purchase a ladder in any given year. Furthermore, ERG assumed that a supervisor from each establishment would take 5 minutes to read ladder specifications to ensure the ladder about to be purchased meets all ANSI 14 requirements for that type ladder. With these assumptions, the estimated annual cost for proposed § 1910.23(e) is $3.8 million.

Step Bolts and Manhole Steps (§ 1910.24)

Step bolts. ERG identified three general cost categories for the requirements addressing step bolts and pole steps:

- Utility poles.
- Communication structures.
- Sports and performance arenas with pole-mounted lights.

Utility poles. According to the *2007 Utility Data Institute Directory of Electric Power Producers and Distributors,* there are 6,297,596 distribution line miles across the United States (Platts, 2007). Of these, the proposed OSHA rule would concern the overhead (as opposed to underground) line miles. According to ERG, the most recent estimate available for the overhead distribution system is 4.1 million line miles in 1996, about two-thirds of total line miles (NCAMP, 1997). Considering the maturity of the electric power industry in the United States, ERG assumed that there has not been a significant amount of new line miles built in the past decade, and of the new lines miles, there probably has been a trend to build the lines underground. Assuming one utility pole every 100 feet, ERG estimated that there are 216,480,000 utility poles across the United States. According to a recent highway safety study, this estimate is 2.5 times the number of reported utility poles on highways in 1999, and therefore this estimate appears to be reasonable (NCHRP, 2004). Assuming 1 percent of the poles are climbed each year and 1 minute is taken for inspection of the step bolts, the estimated annual cost is $1.5 million.

Communication structures. ERG estimates that there are roughly 190,000 fixed ladder structures in the communications industry (*see* ERG, 2007, Appendix A, Ex. 6). This estimate encompasses communication structures with fixed ladders and step bolts. Fixed ladders, however, have an existing requirement for inspection while step bolts do not. To narrow the estimate to fixed ladders with step bolts, ERG searched an FCC database (Antenna Structure Registration (ASR)) and determined that most communication structures meet at least one of the following criteria:

- Height is 200 feet or greater.
- Height <199 feet if within 5 miles of an airport and fails the glide calculation (part 17 requirement).
- Height of the extension (*e.g.,* beyond the building roof) is 20 feet or more.

ERG assumed that these structures are more likely to have fixed ladders rather than step bolts. As of May 2007, there were approximately 93,000 structures in the ASR database. Communication structures that are not in the ASR database are smaller and, thus, more likely to have step bolts. ERG assumed that the difference between the total number of structures (190,000) and the number in the ASR database (93,000) would represent the number of structures that could potentially have step bolts. ERG assumed that the 97,000 structures with step bolts are climbed once a year and that one minute is spent inspecting the structure before it is climbed. These unit estimates resulted in an annual cost of $0.050 million for NAICS 51 (Information).

Sports and performance arenas. According to a recent census, there are 1,699 promoters of performing arts, sports, and similar events with facilities (Census, 2002). ERG was unable to estimate the number of step bolts at each facility, but assuming that one hour per year is dedicated to inspecting all step bolts at each facility, ERG calculated that annual costs would total $0.034 million for NAICS 7113 (promoters of performing arts, sports, and similar events with facilities).

Summing costs for utility poles, communication structures, and sports and performance arenas, OSHA estimated that the total annual inspection cost for step bolts would be $1.54 million. OSHA requests comment on the extent to which visual inspection of step bolts is currently conducted in the telecommunications and electric utility industries, and in sports and performance arenas. OSHA, in addition, requests comment on the assumptions underlying its analysis of costs, as well as information on the potential impacts of the proposed revision to the requirements to safely climb surfaces with step bolts.

Manhole steps. ERG estimates there are between 6.6 and 13.2 million manholes, with a mid-point estimate of 9.9 million manholes (ERG, 2007, Ex. 6). Of these manholes, approximately 85 percent, or 8.4 million manholes, are 20 feet or less in depth and, therefore, the majority would use steps or portable ladders instead of fixed ladders. By way of simplification, ERG assumed that 10 percent of all manholes 20 feet or less would be entered once a year, on average, and that it would take one minute to inspect the steps prior to entering the manhole. These assumptions resulted in an annual cost of $2.1 million for the industry that would be primarily affected, NAICS 2213 (water, sewage, and other systems).

Other industries also use manholes for access, such as the electric power generation, transmission, and distribution (NAICS 2211) and natural gas distribution (NAICS 2212). ERG, however, had no data on the number of manholes for those industry groups, but OSHA presumes that the costs would be proportional to the number of manholes that are estimated for water and sewage systems. OSHA was not able to estimate costs for NAICS 2211 and 2212, and, therefore, requests public comment on the impact of the requirement for inspecting manhole steps on these and any other affected industries.

The incremental costs for the provision of slip-resistant and corrosion-resistant manhole step surfaces would be incurred in the future as manholes with steps are replaced at the end of their useful life. As described above, there are 9.9 million manholes, of which 85 percent are 20 feet or less in depth and 15 percent are more than 20 feet in depth. The manholes less than 20 feet are assumed to have a uniform distribution in the use of portable ladders, fixed ladders, and steps, resulting in 2.9 million manholes with steps. The manholes 20 feet or more in depth are assumed to have a uniform distribution between fixed ladders and steps, resulting in 0.7 million manholes with steps. Therefore, 3.6 million manholes are considered as the universe affected by the proposed requirement. The most expensive step found has a per-unit cost of $8.50, and it is assumed that this includes a 10 percent premium to ensure the steps meet the proposed requirements (ERG, 2007, Ex. 6).

OSHA estimated annual step replacement costs by assuming that 10 percent of the manholes are entered each year, and of those 10 percent have a failed rung. At the incremental cost of $0.85 each (10 percent of $8.50 per rung), the estimated annual step replacement cost is $0.03 million. Annual manhole replacement costs are estimated assuming 5 percent of manholes need to be replaced a year and that steps are installed every 16 inches. The estimated annual manhole replacement cost is $1.7 million.

Scaffolds and Rope Descent Systems (§ 1910.27)

Training. Cost for any training beyond what is done as a result of the 1991 OSHA memorandum on descent control devices are attributed to proposed § 1910.30 (*see* below).

Sound anchorages. To provide assurances that an anchorage is sound, assigned costs involved: (1) A qualified/competent person who would inspect the rigging and anchorages on buildings annually, and (2) a professional engineer who would certify the soundness of the rigging and anchorages every 10 years.

According to an industry expert contacted by ERG, an estimated 3.0 million window-cleaning descents take place annually at 750,000 buildings (ERG, 2007, Ex. 6). Using data collected by the Department of Energy (DOE) for surveys on energy use, ERG compared this estimate with the number of commercial and residential buildings with four or more floors. The *2003 Commercials Buildings Energy Consumption Survey* identified about 140,000 commercial buildings nationwide (DOE, 2006). The *2001 Residential Energy Consumption Survey* identified about 2.4 million apartment buildings with 5 to 10 floors, 0.9 million apartment buildings with 11 to 20 floors, and an unspecified number of buildings with more than 20 floors (DOE, 2004). Summing the three categories of residential buildings, ERG estimated that there are approximately 3.3 million residential buildings with at least 5 or more floors.

If it is assumed that each commercial building has its windows cleaned annually, that would account for 140,000 of the estimated 750,000 cleanings per year. If the remaining 610,000 cleanings are distributed over the 3.3 million residential buildings, each building would, on average, have its windows cleaned every five to six years.

ERG's industry expert estimated that a minimum of 20 percent of the building owners comply with the inspection standard and that the number is increasing. However, comments submitted to the Agency in response to the 2003 reopening presented a wide range of perspectives on the likelihood that building owners inspect their anchorages on a periodic basis. Amodeo (2003) noted that some clients view ANSI I–14.1 as voluntary and resist having inspections. Kreidenweis (2003) commented that few buildings are inspected by an engineer. In contrast, Lebel (2003) shared the view that many buildings have a roof plan and identified anchorages certified by a professional engineer. Zeolla (2003) stated that most buildings that have invested in anchors are performing the inspections.

If, as estimated by ERG, 75 percent of the approximately 750,000 buildings that are cleaned each year will be affected by the change from a voluntary requirement to a mandatory requirement, then OSHA estimates that 562,500 buildings would require annual inspections and decennial certifications. ERG further assumed that the annual inspections would be performed by a production supervisor ($29.73/hour) and that it would take one hour to perform the inspection. Annual costs for the building inspections would total $16.7 million.

Table V–23 summarizes the range in costs for a professional engineer to certify building anchorages; cost estimates were drawn from comments in the record. The estimates are adjusted to 2003 dollars using as the deflator the *Consumer Price Index—All Urban Consumers* (BLS, 2007). The costs range from a low of $175 to a high of $2,500, and probably represent the range in the size of buildings, complexity of anchorage arrangements, and regional standards. The median value is $1,000.

TABLE V–23—ESTIMATED COST FOR THE CERTIFICATION OF BUILDING ANCHORAGES

Source	Estimated cost			Estimated cost (2003 dollars)	
	Low	High	Year	Low	High
Bright, 2007	$300	$1,500	2006	$274	$1,369
Kreidenweis, 2003	1,000	2,500	2003	1,000	2,500
Lebel, 2003	175	1,000	2003	175	1,000
Wright, 2003	400	.....	2003	400	.....

Source: ERG, 2007.

Assuming, as indicated earlier, that building anchorages would be certified every ten years, OSHA estimates that 56,250 buildings (one-tenth of 562,500 buildings certified annually) would need anchorage certification every year. At an average cost of $1,000 for certification, annual costs for anchorage certification would total $56.3 million.

Summing costs for inspecting and certifying building anchorages, OSHA estimates that annual costs for ensuring that building anchorages are sound, as required by proposed § 1910.27(b)(2)(iv), would total $73.0 million.

Duty To Have Fall Protection (§ 1910.28)

Table V–24 lists the requirements in this proposed section that are likely to create new cost burdens on employers. The following discussion presents, by requirement, the details of OSHA's cost analysis for this section.

General protection. Proposed § 1910.28(a)(2) covers all walking-working surfaces and specifies that walking-working surfaces must have the strength and structural integrity to support employees safely. As discussed earlier in this cost subsection, the proposed general requirements (§ 1910.22) provide for the periodic and regular inspection of walking-working surfaces by employers to ensure that the surfaces are in a safe condition for employees to use. Proposed § 1910.28(a)(2) provides further detail as to what should be considered in the inspection of surfaces. Thus, OSHA believes that the costs for the inspections required by proposed § 1910.28(a)(2), are included in the costs estimated for general inspection in proposed § 1910.22(d), described earlier.

Dockboards (bridge plates). Proposed § 1920.28(b)(4) would require that guardrails or handrails be installed to protect employees on dockboards from falls of four feet or more to a lower level. Employers with dockboards having maximum heights that are less than four feet would not incur costs under this paragraph. Dockboards presenting a fall hazard of four feet up to ten feet are exempted from the hand/guardrail requirement if the ramp is used exclusively for material handling operations with motorized equipment. To qualify for the exception, employees

need to be trained. Training costs for this provision are discussed later in this section.

TABLE V–24—NEW REQUIREMENTS IN § 1910.28, DUTY TO HAVE FALL PROTECTION

Paragraph	Subject
§ 1910.28(a)(2)	Employer must ensure that walking-working surfaces have the strength and structural integrity to safely support employees.
§ 1910.28(b)(4)(i)	Installation of guardrails and handrails on dockboards (bridge plates).
§ 1910.28(b)(4)(ii)	Fall protection training required for dockboards, in accordance with § 1910.30, including proper placement and securing of dockboards, securing of vehicles, and proper use of material handling equipment.
§ 1910.28(b)(10)(iii)	Inspection of safety systems on fixed ladders used in outdoor advertising.
§ 1910.28(b)(10)(v) and (vi)	Employees that routinely climb the fixed ladder portions of a billboard must be a "qualified climber" and must have both hands free of tools or material when ascending or descending a ladder. Costs associated with this training are assigned to proposed § 1910.29(h).

Source: U.S. Dept. of Labor, OSHA, Office of Regulatory Analysis, 2007.

ERG judged that a substantial proportion of dockboards would either not incur costs due to height or be able to use the exception. Thus, OSHA anticipates that any costs incurred under this provision are unlikely to be substantial. OSHA requests comment on the potential impacts associated with the duty to protect employees on dockboards from falls.

Outdoor advertising. Based on discussions with the Outdoor Advertising Association of America, ERG estimated that the number of billboards with fixed ladders over 20 feet is approximately 20,500 (ERG, 2007, Ex. 6). Billboards are climbed anywhere from one to more than 12 times a year, whenever the copy is changed. For the purpose of estimating costs, ERG assumes that billboards are climbed an average of six times a year, totaling 123,000 climbs (20,500 billboards × 6 climbs). Each time a billboard is to be climbed, the employee takes two minutes to inspect the ladder safety system (246,000 minutes or 4,100 hours). Employees who climb billboards are generally found in NAICS 5418 (Advertising and Related Services). In 2008, the average wage including benefits for this category was $21.39/hr. Thus, the estimated cost to comply with the provision for inspection of ladder safety systems on billboards will total approximately $88,000 per year.

As specified in proposed § 1910.28(b)(10)(v) and (vi), employees that routinely climb the fixed ladder portions of a billboard must satisfy the criteria for "qualified climbers" found in proposed § 1910.29(h), must undergo training and demonstrate the capacity to perform the necessary climbs safely, and must have both hands free of tools or material when ascending or descending a ladder. For the purpose of estimating costs, ERG assumed that all employees who climb billboards are "qualified climbers" and that the training for a qualified climber includes the instruction to have both hands free while ascending or descending the ladder (*see* proposed § 1910.29(h)(2)). For this preliminary cost analysis, OSHA assigned the costs to train a qualified climber under proposed paragraphs § 1910.28(b)(10)(v) to § 1910.29(h).

Fall Protection Systems Criteria and Practices (§ 1910.29)

For proposed § 1910.29, two requirements are expected to impose significant new burdens on employers. Below are details of OSHA's approach to estimating costs for this section of the proposed standard.

Inspection of manila, plastic, and synthetic rope. The proposed regulatory text for § 1910.29(b)(15), requiring the inspection of manila, plastic, or synthetic rope being used as rails, specifies that the inspections must be done as frequently as necessary to ensure the strength requirement is met. The estimated inspection cost, then, would be the product of the:

- Number of guardrail systems;
- Proportion that use manila, plastic, or synthetic rope used as toprails or midrails;
- Number of inspections per year;
- Time required for each inspection (hours); and
- Average wage per inspector per industry ($/hr.).

At this time, OSHA lacks data on the proportion of guardrail systems that use manila, plastic, or synthetic rope as top rails or midrails. However, OSHA considers it likely that the inspection of these alternate materials for toprails and siderails would form part of the inspections performed under proposed § 1910.22, the general inspection of walking-working surfaces for safety. That is, proposed § 1910.29(b)(15) provides a detail to be included in the inspection for those workplaces that use manila, plastic, or synthetic rope as top rails or midrails. Therefore, OSHA allocated no additional costs to this provision.

Qualified climbers. Proposed paragraph § 1910.29(h) concerns the outdoor advertising/billboard industry. "Qualified climbers" are an option open only to this industry. Qualified climbers must:

- Have climbing duties as one of their routine work activities (proposed § 1910.29(h)(4));
- Be physically capable of performing the climbing duties (proposed § 1910.29(h)(1));
- Undergo training or an apprenticeship program (proposed § 1910.30(h)(2)); and
- Be retrained as necessary (proposed § 1910.30(h)(2)).

Employers are required to ensure that a qualified climber has the skill to safely perform the climb by using (1) performance observations throughout the training, and either formal classroom or on-the-job training; or (2) performance observations once the climber has had formal classroom training, or ensuring the skill of the qualified climber through on-the-job training. In the second option, the employer does not need to personally observe the climber. In ERG's cost model, a combination of employer performance observation and classroom training—as found in the first option—contributes to the proper preparation of employees.

For the purposes of estimating costs, ERG assumed that 90 percent of the employees in the outdoor advertising industry who climb have been trained as qualified climbers. Thus, there would be one-time costs associated with qualifying the remaining ten percent of climbers. These costs are annualized over ten years at a rate of seven percent. In addition, the industry incurs annual costs for:

- Employer performance observation;
- Training of new employees;

• Retraining of employees as necessary; and

• Administrative costs to document training and re-training.

For the purpose of estimating one-time costs, ERG estimated that ten percent of the total number of employees who perform construction, installation, maintenance, and repair operations in NAICS 5418 (advertising and related services) (or 713 out of 7,132 employees) would need to undergo training to be qualified climbers.

The National Association of Tower Erectors has developed a climber training standard with varying levels of expertise (authorized, competent, and competent rescuer), but does not offer training itself (NATE, 2006). The OSHA Web site lists a 4-day training session in fall arrest systems for $750. Commercial courses in fall protection searched on the Web range from one to five days with costs ranging from $500 to $2,500 per course (ERG, 2007, Ex. 6). The prices include materials and the trainer's time. For the purposes of estimating costs, ERG assumed that the requirements in the proposed standard could be met by a 4-day training course, at a cost of $1,500 plus the employee's time ($684, based on an average wage of $21.39/hr and 32 hours), for a total of $2,184. Furthermore, administrative tasks to document the training are assumed to be 15 minutes of a supervisor's time for every ten employees trained. In all, OSHA estimates that the one-time cost to qualify the estimated 713 climbers would be $1.56 million, and the annualized cost is $0.22 million per year.[28]

For the purposes of estimating the annual costs associated with this proposed paragraph, ERG applied the following unit estimates and assumptions:

• A supervisor observes each of the estimated 7,132 qualified climbers for 15 minutes per quarter or 1 hour per qualified climber per year;

• A supervisor spends 15 minutes per year per qualified climber on administrative tasks for training and re-training;

• Ten percent of the climbers need re-training;

• Retraining consists of an 8-hour refresher course at a cost of $500; and

• The turnover rate is 47 percent.

Based on ERG's analysis (ERG, 2007, Ex. 6), OSHA estimates that the annual cost would be $8.2 million, of which $7.4 million is due to the need to train new hires.[29] OSHA requests comment on the assumptions and unit cost estimates applied to its analysis of costs for qualified climber training.

Training Requirements (§ 1910.30)

Fall hazards and equipment hazards. Proposed § 1910.30(a) addresses training with respect to fall hazards. The training must be:

• Conducted by a qualified person;

• Include the nature of fall hazards in the workplace;

• Include the correct procedures for erecting, maintaining, disassembling, and inspecting the fall protection system used; and

• Include the use and operation of guardrail systems, personal fall protection systems, safety net systems, warning lines used in designated areas, and other (unspecified) protection to be used.

Proposed § 1910.30(b) addresses training with respect to equipment hazards. In particular, employees must be trained in the proper:

• Care, use, and inspection of equipment covered by subpart D before their use in accordance with recognized industry practices and manufacturers' recommendations;

• Placement and securing of dockboards to prevent unintentional movement; and

• Rigging and safe use of rope descent systems.

The costs for the training allocated under proposed § 1910.27(b)(2)(ii) (rope descent systems) and § 1910.28(b)(4) (duty to have fall protection: dockboards) are included in the cost estimate for proposed § 1910.30.

In a previous analysis, ERG estimated the number and percent of employees by industry that use personal protective equipment such as body belts and/or body harnesses (ERG, 1999, Ex. OSHA–S042–2006–0667–0318). ERG then applied these industry-specific percentages to the number of at-risk employees in 2008 to estimate the number of employees that need the type of training required under proposed § 1910.30.

Some companies already provide this training. ERG used data from the NOES survey to estimate, by NAICS code, the level of training that is already provided at the baseline.

For the purpose of estimating costs, ERG assumed that all employees that have not already been trained and use personal fall protection systems would undergo six hours of training on fall hazards and equipment hazards to address the requirements in proposed §§ 1910.30(a) and 1910.30(b)(1).

Employees in the utility, sewage, and communications industry sectors (NAICS 2211–2213 and 5121–5191) are assumed to undergo an additional half-day of training to specifically address the proposed requirements for step bolts (thus, a total of 10 hours of training). Similarly, employees in NAICS codes 4881 through 4884 (support activities for transportation by air, rail, water, and road, respectively) are assumed to undergo a half-day of training specifically to address requirements for dockboards. Window washers, found in NAICS 5617 (services to buildings and dwellings), are assumed to have an entire day devoted to training on rope descent systems (thus, a total of 14 hours of training).

As specified in the proposed standard, training would be provided by a qualified person. For the purpose of estimating costs, ERG assumed that the trainer conducts the training at the workplace, for a fee of $500 per day. The training fee includes instruction, travel, lodging, and per diem expenses, as well as hand-out materials. This fee is incurred per every 10 employees (*i.e.,* class size is limited to 10 people). A supervisor is assumed to spend 15 minutes per employee per year in administrative costs to maintain and update training records.

The estimated total one-time cost for proposed § 1910.30(a) and (b) is $81.5 million. This cost is annualized over ten years at an interest rate of seven percent. The annualized cost is $11.6 million. There is also an annual cost due to the need to train new employees. The BLS turnover rates are applied to estimate the annual number of new employees that need training. The estimated annual cost is $28.1 million.

Retraining. Proposed § 1910.30(c) concerns the need to retrain employees whenever the employer has reason to believe that retraining is required for safety purposes. This need can occur through such circumstances as changes in the workplace, fall protection systems, or fall protection equipment that render previous training invalid; or the discovery that employee knowledge or use of fall protection systems or equipment is no longer adequate. ERG assumed that retraining already occurs at establishments that have training programs in place. For the remaining employees, ERG assumed that five percent require retraining in any given year. The retraining course is assumed to be a 1-hour supervisor-led refresher course that focuses on the areas in

[28] Employers may offer on-the-job training and would presumably do so if the costs are less than that for commercial training. Thus, the estimated costs presented here may be conservatively high.

[29] OSHA presumes that a qualified climber could not bring his or her accreditation if he or she changes companies.

which the employee is deficient. Estimated costs for retraining would total $4.4 million.

Subpart I—Personal Protective Equipment

PPE inspection. Proposed § 1910.140(c)(18) would require that personal fall protection systems be inspected before each use for mildew, wear, damage, and other deterioration and that defective components be removed from service. For the purposes of estimating costs, ERG assumed that each employee who wears a personal fall protection system does so at the beginning of every work week, the employee works 50 weeks per year, and the inspection takes about one minute. The associated inspection cost is approximately $7.3 million per year.

Hazard assessment. Proposed § 1910.132(d) requires an employer to assess the workplace to determine if hazards are present or are likely to be present. ERG assumed that the amount of time needed by an employer to walk around the establishment, assess the potential hazard, and determine the appropriate PPE and training needed by the employees would vary with the size of the establishment. ERG used the number of employees as an indicator of establishment size. The time required for the hazard assessment was estimated as:

- 1 to 19 employees: 1 hour.
- 20 to 99 employees: 2 hours.
- 100 to 499 employees: 3 hours.
- 500+ employees: 4 hours.

Furthermore, ERG assumed that:

- All establishments in the forestry, oil and gas, utility, manufacturing, and transportation sectors (NAICS 1131 through 3399 and 4811 through 4931) would undertake a hazard assessment because of perceived risks;
- Half the establishments in wholesale and retail sales (NAICS 4231 through 4543) would undertake a hazard assessment; and
- One-quarter of the establishments in the service industries (NAICS 5111 through 8139) would undertake a hazard assessment.

This analysis results in a one-time cost of $79.0 million which can also be expressed as an annualized cost of $11.3 million.

PPE training. Proposed § 1910.132(f) requires that employees be trained prior to using PPE in the workplace. The costs for this paragraph are included in the costs for proposed § 1910.30, described earlier.

Cost Summary

Tables V–25 through V–27 summarize the costs by industry for each paragraph in the proposed standard. Table V–25 lists the first-year costs. These costs are incurred once to bring the employee population into compliance with the new requirements. For the purpose of evaluating impacts, these one-time costs are annualized over a 10-year period at an interest rate of 7 percent. Total first-year costs are $173.3 million; annualized, the costs for the first year total $24.7 million.

Table V–26 lists the recurring costs, such as inspections and training new employees. These costs are incurred annually and are estimated at $148.5 million. Table V–27 lists the annual costs to industry, that is, the sum of the recurring costs and the annualized one-time costs. The cost to industry is estimated at $173.2 million.

Listing annualized costs in descending order by section of the rule, OSHA projects that the most costly provisions are associated with scaffolds ($73.0 million), training programs ($44.1 million), and fall protection equipment criteria ($18.5 million). For scaffolds, proposed § 1910.27(b)(2)(iv) requires that employers use proper rigging, including sound anchorages and tiebacks. As described earlier in this cost analysis, OSHA interpreted this provision as implying that periodic inspections and certifications of building anchorages would be scheduled to ensure compliance.

Because of the inherent risk involved with cleaning windows of office buildings and other tall structures while suspended on scaffolds or other devices (*see* Table V–6 for the number of reported fatalities in NAICS 561, Administrative and Support Services), the issue of proper safety during window cleaning was raised by OSHA in the 2003 notice that reopened the rulemaking record. In this notice, OSHA requested comment on the hazards associated with window cleaning and the safe practices that have been recommended and implemented through the use of rope decent systems (controlled descent devices) (68 FR 23534). OSHA's analysis of the costs of ensuring sound anchorages and rigging, described above and in the ERG report (ERG, 2007, Ex. 6), is based upon the experiences and observations of the industry representatives who responded to OSHA's request for comment in 2003. In this current rulemaking, OSHA requests that interested parties review the details of OSHA's analysis of costs for scaffolds in this PEA and submit comments into the record.

BILLING CODE 4510–29–P

Table V-25
First-Year Costs for the Proposed Standard on Walking-Working Surfaces, by Paragraph and Industry

NAICS	Title	One-Time Compliance Costs								
		§1910.22	§1910.23	§1910.24	§1910.27	§1910.28	§1910.29	§1910.30	§1910.140	Total
		General Require-ments	Ladders	Step Bolts and Manhole Steps	Scaffolds	Duty to Have Fall Protection	Fall Protection Systems Criteria and Practices	Training Program	Fall Protection	
11	Agriculture, Forestry, Fishing, and Hunting	$0	$4,164	$0	$0	$0	$0	$43,820	$269,943	$317,926
21	Mining	$0	$48,788	$0	$0	$0	$0	$1,214,765	$296,331	$1,559,885
22	Utilities	$0	$265,307	$0	$0	$0	$0	$3,380,676	$1,311,927	$4,957,910
31-33	Manufacturing	$0	$1,046,543	$0	$0	$0	$0	$12,884,562	$10,563,281	$24,494,386
42	Wholesale Trade	$0	$1,097,066	$0	$0	$0	$0	$13,293,324	$6,876,607	$21,266,997
44-45	Retail Trade	$0	$2,121,579	$0	$0	$0	$0	$11,440,878	$18,334,661	$31,897,117
48-49	Transportation	$0	$267,530	$0	$0	$0	$0	$4,547,407	$7,242,704	$12,057,641
51	Information	$0	$995,945	$0	$0	$0	$0	$13,132,793	$2,392,214	$16,520,952
52	Finance and Insurance	$0	$33,443	$0	$0	$0	$0	$299,968	$5,236,091	$5,569,502
53	Real Estate	$0	$917,898	$0	$0	$0	$0	$1,201,459	$2,987,784	$5,107,140
54	Professional, Scientific, and Technical Services	$0	$415,543	$0	$0	$0	$1,558,736	$5,409,069	$5,484,545	$12,867,893
55	Management of Companies and Enterprises	$0	$233,546	$0	$0	$0	$0	$1,844,184	$800,863	$2,878,593
56	Administrative and Support, Waste Management and Remediation Services	$0	$1,384,869	$0	$0	$0	$0	$5,749,091	$2,577,391	$9,711,351
61	Educational Services	$0	$70,848	$0	$0	$0	$0	$0	$559,706	$630,554
62	Health Care	$0	$39,844	$0	$0	$0	$0	$961,291	$5,339,931	$6,341,067
71	Arts, Entertainment, and Recreation	$0	$179,477	$0	$0	$0	$0	$0	$783,592	$963,069
72	Accommodation and Food Services	$0	$192,938	$0	$0	$0	$0	$1,555,767	$3,931,313	$5,680,019
81	Other Services	$0	$1,892,680	$0	$0	$0	$0	$4,491,560	$4,049,993	$10,434,234
Total		**$0**	**$11,208,008**	**$0**	**$0**	**$0**	**$1,558,736**	**$81,450,614**	**$79,038,878**	**$173,256,236**

Source: U.S. Dept. of Labor, OSHA, Directorate of Evaluation and Analysis, Office of Regulatory Analysis, based on ERG, 2007.

Table V-26
Recurring Costs for the Proposed Standard on Walking-Working Surfaces, by Paragraph and Industry

NAICS	Title	Recurring Compliance Costs								
		§1910.22	§1910.23	§1910.24	§1910.27	§1910.28	§1910.29	§1910.30	§1910.140	
		General Requirements	Ladders	Step Bolts and Manhole Steps	Scaffolds	Duty to Have Fall Protection	Fall Protection Systems Criteria and Practices	Training Program	Fall Protection	Total
11	Agriculture, Forestry, Fishing, and Hunting	$45,515	$8,676	$0	$0	$0	$0	$12,130	$4,327	$70,648
21	Mining	$33,710	$18,054	$0	$0	$0	$0	$314,099	$128,244	$494,107
22	Utilities	$75,697	$97,469	$3,572,780	$0	$0	$0	$1,164,418	$230,200	$5,140,564
31-33	Manufacturing	$1,330,596	$454,740	$0	$0	$0	$0	$3,536,088	$1,275,360	$6,596,784
42	Wholesale Trade	$2,162,313	$545,528	$0	$0	$0	$0	$3,892,337	$1,292,804	$7,892,982
44-45	Retail Trade	$3,036,540	$1,578,974	$0	$0	$0	$0	$6,239,105	$1,069,263	$11,923,883
48-49	Transportation	$723,861	$217,350	$0	$0	$0	$0	$1,534,471	$452,288	$2,927,970
51	Information	$685,276	$357,887	$49,756	$0	$0	$0	$3,996,658	$872,127	$5,961,704
52	Finance and Insurance	$462,230	$277,522	$0	$0	$0	$0	$94,483	$27,268	$861,503
53	Real Estate	$428,747	$499,135	$0	$0	$0	$0	$701,322	$113,143	$1,742,347
54	Professional, Scientific, and Technical Services	$1,779,896	$725,699	$0	$0	$87,711	$8,157,986	$2,714,844	$547,687	$14,013,823
55	Management of Companies and Enterprises	$105,733	$141,684	$0	$0	$0	$0	$960,136	$185,283	$1,392,836
56	Administrative and Support, Waste Management and Remediation Services	$693,363	$860,299	$0	$72,971,664	$0	$0	$3,107,470	$440,608	$78,073,405
61	Educational Services	$155,261	$79,649	$0	$0	$0	$0	$27,333	$0	$262,244
62	Health Care	$1,431,364	$445,577	$0	$0	$0	$0	$469,695	$87,801	$2,434,438
71	Arts, Entertainment, and Recreation	$252,535	$160,022	$34,412	$0	$0	$0	$73,242	$0	$520,212
72	Accommodation and Food Services	$939,965	$371,578	$0	$0	$0	$0	$810,797	$133,191	$2,255,532
81	Other Services	$1,358,437	$1,298,336	$0	$0	$0	$0	$2,853,549	$422,080	$5,932,403
Total		**$15,701,040**	**$8,138,180**	**$3,656,949**	**$72,971,664**	**$87,711**	**$8,157,986**	**$32,502,177**	**$7,281,676**	**$148,497,383**

Source: U.S. Dept. of Labor, OSHA, Directorate of Evaluation and Analysis, Office of Regulatory Analysis, based on ERG, 2007.

Table V-27
Annualized Costs for the Proposed Standard on Walking-Working Surfaces, by Paragraph and Industry

NAICS	Title	Annualized Compliance Costs								
		§1910.22	§1910.23	§1910.24	§1910.27	§1910.28	§1910.29	§1910.30	§1910.140	
		General Requirements	Ladders	Step Bolts and Manhole Steps	Scaffolds	Duty to Have Fall Protection	Fall Protection Systems Criteria and Practices	Training Program	Fall Protection	Total
11	Agriculture, Forestry, Fishing, and Hunting	$45,515	$9,269	$0	$0	$0	$0	$18,369	$42,760	$115,913
21	Mining	$33,710	$25,000	$0	$0	$0	$0	$487,054	$170,435	$716,200
22	Utilities	$75,697	$135,243	$3,572,780	$0	$0	$0	$1,645,750	$416,989	$5,846,459
31-33	Manufacturing	$1,330,596	$603,744	$0	$0	$0	$0	$5,370,560	$2,779,333	$10,084,234
42	Wholesale Trade	$2,162,313	$701,725	$0	$0	$0	$0	$5,785,007	$2,271,879	$10,920,924
44-45	Retail Trade	$3,036,540	$1,881,040	$0	$0	$0	$0	$7,868,029	$3,679,706	$16,465,315
48-49	Transportation	$723,861	$255,440	$0	$0	$0	$0	$2,181,920	$1,483,486	$4,644,707
51	Information	$685,276	$499,687	$49,756	$0	$0	$0	$5,866,472	$1,212,725	$8,313,915
52	Finance and Insurance	$462,230	$282,284	$0	$0	$0	$0	$137,192	$772,769	$1,654,475
53	Real Estate	$428,747	$629,823	$0	$0	$0	$0	$872,383	$538,536	$2,469,489
54	Professional, Scientific, and Technical Services	$1,779,896	$784,863	$0	$0	$87,711	$8,379,915	$3,484,973	$1,328,563	$15,845,921
55	Management of Companies and Enterprises	$105,733	$174,936	$0	$0	$0	$0	$1,222,706	$299,308	$1,802,683
56	Administrative and Support, Waste Management and Remediation Services	$693,363	$1,057,474	$0	$72,971,664	$0	$0	$3,926,011	$807,570	$79,456,082
61	Educational Services	$155,261	$89,737	$0	$0	$0	$0	$27,333	$79,689	$352,021
62	Health Care	$1,431,364	$451,250	$0	$0	$0	$0	$606,561	$848,088	$3,337,263
71	Arts, Entertainment, and Recreation	$252,535	$185,576	$34,412	$0	$0	$0	$73,242	$111,566	$657,331
72	Accommodation and Food Services	$939,965	$399,048	$0	$0	$0	$0	$1,032,304	$692,922	$3,064,239
81	Other Services	$1,358,437	$1,567,811	$0	$0	$0	$0	$3,493,047	$998,708	$7,418,003
Total		**$15,701,040**	**$9,733,948**	**$3,656,949**	**$72,971,664**	**$87,711**	**$8,379,915**	**$44,098,912**	**$18,535,034**	**$173,165,173**

Source: U.S. Dept. of Labor, OSHA, Directorate of Evaluation and Analysis, Office of Regulatory Analysis, based on ERG, 2007.

BILLING CODE 4510–29–C

G. Economic Impacts

Introduction

OSHA has determined that the costs of complying with the requirements of the proposed revisions to subparts D and I will not impose adverse economic impacts on employers in the industries affected by the rule. The costs imposed by the standard are modest, and the increased safety and reduction in injuries and fatalities associated with the standard will ultimately reduce employers' direct and indirect costs. This preliminary analysis of economic impacts is based on industry data described above in section *C,* Profile of Affected Industries, Firms, and Workers, the cost analysis presented in section E, Costs of Compliance, and analysis by OSHA's contractor, ERG (ERG, 2007, Ex. 6).

OSHA's preliminary impacts are summarized in Table V–28 for the two-digit NAICS industry groups affected by the proposed standard. "Minimum" and "Maximum" refer to the lowest and highest costs among the four-digit NAICS industries categorized within the two-digit group. The following section discusses OSHA's methodology for assessing the significance of the impacts at the aggregate level presented in Table V–29 and at levels of greater industry detail.

Economic Screening Analysis

To determine whether the proposed rule's projected costs of compliance would raise issues of economic feasibility for employers in affected industries, i.e., would adversely alter the competitive structure of the industry, OSHA first compared compliance costs to industry revenues and profits. OSHA then examined specific factors affecting individual industries where compliance costs represent a significant share of revenue, or where the record contains other evidence that the standard could have significant impact on the competitive structure of the industry.

As noted, OSHA examined the potential impacts of the proposed standards rule two ways—as a percentage of revenues and as a percentage of profits. The estimated average receipts and profits by establishment and industry are presented in the Table V–29. Applying the methodology employed by ERG (ERG, 2007, Ex. 6), OSHA estimated 2006 receipts based on 2002 receipts and payroll data from U.S. Census Bureau, *Statistics of U.S. Businesses, 2002,* and payroll data from U.S. Census Bureau, *Statistics of U.S. Businesses, 2006.* For that calculation, OSHA assumed that the ratio of receipts to payroll remained unchanged between 2002 and 2006. OSHA estimated profits from ratios of net income to total receipts as reported for 2000–2006 (seven-year average) by the U.S. Internal Revenue Service, *Corporation Source Book.* Profit data were not available at disaggregated levels for all industries; therefore, profit rates at more highly aggregated levels were used for such industries.

BILLING CODE 4510–29–P

Table V-28
Summary of Cost Impacts Associated with OSHA's Proposed Revisions to the Standards for Subparts D and I

NAICS	Sector Title	Average Cost per Establishment		Ratio of Average Cost to Revenues		Ratio of Average Cost to Profits	
		Minimum	Maximum	Minimum	Maximum	Minimum	Maximum
11	Agriculture, Forestry, Fishing, and Hunting	$6	$9	0.000%	0.001%	0.008%	0.020%
21	Mining*	$92	$92	0.000%	0.000%	0.002%	0.002%
22	Utilities	$124	$434	0.000%	0.025%	0.014%	0.350%
31-33	Manufacturing	$8	$363	0.000%	0.002%	0.000%	0.067%
42	Wholesale Trade	$9	$43	0.000%	0.001%	0.002%	0.019%
44-45	Retail Trade	$4	$55	0.000%	0.002%	0.004%	0.056%
48-49	Transportation	$7	$302	0.000%	0.002%	0.000%	0.052%
51	Information	$6	$443	0.000%	0.002%	0.001%	0.034%
52	Finance and Insurance	$2	$10	0.000%	0.000%	0.000%	0.003%
53	Real Estate	$4	$14	0.000%	0.001%	0.001%	0.023%
54	Professional, Scientific, and Technical Services	$6	$225	0.000%	0.012%	0.006%	0.143%
55	Management	$37	$37	0.000%	0.000%	0.006%	0.006%
56	Administrative and Support, Waste Management and Remediation Services	$7	$423	0.000%	0.077%	0.003%	1.726%
61	Educational Services	$3	$18	0.000%	0.001%	0.001%	0.009%
62	Health Care	$3	$73	0.000%	0.001%	0.001%	0.013%
71	Arts, Entertainment, and Recreation	$4	$11	0.000%	0.001%	0.001%	0.009%
72	Accommodation and Food Services	$3	$17	0.000%	0.001%	0.008%	0.020%
81	Other Services	$2	$33	0.000%	0.003%	0.006%	0.069%

*Includes oil and gas extraction.

Source: ERG, 2007.

Table V-29
Average Cost Impacts on Establishments Affected by OSHA's Proposed Revision to Subparts D and I (per Establishment, by 4-Digit NAICS Code)

NAICS	Industry	Average Receipts per Estab. [a]	Profit Rate [b]		Estimated Profits per Estab.	Estimated Cost of Proposed Rule	Average Cost per Estab.	Ratio of Average Cost to Revenues	Ratio of Average Cost to Profits
1131	Timber Tract Operations	$2,036,662	4.36%	*	$88,884	$3,167	$6.98	0.000%	0.008%
1132	Forest Nurseries and Gathering of Forest Products	$1,282,856	4.36%	*	$55,987	$1,867	$8.08	0.001%	0.014%
1133	Logging	$993,249	4.36%	*	$43,347	$85,767	$8.54	0.001%	0.020%
1141	Fishing	$945,244	5.93%	*	$56,099	$12,258	$6.06	0.001%	0.011%
1142	Hunting and Trapping	$610,900	5.93%	*	$36,256	$2,124	$6.10	0.001%	0.017%
1153	Support Activities for Forestry	$874,316	5.44%	*	$47,559	$10,731	$6.38	0.001%	0.013%
2111	Oil and Gas Extraction	$30,788,486	14.88%		$4,581,731	$716,200	$91.79	0.000%	0.002%
2211	Electric Power Generation, Transmission and Distribution	$38,674,660	4.44%		$1,716,991	$3,277,220	$345.19	0.001%	0.020%
2212	Natural Gas Distribution	$30,459,101	2.98%		$907,390	$305,056	$124.11	0.000%	0.014%
2213	Water, Sewage and Other Systems	$1,753,158	7.06%		$123,776	$2,264,184	$433.59	0.025%	0.350%
3111	Animal Food Manufacturing	$19,646,498	4.24%		$833,877	$32,925	$18.32	0.000%	0.002%
3112	Grain and Oilseed Milling	$67,092,728	4.24%	*	$2,847,687	$29,452	$37.33	0.000%	0.001%
3113	Sugar and Confectionery Product Manufacturing	$15,335,745	7.68%		$1,177,956	$37,243	$21.49	0.000%	0.002%
3114	Fruit and Vegetable Preserving and Specialty Food Manufacturing	$36,162,586	7.01%		$2,535,469	$67,641	$39.65	0.000%	0.002%

Table V-29, contd.
Average Cost Impacts on Establishments Affected by OSHA's Proposed Revision to Subparts D and I (per Establishment, by 4-Digit NAICS Code)

NAICS	Industry	Average Receipts per Estab. [a]	Profit Rate [b]		Estimated Profits per Estab.	Estimated Cost of Proposed Rule	Average Cost per Estab.	Ratio of Average Cost to Revenues	Ratio of Average Cost to Profits
3115	Dairy Product Manufacturing	$46,854,264	2.66%		$1,244,682	$61,363	$38.30	0.000%	0.003%
3116	Animal Slaughtering and Processing	$36,333,693	2.41%		$874,508	$160,347	$42.11	0.000%	0.005%
3117	Seafood Product Preparation and Packaging	$14,575,219	2.41%	*	$350,808	$14,321	$21.37	0.000%	0.006%
3118	Bakeries and Tortilla Manufacturing	$5,234,957	10.13%		$530,163	$153,852	$15.28	0.000%	0.003%
3119	Other Food Manufacturing	$21,407,943	5.68%		$1,215,113	$78,167	$24.39	0.000%	0.002%
3121	Beverage Manufacturing	$20,793,132	6.64%	*	$1,381,286	$80,355	$22.60	0.000%	0.002%
3122	Tobacco Manufacturing	$294,956,118	14.49%		$42,744,884	$13,181	$102.97	0.000%	0.000%
3131	Fiber, Yarn, and Thread Mills	$18,783,597	4.31%	*	$810,359	$19,007	$40.61	0.000%	0.005%
3132	Fabric Mills	$11,516,969	4.31%	*	$496,863	$38,791	$28.19	0.000%	0.006%
3133	Textile and Fabric Finishing and Fabric Coating Mills	$7,019,640	4.31%	*	$302,840	$22,895	$16.37	0.000%	0.005%
3141	Textile Furnishings Mills	$8,027,868	4.56%	*	$365,941	$39,221	$15.27	0.000%	0.004%
3149	Other Textile Product Mills	$2,504,229	4.56%	*	$114,152	$45,143	$10.86	0.000%	0.010%
3151	Apparel Knitting Mills	$7,448,839	3.16%		$235,519	$10,783	$20.31	0.000%	0.009%
3152	Cut and Sew Apparel Manufacturing	$2,742,653	5.59%		$153,271	$75,599	$7.97	0.000%	0.005%
3159	Apparel Accessories and Other Apparel Manufacturing	$2,154,523	4.66%		$100,388	$9,514	$10.06	0.000%	0.010%
3161	Leather and Hide Tanning and Finishing	$5,524,049	6.10%	*	$336,766	$3,172	$12.59	0.000%	0.004%
3162	Footwear Manufacturing	$8,227,628	6.10%	*	$501,585	$5,784	$18.78	0.000%	0.004%
3169	Other Leather and Allied Product Manufacturing	$2,714,697	6.10%	*	$165,498	$7,405	$8.84	0.000%	0.005%
3211	Sawmills and Wood Preservation	$7,011,185	4.08%	*	$286,041	$71,132	$16.84	0.000%	0.006%

Table V-29, contd.
Average Cost Impacts on Establishments Affected by OSHA's Proposed Revision to Subparts D and I (per Establishment, by 4-Digit NAICS Code)

NAICS	Industry	Average Receipts per Estab. [a]	Profit Rate [b]		Estimated Profits per Estab.	Estimated Cost of Proposed Rule	Average Cost per Estab.	Ratio of Average Cost to Revenues	Ratio of Average Cost to Profits
3212	Veneer, Plywood, and Engineered Wood Product Manufacturing	$12,197,313	4.08%	*	$497,624	$56,344	$28.81	0.000%	0.006%
3219	Other Wood Product Manufacturing	$4,711,036	4.08%	*	$192,200	$184,373	$17.47	0.000%	0.009%
3221	Pulp, Paper, and Paperboard Mills	$112,157,688	3.18%		$3,566,640	$184,472	$309.00	0.000%	0.009%
3222	Converted Paper Product Manufacturing	$18,965,317	8.01%		$1,519,550	$331,070	$72.89	0.000%	0.005%
3231	Printing and Related Support Activities	$2,815,173	4.37%	*	$123,080	$436,448	$13.05	0.000%	0.011%
3241	Petroleum and Coal Products Manufacturing	$111,722,106	7.50%	*	$8,380,487	$344,776	$140.84	0.000%	0.002%
3251	Basic Chemical Manufacturing	$45,992,561	4.58%		$2,106,478	$411,790	$169.25	0.000%	0.008%
3252	Resin, Synthetic Rubber, and Artificial Synthetic Fibers and Filaments Manufacturing	$59,275,434	8.53%		$5,056,258	$208,212	$196.61	0.000%	0.004%
3253	Pesticide, Fertilizer, and Other Agricultural Chemical Manufacturing	$20,532,685	11.10%	*	$2,278,119	$75,128	$80.96	0.000%	0.004%
3254	Pharmaceutical and Medicine Manufacturing	$92,789,569	16.64%		$15,436,508	$206,950	$109.73	0.000%	0.001%
3255	Paint, Coating, and Adhesive Manufacturing	$17,095,265	5.38%		$920,475	$63,347	$33.08	0.000%	0.004%
3256	Soap, Cleaning Compound, and Toilet Preparation Manufacturing	$30,617,646	9.21%		$2,818,503	$124,153	$54.48	0.000%	0.002%
3259	Other Chemical Product and Preparation Manufacturing	$14,693,347	4.51%		$662,055	$134,299	$48.89	0.000%	0.007%
3261	Plastics Product Manufacturing	$12,041,641	4.42%		$531,848	$292,915	$23.74	0.000%	0.004%

Table V-29, contd.
Average Cost Impacts on Establishments Affected by OSHA's Proposed Revision to Subparts D and I (per Establishment, by 4-Digit NAICS Code)

NAICS	Industry	Average Receipts per Estab. [a]	Profit Rate [b]		Estimated Profits per Estab.	Estimated Cost of Proposed Rule	Average Cost per Estab.	Ratio of Average Cost to Revenues	Ratio of Average Cost to Profits
3262	Rubber Product Manufacturing	$14,217,509	2.59%		$368,116	$65,482	$29.09	0.000%	0.008%
3271	Clay Product and Refractory Manufacturing	$5,317,927	4.41%		$234,782	$63,081	$40.00	0.001%	0.017%
3272	Glass and Glass Product Manufacturing	$10,171,989	3.42%		$347,975	$121,632	$57.84	0.001%	0.017%
3273	Cement and Concrete Product Manufacturing	$5,507,579	6.64%		$365,598	$349,199	$35.03	0.001%	0.010%
3274	Lime and Gypsum Product Manufacturing	$18,475,560	6.64%	*	$1,226,424	$24,774	$69.39	0.000%	0.006%
3279	Other Nonmetallic Mineral Product Manufacturing	$5,468,993	5.49%	*	$300,195	$111,374	$33.31	0.001%	0.011%
3311	Iron and Steel Mills and Ferroalloy Manufacturing	$65,928,896	4.49%		$2,961,518	$169,255	$204.66	0.000%	0.007%
3312	Steel Product Manufacturing from Purchased Steel	$21,605,469	4.49%	*	$970,515	$59,690	$85.52	0.000%	0.009%
3313	Alumina and Aluminum Production and Processing	$47,054,339	4.46%		$2,100,943	$84,809	$139.49	0.000%	0.007%
3314	Nonferrous Metal (except Aluminum) Production and Processing	$24,919,805	4.42%	*	$1,100,215	$81,091	$85.81	0.000%	0.008%
3315	Foundries	$12,157,333	4.11%		$500,129	$91,525	$41.47	0.000%	0.008%
3321	Forging and Stamping	$9,147,934	4.71%		$430,416	$79,843	$29.35	0.000%	0.007%
3322	Cutlery and Handtool Manufacturing	$6,875,867	5.22%		$359,170	$33,409	$22.24	0.000%	0.006%
3323	Architectural and Structural Metals Manufacturing	$5,273,124	4.70%		$248,040	$277,903	$20.62	0.000%	0.008%

Table V-29, contd.
Average Cost Impacts on Establishments Affected by OSHA's Proposed Revision to Subparts D and I (per Establishment, by 4-Digit NAICS Code)

NAICS	Industry	Average Receipts per Estab. [a]	Profit Rate [b]		Estimated Profits per Estab.	Estimated Cost of Proposed Rule	Average Cost per Estab.	Ratio of Average Cost to Revenues	Ratio of Average Cost to Profits
3324	Boiler, Tank, and Shipping Container Manufacturing	$17,390,735	3.58%		$623,211	$47,156	$30.34	0.000%	0.005%
3325	Hardware Manufacturing	$11,194,203	5.22%	*	$584,745	$23,719	$28.65	0.000%	0.005%
3326	Spring and Wire Product Manufacturing	$5,585,199	5.22%	*	$291,751	$35,029	$21.22	0.000%	0.007%
3327	Machine Shops; Turned Product; and Screw, Nut, and Bolt Manufacturing	$2,040,137	5.80%	*	$118,290	$362,885	$14.60	0.001%	0.012%
3328	Coating, Engraving, Heat Treating, and Allied Activities	$3,426,310	4.85%		$166,333	$98,813	$16.11	0.000%	0.010%
3329	Other Fabricated Metal Product Manufacturing	$8,770,725	6.81%		$597,016	$166,403	$26.26	0.000%	0.004%
3331	Agriculture, Construction, and Mining Machinery Manufacturing	$20,488,525	5.10%		$1,044,755	$112,063	$37.42	0.000%	0.004%
3332	Industrial Machinery Manufacturing	$7,725,192	5.80%		$447,965	$95,988	$24.72	0.000%	0.006%
3333	Commercial and Service Industry Machinery Manufacturing	$9,406,943	4.86%		$457,035	$64,167	$27.90	0.000%	0.006%
3334	Ventilation, Heating, Air-Conditioning, and Commercial Refrigeration Equipment Manufacturing	$19,910,908	4.55%		$906,531	$82,240	$45.66	0.000%	0.005%
3335	Metalworking Machinery Manufacturing	$3,107,359	5.29%		$164,359	$153,624	$18.78	0.001%	0.011%
3336	Engine, Turbine, and Power Transmission Equipment Manufacturing	$46,836,712	2.63%		$1,230,370	$58,621	$64.07	0.000%	0.005%

Table V-29, contd.
Average Cost Impacts on Establishments Affected by OSHA's Proposed Revision to Subparts D and I (per Establishment, by 4-Digit NAICS Code)

NAICS	Industry	Average Receipts per Estab. [a]	Profit Rate [b]		Estimated Profits per Estab.	Estimated Cost of Proposed Rule	Average Cost per Estab.	Ratio of Average Cost to Revenues	Ratio of Average Cost to Profits
3339	Other General Purpose Machinery Manufacturing	$10,364,603	4.58%		$474,321	$185,728	$29.75	0.000%	0.006%
3341	Computer and Peripheral Equipment Manufacturing	$43,720,123	9.05%		$3,955,137	$44,676	$33.77	0.000%	0.001%
3342	Communications Equipment Manufacturing	$36,209,046	4.57%		$1,655,776	$78,202	$41.69	0.000%	0.003%
3343	Audio and Video Equipment Manufacturing	$14,666,519	4.52%		$663,105	$11,000	$21.24	0.000%	0.003%
3344	Semiconductor and Other Electronic Component Manufacturing	$23,066,585	6.60%		$1,523,547	$178,744	$37.46	0.000%	0.002%
3345	Navigational, Measuring, Electromedical, and Control Instruments Manufacturing	$20,026,780	5.94%		$1,190,090	$203,250	$38.80	0.000%	0.003%
3346	Manufacturing and Reproducing Magnetic and Optical Media	$10,519,005	4.52%	*	$475,587	$18,695	$22.77	0.000%	0.005%
3351	Electric Lighting Equipment Manufacturing	$11,180,632	4.21%		$471,061	$30,795	$25.92	0.000%	0.006%
3352	Household Appliance Manufacturing	$60,184,733	4.21%		$2,535,698	$30,011	$82.45	0.000%	0.003%
3353	Electrical Equipment Manufacturing	$13,373,183	7.15%		$955,920	$74,896	$31.25	0.000%	0.003%
3359	Other Electrical Equipment and Component Manufacturing	$17,834,795	5.41%		$965,274	$77,291	$35.78	0.000%	0.004%
3361	Motor Vehicle Manufacturing	$657,511,204	4.87%		$31,995,638	$134,474	$363.44	0.000%	0.001%
3362	Motor Vehicle Body and Trailer Manufacturing	$15,581,739	2.04%	*	$317,940	$82,883	$38.43	0.000%	0.012%

Table V-29, contd.
Average Cost Impacts on Establishments Affected by OSHA's Proposed Revision to Subparts D and I (per Establishment, by 4-Digit NAICS Code)

NAICS	Industry	Average Receipts per Estab. [a]	Profit Rate [b]		Estimated Profits per Estab.	Estimated Cost of Proposed Rule	Average Cost per Estab.	Ratio of Average Cost to Revenues	Ratio of Average Cost to Profits
3363	Motor Vehicle Parts Manufacturing	$36,598,197	2.04%	*	$746,774	$351,672	$63.30	0.000%	0.008%
3364	Aerospace Product and Parts Manufacturing	$89,563,292	2.04%		$1,827,510	$240,905	$145.74	0.000%	0.008%
3365	Railroad Rolling Stock Manufacturing	$44,874,806	4.16%	*	$1,867,908	$17,107	$81.08	0.000%	0.004%
3366	Ship and Boat Building	$13,764,238	2.72%		$374,771	$440,511	$249.72	0.002%	0.067%
3369	Other Transportation Equipment Manufacturing	$16,837,953	5.86%		$987,003	$28,169	$28.28	0.000%	0.003%
3371	Household and Institutional Furniture and Kitchen Cabinet Manufacturing	$2,845,652	6.31%	*	$179,541	$210,037	$12.88	0.000%	0.007%
3372	Office Furniture (including Fixtures) Manufacturing	$5,722,951	4.54%	*	$260,001	$73,350	$17.92	0.000%	0.007%
3379	Other Furniture Related Product Manufacturing	$8,178,416	4.54%	*	$371,556	$19,374	$18.38	0.000%	0.005%
3391	Medical Equipment and Supplies Manufacturing	$6,107,312	4.54%		$277,463	$212,803	$17.41	0.000%	0.006%
3399	Other Miscellaneous Manufacturing	$3,513,187	10.77%		$378,338	$294,315	$15.48	0.000%	0.004%
4231	Motor Vehicle and Motor Vehicle Parts and Supplies Merchant Wholesalers	$31,354,335	5.80%		$1,817,155	$785,276	$32.02	0.000%	0.002%
4232	Furniture and Home Furnishing Merchant Wholesalers	$7,064,656	2.76%	*	$194,833	$220,375	$17.55	0.000%	0.009%
4233	Lumber and Other Construction Materials Merchant Wholesalers	$10,027,890	2.90%		$291,214	$566,219	$29.90	0.000%	0.010%

Table V-29, contd.
Average Cost Impacts on Establishments Affected by OSHA's Proposed Revision to Subparts D and I (per Establishment, by 4-Digit NAICS Code)

NAICS	Industry	Average Receipts per Estab. [a]	Profit Rate [b]	Estimated Profits per Estab.	Estimated Cost of Proposed Rule	Average Cost per Estab.	Ratio of Average Cost to Revenues	Ratio of Average Cost to Profits
4234	Professional and Commercial Equipment and Supplies Merchant Wholesalers	$13,020,195	3.04%	$396,021	$1,590,635	$43.44	0.000%	0.011%
4235	Metal and Mineral (except Petroleum) Merchant Wholesalers	$14,644,310	2.78%	$407,362	$239,624	$22.49	0.000%	0.006%
4236	Electrical and Electronic Goods Merchant Wholesalers	$13,954,419	2.69%	$375,249	$1,031,179	$35.28	0.000%	0.009%
4237	Hardware, and Plumbing and Heating Equipment and Supplies Merchant Wholesalers	$6,412,786	2.28%	$146,016	$537,529	$28.06	0.000%	0.019%
4238	Machinery, Equipment, and Supplies Merchant Wholesalers	$6,296,743	2.99%	$188,272	$1,951,908	$33.06	0.001%	0.018%
4239	Miscellaneous Durable Goods Merchant Wholesalers	$5,977,921	3.44%	$205,377	$719,695	$21.17	0.000%	0.010%
4241	Paper and Paper Product Merchant Wholesalers	$11,175,943	2.90%	$324,554	$179,051	$15.23	0.000%	0.005%
4242	Drugs and Druggists' Sundries Merchant Wholesalers	$34,610,272	2.12%	$735,463	$118,786	$15.56	0.000%	0.002%
4243	Apparel, Piece Goods, and Notions Merchant Wholesalers	$8,758,485	3.46%	$302,636	$139,055	$8.87	0.000%	0.003%
4244	Grocery and Related Product Wholesalers	$19,821,047	4.79%	$950,239	$854,835	$25.53	0.000%	0.003%
4245	Farm Product Raw Material Merchant Wholesalers	$18,364,754	2.59%	$476,056	$89,026	$13.43	0.000%	0.003%
4246	Chemical and Allied Products Merchant Wholesalers	$9,847,751	2.28%	$224,516	$311,047	$24.93	0.000%	0.011%

Table V-29, contd.
Average Cost Impacts on Establishments Affected by OSHA's Proposed Revision to Subparts D and I (per Establishment, by 4-Digit NAICS Code)

NAICS	Industry	Average Receipts per Estab. [a]	Profit Rate [b]		Estimated Profits per Estab.	Estimated Cost of Proposed Rule	Average Cost per Estab.	Ratio of Average Cost to Revenues	Ratio of Average Cost to Profits
4247	Petroleum and Petroleum Products Merchant Wholesalers	$49,353,607	3.16%		$1,561,675	$240,274	$33.49	0.000%	0.002%
4248	Beer, Wine, and Distilled Alcoholic Beverage Merchant Wholesalers	$25,249,332	2.00%		$504,190	$114,091	$27.58	0.000%	0.005%
4249	Miscellaneous Nondurable Goods Merchant Wholesalers	$8,167,972	3.92%		$320,013	$399,624	$12.57	0.000%	0.004%
4251	Wholesale Electronic Markets and Agents and Brokers	$5,145,093	3.18%	*	$163,757	$832,693	$15.28	0.000%	0.009%
4411	Automobile Dealers	$14,366,952	7.14%		$1,025,770	$2,859,160	$54.80	0.000%	0.005%
4412	Other Motor Vehicle Dealers	$3,798,159	1.18%	**	$44,861	$409,433	$24.38	0.001%	0.054%
4413	Automotive Parts, Accessories, and Tire Stores	$1,337,738	2.78%	*	$37,149	$1,238,044	$20.83	0.002%	0.056%
4421	Furniture Stores	$2,037,962	1.45%	*	$29,470	$320,422	$10.96	0.001%	0.037%
4422	Home Furnishings Stores	$1,383,751	3.63%	*	$50,272	$564,198	$15.41	0.001%	0.031%
4431	Electronics and Appliance Stores	$2,089,112	3.63%	*	$75,898	$980,516	$19.88	0.001%	0.026%
4441	Building Material and Supplies Dealers	$4,395,212	3.52%	*	$154,712	$1,474,836	$21.90	0.000%	0.014%
4442	Lawn and Garden Equipment and Supplies Stores	$1,847,574	7.87%	**	$145,384	$283,045	$13.81	0.001%	0.010%
4451	Grocery Stores	$4,841,064	2.20%	*	$106,707	$637,780	$6.77	0.000%	0.006%
4452	Specialty Food Stores	$625,965	2.07%	*	$12,934	$157,546	$5.63	0.001%	0.044%
4453	Beer, Wine, and Liquor Stores	$1,116,580	2.07%	*	$23,072	$134,786	$4.46	0.000%	0.019%
4461	Health and Personal Care Stores	$2,866,179	2.34%	*	$67,148	$706,517	$8.12	0.000%	0.012%
4471	Gasoline Stations	$2,272,512	2.94%	*	$66,714	$1,270,755	$10.87	0.000%	0.016%
4481	Clothing Stores	$1,567,430	1.01%	*	$15,868	$679,575	$7.10	0.000%	0.045%
4482	Shoe Stores	$998,855	5.53%	*	$55,280	$169,939	$6.36	0.001%	0.012%

Table V-29, contd.
Average Cost Impacts on Establishments Affected by OSHA's Proposed Revision to Subparts D and I (per Establishment, by 4-Digit NAICS Code)

NAICS	Industry	Average Receipts per Estab. [a]	Profit Rate [b]		Estimated Profits per Estab.	Estimated Cost of Proposed Rule	Average Cost per Estab.	Ratio of Average Cost to Revenues	Ratio of Average Cost to Profits
4483	Jewelry, Luggage, and Leather Goods Stores	$991,170	5.53%	*	$54,855	$265,861	$8.96	0.001%	0.016%
4511	Sporting Goods, Hobby, and Musical Instrument Stores	$1,382,881	5.53%	*	$76,533	$676,227	$15.72	0.001%	0.021%
4512	Book, Periodical, and Music Stores	$1,331,320	3.00%	*	$39,921	$105,174	$6.01	0.000%	0.015%
4521	Department Stores	$26,975,048	3.00%	*	$808,883	$477,857	$47.93	0.000%	0.006%
4529	Other General Merchandise Stores	$7,905,058	4.26%	*	$336,445	$1,033,178	$28.12	0.000%	0.008%
4531	Florists	$325,333	4.26%	*	$13,846	$76,734	$3.79	0.001%	0.027%
4532	Office Supplies, Stationery, and Gift Stores	$1,065,158	3.60%	*	$38,308	$520,146	$12.61	0.001%	0.033%
4533	Used Merchandise Stores	$541,375	3.60%	*	$19,470	$124,489	$7.05	0.001%	0.036%
4539	Other Miscellaneous Store Retailers	$1,047,095	3.60%	*	$37,658	$552,244	$12.01	0.001%	0.032%
4541	Electronic Shopping and Mail-Order Houses	$8,015,835	3.60%	*	$288,287	$170,599	$10.51	0.000%	0.004%
4542	Vending Machine Operators	$1,345,227	4.05%	*	$54,466	$118,702	$22.58	0.002%	0.041%
4543	Direct Selling Establishments	$1,781,365	4.05%	*	$72,125	$457,551	$17.05	0.001%	0.024%
4811	Scheduled Air Transportation	$27,568,446	4.05%	*	$1,116,202	$926,907	$301.73	0.001%	0.027%
4812	Nonscheduled Air Transportation	$4,983,338	2.98%	*	$148,442	$101,159	$39.86	0.001%	0.027%
4831	Deep Sea, Coastal, and Great Lakes Water Transportation	$18,563,075	2.98%	*	$552,951	$45,603	$36.14	0.000%	0.007%
4832	Inland Water Transportation	$7,369,971	6.58%	*	$485,071	$18,907	$28.52	0.000%	0.006%
4841	General Freight Trucking	$2,179,183	6.58%	*	$143,428	$1,119,434	$16.63	0.001%	0.012%
4842	Specialized Freight Trucking	$1,336,656	2.80%	*	$37,432	$630,691	$11.91	0.001%	0.032%
4851	Urban Transit Systems	$3,163,984	2.80%	*	$88,604	$24,900	$27.30	0.001%	0.031%

Table V-29, contd.
Average Cost Impacts on Establishments Affected by OSHA's Proposed Revision to Subparts D and I (per Establishment, by 4-Digit NAICS Code)

NAICS	Industry	Average Receipts per Estab. [a]	Profit Rate [b]		Estimated Profits per Estab.	Estimated Cost of Proposed Rule	Average Cost per Estab.	Ratio of Average Cost to Revenues	Ratio of Average Cost to Profits
4852	Interurban and Rural Bus Transportation	$2,292,160	2.52%	*	$57,747	$10,808	$22.75	0.001%	0.039%
4853	Taxi and Limousine Service	$758,126	2.52%	*	$19,100	$52,588	$7.50	0.001%	0.039%
4854	School and Employee Bus Transportation	$1,780,332	2.52%	*	$44,853	$83,789	$19.39	0.001%	0.043%
4855	Charter Bus Industry	$1,629,704	2.52%	*	$41,058	$15,603	$12.93	0.001%	0.031%
4859	Other Transit and Ground Passenger Transportation	$1,025,226	2.52%	*	$25,829	$33,135	$10.05	0.001%	0.039%
4861	Pipeline Transportation of Crude Oil	$15,628,109	2.52%	*	$393,726	$19,563	$52.45	0.000%	0.013%
4862	Pipeline Transportation of Natural Gas	$15,036,768	14.28%	*	$2,146,828	$60,854	$44.65	0.000%	0.002%
4869	Other Pipeline Transportation	$9,607,982	14.28%	*	$1,371,750	$31,831	$34.71	0.000%	0.003%
4871	Scenic and Sightseeing Transportation, Land	$1,076,889	14.28%	*	$153,749	$4,432	$6.54	0.001%	0.004%
4872	Scenic and Sightseeing Transportation, Water	$875,903	5.04%	*	$44,151	$13,083	$7.05	0.001%	0.016%
4879	Scenic and Sightseeing Transportation, Other	$2,508,165	5.04%	*	$126,427	$2,385	$12.89	0.001%	0.010%
4881	Support Activities for Air Transportation	$3,432,026	5.04%	**	$172,995	$222,415	$42.99	0.001%	0.025%
4882	Support Activities for Rail Transportation	$3,451,614	3.61%	**	$124,586	$37,877	$39.37	0.001%	0.032%
4883	Support Activities for Water Transportation	$5,519,986	3.61%	**	$199,244	$168,340	$72.22	0.001%	0.036%
4884	Support Activities for Road Transportation	$669,810	3.61%	**	$24,177	$119,519	$12.52	0.002%	0.052%

Table V-29, contd.
Average Cost Impacts on Establishments Affected by OSHA's Proposed Revision to Subparts D and I (per Establishment, by 4-Digit NAICS Code)

NAICS	Industry	Average Receipts per Estab. [a]	Profit Rate [b]		Estimated Profits per Estab.	Estimated Cost of Proposed Rule	Average Cost per Estab.	Ratio of Average Cost to Revenues	Ratio of Average Cost to Profits
4885	Freight Transportation Arrangement	$2,204,247	3.61%	**	$79,562	$151,146	$8.67	0.000%	0.011%
4889	Other Support Activities for Transportation	$2,426,030	3.61%	**	$87,568	$23,097	$14.11	0.001%	0.016%
4921	Couriers	$7,426,946	0.03609507	**	$268,076	$303,054	$34.74	0.000%	0.000%
4922	Local Messengers and Local Delivery	$732,446	0.03609507	**	$26,438	$37,722	$7.45	0.001%	0.000%
4931	Warehousing and Storage	$5,990,263	3.61%	*	$216,219	$385,865	$27.86	0.000%	0.013%
5111	Newspaper, Periodical, Book, and Directory Publishers	$6,508,148	5.03%	*	$327,163	$232,067	$10.05	0.000%	0.003%
5112	Software Publishers	$13,922,013	12.58%	*	$1,751,020	$181,574	$20.77	0.000%	0.001%
5121	Motion Picture and Video Industries	$4,114,085	17.36%	**	$714,192	$125,039	$6.13	0.000%	0.001%
5122	Sound Recording Industries	$3,257,430	6.35%	**	$206,892	$37,945	$10.64	0.000%	0.005%
5151	Radio and Television Broadcasting	$6,128,916	8.41%	*	$515,288	$260,685	$26.31	0.000%	0.005%
5152	Cable and Other Subscription Programming	$35,828,634	7.05%	*	$2,524,246	$298,460	$443.48	0.001%	0.018%
5161	Internet Publishing and Broadcasting	$6,525,331	7.05%	*	$459,731	$24,033	$9.06	0.000%	0.002%
5171	Wired Telecommunications Carriers	$8,279,458	7.40%	*	$612,548	$5,604,552	$206.36	0.002%	0.034%
5172	Wireless Telecommunications Carriers (except Satellite)	$6,135,232	6.69%	*	$410,237	$1,168,143	$96.48	0.002%	0.024%
5173	Telecommunications Resellers	$3,831,183	6.69%	*	$256,175	$26,473	$10.35	0.000%	0.004%
5174	Satellite Telecommunications	$10,533,017	6.69%	*	$704,298	$101,712	$175.06	0.002%	0.025%

Table V-29, contd.
Average Cost Impacts on Establishments Affected by OSHA's Proposed Revision to Subparts D and I (per Establishment, by 4-Digit NAICS Code)

NAICS	Industry	Average Receipts per Estab. [a]	Profit Rate [b]		Estimated Profits per Estab.	Estimated Cost of Proposed Rule	Average Cost per Estab.	Ratio of Average Cost to Revenues	Ratio of Average Cost to Profits
5175	Cable and Other Program Distribution	$13,161,700	6.69%	*	$880,066	$57,476	$11.93	0.000%	0.001%
5179	Other Telecommunications	$6,529,383	6.69%	*	$436,592	$16,831	$31.11	0.000%	0.007%
5181	Internet Service Providers and Web Search Portals	$4,972,021	6.69%	*	$332,458	$31,929	$5.73	0.000%	0.002%
5182	Data Processing, Hosting, and Related Services	$4,799,373	7.45%	*	$357,336	$111,646	$7.24	0.000%	0.002%
5191	Other Information Services	$1,509,730	7.45%	*	$112,406	$35,352	$8.49	0.001%	0.008%
5211	Monetary Authorities - Central Bank	$274,330,879	8.94%	*	$24,526,291	$1,089	$10.08	0.000%	0.000%
5221	Depository Credit Intermediation	$6,448,988	15.59%	*	$1,005,509	$518,093	$4.30	0.000%	0.000%
5222	Nondepository Credit Intermediation	$8,333,142	11.43%	*	$952,455	$164,423	$2.77	0.000%	0.000%
5223	Activities Related to Credit Intermediation	$2,161,669	9.01%	**	$194,793	$148,511	$3.33	0.000%	0.002%
5231	Securities and Commodity Contracts Intermediation and Brokerage	$7,610,676	10.15%	*	$772,655	$200,088	$5.08	0.000%	0.001%
5232	Securities and Commodity Exchanges	$11,417,563	10.11%	*	$1,154,353	$2,392	$5.41	0.000%	0.000%
5239	Other Financial Investment Activities	$3,555,322	10.11%	*	$359,455	$130,398	$2.79	0.000%	0.001%
5241	Insurance Carriers	$42,343,735	28.35%	*	$12,005,312	$229,557	$6.67	0.000%	0.000%
5242	Agencies, Brokerages, and Other Insurance Related Activities	$1,161,943	5.12%	*	$59,462	$243,243	$1.67	0.000%	0.003%
5259	Other Investment Pools and Funds	$10,933,178	5.12%	*	$559,503	$16,682	$5.79	0.000%	0.001%
5311	Lessors of Real Estate	$1,184,281	64.80%	*	$767,398	$714,997	$6.08	0.001%	0.001%

Table V-29, contd.
Average Cost Impacts on Establishments Affected by OSHA's Proposed Revision to Subparts D and I (per Establishment, by 4-Digit NAICS Code)

NAICS	Industry	Average Receipts per Estab. [a]	Profit Rate [b]		Estimated Profits per Estab.	Estimated Cost of Proposed Rule	Average Cost per Estab.	Ratio of Average Cost to Revenues	Ratio of Average Cost to Profits
5312	Offices of Real Estate Agents and Brokers	$984,181	13.34%	*	$131,327	$504,427	$4.42	0.000%	0.003%
5313	Activities Related to Real Estate	$1,005,517	9.66%	*	$97,104	$700,921	$8.57	0.001%	0.009%
5321	Automotive Equipment Rental and Leasing	$3,056,687	13.34%	**	$407,876	$133,343	$9.79	0.000%	0.002%
5322	Consumer Goods Rental	$739,777	3.20%	*	$23,668	$180,606	$5.42	0.001%	0.023%
5323	General Rental Centers	$848,764	4.58%	*	$38,846	$35,075	$6.30	0.001%	0.016%
5324	Commercial and Industrial Machinery and Equipment Rental and Leasing	$3,304,043	4.58%	**	$151,220	$187,489	$13.57	0.000%	0.009%
5331	Lessors of Nonfinancial Intangible Assets (except Copyrighted Works)	$10,332,742	6.44%	*	$665,891	$12,632	$5.41	0.000%	0.001%
5411	Legal Services	$1,165,746	31.10%	**	$362,598	$563,807	$2.98	0.000%	0.001%
5412	Accounting, Tax Preparation, Bookkeeping, and Payroll Services	$970,564	8.85%	**	$85,865	$834,042	$6.87	0.001%	0.008%
5413	Architectural, Engineering, and Related Services	$1,961,884	8.74%	**	$171,563	$1,632,122	$14.16	0.001%	0.008%
5414	Specialized Design Services	$634,257	4.81%	**	$30,491	$190,631	$5.65	0.001%	0.019%
5415	Computer Systems Design and Related Services	$2,016,788	6.41%	**	$129,185	$1,390,080	$12.54	0.001%	0.010%
5416	Management, Scientific, and Technical Consulting Services	$1,228,565	5.96%	**	$73,257	$1,287,287	$8.83	0.001%	0.012%
5417	Scientific Research and Development Services	$8,345,540	7.95%	**	$663,435	$630,663	$36.77	0.000%	0.006%
5418	Advertising and Related Services	$1,814,725	8.66%	**	$157,229	$8,863,546	$225.25	0.012%	0.143%

Table V-29, contd.
Average Cost Impacts on Establishments Affected by OSHA's Proposed Revision to Subparts D and I (per Establishment, by 4-Digit NAICS Code)

NAICS	Industry	Average Receipts per Estab. [a]	Profit Rate [b]		Estimated Profits per Estab.	Estimated Cost of Proposed Rule	Average Cost per Estab.	Ratio of Average Cost to Revenues	Ratio of Average Cost to Profits
5419	Other Professional, Scientific, and Technical Services	$851,957	5.61%	**	$47,759	$453,742	$6.18	0.001%	0.013%
5511	Management of Companies and Enterprises	$8,420,195	7.10%	**	$598,103	$1,802,683	$37.31	0.000%	0.006%
5611	Office Administrative Services	$2,295,927	14.63%	*	$335,934	$335,791	$11.49	0.001%	0.003%
5612	Facilities Support Services	$4,465,124	4.46%	*	$199,148	$152,611	$37.09	0.001%	0.019%
5613	Employment Services	$4,127,040	4.46%	**	$184,069	$2,586,264	$59.42	0.001%	0.032%
5614	Business Support Services	$1,746,545	2.65%	*	$46,248	$355,885	$9.95	0.001%	0.022%
5615	Travel Arrangement and Reservation Services	$1,343,275	4.46%	**	$59,911	$159,990	$6.88	0.001%	0.011%
5616	Investigation and Security Services	$1,631,472	3.73%	*	$60,913	$605,152	$24.45	0.001%	0.040%
5617	Services to Buildings and Dwellings	$549,348	4.46%	*	$24,501	$74,538,994	$422.77	0.077%	1.726%
5619	Other Support Services	$1,737,422	4.46%	*	$77,490	$250,705	$11.68	0.001%	0.015%
5621	Waste Collection	$3,545,148	5.83%	*	$206,626	$155,944	$17.54	0.000%	0.008%
5622	Waste Treatment and Disposal	$5,137,267	4.61%	*	$236,768	$69,946	$25.35	0.000%	0.011%
5629	Remediation and Other Waste Management Services	$1,879,261	4.61%	*	$86,612	$244,801	$29.60	0.002%	0.034%
6111	Elementary and Secondary Schools	$2,394,633	4.61%	**	$110,365	$77,441	$3.76	0.000%	0.003%
6112	Junior Colleges	$3,867,039	8.06%	**	$311,549	$6,069	$6.89	0.000%	0.002%
6113	Colleges, Universities, and Professional Schools	$32,761,430	8.06%	**	$2,639,430	$70,070	$18.10	0.000%	0.001%
6114	Business Schools and Computer and Management Training	$1,247,327	8.06%	**	$100,491	$25,242	$3.53	0.000%	0.004%
6115	Technical and Trade Schools	$1,523,403	8.06%	**	$122,733	$38,362	$4.97	0.000%	0.004%

Table V-29, contd.
Average Cost Impacts on Establishments Affected by OSHA's Proposed Revision to Subparts D and I (per Establishment, by 4-Digit NAICS Code)

NAICS	Industry	Average Receipts per Estab. [a]	Profit Rate [b]		Estimated Profits per Estab.	Estimated Cost of Proposed Rule	Average Cost per Estab.	Ratio of Average Cost to Revenues	Ratio of Average Cost to Profits
6116	Other Schools and Instruction	$410,958	8.06%	**	$33,109	$110,141	$3.09	0.001%	0.009%
6117	Educational Support Services	$1,348,119	8.06%	**	$108,611	$24,695	$3.65	0.000%	0.003%
6211	Offices of Physicians	$1,472,044	8.06%	*	$118,595	$821,133	$3.79	0.000%	0.003%
6212	Offices of Dentists	$710,330	4.45%	*	$31,592	$422,227	$3.39	0.000%	0.011%
6213	Offices of Other Health Practitioners	$436,205	7.34%	*	$32,021	$401,016	$3.38	0.001%	0.011%
6214	Outpatient Care Centers	$2,969,216	8.13%	*	$241,380	$162,662	$5.70	0.000%	0.002%
6215	Medical and Diagnostic Laboratories	$3,068,470	5.71%	*	$175,059	$57,942	$4.80	0.000%	0.003%
6216	Home Health Care Services	$2,162,602	5.46%	*	$118,119	$95,064	$4.41	0.000%	0.004%
6219	Other Ambulatory Health Care Services	$2,971,026	5.46%	*	$162,274	$55,287	$6.33	0.000%	0.004%
6221	General Medical and Surgical Hospitals	$109,940,645	5.46%	**	$6,004,820	$389,670	$73.25	0.000%	0.001%
6222	Psychiatric and Substance Abuse Hospitals	$24,296,943	5.38%	**	$1,307,469	$20,880	$30.84	0.000%	0.002%
6223	Specialty (except Psychiatric and Substance Abuse) Hospitals	$25,662,093	5.38%	**	$1,380,931	$20,093	$23.75	0.000%	0.002%
6231	Nursing Care Facilities	$4,947,927	5.38%	**	$266,258	$163,979	$9.50	0.000%	0.004%
6232	Residential Mental Retardation, Mental Health and Substance Abuse Facilities	$763,353	5.38%	**	$41,078	$144,763	$4.72	0.001%	0.011%
6233	Community Care Facilities for the Elderly	$1,699,891	5.38%	**	$91,475	$98,807	$5.12	0.000%	0.006%
6239	Other Residential Care Facilities	$1,227,379	5.38%	**	$66,048	$34,116	$5.13	0.000%	0.008%
6241	Individual and Family Services	$1,029,718	5.38%	**	$55,411	$169,888	$3.05	0.000%	0.006%

Table V-29, contd.
Average Cost Impacts on Establishments Affected by OSHA's Proposed Revision to Subparts D and I (per Establishment, by 4-Digit NAICS Code)

NAICS	Industry	Average Receipts per Estab. [a]	Profit Rate [b]		Estimated Profits per Estab.	Estimated Cost of Proposed Rule	Average Cost per Estab.	Ratio of Average Cost to Revenues	Ratio of Average Cost to Profits
6242	Community Food and Housing, and Emergency and Other Relief Services	$1,145,759	5.38%	**	$61,656	$49,412	$3.79	0.000%	0.006%
6243	Vocational Rehabilitation Services	$1,452,550	5.38%	**	$78,165	$42,137	$5.02	0.000%	0.006%
6244	Child Day Care Services	$371,692	5.38%	**	$20,002	$188,187	$2.55	0.001%	0.013%
7111	Performing Arts Companies	$1,383,714	5.38%	*	$74,461	$53,885	$5.86	0.000%	0.008%
7112	Spectator Sports	$5,969,303	9.76%	*	$582,501	$38,170	$8.36	0.000%	0.001%
7113	Promoters of Performing Arts, Sports, and Similar Events	$2,195,804	9.76%	*	$214,272	$64,202	$11.11	0.001%	0.005%
7114	Agents and Managers for Artists, Athletes, Entertainers, and Other Public Figures	$1,242,041	9.76%	*	$121,202	$13,899	$3.98	0.000%	0.003%
7115	Independent Artists, Writers, and Performers	$587,069	9.76%	*	$57,288	$71,585	$3.69	0.001%	0.006%
7121	Museums, Historical Sites, and Similar Institutions	$1,414,378	9.76%	**	$138,019	$36,066	$5.09	0.000%	0.004%
7131	Amusement Parks and Arcades	$3,935,750	7.74%	*	$304,532	$31,452	$10.75	0.000%	0.004%
7132	Gambling Industries	$10,415,846	6.33%	*	$659,261	$21,888	$8.42	0.000%	0.001%
7139	Other Amusement and Recreation Industries	$826,561	6.33%	*	$52,316	$326,185	$4.80	0.001%	0.009%
7211	Traveler Accommodation	$2,853,736	6.33%	*	$180,624	$903,898	$16.96	0.001%	0.009%
7212	RV (Recreational Vehicle) Parks and Recreational Camps	$557,840	5.64%	*	$31,484	$42,758	$5.95	0.001%	0.019%
7213	Rooming and Boarding Houses	$592,294	5.64%	*	$33,428	$10,704	$4.77	0.001%	0.014%
7221	Full-Service Restaurants	$878,192	5.64%	*	$49,564	$893,824	$4.19	0.000%	0.008%
7222	Limited-Service Eating Places	$658,733	4.98%	*	$32,787	$703,975	$2.75	0.000%	0.008%

Table V-29, contd.
Average Cost Impacts on Establishments Affected by OSHA's Proposed Revision to Subparts D and I (per Establishment, by 4-Digit NAICS Code)

NAICS	Industry	Average Receipts per Estab. [a]	Profit Rate [b]		Estimated Profits per Estab.	Estimated Cost of Proposed Rule	Average Cost per Estab.	Ratio of Average Cost to Revenues	Ratio of Average Cost to Profits
7223	Special Food Services	$1,113,710	4.98%	*	$55,432	$363,979	$10.87	0.001%	0.020%
7224	Drinking Places (Alcoholic Beverages)	$395,658	4.98%	*	$19,693	$145,102	$3.15	0.001%	0.016%
8111	Automotive Repair and Maintenance	$529,294	4.98%	*	$26,344	$2,990,180	$18.20	0.003%	0.069%
8112	Electronic and Precision Equipment Repair and Maintenance	$1,373,334	3.68%	*	$50,595	$430,165	$32.59	0.002%	0.064%
8113	Commercial and Industrial Machinery and Equipment (except Automotive and Electronic) Repair and Maintenance	$1,112,510	5.17%	*	$57,554	$638,261	$25.96	0.002%	0.045%
8114	Personal and Household Goods Repair and Maintenance	$368,721	5.17%	*	$19,075	$289,608	$12.37	0.003%	0.065%
8121	Personal Care Services	$236,768	5.17%	*	$12,249	$272,065	$2.47	0.001%	0.020%
8122	Death Care Services	$718,757	5.67%	*	$40,779	$129,716	$6.12	0.001%	0.015%
8123	Dry-cleaning and Laundry Services	$577,876	5.67%	*	$32,786	$314,877	$7.45	0.001%	0.023%
8129	Other Personal Services	$499,974	5.67%	*	$28,366	$243,140	$6.69	0.001%	0.024%
8131	Religious Organizations	$541,280	5.67%	*	$30,710	$1,223,875	$7.01	0.001%	0.023%
8132	Grantmaking and Giving Services	$3,430,139	2.55%	*	$87,621	$87,411	$5.43	0.000%	0.006%
8133	Social Advocacy Organizations	$1,059,616	2.55%	*	$27,067	$95,996	$6.73	0.001%	0.025%
8134	Civic and Social Organizations	$572,399	2.55%	*	$14,622	$203,696	$6.65	0.001%	0.045%
8139	Business, Professional, Labor, Political, and Similar Organizations	$1,095,583	2.55%	*	$27,986	$499,011	$7.60	0.001%	0.027%

Table V-29, contd.
Average Cost Impacts on Establishments Affected by OSHA's Proposed Revision to Subparts D and I (per Establishment, by 4-Digit NAICS Code)

NAICS	Industry	Average Receipts per Estab. [a]	Profit Rate [b]	Estimated Profits per Estab.	Estimated Cost of Proposed Rule	Average Cost per Estab.	Ratio of Average Cost to Revenues	Ratio of Average Cost to Profits

[a] Estimated based on 2002 receipts and payroll data from U.S. Census Bureau, *Statistics of U.S. Businesses*, 2002 and payroll data from U.S. Census Bureau, *Statistics of U.S. Businesses*, 2006. Receipts were not available for 2006 at disaggregated industry levels, but were estimated assuming the ratio of receipts to payroll remained unchanged between 2002 and 2006.
[b] Estimated from average of the yearly ratios of net income to total receipts as reported by the U.S. Internal Revenue Service, *Corporation Source Book, 2000 – 2006*. Data were not available at disaggregated levels for all industries; profit rates at more highly aggregated levels are used for such industries.
* Profit rate imputed from corresponding 3-digit NAICS industry.
** Profit rate imputed from corresponding 2-digit NAICS industry.
Source: U.S. Dept. of Labor, OSHA, Directorate of Evaluation and Analysis, Office of Regulatory Analysis, based on ERG, 2007.

BILLING CODE 4510–29–C

OSHA compared the baseline financial data with total annualized incremental costs of compliance by computing compliance costs as a percentage of revenues and profits. This impact assessment for all firms, presented in Tables V–28 and V–29, is considered a screening analysis and is the first step in OSHA's analysis of whether the compliance costs potentially associated with the proposed standard would lead to significant impacts on establishments in the affected industries. The actual impact of the proposed standard on the viability of establishments in a given industry, in a static world, depends, to a significant degree, on the price elasticity of demand for the services sold by establishments in that industry.

Price elasticity refers to the relationship between the price charged for a service and the demand for that service; that is, the more elastic the relationship, the less able is an establishment to pass the costs of compliance through to its customers in the form of a price increase and the more it will have to absorb the costs of compliance from its profits. When demand is inelastic, establishments can recover most of the costs of compliance by raising the prices they charge for that service; under this scenario, profit rates are largely unchanged and the industry remains largely unaffected. Any impacts are primarily on those using the relevant services. On the other hand, when demand is elastic, establishments cannot recover all the costs simply by passing the cost increase through in the form of a price increase; instead, they must absorb some of the increase from their profits. Commonly, this will mean both reductions in the quantity of goods and services produced and in total profits, though the profit rate may remain unchanged. In general, "when an industry is subject to a higher cost, it does not simply swallow it, it raises its price and reduces its output, and in this way shifts a part of the cost to its consumers and a part to its suppliers," in the words of the court in *American Dental Association* v. *Secretary of Labor* (984 F.2d 823, 829 (7th Cir. 1993)).

The court's summary is in accordance with micro-economic theory. In the long run, firms can only remain in business if their profits are adequate to provide a return on investment that assures that investment in the industry will continue. Over time, because of rising real incomes and productivity, firms in most industries are able to assure an adequate profit. As technology and costs change, however, the long-run demand for some products increases and the long-run demand for other products decreases. In the face of rising external costs, firms that otherwise have a profitable line of business may have to increase prices to stay viable. Commonly, increases in prices result in reduced demand, but rarely eliminate all demand for the product. Whether this decrease in the total production of the product results in smaller production for each establishment within the industry, or the closure of some plants within the industry, or a combination of the two, is dependent on the cost and profit structure of individual firms within the industry.

If demand is completely inelastic (*i.e.*, price elasticity is 0), then the impact of compliance costs that are 1 percent of revenues for each firm in the industry would result in a 1 percent increase in the price of the product or service, with no decline in quantity demanded. Such a situation represents an extreme case, but might be correct in situations in which there are few if any substitutes for the product or service in question, or if the products or services of the affected sector account for only a small portion of the income of its consumers.

If the demand is perfectly elastic (*i.e.*, the price elasticity is infinitely large), then no increase in price is possible and before-tax profits would be reduced by an amount equal to the costs of compliance (minus any savings resulting from improved employee health and/or reduced insurance costs) if the industry attempted to keep producing the same amount of goods and services as previously. Under this scenario, if the costs of compliance are such a large percentage of profits that some or all plants in the industry can no longer invest in the industry with hope of an adequate return on investment, then some or all of the firms in the industry will close. This scenario is highly unlikely to occur, however, because it can only arise when there are other goods and services that are, in the eyes of the consumer, perfect substitutes for the goods and services the affected establishments produce.

A common intermediate case would be a price elasticity of one. In this situation, if the costs of compliance amount to 1 percent of revenues, then production would decline by 1 percent and prices would rise by 1 percent. In this case, the industry revenues would stay the same, with somewhat lower production, but similar profit rates (in most situations where the marginal costs of production net of regulatory costs would fall as well). Consumers would, however, get less of the product or the service for their expenditures, and producers would collect lower total profits; this, as the court described in *American Dental Association* v. *Secretary of Labor,* is the more typical case.

If there is a price elasticity of one, the question of economic feasibility is complicated. On the one hand, the industry will certainly not be "eliminated" with the level of costs found in this rulemaking, since under these assumptions the change in total profits is somewhat less than the costs imposed by the regulation. But there is still the question of whether the industry's competitive structure will be significantly altered. For example, given a 20 percent increase in costs, and an elasticity of one, the industry will not be eliminated. However, if the increase in costs is such that all small firms in an industry will have to close, this could reasonably be concluded to have altered its competitive structure. For this reason, when costs are a significant percentage of revenues, OSHA examines the differential costs by size of firm, and other classifications that may be important.

As indicated by the impact estimates shown in Tables V–28 and V–29, OSHA has determined that, for all affected establishments in general industry, revenue impacts will not exceed 0.08 percent for any affected industry group, and that profit impacts will not exceed 1.7 percent for any affected industry group.

The economic impact of the proposal is most likely to consist of a small increase in prices for the goods and services provided by the affected employers of less than 0.02 percent in the majority of cases. It is unlikely that a price increase of the magnitude of 0.02 percent will significantly alter the quantity of goods or services demanded by the public or any other affected customers or intermediaries. If the compliance costs of the proposal can be substantially recouped with such a minimal increase in prices, there may be little effect on profits.

In general, for most establishments, it would be unlikely that none of the compliance costs could be passed along in the form of increased prices. In the event that unusual circumstances may inhibit even a price increase of 0.02 percent, profits in the majority of affected industries would be reduced by a maximum of about 0.1 percent.

In profit-earning entities, compliance costs can generally be expected to be absorbed through a combination of increases in prices or reduction in profits. As discussed above, the extent to which the impacts of cost increases affect prices or profits depends on the price elasticity of demand for the

products or services produced and sold by the entity.

In the case of cost increases that may be incurred due to the requirements of the proposal, all businesses within each of the covered industry sectors would be subject to the same requirements. Thus, to the extent potential price increases correspond to costs associated with achieving compliance with the proposed standards, the elasticity of demand for each entity will approach that faced by the industry as a whole.

Given the small incremental increases in prices potentially resulting from compliance with the proposed standards and the lack of readily available substitutes for the products and services provided by the covered industry sectors, demand is expected to be sufficiently inelastic in each affected industry to enable entities to substantially offset compliance costs through minor price increases without experiencing any significant reduction in total revenues or in net profits.

For the economy as a whole, OSHA expects the economic impact of the proposed rulemaking to be both an increase in the efficiency of production of goods and services and an improvement in the welfare of society. First, as demonstrated by the analysis of costs and benefits associated with compliance with the requirements of the proposed rule, OSHA expects that societal welfare will increase as a result of these standards, as the benefits achieved clearly and strongly justify the relatively small costs necessary. The impacts of the proposal involve net benefits of over $100 million that are achieved in a relatively cost-effective manner.

Second, many of the costs associated with the injuries and fatalities resulting from the risks addressed by the proposal have until now been externalized. That is, the costs incurred by society to protect workers exposed to falls during the production of certain goods and services have not been fully reflected in the prices of those products and services. The costs of production have been partly borne by workers who suffer the consequences associated with the activities causing the risks. To the extent that fewer of these costs are externalized, the price mechanism will enable the market to result in a more efficient allocation of resources. It should be noted that reductions in externalities by themselves do not necessarily increase efficiency or social welfare unless the costs of achieving the reductions are outweighed by the associated benefits.

OSHA concludes that compliance with the requirements of the proposal is economically feasible in every affected industry sector. This conclusion is based on the criteria established by the OSH Act, as interpreted in relevant case law. In general, the courts have held that a standard is economically feasible if there is a reasonable likelihood that the estimated costs of compliance "will not threaten the existence or competitive structure of an industry, even if it does portend disaster for some marginal firms" (*United Steelworkers of America* v. *Marshall,* 647 F.2d 1189, 1272 (DC Cir. 1980)). As demonstrated by the PEA and the supporting evidence, the potential impacts associated with achieving compliance with the proposal fall far within the bounds of economic feasibility in each industry sector.

OSHA does not expect compliance with the requirements of the proposal to threaten the viability of entities, or the existence or competitive structure of any of the affected industry sectors. In addition, based on an analysis of the costs and economic impacts associated with this rulemaking, OSHA preliminarily concludes that the effects of the proposal on international trade, employment, wages, and economic growth for the United States would be negligible.

H. Voluntary Initial Regulatory Flexibility Screening Analysis

The Regulatory Flexibility Act, as amended in 1996 (SBA, 1996), requires the preparation of an Initial Regulatory Flexibility Analysis (IRFA) for certain proposed rules (5 U.S.C. 601–612). Under the provisions of the law, each such analysis shall contain:

1. A description of the impact of the proposed rule on small entities;
2. A description of the reasons why action by the agency is being considered;
3. A succinct statement of the objectives of, and legal basis for, the proposed rule;
4. A description of and, where feasible, an estimate of the number of small entities to which the proposed rule will apply;
5. A description of the projected reporting, recordkeeping and other compliance requirements of the proposed rule, including an estimate of the classes of small entities which will be subject to the requirements and the type of professional skills necessary for preparation of the report or record;
6. An identification, to the extent practicable, of all relevant Federal rules which may duplicate, overlap or conflict with the proposed rule; and
7. A description and discussion of any significant alternatives to the proposed rule which accomplish the stated objectives of applicable statutes and which minimize any significant economic impact of the proposed rule on small entities, including

a. The establishment of differing compliance or reporting requirements or timetables that take into account the resources available to small entities;

b. The clarification, consolidation, or simplification of compliance and reporting requirements under the rule for such small entities;

c. The use of performance rather than design standards;

d. An exemption from coverage of the rule, or any part thereof, for such small entities.

The Regulatory Flexibility Act further states that the required elements of the IRFA may be performed in conjunction with, or as part of, any other agenda or analysis required by any other law if such other analysis satisfies the relevant provisions.

To determine the need for an IRFA, OSHA conducted a voluntary initial regulatory flexibility screening analysis to assess the potential impacts of the proposed standard on affected small entities. On the basis of the screening analysis, presented below, OSHA certifies that the proposed standard will not have a significant economic impact on a substantial number of small entities.

1. Impact of the Proposed Rule on Small Entities

Based on analysis by ERG (ERG, 2007, Ex. 6), OSHA estimated compliance costs and economic impacts for small entities affected by the proposed rule. Tables V–2 and V–3 in section C presented, respectively, the profiles for general industry entities classified as small according to Small Business Administration (SBA) criteria and for entities with fewer than 20 employees. ERG assigned costs to small entities by first determining the per-employee compliance costs for those cost items that are a function of the number of affected employees at a facility, and the per-establishment cost for those items that do not vary with establishment size. ERG then calculated, by industry, the average number of employees for each of the two classes of small entities, multiplied these averages by per-employee compliance cost, and then added the establishment-based cost to determine the average compliance cost for each type of small entity. These statistics, multiplied by the numbers of small entities, produced the total compliance costs in each industry incurred by small entities.

Table V–30 shows the resultant annualized compliance costs by industry sector for SBA-defined small entities, while Table V–31 shows the costs for entities with fewer than 20 employees. Compliance costs for small entities totaled $125.0 million, compared to $173.2 million for all establishments. Compliance costs for the smallest entities totaled $96.0 million.

OSHA calculated the economic impacts of these costs by comparing average compliance costs with average receipts and profits. These calculations are shown in Tables V–32 and V–33, presenting OSHA's preliminary assessment of impacts on small entities and very small entities (fewer than 20 employees). Among SBA-defined small entities, impacts of project compliance costs on profits were less than five percent for all industries, and these impacts were larger than 0.5 percent for only two industries: NAICS 2213, Water, Sewage and Other Systems (0.57 percent); and NAICS 5617, Services to Buildings and Dwellings (1.87 percent). For entities with fewer than 20 employees, compliance costs as a percent of profits were also less than five percent for all industries, and these impacts were larger than one percent for only two industries: NAICS 2213, Water, Sewage and Other Systems (1.24 percent); and NAICS 5617, Services to Buildings and Dwellings (3.34 percent).

BILLING CODE 4510–29–P

Table V-30
Compliance Costs for Small Business Entities Affected by OSHA's Proposed Standard (by 2-Digit NAICS)

		Annualized Compliance Costs								
		§1910.22	§1910.23	§1910.24	§1910.27	§1910.28	§1910.29	§1910.30	§1910.140	
NAICS	Industry Sector	General Requirements	Ladders	Step Bolts and Manhole Steps	Scaffolds	Duty to Have Fall Protection	Fall Protection Systems Criteria and Practices	Training Program	Fall Protection (including Hazard Assessment)	Total
11	Agriculture, Forestry, Fishing, and Hunting	$44,320	$7,847	$0	$0	$0	$0	$17,495	$41,378	$111,040
21	Mining	$28,137	$12,341	$0	$0	$0	$0	$240,434	$98,524	$379,437
22	Utilities	$20,180	$5,026	$1,865,746	$0	$0	$0	$56,977	$40,040	$1,987,968
31-33	Manufacturing	$1,144,778	$333,568	$0	$0	$0	$0	$2,756,002	$1,904,564	$6,138,912
42	Wholesale Trade	$1,630,738	$327,611	$0	$0	$0	$0	$2,595,018	$1,296,956	$5,850,322
44-45	Retail Trade	$1,906,383	$616,411	$0	$0	$0	$0	$2,498,837	$1,877,940	$6,899,571
48-49	Transportation	$558,141	$145,370	$0	$0	$0	$0	$1,341,129	$1,011,811	$3,056,451
51	Information	$321,114	$435,404	$30,550	$0	$0	$0	$5,267,298	$908,393	$6,962,759
52	Finance and Insurance	$204,230	$54,726	$0	$0	$0	$0	$14,395	$250,776	$524,127
53	Real Estate	$347,268	$366,929	$0	$0	$0	$0	$484,815	$384,612	$1,583,624
54	Professional, Scientific, and Technical Services	$1,601,851	$420,845	$0	$0	$79,856	$5,174,143	$1,696,580	$964,081	$9,937,355
55	Management	$24,724	$5,026	$0	$0	$0	$0	$35,130	$31,987	$96,867

Table V-30, contd.
Compliance Costs for Small Business Entities Affected by OSHA's Proposed Standard (by 2-Digit NAICS)

		Annualized Compliance Costs								
		§1910.22	§1910.23	§1910.24	§1910.27	§1910.28	§1910.29	§1910.30	§1910.140	
NAICS	Industry Sector	General Requirements	Ladders	Step Bolts and Manhole Steps	Scaffolds	Duty to Have Fall Protection	Fall Protection Systems Criteria and Practices	Training Program	Fall Protection (including Hazard Assessment)	Total
56	Administrative and Support, Waste Management and Remediation Services	$564,617	$268,409	$0	$69,527,746	$0	$0	$1,005,608	$379,838	$71,746,217
61	Educational Services	$130,892	$34,607	$0	$0	$0	$0	$4,277	$63,758	$233,534
62	Health Care	$1,118,808	$278,694	$0	$0	$0	$0	$114,021	$556,438	$2,067,961
71	Arts, Entertainment, and Recreation	$230,892	$96,531	$29,315	$0	$0	$0	$33,909	$101,196	$491,843
72	Accommodation and Food Services	$723,978	$189,747	$0	$0	$0	$0	$349,905	$460,836	$1,724,466
81	Other Services	$1,178,746	$1,063,825	$0	$0	$0	$0	$2,222,288	$757,542	$5,222,402
Total		**$11,779,799**	**$4,662,917**	**$1,925,610**	**$69,527,746**	**$79,856**	**$5,174,143**	**$20,734,117**	**$11,130,670**	**$125,014,859**

Source: U.S. Dept. of Labor, OSHA, Directorate of Evaluation and Analysis, Office of Regulatory Analysis, 2009, based on ERG, 2007.

Table V-31
Compliance Costs for Very Small Business Entities (fewer than 20 employees) Affected by OSHA's Proposed Standard

		Annualized Compliance Costs								
		§1910.22	§1910.23	§1910.24	§1910.27	§1910.28	§1910.29	§1910.30	§1910.140	
NAICS	Industry Sector	General Requirements	Ladders	Step Bolts and Manhole Steps	Scaffolds	Duty to Have Fall Protection	Fall Protection Systems Criteria and Practices	Training Program	Fall Protection (including Hazard Assessment)	Total
11	Agriculture, Forestry, Fishing, and Hunting	$42,207	$5,397	$0	$0	$0	$0	$12,208	$38,315	$98,127
21	Mining	$26,193	$5,573	$0	$0	$0	$0	$108,575	$61,371	$201,712
22	Utilities	$4,773	$1,170	$95,861	$0	$0	$0	$14,395	$33,666	$149,865
31-33	Manufacturing	$842,816	$52,851	$0	$0	$0	$0	$369,376	$984,331	$2,249,375
42	Wholesale Trade	$1,438,151	$156,645	$0	$0	$0	$0	$1,228,336	$902,479	$3,725,610
44-45	Retail Trade	$1,787,319	$433,098	$0	$0	$0	$0	$1,712,692	$1,672,872	$5,605,981
48-49	Transportation	$498,178	$37,980	$0	$0	$0	$0	$208,546	$673,358	$1,418,062
51	Information	$277,373	$17,574	$26,472	$0	$0	$0	$139,946	$126,608	$587,973
52	Finance and Insurance	$194,290	$45,197	$0	$0	$0	$0	$10,209	$242,632	$492,328
53	Real Estate	$334,043	$243,716	$0	$0	$0	$0	$313,669	$349,113	$1,240,541
54	Professional, Scientific, and Technical Services	$1,507,048	$228,497	$0	$0	$73,490	$2,230,201	$841,622	$786,762	$5,667,620

Table V-31, contd.

Compliance Costs for Very Small Business Entities (fewer than 20 employees) Affected by OSHA's Proposed Standard

		Annualized Compliance Costs								
		§1910.22	§1910.23	§1910.24	§1910.28	§1910.29	§1910.30	§1910.31	§1910.140	
NAICS	Industry Sector	General Requirements	Ladders	Step Bolts and Manhole Steps	Scaffolds	Duty to Have Fall Protection	Fall Protection Systems Criteria and Practices	Training Program	Fall Protection (including Hazard Assessment)	Total
55	Management	$12,578	$882	$0	$0	$0	$0	$6,167	$14,499	$34,125
56	Administrative and Support, Waste Management and Remediation Services	$510,698	$120,415	$0	$65,226,677	$0	$0	$482,432	$294,793	$66,635,015
61	Educational Services	$107,025	$14,316	$0	$0	$0	$0	$1,106	$50,050	$172,497
62	Health Care	$1,010,895	$175,739	$0	$0	$0	$0	$26,731	$478,008	$1,691,373
71	Arts, Entertainment, and Recreation	$204,799	$39,475	$29,315	$0	$0	$0	$12,565	$88,987	$375,142
72	Accommodation and Food Services	$580,222	$72,722	$0	$0	$0	$0	$139,205	$351,019	$1,143,169
81	Other Services	$1,158,124	$834,400	$0	$0	$0	$0	$1,795,842	$700,736	$4,489,102
Total		**$10,536,732**	**$2,485,649**	**$151,648**	**$65,226,677**	**$73,490**	**$2,230,201**	**$7,423,620**	**$7,849,601**	**$95,977,617**

Source: U.S. Dept. of Labor, OSHA, Directorate of Evaluation and Analysis, Office of Regulatory Analysis, 2009, based on ERG, 2007.

Table V-32
Average Cost Impacts on Small Business Entities Affected by OSHA's Proposed Revision to Subparts D and I (per Entity, by 4-Digit NAICS Code)

NAICS	Industry	SBA Employment Size Criterion [a]	Estimated Receipts, 2006 ($1,000)[b]	Entities [c]	Average Receipts per Entity	Profit Rate [d]		Estimated Profits per Entity	Estimated Cost of the Proposed Rule	Average Cost per Entity	Ratio of Average Cost to Revenues	Ratio of Average Cost to Profits
1131	Timber Tract Operations	500	$531,108	391	$1,358,331	4.36%	*	$59,280	$2,728	$6.98	0.001%	0.012%
1132	Forest Nurseries and Gathering of Forest Products	500	$141,119	169	$835,023	4.36%	*	$36,442	$1,366	$8.08	0.001%	0.022%
1133	Logging	500	$9,011,842	9,954	$905,349	4.36%	*	$39,511	$84,096	$8.45	0.001%	0.021%
1141	Fishing	20	$823,465	1,963	$419,493	5.93%	*	$24,896	$11,888	$6.06	0.001%	0.024%
1142	Hunting and Trapping	20	$87,850	331	$265,407	5.93%	*	$15,752	$2,020	$6.10	0.002%	0.039%
1153	Support Activities for Forestry	100	$1,064,696	1,581	$673,432	5.44%	*	$36,632	$10,087	$6.38	0.001%	0.017%
2111	Oil and Gas Extraction	500	$39,201,651	6,513	$6,018,985	14.88%		$895,704	$381,551	$58.58	0.001%	0.007%
2211	Electric Power Generation, Transmission and Distribution	20	$4,870,743	627	$7,768,331	4.44%		$344,881	$119,756	$191.00	0.002%	0.055%
2212	Natural Gas Distribution	20	$3,414,046	360	$9,483,461	2.98%		$282,516	$12,920	$35.89	0.000%	0.013%
2213	Water, Sewage and Other Systems	100	$4,597,701	4,357	$1,055,245	7.06%		$74,502	$1,857,158	$426.25	0.040%	0.572%

Table V-32, contd.
Average Cost Impacts on Small Business Entities Affected by OSHA's Proposed Revision to Subparts D and I (per Entity, by 4-Digit NAICS Code)

NAICS	Industry	SBA Employment Size Criterion [a]	Estimated Receipts, 2006 ($1,000)[b]	Entities [c]	Average Receipts per Entity	Profit Rate [d]		Estimated Profits per Entity	Estimated Cost of the Proposed Rule	Average Cost per Entity	Ratio of Average Cost to Revenues	Ratio of Average Cost to Profits
3111	Animal Food Manufactur-ing	500	$11,586,752	1,153	$10,049,222	4.24%		$426,530	$19,002	$16.48	0.000%	0.004%
3112	Grain and Oilseed Milling	500	$8,565,807	419	$20,443,453	4.24%	*	$867,703	$10,782	$25.73	0.000%	0.003%
3113	Sugar and Confectionery Product Manufactur-ing	500	$6,435,954	1,543	$4,171,065	7.68%		$320,384	$22,510	$14.59	0.000%	0.005%
3114	Fruit and Vegetable Preserving and Specialty Food Manufactur-ing	500	$14,303,459	1,206	$11,860,248	7.01%		$831,558	$27,950	$23.18	0.000%	0.003%
3115	Dairy Product Manufactur-ing	500	$15,799,030	1,008	$15,673,641	2.66%		$416,370	$23,972	$23.78	0.000%	0.006%
3116	Animal Slaughtering and Processing	500	$23,219,378	3,044	$7,627,917	2.41%		$183,595	$47,691	$15.67	0.000%	0.009%
3117	Seafood Product Preparation and Packaging	500	$4,945,815	553	$8,943,608	2.41%	*	$215,262	$9,574	$17.31	0.000%	0.008%
3118	Bakeries and Tortilla Manufacturing	500	$14,144,251	9,170	$1,542,448	10.13%		$156,209	$108,032	$11.78	0.001%	0.008%

Table V-32, contd.
Average Cost Impacts on Small Business Entities Affected by OSHA's Proposed Revision to Subparts D and I (per Entity, by 4-Digit NAICS Code)

NAICS	Industry	SBA Employment Size Criterion [a]	Estimated Receipts, 2006 ($1,000)[b]	Entities [c]	Average Receipts per Entity	Profit Rate [d]		Estimated Profits per Entity	Estimated Cost of the Proposed Rule	Average Cost per Entity	Ratio of Average Cost to Revenues	Ratio of Average Cost to Profits
3119	Other Food Manufacturing	500	$20,940,278	2,627	$7,971,176	5.68%		$452,443	$48,666	$18.53	0.000%	0.004%
3121	Beverage Manufacturing	500	$13,605,357	2,921	$4,657,774	6.64%	*	$309,416	$44,405	$15.20	0.000%	0.005%
3122	Tobacco Manufacturing	500	$1,237,022	80	$15,462,776	14.49%		$2,240,857	$2,252	$28.15	0.000%	0.001%
3131	Fiber, Yarn, and Thread Mills	500	$1,371,306	283	$4,845,605	4.31%	*	$209,048	$5,338	$18.86	0.000%	0.009%
3132	Fabric Mills	500	$5,555,538	1,107	$5,018,553	4.31%	*	$216,510	$20,477	$18.50	0.000%	0.009%
3133	Textile and Fabric Finishing and Fabric Coating Mills	500	$5,296,907	1,281	$4,134,978	4.31%	*	$178,391	$17,147	$13.39	0.000%	0.008%
3141	Textile Furnishings Mills	500	$5,191,592	2,381	$2,180,425	4.56%	*	$99,392	$25,462	$10.69	0.000%	0.011%
3149	Other Textile Product Mills	500	$6,820,309	3,982	$1,712,785	4.56%	*	$78,075	$40,536	$10.18	0.001%	0.013%
3151	Apparel Knitting Mills	500	$1,653,787	467	$3,541,300	3.16%		$111,970	$6,989	$14.97	0.000%	0.013%
3152	Cut and Sew Apparel Manufacturing	500	$17,420,394	9,286	$1,875,985	5.59%		$104,838	$71,419	$7.69	0.000%	0.007%

Table V-32, contd.
Average Cost Impacts on Small Business Entities Affected by OSHA's Proposed Revision to Subparts D and I (per Entity, by 4-Digit NAICS Code)

NAICS	Industry	SBA Employment Size Criterion [a]	Estimated Receipts, 2006 ($1,000)[b]	Entities [c]	Average Receipts per Entity	Profit Rate [d]		Estimated Profits per Entity	Estimated Cost of the Proposed Rule	Average Cost per Entity	Ratio of Average Cost to Revenues	Ratio of Average Cost to Profits
3159	Apparel Accessories and Other Apparel Manufacturing	500	$1,527,633	907	$1,684,270	4.66%		$78,477	$8,576	$9.46	0.001%	0.012%
3161	Leather and Hide Tanning and Finishing	500	$949,620	237	$4,006,835	6.10%	*	$244,271	$2,730	$11.52	0.000%	0.005%
3162	Footwear Manufacturing	500	$702,105	269	$2,610,054	6.10%	*	$159,118	$3,254	$12.10	0.000%	0.008%
3169	Other Leather and Allied Product Manufacturing	500	$1,710,845	815	$2,099,196	6.10%	*	$127,974	$6,867	$8.43	0.000%	0.007%
3211	Sawmills and Wood Preservation	500	$18,409,408	3,705	$4,968,801	4.08%	*	$202,716	$56,625	$15.28	0.000%	0.008%
3212	Veneer, Plywood, and Engineered Wood Product Manufacturing	500	$9,106,834	1,456	$6,254,693	4.08%	*	$255,178	$33,002	$22.67	0.000%	0.009%
3219	Other Wood Product Manufacturing	500	$26,640,305	9,431	$2,824,759	4.08%	*	$115,244	$134,039	$14.21	0.001%	0.012%

Table V-32, contd.
Average Cost Impacts on Small Business Entities Affected by OSHA's Proposed Revision to Subparts D and I (per Entity, by 4-Digit NAICS Code)

NAICS	Industry	SBA Employment Size Criterion [a]	Estimated Receipts, 2006 ($1,000)[b]	Entities [c]	Average Receipts per Entity	Profit Rate [d]		Estimated Profits per Entity	Estimated Cost of the Proposed Rule	Average Cost per Entity	Ratio of Average Cost to Revenues	Ratio of Average Cost to Profits
3221	Pulp, Paper, and Paperboard Mills	750	$48,518,798	271	$179,036,154	3.18%		$5,693,390	$131,803	$486.36	0.000%	0.009%
3222	Converted Paper Product Manufacturing	750	$70,328,911	2,996	$23,474,269	8.01%		$1,880,819	$263,738	$88.03	0.000%	0.005%
3231	Printing and Related Support Activities	500	$55,503,876	31,581	$1,757,509	4.37%	*	$76,839	$373,528	$11.83	0.001%	0.015%
3241	Petroleum and Coal Products Manufacturing	500	$19,354,003	1,049	$18,449,956	7.50%	*	$1,383,966	$90,147	$85.94	0.000%	0.006%
3251	Basic Chemical Manufacturing	500	$16,915,526	1,159	$14,594,931	4.58%		$668,454	$99,591	$85.93	0.001%	0.013%
3252	Resin, Synthetic Rubber, and Artificial Synthetic Fibers and Filaments Manufacturing	500	$48,236,858	719	$67,088,815	8.53%		$5,722,748	$162,725	$226.32	0.000%	0.004%

Table V-32, contd.
Average Cost Impacts on Small Business Entities Affected by OSHA's Proposed Revision to Subparts D and I (per Entity, by 4-Digit NAICS Code)

NAICS	Industry	SBA Employment Size Criterion [a]	Estimated Receipts, 2006 ($1,000)[b]	Entities [c]	Average Receipts per Entity	Profit Rate [d]	Estimated Profits per Entity	Estimated Cost of the Proposed Rule	Average Cost per Entity	Ratio of Average Cost to Revenues	Ratio of Average Cost to Profits
3253	Pesticide, Fertilizer, and Other Agricultural Chemical Manufacturing	500	$4,658,597	622	$7,489,706	11.10% *	$830,989	$32,026	$51.49	0.001%	0.006%
3254	Pharmaceutical and Medicine Manufacturing	500	$15,890,796	1,335	$11,903,218	16.64%	$1,980,224	$53,657	$40.19	0.000%	0.002%
3255	Paint, Coating, and Adhesive Manufacturing	500	$8,749,521	1,422	$6,152,968	5.38%	$331,299	$34,329	$24.14	0.000%	0.007%
3256	Soap, Cleaning Compound, and Toilet Preparation Manufacturing	500	$13,856,749	1,949	$7,109,671	9.21%	$654,480	$63,731	$32.70	0.000%	0.005%
3259	Other Chemical Product and Preparation Manufacturing	500	$13,034,111	2,004	$6,504,047	4.51%	$293,060	$66,174	$33.02	0.001%	0.011%
3261	Plastics Product Manufacturing	500	$55,961,244	9,231	$6,062,317	4.42%	$267,757	$170,232	$18.44	0.000%	0.007%

Table V-32, contd.
Average Cost Impacts on Small Business Entities Affected by OSHA's Proposed Revision to Subparts D and I (per Entity, by 4-Digit NAICS Code)

NAICS	Industry	SBA Employment Size Criterion [a]	Estimated Receipts, 2006 ($1,000)[b]	Entities [c]	Average Receipts per Entity	Profit Rate [d]		Estimated Profits per Entity	Estimated Cost of the Proposed Rule	Average Cost per Entity	Ratio of Average Cost to Revenues	Ratio of Average Cost to Profits
3262	Rubber Product Manufacturing	500	$8,374,986	1,622	$5,163,370	2.59%		$133,689	$30,315	$18.69	0.000%	0.014%
3271	Clay Product and Refractory Manufacturing	500	$3,447,657	1,308	$2,635,824	4.41%		$116,369	$34,863	$26.65	0.001%	0.023%
3272	Glass and Glass Product Manufacturing	500	$4,207,000	1,710	$2,460,234	3.42%		$84,162	$46,124	$26.97	0.001%	0.032%
3273	Cement and Concrete Product Manufacturing	500	$26,116,932	5,045	$5,176,795	6.64%		$343,640	$192,277	$38.11	0.001%	0.011%
3274	Lime and Gypsum Product Manufacturing	500	$842,666	209	$4,031,892	6.64%	*	$267,641	$6,473	$30.97	0.001%	0.012%
3279	Other Nonmetallic Mineral Product Manufacturing	500	$7,926,856	2,789	$2,842,186	5.49%	*	$156,008	$75,270	$26.99	0.001%	0.017%
3311	Iron and Steel Mills and Ferroalloy Manufacturing	750	$40,019,733	687	$58,252,886	4.49%		$2,616,713	$126,517	$184.16	0.000%	0.007%

Table V-32, contd.
Average Cost Impacts on Small Business Entities Affected by OSHA's Proposed Revision to Subparts D and I (per Entity, by 4-Digit NAICS Code)

NAICS	Industry	SBA Employment Size Criterion [a]	Estimated Receipts, 2006 ($1,000)[b]	Entities [c]	Average Receipts per Entity	Profit Rate [d]		Estimated Profits per Entity	Estimated Cost of the Proposed Rule	Average Cost per Entity	Ratio of Average Cost to Revenues	Ratio of Average Cost to Profits
3312	Steel Product Manufacturing from Purchased Steel	1000	$14,283,055	550	$25,969,191	4.49%	*	$1,166,533	$55,385	$100.70	0.000%	0.009%
3313	Alumina and Aluminum Production and Processing	750	$21,968,858	432	$50,853,839	4.46%		$2,270,588	$65,702	$152.09	0.000%	0.007%
3314	Nonferrous Metal (except Aluminum) Production and Processing	750	$18,670,645	726	$25,717,142	4.42%	*	$1,135,418	$64,541	$88.90	0.000%	0.008%
3315	Foundries	500	$10,738,647	1,825	$5,884,190	4.11%		$242,064	$50,629	$27.74	0.000%	0.011%
3321	Forging and Stamping	500	$14,466,604	2,307	$6,270,743	4.71%		$295,042	$56,962	$24.69	0.000%	0.008%
3322	Cutlery and Handtool Manufacturing	500	$4,572,233	1,321	$3,461,191	5.22%		$180,800	$22,601	$17.11	0.000%	0.009%
3323	Architectural and Structural Metals Manufacturing	500	$43,483,975	12,255	$3,548,264	4.70%		$166,905	$216,167	$17.64	0.000%	0.011%

Table V-32, contd.
Average Cost Impacts on Small Business Entities Affected by OSHA's Proposed Revision to Subparts D and I (per Entity, by 4-Digit NAICS Code)

NAICS	Industry	SBA Employment Size Criterion [a]	Estimated Receipts, 2006 ($1,000)[b]	Entities [c]	Average Receipts per Entity	Profit Rate [d]		Estimated Profits per Entity	Estimated Cost of the Proposed Rule	Average Cost per Entity	Ratio of Average Cost to Revenues	Ratio of Average Cost to Profits
3324	Boiler, Tank, and Shipping Container Manufacturing	500	$7,808,394	1,199	$6,512,422	3.58%		$233,378	$27,875	$23.25	0.000%	0.010%
3325	Hardware Manufacturing	500	$2,999,901	682	$4,398,682	5.22%	*	$229,771	$13,200	$19.36	0.000%	0.008%
3326	Spring and Wire Product Manufacturing	500	$5,666,580	1,423	$3,982,136	5.22%	*	$208,012	$27,309	$19.19	0.000%	0.009%
3327	Machine Shops; Turned Product; and Screw, Nut, and Bolt Manufacturing	500	$42,630,968	24,251	$1,757,906	5.80%	*	$101,926	$341,958	$14.10	0.001%	0.014%
3328	Coating, Engraving, Heat Treating, and Allied Activities	500	$14,338,761	5,471	$2,620,866	4.85%		$127,232	$85,446	$15.62	0.001%	0.012%
3329	Other Fabricated Metal Product Manufacturing	500	$20,878,322	5,544	$3,765,931	6.81%		$256,344	$102,786	$18.54	0.000%	0.007%

Table V-32, contd.
Average Cost Impacts on Small Business Entities Affected by OSHA's Proposed Revision to Subparts D and I (per Entity, by 4-Digit NAICS Code)

NAICS	Industry	SBA Employment Size Criterion [a]	Estimated Receipts, 2006 ($1,000)[b]	Entities [c]	Average Receipts per Entity	Profit Rate [d]	Estimated Profits per Entity	Estimated Cost of the Proposed Rule	Average Cost per Entity	Ratio of Average Cost to Revenues	Ratio of Average Cost to Profits
3331	Agriculture, Construction, and Mining Machinery Manufacturing	500	$14,142,378	2,531	$5,587,664	5.10%	$284,927	$55,797	$22.05	0.000%	0.008%
3332	Industrial Machinery Manufacturing	500	$16,139,442	3,546	$4,551,450	5.80%	$263,927	$71,918	$20.28	0.000%	0.008%
3333	Commercial and Service Industry Machinery Manufacturing	500	$9,026,736	2,021	$4,466,470	4.86%	$217,003	$41,662	$20.61	0.000%	0.009%
3334	Ventilation, Heating, Air-Conditioning, and Commercial Refrigeration Equipment Manufacturing	500	$8,642,252	1,383	$6,248,917	4.55%	$284,509	$33,942	$24.54	0.000%	0.009%
3335	Metalworking Machinery Manufacturing	500	$18,464,852	7,751	$2,382,254	5.29%	$126,005	$134,706	$17.38	0.001%	0.014%

Table V-32, contd.
Average Cost Impacts on Small Business Entities Affected by OSHA's Proposed Revision to Subparts D and I (per Entity, by 4-Digit NAICS Code)

NAICS	Industry	SBA Employment Size Criterion [a]	Estimated Receipts, 2006 ($1,000)[b]	Entities [c]	Average Receipts per Entity	Profit Rate [d]	Estimated Profits per Entity	Estimated Cost of the Proposed Rule	Average Cost per Entity	Ratio of Average Cost to Revenues	Ratio of Average Cost to Profits
3336	Engine, Turbine, and Power Transmission Equipment Manufacturing	500	$4,492,745	677	$6,636,256	2.63%	$174,330	$18,613	$27.49	0.000%	0.016%
3339	Other General Purpose Machinery Manufacturing	500	$24,599,462	5,307	$4,635,286	4.58%	$212,127	$112,354	$21.17	0.000%	0.010%
3341	Computer and Peripheral Equipment Manufacturing	1000	$53,748,275	1,253	$42,895,671	9.05%	$3,880,553	$41,810	$33.37	0.000%	0.001%
3342	Communications Equipment Manufacturing	750	$52,345,611	1,614	$32,432,225	4.57%	$1,483,069	$63,324	$39.23	0.000%	0.003%
3343	Audio and Video Equipment Manufacturing	750	$6,489,754	493	$13,163,802	4.52%	$595,164	$9,840	$19.96	0.000%	0.003%
3344	Semiconductor and Other Electronic Component Manufacturing	500	$23,442,895	4,007	$5,850,485	6.60%	$386,424	$90,131	$22.49	0.000%	0.006%

Table V-32, contd.
Average Cost Impacts on Small Business Entities Affected by OSHA's Proposed Revision to Subparts D and I (per Entity, by 4-Digit NAICS Code)

NAICS	Industry	SBA Employment Size Criterion [a]	Estimated Receipts, 2006 ($1,000)[b]	Entities [c]	Average Receipts per Entity	Profit Rate [d]		Estimated Profits per Entity	Estimated Cost of the Proposed Rule	Average Cost per Entity	Ratio of Average Cost to Revenues	Ratio of Average Cost to Profits
3345	Navigational, Measuring, Electromedical, and Control Instruments Manufacturing	500	$20,027,270	4,276	$4,683,646	5.94%		$278,325	$84,502	$19.76	0.000%	0.007%
3346	Manufacturing and Reproducing Magnetic and Optical Media	500	$2,650,560	753	$3,520,000	4.52%	*	$159,147	$10,997	$14.60	0.000%	0.009%
3351	Electric Lighting Equipment Manufacturing	500	$5,477,193	1,060	$5,167,163	4.21%		$217,702	$19,944	$18.82	0.000%	0.009%
3352	Household Appliance Manufacturing	500	$2,582,026	273	$9,457,971	4.21%		$398,482	$5,543	$20.30	0.000%	0.005%
3353	Electrical Equipment Manufacturing	500	$25,859,479	2,027	$12,757,513	7.15%		$911,912	$61,490	$30.34	0.000%	0.003%
3359	Other Electrical Equipment and Component Manufacturing	500	$11,236,380	1,680	$6,688,321	5.41%		$361,993	$39,096	$23.27	0.000%	0.006%

Table V-32, contd.
Average Cost Impacts on Small Business Entities Affected by OSHA's Proposed Revision to Subparts D and I (per Entity, by 4-Digit NAICS Code)

NAICS	Industry	SBA Employment Size Criterion [a]	Estimated Receipts, 2006 ($1,000)[b]	Entities [c]	Average Receipts per Entity	Profit Rate [d]		Estimated Profits per Entity	Estimated Cost of the Proposed Rule	Average Cost per Entity	Ratio of Average Cost to Revenues	Ratio of Average Cost to Profits
3361	Motor Vehicle Manufacturing	1000	$221,822,962	294	$754,499,871	4.87%		$36,715,275	$122,170	$415.54	0.000%	0.001%
3362	Motor Vehicle Body and Trailer Manufacturing	500	$10,954,033	1,790	$6,119,572	2.04%	*	$124,868	$42,268	$23.61	0.000%	0.019%
3363	Motor Vehicle Parts Manufacturing	500	$31,889,932	4,100	$7,778,032	2.04%	*	$158,708	$118,754	$28.96	0.000%	0.018%
3364	Aerospace Product and Parts Manufacturing	1000	$135,707,957	1,280	$106,021,841	2.04%		$2,163,341	$218,357	$170.59	0.000%	0.008%
3365	Railroad Rolling Stock Manufacturing	1000	$8,758,234	156	$56,142,525	4.16%	*	$2,336,926	$15,401	$98.72	0.000%	0.004%
3366	Ship and Boat Building	500	$7,331,514	1,587	$4,619,732	2.72%		$125,786	$146,637	$92.40	0.002%	0.073%
3369	Other Transportation Equipment Manufacturing	500	$3,355,487	930	$3,608,050	5.86%		$211,496	$15,978	$17.18	0.000%	0.008%

Table V-32, contd.
Average Cost Impacts on Small Business Entities Affected by OSHA's Proposed Revision to Subparts D and I (per Entity, by 4-Digit NAICS Code)

NAICS	Industry	SBA Employment Size Criterion [a]	Estimated Receipts, 2006 ($1,000)[b]	Entities [c]	Average Receipts per Entity	Profit Rate [d]		Estimated Profits per Entity	Estimated Cost of the Proposed Rule	Average Cost per Entity	Ratio of Average Cost to Revenues	Ratio of Average Cost to Profits
3371	Household and Institutional Furniture and Kitchen Cabinet Manufacturing	500	$23,902,056	15,751	$1,517,495	6.31%	*	$95,743	$168,098	$10.67	0.001%	0.011%
3372	Office Furniture (including Fixtures) Manufacturing	500	$12,610,030	3,833	$3,289,859	4.54%	*	$149,463	$58,259	$15.20	0.000%	0.010%
3379	Other Furniture Related Product Manufacturing	500	$3,902,416	893	$4,370,007	4.54%	*	$198,535	$13,182	$14.76	0.000%	0.007%
3391	Medical Equipment and Supplies Manufacturing	500	$22,346,188	11,222	$1,991,284	4.54%		$90,467	$148,757	$13.26	0.001%	0.015%
3399	Other Miscellaneous Manufacturing	500	$41,469,547	18,301	$2,265,972	10.77%		$244,024	$247,559	$13.53	0.001%	0.006%

Table V-32, contd.
Average Cost Impacts on Small Business Entities Affected by OSHA's Proposed Revision to Subparts D and I (per Entity, by 4-Digit NAICS Code)

NAICS	Industry	SBA Employment Size Criterion [a]	Estimated Receipts, 2006 ($1,000)[b]	Entities [c]	Average Receipts per Entity	Profit Rate [d]		Estimated Profits per Entity	Estimated Cost of the Proposed Rule	Average Cost per Entity	Ratio of Average Cost to Revenues	Ratio of Average Cost to Profits
4231	Motor Vehicle and Motor Vehicle Parts and Supplies Merchant Wholesalers	100	$67,493,706	16,947	$3,982,634	5.80%		$230,815	$387,697	$22.88	0.001%	0.010%
4232	Furniture and Home Furnishing Merchant Wholesalers	100	$41,018,359	10,534	$3,893,902	2.76%	*	$107,388	$152,635	$14.49	0.000%	0.013%
4233	Lumber and Other Construction Materials Merchant Wholesalers	100	$61,571,212	12,053	$5,108,372	2.90%		$148,349	$286,024	$23.73	0.000%	0.016%
4234	Professional and Commercial Equipment and Supplies Merchant Wholesalers	100	$80,400,547	25,574	$3,143,839	3.04%		$95,623	$600,732	$23.49	0.001%	0.025%

Table V-32, contd.
Average Cost Impacts on Small Business Entities Affected by OSHA's Proposed Revision to Subparts D and I (per Entity, by 4-Digit NAICS Code)

NAICS	Industry	SBA Employment Size Criterion [a]	Estimated Receipts, 2006 ($1,000)[b]	Entities [c]	Average Receipts per Entity	Profit Rate [d]	Estimated Profits per Entity	Estimated Cost of the Proposed Rule	Average Cost per Entity	Ratio of Average Cost to Revenues	Ratio of Average Cost to Profits
4235	Metal and Mineral (except Petroleum) Merchant Wholesalers	100	$53,277,572	7,008	$7,602,393	2.78%	$211,476	$131,605	$18.78	0.000%	0.009%
4236	Electrical and Electronic Goods Merchant Wholesalers	100	$106,184,274	18,906	$5,616,433	2.69%	$151,032	$454,721	$24.05	0.000%	0.016%
4237	Hardware, and Plumbing and Heating Equipment and Supplies Merchant Wholesalers	100	$52,630,025	10,687	$4,924,677	2.28%	$112,133	$272,393	$25.49	0.001%	0.023%
4238	Machinery, Equipment, and Supplies Merchant Wholesalers	100	$157,283,920	41,847	$3,758,547	2.99%	$112,380	$1,163,045	$27.79	0.001%	0.025%

Table V-32, contd.
Average Cost Impacts on Small Business Entities Affected by OSHA's Proposed Revision to Subparts D and I (per Entity, by 4-Digit NAICS Code)

NAICS	Industry	SBA Employment Size Criterion [a]	Estimated Receipts, 2006 ($1,000)[b]	Entities [c]	Average Receipts per Entity	Profit Rate [d]	Estimated Profits per Entity	Estimated Cost of the Proposed Rule	Average Cost per Entity	Ratio of Average Cost to Revenues	Ratio of Average Cost to Profits
4239	Miscellaneous Durable Goods Merchant Wholesalers	100	$113,497,575	30,319	$3,743,447	3.44%	$128,610	$510,009	$16.82	0.000%	0.013%
4241	Paper and Paper Product Merchant Wholesalers	100	$33,943,943	8,831	$3,843,726	2.90%	$111,624	$108,103	$12.24	0.000%	0.011%
4242	Drugs and Druggists' Sundries Merchant Wholesalers	100	$28,512,763	5,771	$4,940,697	2.12%	$104,989	$56,937	$9.87	0.000%	0.009%
4243	Apparel, Piece Goods, and Notions Merchant Wholesalers	100	$56,811,005	14,025	$4,050,696	3.46%	$139,966	$116,564	$8.31	0.000%	0.006%
4244	Grocery and Related Product Wholesalers	100	$147,326,164	26,011	$5,663,995	4.79%	$271,537	$389,833	$14.99	0.000%	0.006%

Table V-32, contd.
Average Cost Impacts on Small Business Entities Affected by OSHA's Proposed Revision to Subparts D and I (per Entity, by 4-Digit NAICS Code)

NAICS	Industry	SBA Employment Size Criterion [a]	Estimated Receipts, 2006 ($1,000)[b]	Entities [c]	Average Receipts per Entity	Profit Rate [d]	Estimated Profits per Entity	Estimated Cost of the Proposed Rule	Average Cost per Entity	Ratio of Average Cost to Revenues	Ratio of Average Cost to Profits
4245	Farm Product Raw Material Merchant Wholesalers	100	$46,454,270	3,917	$11,859,655	2.59%	$307,429	$54,373	$13.88	0.000%	0.005%
4246	Chemical and Allied Products Merchant Wholesalers	100	$38,347,058	8,109	$4,728,950	2.28%	$107,814	$166,388	$20.52	0.000%	0.019%
4247	Petroleum and Petroleum Products Merchant Wholesalers	100	$81,420,533	4,585	$17,758,022	3.16%	$561,910	$129,389	$28.22	0.000%	0.005%
4248	Beer, Wine, and Distilled Alcoholic Beverage Merchant Wholesalers	100	$15,021,979	2,915	$5,153,337	2.00%	$102,904	$47,019	$16.13	0.000%	0.016%
4249	Miscellaneous Nondurable Goods Merchant Wholesalers	100	$79,666,689	24,935	$3,194,974	3.92%	$125,176	$257,694	$10.33	0.000%	0.008%

Table V-32, contd.
Average Cost Impacts on Small Business Entities Affected by OSHA's Proposed Revision to Subparts D and I (per Entity, by 4-Digit NAICS Code)

NAICS	Industry	SBA Employment Size Criterion [a]	Estimated Receipts, 2006 ($1,000)[b]	Entities [c]	Average Receipts per Entity	Profit Rate [d]		Estimated Profits per Entity	Estimated Cost of the Proposed Rule	Average Cost per Entity	Ratio of Average Cost to Revenues	Ratio of Average Cost to Profits
4251	Wholesale Electronic Markets and Agents and Brokers	100	$138,405,824	51,805	$2,671,669	3.18%	*	$85,033	$637,265	$12.30	0.000%	0.014%
4411	Automobile Dealers	20	$76,660,409	32,728	$2,342,349	7.14%		$167,239	$502,832	$15.36	0.001%	0.009%
4412	Other Motor Vehicle Dealers	100	$48,556,697	15,119	$3,211,634	1.18%	**	$37,933	$341,166	$22.57	0.001%	0.059%
4413	Automotive Parts, Accessories, and Tire Stores	100	$46,568,390	33,491	$1,390,475	2.78%	*	$38,613	$607,418	$18.14	0.001%	0.047%
4421	Furniture Stores	100	$32,587,738	20,814	$1,565,664	1.45%	*	$22,640	$205,855	$9.89	0.001%	0.044%
4422	Home Furnishings Stores	100	$40,222,908	26,848	$1,498,171	3.63%	*	$54,429	$324,363	$12.08	0.001%	0.022%
4431	Electronics and Appliance Stores	20	$20,267,091	29,639	$683,798	3.63%	*	$24,843	$342,454	$11.55	0.002%	0.047%
4441	Building Material and Supplies Dealers	100	$87,061,081	45,150	$1,928,263	3.52%	*	$67,875	$653,791	$14.48	0.001%	0.021%

Table V-32, contd.
Average Cost Impacts on Small Business Entities Affected by OSHA's Proposed Revision to Subparts D and I (per Entity, by 4-Digit NAICS Code)

NAICS	Industry	SBA Employment Size Criterion [a]	Estimated Receipts, 2006 ($1,000)[b]	Entities [c]	Average Receipts per Entity	Profit Rate [d]		Estimated Profits per Entity	Estimated Cost of the Proposed Rule	Average Cost per Entity	Ratio of Average Cost to Revenues	Ratio of Average Cost to Profits
4442	Lawn and Garden Equipment and Supplies Stores	100	$28,644,941	16,849	$1,700,097	7.87%	**	$133,779	$218,791	$12.99	0.001%	0.010%
4451	Grocery Stores	100	$71,278,538	65,674	$1,085,339	2.20%	*	$23,923	$368,811	$5.62	0.001%	0.023%
4452	Specialty Food Stores	100	$23,618,662	23,118	$1,021,657	2.07%	*	$21,111	$128,451	$5.56	0.001%	0.026%
4453	Beer, Wine, and Liquor Stores	100	$64,409,298	26,694	$2,412,875	2.07%	*	$49,858	$118,858	$4.45	0.000%	0.009%
4461	Health and Personal Care Stores	100	$103,061,742	43,486	$2,369,998	2.34%	*	$55,523	$315,134	$7.25	0.000%	0.013%
4471	Gasoline Stations	100	$175,379,922	66,667	$2,630,686	2.94%	*	$77,229	$669,222	$10.04	0.000%	0.013%
4481	Clothing Stores	100	$40,540,430	40,472	$1,001,691	1.01%	*	$10,141	$279,768	$6.91	0.001%	0.068%
4482	Shoe Stores	100	$8,163,382	6,628	$1,231,651	5.53%	*	$68,164	$42,141	$6.36	0.001%	0.009%
4483	Jewelry, Luggage, and Leather Goods Stores	100	$33,225,494	19,501	$1,703,784	5.53%	*	$94,293	$161,291	$8.27	0.000%	0.009%
4511	Sporting Goods, Hobby, and Musical Instrument Stores	100	$32,209,320	31,727	$1,015,202	5.53%	*	$56,185	$346,326	$10.92	0.001%	0.019%

Table V-32, contd.
Average Cost Impacts on Small Business Entities Affected by OSHA's Proposed Revision to Subparts D and I (per Entity, by 4-Digit NAICS Code)

NAICS	Industry	SBA Employment Size Criterion [a]	Estimated Receipts, 2006 ($1,000)[b]	Entities [c]	Average Receipts per Entity	Profit Rate [d]		Estimated Profits per Entity	Estimated Cost of the Proposed Rule	Average Cost per Entity	Ratio of Average Cost to Revenues	Ratio of Average Cost to Profits
4512	Book, Periodical, and Music Stores	100	$7,011,457	9,324	$751,979	3.00%	*	$22,549	$54,134	$5.81	0.001%	0.026%
4521	Department Stores	100	$664,966	310	$2,145,052	3.00%	*	$64,322	$2,518	$8.12	0.000%	0.013%
4529	Other General Merchandise Stores	100	$6,617,747	10,142	$652,509	4.26%	*	$27,771	$98,639	$9.73	0.001%	0.035%
4531	Florists	100	$13,839,926	19,337	$715,722	4.26%	*	$30,462	$73,313	$3.79	0.001%	0.012%
4532	Office Supplies, Stationery, and Gift Stores	500	$17,156,929	29,601	$579,606	3.60%	*	$20,845	$306,121	$10.34	0.002%	0.050%
4533	Used Merchandise Stores	100	$9,049,563	12,837	$704,959	3.60%	*	$25,354	$78,142	$6.09	0.001%	0.024%
4539	Other Miscellaneous Store Retailers	100	$59,007,366	36,894	$1,599,376	3.60%	*	$57,521	$402,323	$10.90	0.001%	0.019%
4541	Electronic Shopping and Mail-Order Houses	100	$24,332,706	14,640	$1,662,070	3.60%	*	$59,776	$106,603	$7.28	0.000%	0.012%
4542	Vending Machine Operators	100	$3,932,387	4,584	$857,851	4.05%	*	$34,733	$70,639	$15.41	0.002%	0.044%

Table V-32, contd.
Average Cost Impacts on Small Business Entities Affected by OSHA's Proposed Revision to Subparts D and I (per Entity, by 4-Digit NAICS Code)

NAICS	Industry	SBA Employment Size Criterion [a]	Estimated Receipts, 2006 ($1,000)[b]	Entities [c]	Average Receipts per Entity	Profit Rate [d]		Estimated Profits per Entity	Estimated Cost of the Proposed Rule	Average Cost per Entity	Ratio of Average Cost to Revenues	Ratio of Average Cost to Profits
4543	Direct Selling Establishments	20	$17,714,226	19,468	$909,915	4.05%	*	$36,841	$222,184	$11.41	0.001%	0.031%
4811	Scheduled Air Transportation	1500	$82,476,027	537	$153,586,642	4.05%	*	$6,218,478	$830,899	$1,547.30	0.001%	0.025%
4812	Nonscheduled Air Transportation	1500	$12,469,634	2,342	$5,324,353	2.98%	*	$158,600	$97,707	$41.72	0.001%	0.026%
4831	Deep Sea, Coastal, and Great Lakes Water Transportation	20	$7,219,700	826	$8,740,557	2.98%	*	$260,361	$23,583	$28.55	0.000%	0.011%
4832	Inland Water Transportation	500	$2,203,565	563	$3,913,969	6.58%	*	$257,606	$12,436	$22.09	0.001%	0.009%
4841	General Freight Trucking	500	$66,802,656	56,935	$1,173,314	6.58%	*	$77,224	$724,903	$12.73	0.001%	0.016%
4842	Specialized Freight Trucking	500	$51,583,669	48,733	$1,058,496	2.80%	*	$29,642	$547,555	$11.24	0.001%	0.038%
4851	Urban Transit Systems	100	$266,539	533	$500,073	2.80%	*	$14,004	$7,178	$13.47	0.003%	0.096%
4852	Interurban and Rural Bus Transportation	100	$145,946	195	$748,442	2.52%	*	$18,856	$2,989	$15.33	0.002%	0.081%

Table V-32, contd.
Average Cost Impacts on Small Business Entities Affected by OSHA's Proposed Revision to Subparts D and I (per Entity, by 4-Digit NAICS Code)

NAICS	Industry	SBA Employment Size Criterion [a]	Estimated Receipts, 2006 ($1,000)[b]	Entities [c]	Average Receipts per Entity	Profit Rate [d]		Estimated Profits per Entity	Estimated Cost of the Proposed Rule	Average Cost per Entity	Ratio of Average Cost to Revenues	Ratio of Average Cost to Profits
4853	Taxi and Limousine Service	500	$4,421,967	6,894	$641,423	2.52%	*	$16,160	$48,685	$7.06	0.001%	0.044%
4854	School and Employee Bus Transportation	100	$994,731	2,788	$356,790	2.52%	*	$8,989	$31,831	$11.42	0.003%	0.127%
4855	Charter Bus Industry	500	$1,513,013	1,087	$1,391,916	2.52%	*	$35,067	$13,042	$12.00	0.001%	0.034%
4859	Other Transit and Ground Passenger Transportation	500	$2,495,769	2,974	$839,196	2.52%	*	$21,142	$28,189	$9.48	0.001%	0.045%
4861	Pipeline Transportation of Crude Oil	1500	$5,690,561	55	$103,464,750	2.52%	*	$2,606,634	$13,721	$249.47	0.000%	0.010%
4862	Pipeline Transportation of Natural Gas	500	$2,699,151	87	$31,024,724	14.28%	*	$4,429,459	$4,587	$52.73	0.000%	0.001%
4869	Other Pipeline Transportation	500	$537,344	50	$10,746,871	14.28%	*	$1,534,351	$2,326	$46.52	0.000%	0.003%
4871	Scenic and Sightseeing Transportation, Land	500	$526,584	609	$864,670	14.28%	*	$123,451	$3,918	$6.43	0.001%	0.005%

Table V-32, contd.
Average Cost Impacts on Small Business Entities Affected by OSHA's Proposed Revision to Subparts D and I (per Entity, by 4-Digit NAICS Code)

NAICS	Industry	SBA Employment Size Criterion [a]	Estimated Receipts, 2006 ($1,000)[b]	Entities [c]	Average Receipts per Entity	Profit Rate [d]		Estimated Profits per Entity	Estimated Cost of the Proposed Rule	Average Cost per Entity	Ratio of Average Cost to Revenues	Ratio of Average Cost to Profits
4872	Scenic and Sightseeing Transportation, Water	500	$1,050,400	1,819	$577,460	5.04%	*	$29,108	$12,714	$6.99	0.001%	0.024%
4879	Scenic and Sightseeing Transportation, Other	100	$1,437,311	172	$8,356,457	5.04%	*	$421,217	$2,067	$12.02	0.000%	0.003%
4881	Support Activities for Air Transportation	100	$4,378,170	3,655	$1,197,858	5.04%	**	$60,379	$68,700	$18.80	0.002%	0.031%
4882	Support Activities for Rail Transportation	100	$669,617	428	$1,564,525	3.61%	**	$56,472	$10,063	$23.51	0.002%	0.042%
4883	Support Activities for Water Transportation	100	$2,453,950	1,680	$1,460,685	3.61%	**	$52,724	$39,977	$23.80	0.002%	0.045%
4884	Support Activities for Road Transportation	100	$6,329,358	8,748	$723,521	3.61%	**	$26,116	$99,648	$11.39	0.002%	0.044%

Table V-32, contd.
Average Cost Impacts on Small Business Entities Affected by OSHA's Proposed Revision to Subparts D and I (per Entity, by 4-Digit NAICS Code)

NAICS	Industry	SBA Employment Size Criterion [a]	Estimated Receipts, 2006 ($1,000)[b]	Entities [c]	Average Receipts per Entity	Profit Rate [d]		Estimated Profits per Entity	Estimated Cost of the Proposed Rule	Average Cost per Entity	Ratio of Average Cost to Revenues	Ratio of Average Cost to Profits
4885	Freight Transportation Arrangement	100	$18,658,005	12,524	$1,489,780	3.61%	**	$53,774	$101,741	$8.12	0.001%	0.015%
4889	Other Support Activities for Transportation	100	$1,035,182	1,459	$709,514	3.61%	**	$25,610	$14,449	$9.90	0.001%	0.039%
4921	Couriers	1500	$63,131,495	3,577	$17,649,286	3.61%	**	$637,052	$228,529	$63.89	0.000%	0.010%
4922	Local Messengers and Local Delivery	500	$2,806,493	4,492	$624,776	3.61%	**	$22,551	$33,214	$7.39	0.001%	0.033%
4931	Warehousing and Storage	100	$6,281,678	5,029	$1,249,091	3.61%	*	$45,086	$78,855	$15.68	0.001%	0.035%
5111	Newspaper, Periodical, Book, and Directory Publishers	500	$35,343,446	16,475	$2,145,277	5.03%	*	$107,843	$129,956	$7.89	0.000%	0.007%
5112	Software Publishers	500	$21,389,021	5,959	$3,589,364	12.58%	*	$451,447	$81,058	$13.60	0.000%	0.003%
5121	Motion Picture and Video Industries	500	$21,590,603	16,854	$1,281,037	17.36%	**	$222,384	$100,740	$5.98	0.000%	0.003%
5122	Sound Recording Industries	100	$3,196,164	3,271	$977,122	6.35%	**	$62,061	$29,540	$9.03	0.001%	0.015%

Table V-32, contd.
Average Cost Impacts on Small Business Entities Affected by OSHA's Proposed Revision to Subparts D and I (per Entity, by 4-Digit NAICS Code)

NAICS	Industry	SBA Employment Size Criterion [a]	Estimated Receipts, 2006 ($1,000)[b]	Entities [c]	Average Receipts per Entity	Profit Rate [d]		Estimated Profits per Entity	Estimated Cost of the Proposed Rule	Average Cost per Entity	Ratio of Average Cost to Revenues	Ratio of Average Cost to Profits
5151	Radio and Television Broadcasting	20	$1,953,574	3,564	$548,141	8.41%	*	$46,085	$45,001	$12.63	0.002%	0.027%
5152	Cable and Other Subscription Programming	500	$2,631,070	355	$7,411,465	7.05%	*	$522,162	$56,537	$159.26	0.002%	0.030%
5161	Internet Publishing and Broadcasting	500	$7,055,534	2,310	$3,054,344	7.05%	*	$215,189	$20,926	$9.06	0.000%	0.004%
5171	Wired Telecommunications Carriers	1500	$219,175,789	2,515	$87,147,431	7.40%	*	$6,447,517	$5,177,369	$2,058.60	0.002%	0.032%
5172	Wireless Telecommunications Carriers (except Satellite)	1500	$72,464,427	2,516	$28,801,441	6.69%	*	$1,925,829	$1,032,537	$410.39	0.001%	0.021%
5173	Telecommunications Resellers	1500	$9,724,163	2,278	$4,268,728	6.69%	*	$285,432	$23,585	$10.35	0.000%	0.004%
5174	Satellite Telecommunications	1000	$5,833,356	434	$13,440,913	6.69%	*	$898,736	$95,578	$220.23	0.002%	0.025%
5175	Cable and Other Program Distribution	1000	$57,921,997	1,141	$50,764,239	6.69%	*	$3,394,387	$13,617	$11.93	0.000%	0.000%

Table V-32, contd.
Average Cost Impacts on Small Business Entities Affected by OSHA's Proposed Revision to Subparts D and I (per Entity, by 4-Digit NAICS Code)

NAICS	Industry	SBA Employment Size Criterion [a]	Estimated Receipts, 2006 ($1,000)[b]	Entities [c]	Average Receipts per Entity	Profit Rate [d]		Estimated Profits per Entity	Estimated Cost of the Proposed Rule	Average Cost per Entity	Ratio of Average Cost to Revenues	Ratio of Average Cost to Profits
5179	Other Telecommunications	1000	$3,318,847	439	$7,560,016	6.69%	*	$505,506	$14,662	$33.40	0.000%	0.007%
5181	Internet Service Providers and Web Search Portals	1000	$25,874,451	4,907	$5,272,967	6.69%	*	$352,581	$28,118	$5.73	0.000%	0.002%
5182	Data Processing, Hosting, and Related Services	1000	$69,257,352	7,545	$9,179,238	7.45%	*	$683,437	$59,256	$7.85	0.000%	0.001%
5191	Other Information Services	1000	$5,983,256	3,278	$1,825,276	7.45%	*	$135,900	$27,940	$8.52	0.000%	0.006%
5211	Monetary Authorities - Central Bank	1000	$27,044,980	69	$391,956,231	8.94%	*	$35,042,473	$904	$13.10	0.000%	0.000%
5221	Depository Credit Intermediation	20	$11,350,517	7,957	$1,426,482	15.59%	*	$222,413	$33,848	$4.25	0.000%	0.002%
5222	Nondepository Credit Intermediation	100	$30,297,739	23,383	$1,295,717	11.43%	*	$148,097	$64,301	$2.75	0.000%	0.002%

Table V-32, contd.
Average Cost Impacts on Small Business Entities Affected by OSHA's Proposed Revision to Subparts D and I (per Entity, by 4-Digit NAICS Code)

NAICS	Industry	SBA Employment Size Criterion [a]	Estimated Receipts, 2006 ($1,000)[b]	Entities [c]	Average Receipts per Entity	Profit Rate [d]		Estimated Profits per Entity	Estimated Cost of the Proposed Rule	Average Cost per Entity	Ratio of Average Cost to Revenues	Ratio of Average Cost to Profits
5223	Activities Related to Credit Intermediation	20	$12,461,500	26,458	$470,992	9.01%	**	$42,442	$87,199	$3.30	0.001%	0.008%
5231	Securities and Commodity Contracts Intermediation and Brokerage	100	$21,135,025	12,818	$1,648,855	10.15%	*	$167,396	$64,887	$5.06	0.000%	0.003%
5232	Securities and Commodity Exchanges	100	$410,538	121	$3,392,876	10.11%	*	$343,031	$587	$4.85	0.000%	0.001%
5239	Other Financial Investment Activities	100	$61,324,608	40,791	$1,503,386	10.11%	*	$151,997	$112,593	$2.76	0.000%	0.002%
5241	Insurance Carriers	100	$23,958,122	6,794	$3,526,365	28.35%	*	$999,796	$25,116	$3.70	0.000%	0.000%
5242	Agencies, Brokerages, and Other Insurance Related Activities	20	$51,888,775	125,791	$412,500	5.12%	*	$21,110	$198,180	$1.58	0.000%	0.007%
5259	Other Investment Pools and Funds	20	$4,409,909	1,957	$2,253,403	5.12%	*	$115,317	$6,908	$3.53	0.00%	0.003%

Table V-32, contd.
Average Cost Impacts on Small Business Entities Affected by OSHA's Proposed Revision to Subparts D and I (per Entity, by 4-Digit NAICS Code)

NAICS	Industry	SBA Employment Size Criterion [a]	Estimated Receipts, 2006 ($1,000)[b]	Entities [c]	Average Receipts per Entity	Profit Rate [d]		Estimated Profits per Entity	Estimated Cost of the Proposed Rule	Average Cost per Entity	Ratio of Average Cost to Revenues	Ratio of Average Cost to Profits
5311	Lessors of Real Estate	100	$148,693,866	96,670	$1,538,159	64.80%	*	$996,706	$524,319	$5.42	0.000%	0.001%
5312	Offices of Real Estate Agents and Brokers	100	$143,390,526	104,985	$1,365,819	13.34%	*	$182,251	$431,345	$4.11	0.000%	0.002%
5313	Activities Related to Real Estate	100	$49,114,760	70,681	$694,879	9.66%	*	$67,105	$467,072	$6.61	0.001%	0.010%
5321	Automotive Equipment Rental and Leasing	500	$8,801,407	4,637	$1,898,082	13.34%	**	$253,275	$33,683	$7.26	0.000%	0.003%
5322	Consumer Goods Rental	100	$8,493,082	12,468	$681,190	3.20%	*	$21,794	$64,736	$5.19	0.001%	0.024%
5323	General Rental Centers	100	$3,472,807	3,274	$1,060,723	4.58%	*	$48,548	$21,450	$6.55	0.001%	0.013%
5324	Commercial and Industrial Machinery and Equipment Rental and Leasing	100	$13,912,374	8,257	$1,684,919	4.58%	**	$77,116	$83,017	$10.05	0.001%	0.013%

Table V-32, contd.
Average Cost Impacts on Small Business Entities Affected by OSHA's Proposed Revision to Subparts D and I (per Entity, by 4-Digit NAICS Code)

NAICS	Industry	SBA Employment Size Criterion [a]	Estimated Receipts, 2006 ($1,000)[b]	Entities [c]	Average Receipts per Entity	Profit Rate [d]		Estimated Profits per Entity	Estimated Cost of the Proposed Rule	Average Cost per Entity	Ratio of Average Cost to Revenues	Ratio of Average Cost to Profits
5331	Lessors of Nonfinancial Intangible Assets (except Copyrighted Works)	100	$5,109,465	2,042	$2,502,187	6.44%	*	$161,253	$8,080	$3.96	0.000%	0.002%
5411	Legal Services	100	$150,407,808	179,461	$838,109	31.10%	**	$260,688	$527,647	$2.94	0.000%	0.001%
5412	Accounting, Tax Preparation, Bookkeeping, and Payroll Services	500	$55,823,703	106,052	$526,380	8.85%	**	$46,569	$589,466	$5.56	0.001%	0.012%
5413	Architectural, Engineering, and Related Services	100	$89,596,342	98,506	$909,552	8.74%	**	$79,539	$980,971	$9.96	0.001%	0.013%
5414	Specialized Design Services	100	$33,873,907	33,315	$1,016,776	4.81%	**	$48,880	$179,903	$5.40	0.001%	0.011%
5415	Computer Systems Design and Related Services	500	$109,021,615	99,612	$1,094,463	6.41%	**	$70,105	$918,931	$9.23	0.001%	0.013%

Table V-32, contd.
Average Cost Impacts on Small Business Entities Affected by OSHA's Proposed Revision to Subparts D and I (per Entity, by 4-Digit NAICS Code)

NAICS	Industry	SBA Employment Size Criterion [a]	Estimated Receipts, 2006 ($1,000)[b]	Entities [c]	Average Receipts per Entity	Profit Rate [d]		Estimated Profits per Entity	Estimated Cost of the Proposed Rule	Average Cost per Entity	Ratio of Average Cost to Revenues	Ratio of Average Cost to Profits
5416	Management, Scientific, and Technical Consulting Services	100	$116,817,864	135,799	$860,226	5.96%	**	$51,294	$848,572	$6.25	0.001%	0.012%
5417	Scientific Research and Development Services	100	$16,619,186	12,136	$1,369,412	7.95%	**	$108,862	$151,180	$12.46	0.001%	0.011%
5418	Advertising and Related Services	500	$42,745,283	35,826	$1,193,136	8.66%	**	$103,374	$5,539,209	$154.61	0.013%	0.150%
5419	Other Professional, Scientific, and Technical Services	500	$46,378,040	64,641	$717,471	5.61%	**	$40,220	$379,287	$5.87	0.001%	0.015%
5511	Management of Companies and Enterprises	100	$14,653,568	11,297	$1,297,120	7.10%	**	$92,137	$103,314	$9.15	0.001%	0.010%
5611	Office Administrative Services	100	$21,925,853	23,645	$927,293	14.63%	*	$135,679	$167,414	$7.08	0.001%	0.005%
5612	Facilities Support Services	500	$3,877,864	1,461	$2,654,253	4.46%	*	$118,382	$40,177	$27.50	0.001%	0.023%

Table V-32, contd.
Average Cost Impacts on Small Business Entities Affected by OSHA's Proposed Revision to Subparts D and I (per Entity, by 4-Digit NAICS Code)

NAICS	Industry	SBA Employment Size Criterion [a]	Estimated Receipts, 2006 ($1,000)[b]	Entities [c]	Average Receipts per Entity	Profit Rate [d]		Estimated Profits per Entity	Estimated Cost of the Proposed Rule	Average Cost per Entity	Ratio of Average Cost to Revenues	Ratio of Average Cost to Profits
5613	Employment Services	100	$13,844,990	19,487	$710,473	4.46%	**	$31,688	$228,204	$11.71	0.002%	0.037%
5614	Business Support Services	100	$18,314,840	28,919	$633,315	2.65%	*	$16,770	$167,942	$5.81	0.001%	0.035%
5615	Travel Arrangement and Reservation Services	100	$11,342,569	17,100	$663,308	4.46%	**	$29,584	$88,099	$5.15	0.001%	0.017%
5616	Investigation and Security Services	100	$9,473,574	18,290	$517,965	3.73%	*	$19,339	$176,851	$9.67	0.002%	0.050%
5617	Services to Buildings and Dwellings	100	$84,494,650	167,989	$502,977	4.46%	*	$22,433	$70,582,840	$420.16	0.084%	1.873%
5619	Other Support Services	100	$19,053,604	18,548	$1,027,259	4.46%	*	$45,817	$126,868	$6.84	0.001%	0.015%
5621	Waste Collection	500	$11,910,526	7,107	$1,675,887	5.83%	*	$97,678	$84,606	$11.90	0.001%	0.012%
5622	Waste Treatment and Disposal	100	$2,168,577	1,448	$1,497,636	4.61%	*	$69,023	$20,638	$14.25	0.001%	0.021%
5629	Remediation and Other Waste Management Services	100	$7,368,741	7,317	$1,007,071	4.61%	*	$46,414	$150,812	$20.61	0.002%	0.044%

Table V-32, contd.
Average Cost Impacts on Small Business Entities Affected by OSHA's Proposed Revision to Subparts D and I (per Entity, by 4-Digit NAICS Code)

NAICS	Industry	SBA Employment Size Criterion [a]	Estimated Receipts, 2006 ($1,000)[b]	Entities [c]	Average Receipts per Entity	Profit Rate [d]		Estimated Profits per Entity	Estimated Cost of the Proposed Rule	Average Cost per Entity	Ratio of Average Cost to Revenues	Ratio of Average Cost to Profits
6111	Elementary and Secondary Schools	100	$13,045,206	16,071	$811,723	4.61%	**	$37,411	$57,759	$3.59	0.000%	0.010%
6112	Junior Colleges	500	$1,640,791	416	$3,944,210	8.06%	**	$317,766	$2,680	$6.44	0.000%	0.002%
6113	Colleges, Universities, and Professional Schools	100	$1,256,030	1,153	$1,089,358	8.06%	**	$87,764	$6,173	$5.35	0.000%	0.006%
6114	Business Schools and Computer and Management Training	100	$5,368,843	6,453	$831,992	8.06%	**	$67,030	$22,554	$3.50	0.000%	0.005%
6115	Technical and Trade Schools	500	$6,510,845	6,540	$995,542	8.06%	**	$80,206	$31,564	$4.83	0.000%	0.006%
6116	Other Schools and Instruction	100	$13,043,619	33,336	$391,277	8.06%	**	$31,523	$102,568	$3.08	0.001%	0.010%
6117	Educational Support Services	100	$4,730,609	5,912	$800,171	8.06%	**	$64,466	$21,496	$3.64	0.000%	0.006%
6211	Offices of Physicians	100	$237,249,455	188,192	$1,260,678	8.06%	*	$101,567	$708,463	$3.76	0.000%	0.004%
6212	Offices of Dentists	100	$282,300,729	119,272	$2,366,865	4.45%	*	$105,266	$404,309	$3.39	0.000%	0.003%

Table V-32, contd.
Average Cost Impacts on Small Business Entities Affected by OSHA's Proposed Revision to Subparts D and I (per Entity, by 4-Digit NAICS Code)

NAICS	Industry	SBA Employment Size Criterion [a]	Estimated Receipts, 2006 ($1,000)[b]	Entities [c]	Average Receipts per Entity	Profit Rate [d]		Estimated Profits per Entity	Estimated Cost of the Proposed Rule	Average Cost per Entity	Ratio of Average Cost to Revenues	Ratio of Average Cost to Profits
6213	Offices of Other Health Practitioners	100	$89,805,624	108,034	$831,272	7.34%	*	$61,022	$364,218	$3.37	0.000%	0.006%
6214	Outpatient Care Centers	500	$32,976,557	13,215	$2,495,388	8.13%	*	$202,861	$76,510	$5.79	0.000%	0.003%
6215	Medical and Diagnostic Laboratories	500	$18,878,829	7,614	$2,479,489	5.71%	*	$141,457	$36,150	$4.75	0.000%	0.003%
6216	Home Health Care Services	20	$3,269,216	8,985	$363,853	5.46%	*	$19,873	$37,189	$4.14	0.001%	0.021%
6219	Other Ambulatory Health Care Services	100	$4,491,648	5,283	$850,208	5.46%	*	$46,437	$28,224	$5.34	0.001%	0.012%
6221	General Medical and Surgical Hospitals	20	$771,204	140	$5,508,604	5.46%	**	$300,873	$739	$5.28	0.000%	0.002%
6222	Psychiatric and Substance Abuse Hospitals	20	$46,165	58	$795,944	5.38%	**	$42,831	$324	$5.58	0.001%	0.013%
6223	Specialty (except Psychiatric and Substance Abuse) Hospitals	20	$93,130	135	$689,853	5.38%	**	$37,122	$823	$6.10	0.001%	0.016%

Table V-32, contd.
Average Cost Impacts on Small Business Entities Affected by OSHA's Proposed Revision to Subparts D and I (per Entity, by 4-Digit NAICS Code)

NAICS	Industry	SBA Employment Size Criterion [a]	Estimated Receipts, 2006 ($1,000)[b]	Entities [c]	Average Receipts per Entity	Profit Rate [d]		Estimated Profits per Entity	Estimated Cost of the Proposed Rule	Average Cost per Entity	Ratio of Average Cost to Revenues	Ratio of Average Cost to Profits
6231	Nursing Care Facilities	500	$37,848,113	8,294	$4,563,312	5.38%	**	$245,561	$78,025	$9.41	0.000%	0.004%
6232	Residential Mental Retardation, Mental Health and Substance Abuse Facilities	100	$3,195,472	5,926	$539,229	5.38%	**	$29,017	$28,152	$4.75	0.001%	0.016%
6233	Community Care Facilities for the Elderly	100	$6,089,574	12,990	$468,789	5.38%	**	$25,227	$51,003	$3.93	0.001%	0.016%
6239	Other Residential Care Facilities	100	$1,586,306	3,054	$519,419	5.38%	**	$27,951	$14,162	$4.64	0.001%	0.017%
6241	Individual and Family Services	100	$18,371,166	36,613	$501,766	5.38%	**	$27,001	$104,948	$2.87	0.001%	0.011%
6242	Community Food and Housing, and Emergency and Other Relief Services	100	$7,966,235	8,773	$908,040	5.38%	**	$48,864	$33,017	$3.76	0.000%	0.008%
6243	Vocational Rehabilitation Services	100	$2,488,820	3,514	$708,258	5.38%	**	$38,113	$13,443	$3.83	0.001%	0.010%

Table V-32, contd.
Average Cost Impacts on Small Business Entities Affected by OSHA's Proposed Revision to Subparts D and I (per Entity, by 4-Digit NAICS Code)

NAICS	Industry	SBA Employment Size Criterion [a]	Estimated Receipts, 2006 ($1,000)[b]	Entities [c]	Average Receipts per Entity	Profit Rate [d]		Estimated Profits per Entity	Estimated Cost of the Proposed Rule	Average Cost per Entity	Ratio of Average Cost to Revenues	Ratio of Average Cost to Profits
6244	Child Day Care Services	100	$16,360,217	58,234	$280,939	5.38%	**	$15,118	$147,906	$2.54	0.001%	0.017%
7111	Performing Arts Companies	500	$10,447,810	9,019	$1,158,422	5.38%	*	$62,337	$51,142	$5.67	0.000%	0.009%
7112	Spectator Sports	100	$3,408,224	4,153	$820,666	9.76%	*	$80,083	$21,572	$5.19	0.001%	0.006%
7113	Promoters of Performing Arts, Sports, and Similar Events	20	$3,622,249	4,923	$735,781	9.76%	*	$71,799	$47,610	$9.67	0.001%	0.013%
7114	Agents and Managers for Artists, Athletes, Entertainers, and Other Public Figures	500	$3,683,130	3,436	$1,071,924	9.76%	*	$104,601	$13,648	$3.97	0.000%	0.004%
7115	Independent Artists, Writers, and Performers	500	$10,944,145	19,366	$565,122	9.76%	*	$55,146	$71,251	$3.68	0.001%	0.007%
7121	Museums, Historical Sites, and Similar Institutions	100	$5,187,827	6,324	$820,340	9.76%	**	$80,051	$28,451	$4.50	0.001%	0.006%

Table V-32, contd.
Average Cost Impacts on Small Business Entities Affected by OSHA's Proposed Revision to Subparts D and I (per Entity, by 4-Digit NAICS Code)

NAICS	Industry	SBA Employment Size Criterion [a]	Estimated Receipts, 2006 ($1,000)[b]	Entities [c]	Average Receipts per Entity	Profit Rate [d]		Estimated Profits per Entity	Estimated Cost of the Proposed Rule	Average Cost per Entity	Ratio of Average Cost to Revenues	Ratio of Average Cost to Profits
7131	Amusement Parks and Arcades	100	$1,325,416	2,271	$583,626	7.74%	*	$45,159	$11,982	$5.28	0.001%	0.012%
7132	Gambling Industries	500	$9,054,994	1,967	$4,603,454	6.33%	*	$291,371	$11,245	$5.72	0.000%	0.002%
7139	Other Amusement and Recreation Industries	100	$27,950,262	60,550	$461,606	6.33%	*	$29,217	$258,135	$4.26	0.001%	0.015%
7211	Traveler Accommodation	100	$25,942,047	41,352	$627,347	6.33%	*	$39,707	$320,676	$7.75	0.001%	0.020%
7212	RV (Recreational Vehicle) Parks and Recreational Camps	100	$5,683,763	6,534	$869,875	5.64%	*	$49,094	$35,819	$5.48	0.001%	0.011%
7213	Rooming and Boarding Houses	100	$1,853,516	2,150	$862,100	5.64%	*	$48,656	$9,654	$4.49	0.001%	0.009%
7221	Full-Service Restaurants	500	$122,123,529	184,085	$663,408	5.64%	*	$37,442	$745,451	$4.05	0.001%	0.011%
7222	Limited-Service Eating Places	100	$66,079,469	166,087	$397,861	4.98%	*	$19,803	$425,431	$2.56	0.001%	0.013%
7223	Special Food Services	100	$6,385,800	14,317	$446,029	4.98%	*	$22,200	$110,542	$7.72	0.002%	0.035%

Table V-32, contd.
Average Cost Impacts on Small Business Entities Affected by OSHA's Proposed Revision to Subparts D and I (per Entity, by 4-Digit NAICS Code)

NAICS	Industry	SBA Employment Size Criterion [a]	Estimated Receipts, 2006 ($1,000)[b]	Entities [c]	Average Receipts per Entity	Profit Rate [d]		Estimated Profits per Entity	Estimated Cost of the Proposed Rule	Average Cost per Entity	Ratio of Average Cost to Revenues	Ratio of Average Cost to Profits
7224	Drinking Places (Alcoholic Beverages)	100	$21,035,134	45,317	$464,178	4.98%	*	$23,103	$140,393	$3.10	0.001%	0.013%
8111	Automotive Repair and Maintenance	100	$160,322,321	150,385	$1,066,079	4.98%	*	$53,062	$2,545,088	$16.92	0.002%	0.032%
8112	Electronic and Precision Equipment Repair and Maintenance	20	$4,397,630	10,849	$405,349	3.68%	*	$14,933	$153,210	$14.12	0.003%	0.095%
8113	Commercial and Industrial Machinery and Equipment (except Automotive and Electronic) Repair and Maintenance	100	$20,781,375	22,686	$916,044	5.17%	*	$47,390	$452,947	$19.97	0.002%	0.042%
8114	Personal and Household Goods Repair and Maintenance	500	$7,218,017	22,293	$323,780	5.17%	*	$16,750	$238,573	$10.70	0.003%	0.064%

Table V-32, contd.
Average Cost Impacts on Small Business Entities Affected by OSHA's Proposed Revision to Subparts D and I (per Entity, by 4-Digit NAICS Code)

NAICS	Industry	SBA Employment Size Criterion [a]	Estimated Receipts, 2006 ($1,000)[b]	Entities [c]	Average Receipts per Entity	Profit Rate [d]		Estimated Profits per Entity	Estimated Cost of the Proposed Rule	Average Cost per Entity	Ratio of Average Cost to Revenues	Ratio of Average Cost to Profits
8121	Personal Care Services	100	$31,198,381	94,703	$329,434	5.17%	*	$17,043	$233,100	$2.46	0.001%	0.014%
8122	Death Care Services	20	$8,082,879	14,892	$542,767	5.67%	*	$30,794	$79,455	$5.34	0.001%	0.017%
8123	Dry-cleaning and Laundry Services	20	$7,114,322	32,044	$222,017	5.67%	*	$12,596	$157,751	$4.92	0.002%	0.039%
8129	Other Personal Services	20	$6,775,433	24,454	$277,069	5.67%	*	$15,720	$124,321	$5.08	0.002%	0.032%
8131	Religious Organizations	20	$37,868,483	156,829	$241,464	5.67%	*	$13,700	$800,794	$5.11	0.002%	0.037%
8132	Grantmaking and Giving Services	20	$22,193,695	12,660	$1,753,057	2.55%	*	$44,781	$54,804	$4.33	0.000%	0.010%
8133	Social Advocacy Organizations	20	$5,284,519	10,750	$491,583	2.55%	*	$12,557	$55,353	$5.15	0.001%	0.041%
8134	Civic and Social Organizations	20	$8,327,806	25,609	$325,191	2.55%	*	$8,307	$117,185	$4.58	0.001%	0.055%
8139	Business, Professional, Labor, Political, and Similar Organizations	20	$28,760,289	58,330	$493,062	2.55%	*	$12,595	$328,184	$5.63	0.001%	0.045%

[a] SBA criteria specified in dollar terms converted to size-class definition based on average revenues of different size establishments. Most restrictive criterion for 6-digit NAICS applied to the 4-digit NAICS level.

Table V-32, contd.
Average Cost Impacts on Small Business Entities Affected by OSHA's Proposed Revision to Subparts D and I (per Entity, by 4-Digit NAICS Code)

NAICS	Industry	SBA Employment Size Criterion [a]	Estimated Receipts, 2006 ($1,000)[b]	Entities [c]	Average Receipts per Entity	Profit Rate [d]	Estimated Profits per Entity	Estimated Cost of the Proposed Rule	Average Cost per Entity	Ratio of Average Cost to Revenues	Ratio of Average Cost to Profits

[b] Estimated based on 2002 receipts and payroll data from U.S. Census Bureau, *Statistics of U.S. Businesses*, 2002 and payroll data from U.S. Census Bureau, *Statistics of U.S. Businesses*, 2006. Receipts were not available for 2006 at disaggregated industry levels, but were estimated assuming the ratio of receipts to payroll remained unchanged between 2002 and 2006.
[c] U.S. Census Bureau, *Statistics of U.S. Businesses*, 2006
[d] Estimated from average of the yearly ratios of net income to total receipts as reported by the U.S. Internal Revenue Service, *Corporation Source Book, 2000 – 2006*. Data were not available at disaggregated levels for all industries; profit rates at more highly aggregated levels are used for such industries.
N/A: Data not available.
* Profit rate imputed from corresponding 3-digit NAICS industry.
** Profit rate imputed from corresponding 2-digit NAICS industry.
Source: U.S. Dept. of Labor, OSHA, Directorate of Evaluation and Analysis, Office of Regulatory Analysis, based on ERG, 2007.

Table V-33
Cost Impacts on Very Small Business Entities (fewer than 20 employees) Affected by OSHA's Proposed Revision to Subparts D and I (per Entity, by 4-Digit NAICS Code)

NAICS	Industry	Estimated Receipts, 2006 ($1,000)[a]	Entities [b]	Average Receipts per Entity	Profit Rate [c]		Estimated Profits per Entity	Estimated Cost of the Proposed Rule	Average Cost per Entity	Ratio of Average Cost to Revenues	Ratio of Average Cost to Profits
1131	Timber Tract Operations	$387,809	372	$1,042,497	4.36%	*	$45,497	$2,595	$6.98	0.001%	0.015%
1132	Forest Nurseries and Gathering of Forest Products	$80,513	149	$540,355	4.36%	*	$23,582	$1,204	$8.08	0.001%	0.034%
1133	Logging	$6,192,758	9,426	$656,987	4.36%	*	$28,672	$73,869	$7.84	0.001%	0.027%
1141	Fishing	$823,465	1,963	$419,493	5.93%	*	$24,896	$11,888	$6.06	0.001%	0.024%
1142	Hunting and Trapping	$87,850	331	$265,407	5.93%	*	$15,752	$2,020	$6.10	0.002%	0.039%
1153	Support Activities for Forestry	$605,251	1,462	$413,988	5.44%	*	$22,519	$9,327	$6.38	0.002%	0.028%
2111	Oil and Gas Extraction	$12,569,181	6,063	$2,073,096	14.88%		$308,504	$205,147	$33.84	0.002%	0.011%
2211	Electric Power Generation, Transmission and Distribution	$4,870,743	627	$7,768,331	4.44%		$344,881	$119,756	$191.00	0.002%	0.055%
2212	Natural Gas Distribution	$3,414,046	360	$9,483,461	2.98%		$282,516	$12,920	$35.89	0.000%	0.013%
2213	Water, Sewage and Other Systems	$2,033,096	4,202	$483,840	7.06%		$34,160	$1,780,069	$423.62	0.088%	1.240%
3111	Animal Food Manufacturing	$2,006,640	799	$2,511,440	4.24%		$106,596	$9,609	$12.03	0.000%	0.011%

Table V-33, contd.
Cost Impacts on Very Small Business Entities (fewer than 20 employees) Affected by OSHA's Proposed Revision to Subparts D and I (per Entity, by 4-Digit NAICS Code)

NAICS	Industry	Estimated Receipts, 2006 ($1,000)[a]	Entities [b]	Average Receipts per Entity	Profit Rate [c]		Estimated Profits per Entity	Estimated Cost of the Proposed Rule	Average Cost per Entity	Ratio of Average Cost to Revenues	Ratio of Average Cost to Profits
3112	Grain and Oilseed Milling	$888,353	249	$3,567,683	4.24%	*	$151,427	$3,731	$14.98	0.000%	0.010%
3113	Sugar and Confectionery Product Manufacturing	$843,164	1,204	$700,303	7.68%		$53,791	$12,231	$10.16	0.001%	0.019%
3114	Fruit and Vegetable Preserving and Specialty Food Manufacturing	$1,133,325	689	$1,644,885	7.01%		$115,328	$8,105	$11.76	0.001%	0.010%
3115	Dairy Product Manufacturing	$1,187,406	601	$1,975,717	2.66%		$52,485	$7,946	$13.22	0.001%	0.025%
3116	Animal Slaughtering and Processing	$3,438,617	2,223	$1,546,836	2.41%		$37,230	$22,257	$10.01	0.001%	0.027%
3117	Seafood Product Preparation and Packaging	$825,521	344	$2,399,770	2.41%	*	$57,760	$3,362	$9.77	0.000%	0.017%
3118	Bakeries and Tortilla Manufacturing	$3,212,501	7,422	$432,835	10.13%		$43,835	$67,820	$9.14	0.002%	0.021%
3119	Other Food Manufacturing	$2,703,041	1,684	$1,605,131	5.68%		$91,107	$18,756	$11.14	0.001%	0.012%
3121	Beverage Manufacturing	$2,270,554	2,330	$974,487	6.64%	*	$64,735	$25,781	$11.06	0.001%	0.017%
3122	Tobacco Manufacturing	$78,247	51	$1,534,247	14.49%		$222,342	$671	$13.16	0.001%	0.006%
3131	Fiber, Yarn, and Thread Mills	$180,902	182	$993,969	4.31%	*	$42,882	$2,027	$11.14	0.001%	0.026%

Table V-33, contd.
Cost Impacts on Very Small Business Entities (fewer than 20 employees) Affected by OSHA's Proposed Revision to Subparts D and I (per Entity, by 4-Digit NAICS Code)

NAICS	Industry	Estimated Receipts, 2006 ($1,000)[a]	Entities [b]	Average Receipts per Entity	Profit Rate [c]		Estimated Profits per Entity	Estimated Cost of the Proposed Rule	Average Cost per Entity	Ratio of Average Cost to Revenues	Ratio of Average Cost to Profits
3132	Fabric Mills	$656,662	720	$912,031	4.31%	*	$39,347	$7,391	$10.27	0.001%	0.026%
3133	Textile and Fabric Finishing and Fabric Coating Mills	$1,258,127	967	$1,301,062	4.31%	*	$56,130	$8,883	$9.19	0.001%	0.016%
3141	Textile Furnishings Mills	$1,736,097	2,024	$857,756	4.56%	*	$39,100	$17,052	$8.43	0.001%	0.022%
3149	Other Textile Product Mills	$1,709,878	3,275	$522,100	4.56%	*	$23,799	$25,664	$7.84	0.002%	0.033%
3151	Apparel Knitting Mills	$195,782	289	$677,446	3.16%		$21,420	$2,606	$9.02	0.001%	0.042%
3152	Cut and Sew Apparel Manufacturing	$3,767,588	7,536	$499,945	5.59%		$27,939	$50,792	$6.74	0.001%	0.024%
3159	Apparel Accessories and Other Apparel Manufacturing	$339,583	725	$468,390	4.66%		$21,824	$5,527	$7.62	0.002%	0.035%
3161	Leather and Hide Tanning and Finishing	$123,741	188	$658,199	6.10%	*	$40,126	$1,595	$8.48	0.001%	0.021%
3162	Footwear Manufacturing	$121,200	202	$600,000	6.10%	*	$36,578	$1,799	$8.91	0.001%	0.024%
3169	Other Leather and Allied Product Manufacturing	$336,146	673	$499,474	6.10%	*	$30,450	$4,899	$7.28	0.001%	0.024%
3211	Sawmills and Wood Preservation	$3,008,217	2,620	$1,148,174	4.08%	*	$46,843	$28,052	$10.71	0.001%	0.023%

Table V-33, contd.
Cost Impacts on Very Small Business Entities (fewer than 20 employees) Affected by OSHA's Proposed Revision to Subparts D and I (per Entity, by 4-Digit NAICS Code)

NAICS	Industry	Estimated Receipts, 2006 ($1,000)[a]	Entities [b]	Average Receipts per Entity	Profit Rate [c]		Estimated Profits per Entity	Estimated Cost of the Proposed Rule	Average Cost per Entity	Ratio of Average Cost to Revenues	Ratio of Average Cost to Profits
3212	Veneer, Plywood, and Engineered Wood Product Manufacturing	$860,217	710	$1,211,573	4.08%	*	$49,430	$8,531	$12.02	0.001%	0.024%
3219	Other Wood Product Manufacturing	$5,466,331	6,911	$790,961	4.08%	*	$32,270	$66,672	$9.65	0.001%	0.030%
3221	Pulp, Paper, and Paperboard Mills	$206,617	86	$2,402,528	3.18%		$76,401	$2,025	$23.55	0.001%	0.031%
3222	Converted Paper Product Manufacturing	$2,527,384	1,412	$1,789,932	8.01%		$143,414	$26,423	$18.71	0.001%	0.013%
3231	Printing and Related Support Activities	$14,244,301	26,463	$538,272	4.37%	*	$23,533	$257,696	$9.74	0.002%	0.041%
3241	Petroleum and Coal Products Manufacturing	$2,167,046	689	$3,145,204	7.50%	*	$235,928	$21,831	$31.69	0.001%	0.013%
3251	Basic Chemical Manufacturing	$2,192,053	682	$3,214,155	4.58%		$147,210	$18,700	$27.42	0.001%	0.019%
3252	Resin, Synthetic Rubber, and Artificial Synthetic Fibers and Filaments Manufacturing	$797,842	340	$2,346,595	8.53%		$200,167	$9,323	$27.42	0.001%	0.014%

Table V-33, contd.
Cost Impacts on Very Small Business Entities (fewer than 20 employees) Affected by OSHA's Proposed Revision to Subparts D and I (per Entity, by 4-Digit NAICS Code)

NAICS	Industry	Estimated Receipts, 2006 ($1,000)[a]	Entities [b]	Average Receipts per Entity	Profit Rate [c]		Estimated Profits per Entity	Estimated Cost of the Proposed Rule	Average Cost per Entity	Ratio of Average Cost to Revenues	Ratio of Average Cost to Profits
3253	Pesticide, Fertilizer, and Other Agricultural Chemical Manufacturing	$1,060,950	449	$2,362,918	11.10%	*	$262,168	$11,101	$24.72	0.001%	0.009%
3254	Pharmaceutical and Medicine Manufacturing	$1,671,309	828	$2,018,489	16.64%		$335,797	$13,829	$16.70	0.001%	0.005%
3255	Paint, Coating, and Adhesive Manufacturing	$1,668,102	989	$1,686,655	5.38%		$90,816	$14,755	$14.92	0.001%	0.016%
3256	Soap, Cleaning Compound, and Toilet Preparation Manufacturing	$3,031,221	1,417	$2,139,182	9.21%		$196,922	$21,579	$15.23	0.001%	0.008%
3259	Other Chemical Product and Preparation Manufacturing	$2,120,935	1,402	$1,512,793	4.51%		$68,164	$23,326	$16.64	0.001%	0.024%
3261	Plastics Product Manufacturing	$6,241,338	5,216	$1,196,576	4.42%		$52,850	$58,645	$11.24	0.001%	0.021%
3262	Rubber Product Manufacturing	$897,778	968	$927,457	2.59%		$24,013	$11,449	$11.83	0.001%	0.049%
3271	Clay Product and Refractory Manufacturing	$479,460	1,008	$475,655	4.41%		$21,000	$13,103	$13.00	0.003%	0.062%

Table V-33, contd.
Cost Impacts on Very Small Business Entities (fewer than 20 employees) Affected by OSHA's Proposed Revision to Subparts D and I (per Entity, by 4-Digit NAICS Code)

NAICS	Industry	Estimated Receipts, 2006 ($1,000)[a]	Entities [b]	Average Receipts per Entity	Profit Rate [c]		Estimated Profits per Entity	Estimated Cost of the Proposed Rule	Average Cost per Entity	Ratio of Average Cost to Revenues	Ratio of Average Cost to Profits
3272	Glass and Glass Product Manufacturing	$788,025	1,376	$572,692	3.42%		$19,591	$19,467	$14.15	0.002%	0.072%
3273	Cement and Concrete Product Manufacturing	$4,171,545	3,214	$1,297,929	6.64%		$86,158	$58,861	$18.31	0.001%	0.021%
3274	Lime and Gypsum Product Manufacturing	$224,556	163	$1,377,646	6.64%	*	$91,449	$2,910	$17.85	0.001%	0.020%
3279	Other Nonmetallic Mineral Product Manufacturing	$1,809,989	2,074	$872,705	5.49%	*	$47,903	$31,873	$15.37	0.002%	0.032%
3311	Iron and Steel Mills and Ferroalloy Manufacturing	$1,127,635	473	$2,384,007	4.49%		$107,089	$8,533	$18.04	0.001%	0.017%
3312	Steel Product Manufacturing from Purchased Steel	$354,222	272	$1,302,285	4.49%	*	$58,499	$4,550	$16.73	0.001%	0.029%
3313	Alumina and Aluminum Production and Processing	$395,465	209	$1,892,177	4.46%		$84,484	$3,805	$18.20	0.001%	0.022%
3314	Nonferrous Metal (except Aluminum) Production and Processing	$654,593	431	$1,518,778	4.42%	*	$67,054	$7,630	$17.70	0.001%	0.026%
3315	Foundries	$831,986	992	$838,695	4.11%		$34,502	$12,919	$13.02	0.002%	0.038%

Table V-33, contd.
Cost Impacts on Very Small Business Entities (fewer than 20 employees) Affected by OSHA's Proposed Revision to Subparts D and I (per Entity, by 4-Digit NAICS Code)

NAICS	Industry	Estimated Receipts, 2006 ($1,000)[a]	Entities [b]	Average Receipts per Entity	Profit Rate [c]		Estimated Profits per Entity	Estimated Cost of the Proposed Rule	Average Cost per Entity	Ratio of Average Cost to Revenues	Ratio of Average Cost to Profits
3321	Forging and Stamping	$1,450,984	1,265	$1,147,023	4.71%		$53,968	$16,960	$13.41	0.001%	0.025%
3322	Cutlery and Handtool Manufacturing	$755,903	973	$776,879	5.22%		$40,581	$11,110	$11.42	0.001%	0.028%
3323	Architectural and Structural Metals Manufacturing	$7,826,903	8,656	$904,217	4.70%		$42,533	$97,148	$11.22	0.001%	0.026%
3324	Boiler, Tank, and Shipping Container Manufacturing	$891,879	638	$1,397,929	3.58%		$50,096	$8,440	$13.23	0.001%	0.026%
3325	Hardware Manufacturing	$442,351	438	$1,009,933	5.22%	*	$52,755	$5,201	$11.87	0.001%	0.023%
3326	Spring and Wire Product Manufacturing	$850,387	923	$921,330	5.22%	*	$48,127	$10,891	$11.80	0.001%	0.025%
3327	Machine Shops; Turned Product; and Screw, Nut, and Bolt Manufacturing	$11,888,606	19,544	$608,300	5.80%	*	$35,270	$213,298	$10.91	0.002%	0.031%
3328	Coating, Engraving, Heat Treating, and Allied Activities	$2,462,950	3,871	$636,257	4.85%		$30,888	$42,106	$10.88	0.002%	0.035%
3329	Other Fabricated Metal Product Manufacturing	$3,622,775	3,893	$930,587	6.81%		$63,344	$46,487	$11.94	0.001%	0.019%

Table V-33, contd.
Cost Impacts on Very Small Business Entities (fewer than 20 employees) Affected by OSHA's Proposed Revision to Subparts D and I (per Entity, by 4-Digit NAICS Code)

NAICS	Industry	Estimated Receipts, 2006 ($1,000)[a]	Entities [b]	Average Receipts per Entity	Profit Rate [c]	Estimated Profits per Entity	Estimated Cost of the Proposed Rule	Average Cost per Entity	Ratio of Average Cost to Revenues	Ratio of Average Cost to Profits
3331	Agriculture, Construction, and Mining Machinery Manufacturing	$2,277,178	1,634	$1,393,622	5.10%	$71,064	$20,381	$12.47	0.001%	0.018%
3332	Industrial Machinery Manufacturing	$2,532,204	2,414	$1,048,966	5.80%	$60,827	$30,083	$12.46	0.001%	0.020%
3333	Commercial and Service Industry Machinery Manufacturing	$1,452,641	1,403	$1,035,382	4.86%	$50,304	$17,565	$12.52	0.001%	0.025%
3334	Ventilation, Heating, Air-Conditioning, and Commercial Refrigeration Equipment Manufacturing	$1,024,923	826	$1,240,826	4.55%	$56,494	$10,543	$12.76	0.001%	0.023%
3335	Metalworking Machinery Manufacturing	$4,107,437	5,799	$708,301	5.29%	$37,464	$72,668	$12.53	0.002%	0.033%
3336	Engine, Turbine, and Power Transmission Equipment Manufacturing	$584,004	407	$1,434,900	2.63%	$37,694	$6,098	$14.98	0.001%	0.040%
3339	Other General Purpose Machinery Manufacturing	$4,054,596	3,516	$1,153,184	4.58%	$52,774	$45,436	$12.92	0.001%	0.024%

Table V-33, contd.
Cost Impacts on Very Small Business Entities (fewer than 20 employees) Affected by OSHA's Proposed Revision to Subparts D and I (per Entity, by 4-Digit NAICS Code)

NAICS	Industry	Estimated Receipts, 2006 ($1,000)[a]	Entities [b]	Average Receipts per Entity	Profit Rate [c]		Estimated Profits per Entity	Estimated Cost of the Proposed Rule	Average Cost per Entity	Ratio of Average Cost to Revenues	Ratio of Average Cost to Profits
3341	Computer and Peripheral Equipment Manufacturing	$1,132,789	841	$1,346,955	9.05%		$121,852	$9,054	$10.77	0.001%	0.009%
3342	Communications Equipment Manufacturing	$1,195,330	973	$1,228,500	4.57%		$56,177	$12,936	$13.29	0.001%	0.024%
3343	Audio and Video Equipment Manufacturing	$420,605	369	$1,139,851	4.52%		$51,535	$3,966	$10.75	0.001%	0.021%
3344	Semiconductor and Other Electronic Component Manufacturing	$4,475,225	2,333	$1,918,228	6.60%		$126,699	$29,862	$12.80	0.001%	0.010%
3345	Navigational, Measuring, Electromedical, and Control Instruments Manufacturing	$3,210,871	2,962	$1,084,021	5.94%		$64,418	$38,645	$13.05	0.001%	0.020%
3346	Manufacturing and Reproducing Magnetic and Optical Media	$563,452	614	$917,675	4.52%	*	$41,490	$6,142	$10.00	0.001%	0.024%
3351	Electric Lighting Equipment Manufacturing	$762,790	704	$1,083,508	4.21%		$45,650	$7,793	$11.07	0.001%	0.024%
3352	Household Appliance Manufacturing	$475,225	189	$2,514,418	4.21%		$105,937	$2,095	$11.09	0.000%	0.010%

Table V-33, contd.
Cost Impacts on Very Small Business Entities (fewer than 20 employees) Affected by OSHA's Proposed Revision to Subparts D and I (per Entity, by 4-Digit NAICS Code)

NAICS	Industry	Estimated Receipts, 2006 ($1,000)[a]	Entities [b]	Average Receipts per Entity	Profit Rate [c]		Estimated Profits per Entity	Estimated Cost of the Proposed Rule	Average Cost per Entity	Ratio of Average Cost to Revenues	Ratio of Average Cost to Profits
3353	Electrical Equipment Manufacturing	$1,599,800	1,309	$1,222,154	7.15%		$87,360	$15,885	$12.14	0.001%	0.014%
3359	Other Electrical Equipment and Component Manufacturing	$1,428,517	1,035	$1,380,209	5.41%		$74,701	$13,130	$12.69	0.001%	0.017%
3361	Motor Vehicle Manufacturing	$602,458	181	$3,328,498	4.87%		$161,971	$3,023	$16.70	0.001%	0.010%
3362	Motor Vehicle Body and Trailer Manufacturing	$1,171,697	1,042	$1,124,469	2.04%	*	$22,944	$12,495	$11.99	0.001%	0.052%
3363	Motor Vehicle Parts Manufacturing	$3,196,010	2,540	$1,258,272	2.04%	*	$25,675	$34,147	$13.44	0.001%	0.052%
3364	Aerospace Product and Parts Manufacturing	$805,446	730	$1,103,351	2.04%		$22,514	$11,791	$16.15	0.001%	0.072%
3365	Railroad Rolling Stock Manufacturing	$124,475	75	$1,659,673	4.16%	*	$69,084	$1,112	$14.83	0.001%	0.021%
3366	Ship and Boat Building	$1,004,262	1,152	$871,756	2.72%		$23,736	$28,093	$24.39	0.003%	0.103%
3369	Other Transportation Equipment Manufacturing	$623,309	738	$844,592	5.86%		$49,508	$7,939	$10.76	0.001%	0.022%

Table V-33, contd.
Cost Impacts on Very Small Business Entities (fewer than 20 employees) Affected by OSHA's Proposed Revision to Subparts D and I (per Entity, by 4-Digit NAICS Code)

NAICS	Industry	Estimated Receipts, 2006 ($1,000)[a]	Entities [b]	Average Receipts per Entity	Profit Rate [c]		Estimated Profits per Entity	Estimated Cost of the Proposed Rule	Average Cost per Entity	Ratio of Average Cost to Revenues	Ratio of Average Cost to Profits
3371	Household and Institutional Furniture and Kitchen Cabinet Manufacturing	$6,772,307	13,501	$501,615	6.31%	*	$31,648	$114,535	$8.48	0.002%	0.027%
3372	Office Furniture (including Fixtures) Manufacturing	$2,004,309	2,534	$790,967	4.54%	*	$35,935	$26,031	$10.27	0.001%	0.029%
3379	Other Furniture Related Product Manufacturing	$512,019	592	$864,897	4.54%	*	$39,293	$5,853	$9.89	0.001%	0.025%
3391	Medical Equipment and Supplies Manufacturing	$4,659,876	9,659	$482,439	4.54%		$21,918	$100,007	$10.35	0.002%	0.047%
3399	Other Miscellaneous Manufacturing	$9,815,716	14,922	$657,802	10.77%		$70,839	$144,769	$9.70	0.001%	0.014%
4231	Motor Vehicle and Motor Vehicle Parts and Supplies Merchant Wholesalers	$33,796,942	14,546	$2,323,453	5.80%		$134,657	$222,517	$15.30	0.001%	0.011%
4232	Furniture and Home Furnishing Merchant Wholesalers	$23,149,126	9,117	$2,539,117	2.76%	*	$70,025	$99,629	$10.93	0.000%	0.016%
4233	Lumber and Other Construction Materials Merchant Wholesalers	$31,719,378	10,007	$3,169,719	2.90%		$92,050	$156,423	$15.63	0.000%	0.017%

Table V-33, contd.
Cost Impacts on Very Small Business Entities (fewer than 20 employees) Affected by OSHA's Proposed Revision to Subparts D and I (per Entity, by 4-Digit NAICS Code)

NAICS	Industry	Estimated Receipts, 2006 ($1,000)[a]	Entities [b]	Average Receipts per Entity	Profit Rate [c]	Estimated Profits per Entity	Estimated Cost of the Proposed Rule	Average Cost per Entity	Ratio of Average Cost to Revenues	Ratio of Average Cost to Profits
4234	Professional and Commercial Equipment and Supplies Merchant Wholesalers	$41,082,278	22,418	$1,832,558	3.04%	$55,739	$367,033	$16.37	0.001%	0.029%
4235	Metal and Mineral (except Petroleum) Merchant Wholesalers	$29,709,743	5,765	$5,153,468	2.78%	$143,354	$77,794	$13.49	0.000%	0.009%
4236	Electrical and Electronic Goods Merchant Wholesalers	$56,255,928	16,322	$3,446,632	2.69%	$92,684	$275,683	$16.89	0.000%	0.018%
4237	Hardware, and Plumbing and Heating Equipment and Supplies Merchant Wholesalers	$23,328,205	8,931	$2,612,048	2.28%	$59,475	$154,242	$17.27	0.001%	0.029%
4238	Machinery, Equipment, and Supplies Merchant Wholesalers	$79,350,790	35,906	$2,209,959	2.99%	$66,078	$681,589	$18.98	0.001%	0.029%
4239	Miscellaneous Durable Goods Merchant Wholesalers	$59,619,001	27,590	$2,160,892	3.44%	$74,240	$351,677	$12.75	0.001%	0.017%
4241	Paper and Paper Product Merchant Wholesalers	$17,913,702	7,732	$2,316,826	2.90%	$67,282	$81,321	$10.52	0.000%	0.016%

Table V-33, contd.
Cost Impacts on Very Small Business Entities (fewer than 20 employees) Affected by OSHA's Proposed Revision to Subparts D and I (per Entity, by 4-Digit NAICS Code)

NAICS	Industry	Estimated Receipts, 2006 ($1,000)[a]	Entities [b]	Average Receipts per Entity	Profit Rate [c]		Estimated Profits per Entity	Estimated Cost of the Proposed Rule	Average Cost per Entity	Ratio of Average Cost to Revenues	Ratio of Average Cost to Profits
4242	Drugs and Druggists' Sundries Merchant Wholesalers	$14,645,451	5,112	$2,864,916	2.12%		$60,879	$46,063	$9.01	0.000%	0.015%
4243	Apparel, Piece Goods, and Notions Merchant Wholesalers	$29,052,068	12,590	$2,307,551	3.46%		$79,734	$100,090	$7.95	0.000%	0.010%
4244	Grocery and Related Product Wholesalers	$82,094,767	22,264	$3,687,332	4.79%		$176,774	$247,689	$11.13	0.000%	0.006%
4245	Farm Product Raw Material Merchant Wholesalers	$23,766,585	3,217	$7,387,810	2.59%		$191,509	$35,334	$10.98	0.000%	0.006%
4246	Chemical and Allied Products Merchant Wholesalers	$20,697,064	7,069	$2,927,863	2.28%		$66,751	$106,772	$15.10	0.001%	0.023%
4247	Petroleum and Petroleum Products Merchant Wholesalers	$29,492,323	3,505	$8,414,357	3.16%		$266,252	$67,443	$19.24	0.000%	0.007%
4248	Beer, Wine, and Distilled Alcoholic Beverage Merchant Wholesalers	$5,412,757	2,010	$2,692,914	2.00%		$53,773	$21,111	$10.50	0.000%	0.020%
4249	Miscellaneous Nondurable Goods Merchant Wholesalers	$41,576,666	22,457	$1,851,390	3.92%		$72,536	$198,711	$8.85	0.000%	0.012%

Table V-33, contd.
Cost Impacts on Very Small Business Entities (fewer than 20 employees) Affected by OSHA's Proposed Revision to Subparts D and I (per Entity, by 4-Digit NAICS Code)

NAICS	Industry	Estimated Receipts, 2006 ($1,000)[a]	Entities [b]	Average Receipts per Entity	Profit Rate [c]		Estimated Profits per Entity	Estimated Cost of the Proposed Rule	Average Cost per Entity	Ratio of Average Cost to Revenues	Ratio of Average Cost to Profits
4251	Wholesale Electronic Markets and Agents and Brokers	$104,389,486	50,014	$2,087,205	3.18%	*	$66,431	$545,447	$10.91	0.001%	0.016%
4411	Automobile Dealers	$76,660,409	32,728	$2,342,349	7.14%		$167,239	$502,832	$15.36	0.001%	0.009%
4412	Other Motor Vehicle Dealers	$23,808,475	13,140	$1,811,908	1.18%	**	$21,401	$199,925	$15.21	0.001%	0.071%
4413	Automotive Parts, Accessories, and Tire Stores	$22,705,955	31,293	$725,592	2.78%	*	$20,149	$473,574	$15.13	0.002%	0.075%
4421	Furniture Stores	$16,518,056	18,894	$874,249	1.45%	*	$12,642	$159,017	$8.42	0.001%	0.067%
4422	Home Furnishings Stores	$18,788,457	25,517	$736,311	3.63%	*	$26,750	$263,974	$10.35	0.001%	0.039%
4431	Electronics and Appliance Stores	$20,267,091	29,639	$683,798	3.63%	*	$24,843	$342,454	$11.55	0.002%	0.047%
4441	Building Material and Supplies Dealers	$43,376,582	39,068	$1,110,284	3.52%	*	$39,082	$427,359	$10.94	0.001%	0.028%
4442	Lawn and Garden Equipment and Supplies Stores	$14,399,020	15,134	$951,435	7.87%	**	$74,868	$155,758	$10.29	0.001%	0.014%
4451	Grocery Stores	$41,273,462	58,462	$705,988	2.20%	*	$15,561	$315,104	$5.39	0.001%	0.035%
4452	Specialty Food Stores	$11,574,924	21,668	$534,194	2.07%	*	$11,038	$113,749	$5.25	0.001%	0.048%
4453	Beer, Wine, and Liquor Stores	$21,622,593	25,919	$834,237	2.07%	*	$17,238	$114,713	$4.43	0.001%	0.026%
4461	Health and Personal Care Stores	$49,201,213	40,170	$1,224,825	2.34%	*	$28,695	$278,028	$6.92	0.001%	0.024%
4471	Gasoline Stations	$84,812,096	62,033	$1,367,209	2.94%	*	$40,137	$520,213	$8.39	0.001%	0.021%

Table V-33, contd.
Cost Impacts on Very Small Business Entities (fewer than 20 employees) Affected by OSHA's Proposed Revision to Subparts D and I (per Entity, by 4-Digit NAICS Code)

NAICS	Industry	Estimated Receipts, 2006 ($1,000)[a]	Entities [b]	Average Receipts per Entity	Profit Rate [c]		Estimated Profits per Entity	Estimated Cost of the Proposed Rule	Average Cost per Entity	Ratio of Average Cost to Revenues	Ratio of Average Cost to Profits
4481	Clothing Stores	$18,232,600	38,587	$472,506	1.01%	*	$4,783	$265,485	$6.88	0.001%	0.144%
4482	Shoe Stores	$3,633,483	6,189	$587,087	5.53%	*	$32,491	$39,276	$6.35	0.001%	0.020%
4483	Jewelry, Luggage, and Leather Goods Stores	$12,044,959	18,976	$634,747	5.53%	*	$35,129	$148,761	$7.84	0.001%	0.022%
4511	Sporting Goods, Hobby, and Musical Instrument Stores	$15,827,965	29,986	$527,845	5.53%	*	$29,213	$277,337	$9.25	0.002%	0.032%
4512	Book, Periodical, and Music Stores	$3,566,592	8,788	$405,848	3.00%	*	$12,170	$50,453	$5.74	0.001%	0.047%
4521	Department Stores	$578,257	285	$2,028,973	3.00%	*	$60,841	$2,121	$7.44	0.000%	0.012%
4529	Other General Merchandise Stores	$4,474,218	9,608	$465,676	4.26%	*	$19,820	$83,477	$8.69	0.002%	0.044%
4531	Florists	$5,024,928	18,784	$267,511	4.26%	*	$11,385	$70,314	$3.74	0.001%	0.033%
4532	Office Supplies, Stationery, and Gift Stores	$10,424,882	27,832	$374,565	3.60%	*	$13,471	$228,837	$8.22	0.002%	0.061%
4533	Used Merchandise Stores	$4,445,806	12,195	$364,560	3.60%	*	$13,111	$68,308	$5.60	0.002%	0.043%
4539	Other Miscellaneous Store Retailers	$25,004,525	35,275	$708,846	3.60%	*	$25,493	$339,229	$9.62	0.001%	0.038%
4541	Electronic Shopping and Mail-Order Houses	$13,741,769	13,418	$1,024,129	3.60%	*	$36,833	$85,564	$6.38	0.001%	0.017%
4542	Vending Machine Operators	$2,080,676	4,261	$488,307	4.05%	*	$19,771	$47,978	$11.26	0.002%	0.057%

Table V-33, contd.
Cost Impacts on Very Small Business Entities (fewer than 20 employees) Affected by OSHA's Proposed Revision to Subparts D and I (per Entity, by 4-Digit NAICS Code)

NAICS	Industry	Estimated Receipts, 2006 ($1,000)[a]	Entities [b]	Average Receipts per Entity	Profit Rate [c]		Estimated Profits per Entity	Estimated Cost of the Proposed Rule	Average Cost per Entity	Ratio of Average Cost to Revenues	Ratio of Average Cost to Profits
4543	Direct Selling Establishments	$17,714,226	19,468	$909,915	4.05%	*	$36,841	$222,184	$11.41	0.001%	0.031%
4811	Scheduled Air Transportation	$653,135	341	$1,915,351	4.05%	*	$77,550	$12,632	$37.04	0.002%	0.048%
4812	Nonscheduled Air Transportation	$1,907,100	1,945	$980,514	2.98%	*	$29,207	$36,355	$18.69	0.002%	0.064%
4831	Deep Sea, Coastal, and Great Lakes Water Transportation	$1,199,484	627	$1,913,053	2.98%	*	$56,985	$10,881	$17.35	0.001%	0.030%
4832	Inland Water Transportation	$471,751	445	$1,060,115	6.58%	*	$69,774	$6,121	$13.76	0.001%	0.020%
4841	General Freight Trucking	$25,520,469	51,793	$492,740	6.58%	*	$32,431	$524,242	$10.12	0.002%	0.031%
4842	Specialized Freight Trucking	$22,861,046	44,397	$514,923	2.80%	*	$14,420	$409,786	$9.23	0.002%	0.064%
4851	Urban Transit Systems	$130,604	410	$318,546	2.80%	*	$8,921	$4,312	$10.52	0.003%	0.118%
4852	Interurban and Rural Bus Transportation	$74,916	158	$474,151	2.52%	*	$11,945	$1,977	$12.52	0.003%	0.105%
4853	Taxi and Limousine Service	$1,975,353	6,242	$316,462	2.52%	*	$7,973	$37,196	$5.96	0.002%	0.075%
4854	School and Employee Bus Transportation	$460,377	2,065	$222,943	2.52%	*	$5,617	$18,468	$8.94	0.004%	0.159%
4855	Charter Bus Industry	$359,540	749	$480,027	2.52%	*	$12,094	$6,028	$8.05	0.002%	0.067%
4859	Other Transit and Ground Passenger Transportation	$697,837	2,321	$300,662	2.52%	*	$7,575	$15,671	$6.75	0.002%	0.089%

Table V-33, contd.
Cost Impacts on Very Small Business Entities (fewer than 20 employees) Affected by OSHA's Proposed Revision to Subparts D and I (per Entity, by 4-Digit NAICS Code)

NAICS	Industry	Estimated Receipts, 2006 ($1,000)[a]	Entities [b]	Average Receipts per Entity	Profit Rate [c]		Estimated Profits per Entity	Estimated Cost of the Proposed Rule	Average Cost per Entity	Ratio of Average Cost to Revenues	Ratio of Average Cost to Profits
4861	Pipeline Transportation of Crude Oil	$180,343	23	$7,841,011	2.52%	*	$197,542	$0	$0.00	0.000%	0.000%
4862	Pipeline Transportation of Natural Gas	$550,767	65	$8,473,335	14.28%	*	$1,209,754	$1,505	$23.15	0.000%	0.002%
4869	Other Pipeline Transportation	$36,978	38	$973,115	14.28%	*	$138,934	$0	$0.00	0.000%	0.000%
4871	Scenic and Sightseeing Transportation, Land	$265,948	520	$511,438	14.28%	*	$73,019	$3,222	$6.20	0.001%	0.008%
4872	Scenic and Sightseeing Transportation, Water	$592,466	1,701	$348,304	5.04%	*	$17,557	$11,798	$6.94	0.002%	0.040%
4879	Scenic and Sightseeing Transportation, Other	$169,014	154	$1,097,495	5.04%	*	$55,320	$1,676	$10.88	0.001%	0.020%
4881	Support Activities for Air Transportation	$2,175,890	3,193	$681,456	5.04%	**	$34,350	$45,933	$14.39	0.002%	0.042%
4882	Support Activities for Rail Transportation	$360,644	330	$1,092,860	3.61%	**	$39,447	$5,255	$15.92	0.001%	0.040%
4883	Support Activities for Water Transportation	$1,045,561	1,423	$734,759	3.61%	**	$26,521	$21,772	$15.30	0.002%	0.058%
4884	Support Activities for Road Transportation	$3,128,899	8,160	$383,444	3.61%	**	$13,840	$81,485	$9.99	0.003%	0.072%

Table V-33, contd.
Cost Impacts on Very Small Business Entities (fewer than 20 employees) Affected by OSHA's Proposed Revision to Subparts D and I (per Entity, by 4-Digit NAICS Code)

NAICS	Industry	Estimated Receipts, 2006 ($1,000)[a]	Entities [b]	Average Receipts per Entity	Profit Rate [c]		Estimated Profits per Entity	Estimated Cost of the Proposed Rule	Average Cost per Entity	Ratio of Average Cost to Revenues	Ratio of Average Cost to Profits
4885	Freight Transportation Arrangement	$10,671,342	11,478	$929,721	3.61%	**	$33,558	$89,318	$7.78	0.001%	0.023%
4889	Other Support Activities for Transportation	$601,593	1,335	$450,632	3.61%	**	$16,266	$11,885	$8.90	0.002%	0.055%
4921	Couriers	$1,494,770	3,123	$478,633	3.61%	**	$17,276	$46,125	$14.77	0.003%	0.085%
4922	Local Messengers and Local Delivery	$1,517,013	4,097	$370,274	3.61%	**	$13,365	$29,613	$7.23	0.002%	0.054%
4931	Warehousing and Storage	$3,055,820	3,739	$817,283	3.61%	*	$29,500	$49,540	$13.25	0.002%	0.045%
5111	Newspaper, Periodical, Book, and Directory Publishers	$8,260,517	13,904	$594,111	5.03%	*	$29,866	$90,899	$6.54	0.001%	0.022%
5112	Software Publishers	$3,993,639	4,545	$878,688	12.58%	*	$110,516	$38,565	$8.49	0.001%	0.008%
5121	Motion Picture and Video Industries	$10,792,250	15,602	$691,722	17.36%	**	$120,081	$92,048	$5.90	0.001%	0.005%
5122	Sound Recording Industries	$1,534,574	3,172	$483,788	6.35%	**	$30,727	$26,785	$8.44	0.002%	0.027%
5151	Radio and Television Broadcasting	$1,953,574	3,564	$548,141	8.41%	*	$46,085	$45,001	$12.63	0.002%	0.027%
5152	Cable and Other Subscription Programming	$340,677	298	$1,143,210	7.05%	*	$80,543	$13,774	$46.22	0.004%	0.057%
5161	Internet Publishing and Broadcasting	$2,334,733	2,086	$1,119,239	7.05%	*	$78,854	$18,897	$9.06	0.001%	0.011%

Table V-33, contd.
Cost Impacts on Very Small Business Entities (fewer than 20 employees) Affected by OSHA's Proposed Revision to Subparts D and I (per Entity, by 4-Digit NAICS Code)

NAICS	Industry	Estimated Receipts, 2006 ($1,000)[a]	Entities [b]	Average Receipts per Entity	Profit Rate [c]		Estimated Profits per Entity	Estimated Cost of the Proposed Rule	Average Cost per Entity	Ratio of Average Cost to Revenues	Ratio of Average Cost to Profits
5171	Wired Telecommunications Carriers	$2,668,487	1,828	$1,459,785	7.40%	*	$108,001	$96,989	$53.06	0.004%	0.049%
5172	Wireless Telecommunications Carriers (except Satellite)	$1,851,991	2,209	$838,384	6.69%	*	$56,059	$59,605	$26.98	0.003%	0.048%
5173	Telecommunications Resellers	$2,053,531	1,956	$1,049,862	6.69%	*	$70,200	$20,251	$10.35	0.001%	0.015%
5174	Satellite Telecommunications	$493,742	349	$1,414,733	6.69%	*	$94,597	$16,360	$46.88	0.003%	0.050%
5175	Cable and Other Program Distribution	$900,917	938	$960,466	6.69%	*	$64,222	$11,195	$11.93	0.001%	0.019%
5179	Other Telecommunications	$402,683	375	$1,073,822	6.69%	*	$71,802	$7,398	$19.73	0.002%	0.027%
5181	Internet Service Providers and Web Search Portals	$2,569,384	4,407	$583,023	6.69%	*	$38,984	$25,253	$5.73	0.001%	0.015%
5182	Data Processing, Hosting, and Related Services	$3,826,822	5,747	$665,882	7.45%	*	$49,578	$38,357	$6.67	0.001%	0.013%
5191	Other Information Services	$977,138	2,858	$341,896	7.45%	*	$25,456	$23,997	$8.40	0.002%	0.033%
5211	Monetary Authorities - Central Bank	$172,607	41	$4,209,924	8.94%	*	$376,384	$134	$3.27	0.000%	0.001%

Table V-33, contd.
Cost Impacts on Very Small Business Entities (fewer than 20 employees) Affected by OSHA's Proposed Revision to Subparts D and I (per Entity, by 4-Digit NAICS Code)

NAICS	Industry	Estimated Receipts, 2006 ($1,000)[a]	Entities [b]	Average Receipts per Entity	Profit Rate [c]		Estimated Profits per Entity	Estimated Cost of the Proposed Rule	Average Cost per Entity	Ratio of Average Cost to Revenues	Ratio of Average Cost to Profits
5221	Depository Credit Intermediation	$11,350,517	7,957	$1,426,482	15.59%	*	$222,413	$33,848	$4.25	0.000%	0.002%
5222	Nondepository Credit Intermediation	$14,904,489	21,695	$687,001	11.43%	*	$78,522	$59,515	$2.74	0.000%	0.003%
5223	Activities Related to Credit Intermediation	$12,461,500	26,458	$470,992	9.01%	**	$42,442	$87,199	$3.30	0.001%	0.008%
5231	Securities and Commodity Contracts Intermediation and Brokerage	$12,164,444	12,099	$1,005,409	10.15%	*	$102,072	$61,188	$5.06	0.001%	0.005%
5232	Securities and Commodity Exchanges	$191,152	110	$1,737,742	10.11%	*	$175,691	$516	$4.69	0.000%	0.003%
5239	Other Financial Investment Activities	$30,889,815	39,095	$790,122	10.11%	*	$79,884	$107,623	$2.75	0.000%	0.003%
5241	Insurance Carriers	$9,280,142	6,133	$1,513,149	28.35%	*	$429,009	$20,639	$3.37	0.000%	0.001%
5242	Agencies, Brokerages, and Other Insurance Related Activities	$51,888,775	125,791	$412,500	5.12%	*	$21,110	$198,180	$1.58	0.000%	0.007%
5259	Other Investment Pools and Funds	$4,409,909	1,957	$2,253,403	5.12%	*	$115,317	$6,908	$3.53	0.000%	0.003%
5311	Lessors of Real Estate	$64,393,740	93,546	$688,364	64.80%	*	$446,050	$437,293	$4.67	0.001%	0.001%
5312	Offices of Real Estate Agents and Brokers	$58,113,104	103,231	$562,942	13.34%	*	$75,118	$400,307	$3.88	0.001%	0.005%
5313	Activities Related to Real Estate	$27,396,855	66,691	$410,803	9.66%	*	$39,672	$349,555	$5.24	0.001%	0.013%

Table V-33, contd.
Cost Impacts on Very Small Business Entities (fewer than 20 employees) Affected by OSHA's Proposed Revision to Subparts D and I (per Entity, by 4-Digit NAICS Code)

NAICS	Industry	Estimated Receipts, 2006 ($1,000)[a]	Entities [b]	Average Receipts per Entity	Profit Rate [c]		Estimated Profits per Entity	Estimated Cost of the Proposed Rule	Average Cost per Entity	Ratio of Average Cost to Revenues	Ratio of Average Cost to Profits
5321	Automotive Equipment Rental and Leasing	$3,292,219	4,120	$799,082	13.34%	**	$106,627	$19,741	$4.79	0.001%	0.004%
5322	Consumer Goods Rental	$4,071,412	11,393	$357,361	3.20%	*	$11,433	$50,436	$4.43	0.001%	0.039%
5323	General Rental Centers	$1,674,477	2,984	$561,152	4.58%	*	$25,683	$16,334	$5.47	0.001%	0.021%
5324	Commercial and Industrial Machinery and Equipment Rental and Leasing	$6,848,009	7,333	$933,862	4.58%	**	$42,741	$50,405	$6.87	0.001%	0.016%
5331	Lessors of Nonfinancial Intangible Assets (except Copyrighted Works)	$2,649,989	1,829	$1,448,873	6.44%	*	$93,372	$5,544	$3.03	0.000%	0.003%
5411	Legal Services	$82,265,064	172,259	$477,566	31.10%	**	$148,544	$501,898	$2.91	0.001%	0.002%
5412	Accounting, Tax Preparation, Bookkeeping, and Payroll Services	$29,629,156	100,204	$295,688	8.85%	**	$26,159	$477,643	$4.77	0.002%	0.018%
5413	Architectural, Engineering, and Related Services	$47,192,342	89,960	$524,593	8.74%	**	$45,875	$677,538	$7.53	0.001%	0.016%
5414	Specialized Design Services	$15,325,203	32,491	$471,675	4.81%	**	$22,675	$160,943	$4.95	0.001%	0.022%

Table V-33, contd.
Cost Impacts on Very Small Business Entities (fewer than 20 employees) Affected by OSHA's Proposed Revision to Subparts D and I (per Entity, by 4-Digit NAICS Code)

NAICS	Industry	Estimated Receipts, 2006 ($1,000)[a]	Entities [b]	Average Receipts per Entity	Profit Rate [c]		Estimated Profits per Entity	Estimated Cost of the Proposed Rule	Average Cost per Entity	Ratio of Average Cost to Revenues	Ratio of Average Cost to Profits
5415	Computer Systems Design and Related Services	$40,080,133	92,442	$433,571	6.41%	**	$27,772	$563,590	$6.10	0.001%	0.022%
5416	Management, Scientific, and Technical Consulting Services	$56,399,491	130,867	$430,968	5.96%	**	$25,698	$698,904	$5.34	0.001%	0.021%
5417	Scientific Research and Development Services	$9,386,971	10,458	$897,588	7.95%	**	$71,354	$88,030	$8.42	0.001%	0.012%
5418	Advertising and Related Services	$21,120,642	32,970	$640,602	8.66%	**	$55,502	$2,488,575	$75.48	0.012%	0.136%
5419	Other Professional, Scientific, and Technical Services	$28,309,467	59,744	$473,846	5.61%	**	$26,563	$292,251	$4.89	0.001%	0.018%
5511	Management of Companies and Enterprises	$11,224,566	5,747	$1,953,117	7.10%	**	$138,734	$37,706	$6.56	0.000%	0.005%
5611	Office Administrative Services	$12,118,706	20,907	$579,648	14.63%	*	$84,813	$111,475	$5.33	0.001%	0.006%
5612	Facilities Support Services	$583,310	964	$605,093	4.46%	*	$26,988	$8,440	$8.76	0.001%	0.032%
5613	Employment Services	$6,016,114	14,182	$424,208	4.46%	**	$18,920	$85,318	$6.02	0.001%	0.032%
5614	Business Support Services	$10,753,445	26,155	$411,143	2.65%	*	$10,887	$127,182	$4.86	0.001%	0.045%

Table V-33, contd.
Cost Impacts on Very Small Business Entities (fewer than 20 employees) Affected by OSHA's Proposed Revision to Subparts D and I (per Entity, by 4-Digit NAICS Code)

NAICS	Industry	Estimated Receipts, 2006 ($1,000)[a]	Entities [b]	Average Receipts per Entity	Profit Rate [c]		Estimated Profits per Entity	Estimated Cost of the Proposed Rule	Average Cost per Entity	Ratio of Average Cost to Revenues	Ratio of Average Cost to Profits
5615	Travel Arrangement and Reservation Services	$5,459,301	16,178	$337,452	4.46%	**	$15,051	$73,862	$4.57	0.001%	0.030%
5616	Investigation and Security Services	$5,415,118	15,858	$341,475	3.73%	*	$12,749	$103,358	$6.52	0.002%	0.051%
5617	Services to Buildings and Dwellings	$44,284,357	157,597	$280,997	4.46%	*	$12,533	$66,007,087	$418.83	0.149%	3.342%
5619	Other Support Services	$10,892,149	16,890	$644,887	4.46%	*	$28,763	$89,300	$5.29	0.001%	0.018%
5621	Waste Collection	$4,158,432	6,066	$685,531	5.83%	*	$39,956	$46,360	$7.64	0.001%	0.019%
5622	Waste Treatment and Disposal	$1,178,456	1,254	$939,758	4.61%	*	$43,312	$12,979	$10.35	0.001%	0.024%
5629	Remediation and Other Waste Management Services	$3,905,788	6,382	$612,001	4.61%	*	$28,206	$79,635	$12.48	0.002%	0.044%
6111	Elementary and Secondary Schools	$3,208,243	7,948	$403,654	4.61%	**	$18,604	$26,604	$3.35	0.001%	0.018%
6112	Junior Colleges	$91,743	190	$482,860	8.06%	**	$38,902	$922	$4.85	0.001%	0.012%
6113	Colleges, Universities, and Professional Schools	$517,093	798	$647,987	8.06%	**	$52,205	$3,909	$4.90	0.001%	0.009%
6114	Business Schools and Computer and Management Training	$2,784,832	5,953	$467,803	8.06%	**	$37,689	$20,664	$3.47	0.001%	0.009%
6115	Technical and Trade Schools	$2,487,317	5,624	$442,268	8.06%	**	$35,631	$26,018	$4.63	0.001%	0.013%

Table V-33, contd.
Cost Impacts on Very Small Business Entities (fewer than 20 employees) Affected by OSHA's Proposed Revision to Subparts D and I (per Entity, by 4-Digit NAICS Code)

NAICS	Industry	Estimated Receipts, 2006 ($1,000)[a]	Entities [b]	Average Receipts per Entity	Profit Rate [c]		Estimated Profits per Entity	Estimated Cost of the Proposed Rule	Average Cost per Entity	Ratio of Average Cost to Revenues	Ratio of Average Cost to Profits
6116	Other Schools and Instruction	$7,122,626	30,637	$232,484	8.06%	**	$18,730	$93,804	$3.06	0.001%	0.016%
6117	Educational Support Services	$2,286,099	5,479	$417,247	8.06%	**	$33,616	$19,884	$3.63	0.001%	0.011%
6211	Offices of Physicians	$119,068,918	172,296	$691,072	8.06%	*	$55,676	$643,955	$3.74	0.001%	0.007%
6212	Offices of Dentists	$73,670,884	115,748	$636,477	4.45%	*	$28,307	$392,128	$3.39	0.001%	0.012%
6213	Offices of Other Health Practitioners	$34,047,240	104,920	$324,507	7.34%	*	$23,822	$353,202	$3.37	0.001%	0.014%
6214	Outpatient Care Centers	$6,037,094	8,987	$671,759	8.13%	*	$54,610	$44,626	$4.97	0.001%	0.009%
6215	Medical and Diagnostic Laboratories	$5,870,390	6,215	$944,552	5.71%	*	$53,887	$28,579	$4.60	0.000%	0.009%
6216	Home Health Care Services	$3,269,216	8,985	$363,853	5.46%	*	$19,873	$37,189	$4.14	0.001%	0.021%
6219	Other Ambulatory Health Care Services	$2,197,879	3,890	$565,007	5.46%	*	$30,860	$18,201	$4.68	0.001%	0.015%
6221	General Medical and Surgical Hospitals	$771,204	140	$5,508,604	5.46%	**	$300,873	$739	$5.28	0.000%	0.002%
6222	Psychiatric and Substance Abuse Hospitals	$46,165	58	$795,944	5.38%	**	$42,831	$324	$5.58	0.001%	0.013%
6223	Specialty (except Psychiatric and Substance Abuse) Hospitals	$93,130	135	$689,853	5.38%	**	$37,122	$823	$6.10	0.001%	0.016%

Table V-33, contd.
Cost Impacts on Very Small Business Entities (fewer than 20 employees) Affected by OSHA's Proposed Revision to Subparts D and I (per Entity, by 4-Digit NAICS Code)

NAICS	Industry	Estimated Receipts, 2006 ($1,000)[a]	Entities [b]	Average Receipts per Entity	Profit Rate [c]		Estimated Profits per Entity	Estimated Cost of the Proposed Rule	Average Cost per Entity	Ratio of Average Cost to Revenues	Ratio of Average Cost to Profits
6231	Nursing Care Facilities	$1,275,511	2,032	$627,712	5.38%	**	$33,778	$8,003	$3.94	0.001%	0.012%
6232	Residential Mental Retardation, Mental Health and Substance Abuse Facilities	$1,249,694	3,904	$320,106	5.38%	**	$17,226	$16,193	$4.15	0.001%	0.024%
6233	Community Care Facilities for the Elderly	$2,775,128	9,635	$288,026	5.38%	**	$15,499	$31,939	$3.31	0.001%	0.021%
6239	Other Residential Care Facilities	$698,202	2,080	$335,674	5.38%	**	$18,063	$8,192	$3.94	0.001%	0.022%
6241	Individual and Family Services	$9,472,626	29,805	$317,820	5.38%	**	$17,103	$80,760	$2.71	0.001%	0.016%
6242	Community Food and Housing, and Emergency and Other Relief Services	$3,674,137	6,970	$527,136	5.38%	**	$28,366	$23,265	$3.34	0.001%	0.012%
6243	Vocational Rehabilitation Services	$946,646	2,407	$393,289	5.38%	**	$21,164	$7,658	$3.18	0.001%	0.015%
6244	Child Day Care Services	$8,345,592	49,004	$170,304	5.38%	**	$9,164	$122,439	$2.50	0.001%	0.027%
7111	Performing Arts Companies	$4,227,646	7,944	$532,181	5.38%	*	$28,638	$38,897	$4.90	0.001%	0.017%
7112	Spectator Sports	$2,180,804	3,761	$579,847	9.76%	*	$56,583	$17,459	$4.64	0.001%	0.008%

Table V-33, contd.
Cost Impacts on Very Small Business Entities (fewer than 20 employees) Affected by OSHA's Proposed Revision to Subparts D and I (per Entity, by 4-Digit NAICS Code)

NAICS	Industry	Estimated Receipts, 2006 ($1,000)[a]	Entities [b]	Average Receipts per Entity	Profit Rate [c]		Estimated Profits per Entity	Estimated Cost of the Proposed Rule	Average Cost per Entity	Ratio of Average Cost to Revenues	Ratio of Average Cost to Profits
7113	Promoters of Performing Arts, Sports, and Similar Events	$3,622,249	4,923	$735,781	9.76%	*	$71,799	$47,610	$9.67	0.001%	0.013%
7114	Agents and Managers for Artists, Athletes, Entertainers, and Other Public Figures	$2,354,758	3,318	$709,692	9.76%	*	$69,254	$13,105	$3.95	0.001%	0.006%
7115	Independent Artists, Writers, and Performers	$10,029,605	19,062	$526,157	9.76%	*	$51,344	$69,450	$3.64	0.001%	0.007%
7121	Museums, Historical Sites, and Similar Institutions	$2,024,339	5,519	$366,794	9.76%	**	$35,793	$21,583	$3.91	0.001%	0.011%
7131	Amusement Parks and Arcades	$740,564	1,921	$385,510	7.74%	*	$29,829	$8,668	$4.51	0.001%	0.015%
7132	Gambling Industries	$1,024,558	1,421	$721,012	6.33%	*	$45,636	$5,466	$3.85	0.001%	0.008%
7139	Other Amusement and Recreation Industries	$16,601,038	51,143	$324,600	6.33%	*	$20,545	$193,346	$3.78	0.001%	0.018%
7211	Traveler Accommodation	$14,764,010	33,190	$444,833	6.33%	*	$28,155	$174,820	$5.27	0.001%	0.019%
7212	RV (Recreational Vehicle) Parks and Recreational Camps	$2,567,079	6,059	$423,680	5.64%	*	$23,912	$27,937	$4.61	0.001%	0.019%
7213	Rooming and Boarding Houses	$562,031	2,077	$270,597	5.64%	*	$15,272	$8,645	$4.16	0.002%	0.027%

Table V-33, contd.
Cost Impacts on Very Small Business Entities (fewer than 20 employees) Affected by OSHA's Proposed Revision to Subparts D and I (per Entity, by 4-Digit NAICS Code)

NAICS	Industry	Estimated Receipts, 2006 ($1,000)[a]	Entities [b]	Average Receipts per Entity	Profit Rate [c]		Estimated Profits per Entity	Estimated Cost of the Proposed Rule	Average Cost per Entity	Ratio of Average Cost to Revenues	Ratio of Average Cost to Profits
7221	Full-Service Restaurants	$43,491,255	138,277	$314,523	5.64%	*	$17,751	$523,192	$3.78	0.001%	0.021%
7222	Limited-Service Eating Places	$36,973,551	138,820	$266,342	4.98%	*	$13,257	$330,432	$2.38	0.001%	0.018%
7223	Special Food Services	$3,796,612	12,449	$304,973	4.98%	*	$15,179	$73,194	$5.88	0.002%	0.039%
7224	Drinking Places (Alcoholic Beverages)	$10,512,053	41,469	$253,492	4.98%	*	$12,617	$120,972	$2.92	0.001%	0.023%
8111	Automotive Repair and Maintenance	$58,528,451	144,622	$404,700	4.98%	*	$20,143	$2,022,265	$13.98	0.003%	0.069%
8112	Electronic and Precision Equipment Repair and Maintenance	$4,397,630	10,849	$405,349	3.68%	*	$14,933	$153,210	$14.12	0.003%	0.095%
8113	Commercial and Industrial Machinery and Equipment (except Automotive and Electronic) Repair and Maintenance	$10,792,442	21,337	$505,809	5.17%	*	$26,167	$319,551	$14.98	0.003%	0.057%
8114	Personal and Household Goods Repair and Maintenance	$5,787,466	21,812	$265,334	5.17%	*	$13,727	$203,314	$9.32	0.004%	0.068%
8121	Personal Care Services	$14,061,459	90,681	$155,065	5.17%	*	$8,022	$220,794	$2.43	0.002%	0.030%
8122	Death Care Services	$8,082,879	14,892	$542,767	5.67%	*	$30,794	$79,455	$5.34	0.001%	0.017%

Table V-33, contd.
Cost Impacts on Very Small Business Entities (fewer than 20 employees) Affected by OSHA's Proposed Revision to Subparts D and I (per Entity, by 4-Digit NAICS Code)

NAICS	Industry	Estimated Receipts, 2006 ($1,000)[a]	Entities [b]	Average Receipts per Entity	Profit Rate [c]		Estimated Profits per Entity	Estimated Cost of the Proposed Rule	Average Cost per Entity	Ratio of Average Cost to Revenues	Ratio of Average Cost to Profits
8123	Dry-cleaning and Laundry Services	$7,114,322	32,044	$222,017	5.67%	*	$12,596	$157,751	$4.92	0.002%	0.039%
8129	Other Personal Services	$6,775,433	24,454	$277,069	5.67%	*	$15,720	$124,321	$5.08	0.002%	0.032%
8131	Religious Organizations	$37,868,483	156,829	$241,464	5.67%	*	$13,700	$800,794	$5.11	0.002%	0.037%
8132	Grantmaking and Giving Services	$22,193,695	12,660	$1,753,057	2.55%	*	$44,781	$54,804	$4.33	0.000%	0.010%
8133	Social Advocacy Organizations	$5,284,519	10,750	$491,583	2.55%	*	$12,557	$55,353	$5.15	0.001%	0.041%
8134	Civic and Social Organizations	$8,327,806	25,609	$325,191	2.55%	*	$8,307	$117,185	$4.58	0.001%	0.055%
8139	Business, Professional, Labor, Political, and Similar Organizations	$28,760,289	58,330	$493,062	2.55%	*	$12,595	$328,184	$5.63	0.001%	0.045%

[a] Estimated based on 2002 receipts and payroll data from U.S. Census Bureau, *Statistics of U.S. Businesses*, 2002 and payroll data from U.S. Census Bureau, Statistics of U.S. Businesses, 2006. Receipts were not available for 2006 at disaggregated industry levels, but were estimated assuming the ratio of receipts to payroll remained unchanged between 2002 and 2006.
[b] U.S. Census Bureau, *Statistics of U.S. Businesses*, 2006.
[c] Estimated from average of the yearly ratios of net income to total receipts as reported by the U.S. Internal Revenue Service, *Corporation Source Book, 2000 – 2006*. Data were not available at disaggregated levels for all industries; profit rates at more highly aggregated levels are used for such industries.
N/A: Data not available.

Table V-33, contd.
Cost Impacts on Very Small Business Entities (fewer than 20 employees) Affected by OSHA's Proposed Revision to Subparts D and I (per Entity, by 4-Digit NAICS Code)

NAICS	Industry	Estimated Receipts, 2006 ($1,000)[a]	Entities [b]	Average Receipts per Entity	Profit Rate [c]	Estimated Profits per Entity	Estimated Cost of the Proposed Rule	Average Cost per Entity	Ratio of Average Cost to Revenues	Ratio of Average Cost to Profits

*Profit rate imputed from corresponding 3-digit NAICS industry.
** Profit rate imputed from corresponding 2-digit NAICS industry.
Source: U.S. Dept. of Labor, OSHA, Directorate of Evaluation and Analysis, Office of Regulatory Analysis, based on ERG, 2007.

2. A Description of the Reasons Why Action by the Agency Is Being Considered

Employees in general industry performing construction, installation, maintenance, and repair tasks are exposed to a range of significant slip, trip, and fall hazards that can and do cause serious injury and death. OSHA estimates that approximately 300,000 serious injuries and 300 fatalities occur annually among these employees. Although some of these incidents may have been prevented with better compliance with existing safety standards, research and analyses conducted by OSHA have found that many preventable injuries and fatalities would continue to occur even if full compliance with the existing standards were achieved. Without counting incidents that would potentially have been prevented with compliance with existing standards, an estimated 3,706 additional injuries and 20 fatalities would be prevented annually through full compliance with the proposed standards.

As explained above, additional benefits associated with this rulemaking involve providing updated, clear, and consistent safety standards regarding fall protection in general industry to the relevant employers, employees, and interested members of the public. The existing OSHA standards for walking-working surfaces in general industry are over 30 years old and inconsistent with the more recently promulgated standards addressing fall protection in construction. OSHA believes that the proposed updated standards are easier to understand and to apply and will benefit employers and employees by facilitating compliance while improving safety.

3. Statement of the Objectives of, and Legal Basis for, the Proposed Rule

The primary objective of the proposed standards is to provide an increased degree of occupational safety for employees in general industry performing construction, installation, maintenance, and repair tasks. As stated above, an estimated 3,706 injuries and 20 fatalities would be prevented annually through compliance with the proposed standards in addition to those that may be prevented through compliance with existing standards. Another objective of the proposed rulemaking is to provide updated, clear, and consistent safety standards regarding fall protection in general industry to the relevant employers, employees, and interested members of the public. The proposed updated standards are easier to understand and to apply, and they will benefit employers by facilitating compliance while improving safety.

The legal basis for the proposed rule is the responsibility given the Department of Labor through the Occupational Safety and Health (OSH) Act of 1970 (29 U.S.C. 561 *et seq.*). The OSH Act authorizes and obligates the Secretary of Labor to promulgate mandatory occupational safety and health standards as necessary "to assure so far as possible every working man and woman in the Nation safe and healthful working conditions and to preserve our human resources." 29 U.S.C. 651(b). The legal authority can also be cited as 29 U.S.C. 655(b).

4. Description of and Estimate of the Number of Small Entities to Which the Proposed Rule Will Apply

OSHA has completed a preliminary analysis of the impacts associated with this proposal, including an analysis of the type and number of small entities to which the proposed rule would apply. The proposed standards would primarily impact workers performing construction, installation, maintenance, and repair tasks throughout general industry. To determine the number of small entities potentially affected by this rulemaking, OSHA used the definitions of small entities developed by the Small Business Administration for each industry. In section C of this PEA, OSHA discussed its methodology for determining the number of affected small entities and presented its estimates in Table V–2. As shown in that table, OSHA estimates that 5.1 million small entities, employing 43.5 million employees, including 9.3 million employees directly exposed to slip, trip, and fall hazards, would be covered by the scope of the proposed standard. Industries expected to have the highest number of affected at-risk employees include wired telecommunications carriers (606,000 employees); automotive repair and maintenance (480,000 employees); and lessors of real estate (231,000 employees).

5. Description of the Projected Reporting, Recordkeeping and Other Compliance Requirements of the Proposed Rule

OSHA is proposing to revise the standards addressing the work practices to be used, and other requirements to be followed, for the activities in general industry that expose workers to slip, trip, and fall hazards. The existing standards in subpart D deal with the hazards of walking and working surfaces and are part of the initial package of standards promulgated by OSHA in 1971 under section 6(a) of the Occupational Safety and Health Act of 1970 (the Act) (29 U.S.C. 655(a)). During the period since OSHA promulgated subpart D, interested parties have suggested changes in these regulations. The majority of the existing OSHA standards for walking-working surfaces are over 30 years old and inconsistent with numerous national consensus standards and more recently promulgated OSHA standards addressing fall protection elsewhere in general industry and construction.

Section E, Costs of Compliance, described, for categories of employee training, the administrative costs that are expected to present a new burden for affected employers. The costs to document the training and re-training of employees are not considered by OSHA to be recordkeeping, but rather are seen as typical administrative expenses in a safety program.

6. Federal Rules Which May Duplicate, Overlap, or Conflict With the Proposed Rule

OSHA has not identified any Federal rules which may duplicate, overlap, or conflict with the proposal, and requests comments from the public regarding this issue.

7. Alternatives to the Proposed Rule Which Accomplish the Stated Objectives of Applicable Statutes and Which Minimize Any Significant Economic Impact of the Proposed Rule on Small Entities

OSHA evaluated several alternatives to the proposed standards to ensure that the proposed requirements would accomplish the stated objectives of applicable statutes and would minimize any significant economic impact of the proposal on small entities. In developing the proposal, and especially in establishing compliance or reporting requirements or timetables that affect small entities, the resources available to small entities were taken into account. Compliance and reporting requirements under the proposal that are applicable to small entities were clarified, consolidated, and simplified to the extent practicable. Wherever possible, OSHA has proposed the use of performance rather than design standards. An exemption from coverage of the rule for small entities was not considered to be a viable option because the safety and health of the affected employees would be unduly jeopardized.

Many other specific alternatives to the proposed requirements were

considered. Section IV of the notice, Summary and Explanation of the Proposed Rule, provides discussion and explanation of the particular requirements of the proposal.

OSHA has made every effort to provide maximum flexibility in the choice of controls that are permitted under the proposed rule. To demonstrate the relative economic efficiency (*i.e.,* cost effectiveness) of the proposed standard, OSHA has selected eight provisions in proposed subpart D where alternative control strategies were considered but rejected as inefficient from a cost-effectiveness perspective. For these eight provisions, the table below presents OSHA's evaluation of the potential impacts associated with alternatives to the proposed requirements.

TABLE V–34—IMPACTS ASSOCIATED WITH REGULATORY ALTERNATIVES FOR SELECTED PROVISIONS IN PROPOSED SUBPART D

Provision	Primary-choice control(s)	Alternative control(s)	Potential impacts of alternative control(s)
Section 1910.23 Ladders.	Covers all ladders except for machine-integrated or fire fighting/rescue ladders.	All ladders in scope.	Probably not significant in costs, but not justified with respect to benefits.
Section 1910.24 Step bolts and manhole steps.	Design changes to step bolts and manhole steps on new installations must be performed 90 days after the standard's effective date.	Eliminate grandfathering of older structures.	Requirement to ensure that all step bolts and manhole steps meet the strength and design criteria in proposed subpart D would demand technical resources that could exceed the capacity of affected industries in the near term, given the need to inspect all existing manholes and make changes to many.
Section 1910.25 Stairways.	Where ship stairs and spiral stairs are used as primary means of egress, they must meet the requirements specified by the standard.	Prohibit ship stairs and spiral stairs in all new installations.	Potentially large costs with few benefits.
Section 1910.26 Dockboards (bridge plates).	In paragraph (b), OSHA proposes that dockboards put into service at least 90 days after the effective date of the final rule be designed, constructed, and maintained to prevent equipment (such as hand trucks and vehicles) from running off the edge.	Specify the means of achieving the desired performance.	Probably modest costs but with few benefits.
Section 1910.27 Scaffolds and rope descent systems.	Proposed paragraph (b)(1) prohibits the use of a rope descent system (RDS) at heights greater than 300 feet (91.4 m) above grade unless access cannot otherwise be attained safely and practicably.	Allow use of RDS at all heights.	OSHA states earlier in this PEA that impacts of the primary choice would be minor due to current availability of powered platforms or other systems for washing windows on tall buildings. OSHA requests comment on this assessment.
Section 1910.28 Duty to have fall protection.	The proposed rule allows employers to choose from several options in providing fall protection. These include conventional fall protection systems such as guardrail systems, safety net systems, and personal fall protection systems (restraint systems, personal fall arrest systems, and positioning systems) and, in some instances, non-conventional means. An example of non-conventional means would be the establishment of a designated area in which an employee is to work.	Specify, surface by surface, the means of achieving the desired performance.	Depending on specifications, costs could be substantial with modest benefits.
Section 1910.28 Duty to have fall protection.	Proposed paragraph (b)(8) is a new provision, proposed to address the specific fall hazard created by vehicle repair pits and assembly pits. Access to the edge (within 6 feet (1.8 m)) of the pit must be limited to trained, authorized employees ((b)(8)(i)); the floor must be marked ((b)(8)(ii)) to designate the unprotected area; and caution signs must be posted to warn employees of the unprotected area ((b)(8)(iii)).	Require conventional fall protection systems: guardrails, personal fall arrest or travel restraint systems.	Potentially significant costs with feasibility/practicability concerns.
Section 1910.28 Duty to have fall protection.	In proposed paragraph (b)(9), OSHA addresses fall hazards related to fixed ladders. Under the proposed standard, no fall protection is required when employees are exposed to falls from fixed ladders of 24 feet (7.3 m) in length or less. If the employer chooses a cage or well, no ladder sections may exceed 50 feet (15.2 m) in length, and each section must be offset from adjacent sections with landing platforms at maximum intervals of 50 feet (15.2 m). If an employer chooses a ladder safety system, no additional measures are proposed.	For fixed ladders, require that cages, wells, and landing platforms be provided, but disallow the use of ladder safety systems.	Major costs and modest benefits; tens of thousands of fixed ladders would need cages, wells, and landing platforms.

Source: U.S. Dept. of Labor, OSHA, Directorate of Evaluation and Analysis, Office of Regulatory Analysis.

Non-regulatory alternatives were also considered in determining the appropriate approach to reducing occupational hazards associated with work on elevated or slippery surfaces in general industry. These alternatives were discussed in the section of this PEA entitled "Examination of Alternative Approaches."

I. References

American National Standard Institute/International Window Cleaning Association. (ANSI/IWCA, 2001.) Window Cleaning Safety. IWCA I–14.1–2001, October 2001.

Amodeo, Linda. (Amodeo, 2003.) Comments submitted to OSHA Docket S029, Exhibit 3–14, Linda Amodeo, Vice President, City Wide Building Services, Inc., July 24, 2003.

Bureau of Labor Statistics. (BLS, 2007.) Consumer Price Index, All Urban Consumers, U.S. City Average, June 15, 2007. *ftp://ftp.bls.gov/pub/special.requests/cpi/cpiai.txt.*

Bureau of Labor Statistics. (BLS, 2008.) Occupational Employment Statistics, 2008. *http://www.bls.gov/oes/home.htm.*

Bureau of Labor Statistics. (BLS, 2008.) Job Openings and Labor Turnover Survey, 2008.

Cohen, Alexander and Michael Colligan. (Cohen and Colligan, 1998.) *Assessing Occupational Safety and Health Training: A Literature Review.* DDHS (NIOSH) Publication 98–145, June 1998.

Council on Tall Buildings and Urban Habitat. (CTBUH, 2006.) Web Site: *http://www.ctbuh.org/.* Accessed 23 August 2006. Database hosted by Emporis. *http://buildings.emporis.com/?nav=theplatformconcept&lng=3.* Accessed by ERG on August 23, 2006.

Department of Energy. (DOE, 2006.) 2003 Commercial Buildings Energy Consumption Survey. Table B10: Number of Floors, Number of Buildings and Floorspace for Non-Mall Commercial Buildings. Energy Information Administration, 2006. *http://www.eia.doe.gov/emeu/cbecs/cbecs2003/detailed_tables_2003/detailed_tables_2003.html.*

Department of Energy. (DOE, 2004.) 2001 Residential Energy Consumption Surveys. 2001 Housing Characteristics Tables. Table HC1–1a. Housing Unit Characteristics by Climate Zone, Million U.S. Households, (2001). Energy Information Administration, 2004. *http://www.eia.doe.gov/emeu/recs/recs2001/detail_tables.html.*

DiChacho, Rosita. (DiChacho. 2006.) Personal communication between Rosita DiChacho, New York Department of Labor, Division of Safety & Health, Engineering Services Unit and Maureen F. Kaplan, Eastern Research Group, August 23, 2006.

Eastern Research Group, Inc. (ERG, 2007.) *Technical and Analytical Support and Docket Review for OSHA's Preliminary Analysis of Costs, Benefits, and Economic Impacts for OSHA's Proposed Standard for Walking and Working Surfaces.* Final Report. Prepared under Contract No. GS10F0125P for the U.S. Dept. of Labor, Occupational Safety and Health Administration, Directorate of Evaluation and Analysis, Office of Regulatory Analysis, July 27, 2007. (Ex. 6.)

Eastern Research Group, Inc. (ERG, 1999.) *PPE Cost Survey: Final Report.* Prepared under Contract No. J–9–F–9–0010 for the U.S. Dept. of Labor, Occupational Safety and Health Administration, Office of Regulatory Analysis, June 23, 1999. Docket No. S–042, Exhibit 14 (Ex. OSHA–S042–2006–0667–0318).

Institute of Electrical and Electronics Engineers. (IEEE, 2006.) IEEE Standard for Fall Protection for Utility Work. IEEE Standard 1307–2004. *http://standards.ieee.org/reading/ieee/std/numerical.html.* Accessed by ERG on July 24, 2006.

Kreidenweis, Andy. (Kreidenweis, 2003.) Comments submitted to OSHA Docket S–029, Exhibit 3–126, Andy Kreidenweis, Braco Window Cleaning Service Inc., July 30, 2003.

Lebel, Marc. (Lebel, 2003.) Comments submitted to OSHA Docket S–029, Exhibit 3–1. Marc Lebel, Pro-Bel Enterprises Limited, July 18, 2003.

National Association of Tower Erectors. (NATE, 2006.) Web site: *http://www.natehome.com/MemberBenefitsServices/NATECLIMBERTRAININGSTANDARD/Index.cfm).* Accessed by ERG on July 24, 2006.

National Coalition Against the Misuses of Pesticides. (NCAMP, 1997.) Poison Poles—A Report About Their Toxic Trail and Safer Alternatives. Estimate of Pole Miles and Distribution Poles by State, 1997. *http://www.ncamp.org/poisonpoles/tables/table2.html.*

National Cooperative Highway Research Program. (NCHRP, 2004.) NCHRP Report 500: Guidance for Implementation of the AASHTO Strategic Highway Safety Plan. Volume 8: A Guide for Reducing Collisions Involving Utility Poles. Transportation Research Board, 2004. *http://safety.transportation.org/htmlguides/utl_pole/exec_sum.htm.*

National Fire Protection Association. (NFPA, 2006.) Standard 101. Life Safety Code. 2006 Edition. 7.2.2.2.3 Spiral stairs. *http://www.nfpa.org/freecodes/free_access_document.asp.* Accessed by ERG on July 24, 2006.

National Institute for Occupational Safety and Health. (NIOSH, 1988.) U.S. Department of Health and Human Services. Centers for Disease Control. National Institute for Occupational Safety and Health. *National Occupational Exposure Survey.* Volume III: *Analysis of Management Interview Responses,* March 1988.

Occupational Safety and Health Administration. (OSHA, 2009.) Analysis of OSHA Integrated Management Information System inspection data, 1995–2001. January 2009.

Occupational Safety and Health Administration. (OSHA, 2007.) Accident Investigation Search, 2007. *http://www.osha.gov/pls/imis/accidentsearch.html.*

Occupational Safety and Health Administration. (OSHA, 2006a.) Accident Investigation Search, 2006. *http://www.osha.gov/pls/imis/accidentsearch.html.*

Occupational Safety and Health Administration. (OSHA, 2006b.) Standard Interpretations: 2/10/2006—The use of ship's stairs instead of fixed stairs in general industry. *http://www.osha.gov/pls/oshaweb/owadisp.show_document?p_table=INTERPRETATIONS&p_id=25301.* Accessed by ERG on July 24, 2006.

Occupational Safety and Health Administration. (OSHA, 2006c.) Standard Interpretations: 2/10/2006—Circumstances under which installation of fixed industrial stairs with a slope between 50 degrees and 70 degrees from the horizontal would be considered a de minimis violation. *http://www.osha.gov/pls/oshaweb/owadisp.show_document?p_table=INTERPRETATIONS&p_id=25299.* Accessed by ERG on July 24, 2006.

Occupational Safety and Health Administration. (OSHA, 2006d.) OSHA Web site. Resource Center Loan Program. Materials by subject. *http://www.osha.gov/dcsp/ote/resource-center/loan.html.* Accessed by ERG on July 28.

Occupational Safety and Health Administration. (OSHA, 2003.) Standard Interpretations: 05/05/2003—Standards applicable to step bolts and manhole steps; load requirements for step bolts. *http://www.osha.gov/pls/oshaweb/owadisp.show_document?p_table=INTERPRETATIONS&p_id=24564* corrected 4/4/2005. Accessed by ERG on July 24, 2006.

Occupational Safety and Health Administration. (OSHA, 2003.) 29 CFR Part 1910 Walking and Working Surfaces; Personal Protective equipment (Fall Protection Systems); Proposed Rule. **Federal Register** 68: 23528–23568, May 2, 2003.

Occupational Safety and Health Administration. (OSHA, 1996.) 29 CFR Part 1926. Safety Standards for Scaffolds Used in the Construction Industry; Final Rule. **Federal Register** 61: 46026–46126, August 30, 1996.

Occupational Safety and Health Administration. (OSHA, 1994.) Background Document to the Regulatory Impact and Regulatory Flexibility Assessment for the PPE Standard. Office of Regulatory Analysis, March 15, 1994. Docket S–060, Exhibit 56.

Occupational Safety and Health Administration. (OSHA, 1993.) Fixed Ladders Used on Outdoor Advertising Structures/Billboards in the Outdoor Advertising Industry. OSHA Instruction STD 1–1.14, January 26, 1993. *http://www.osha.gov/pls/oshaweb/owadisp.show_document?p_table=DIRECTIVES&p_id=1756.* Accessed by ERG on August 25, 2006.

Occupational Safety and Health Administration. (OSHA, 1991a.)

December 5, 1989, letter from Mr. Thomas J. Shepich to Mr. Carl Pedersen regarding Descent Control Devices. Memorandum to Regional Administrators from Patricia K. Clark, Director, Directorate of Compliance Programs, March 12, 1991. OSHA Docket S–029, Exhibit 1–18.

Occupational Safety and Health Administration. (OSHA, 1991b.) Grant of Variance. **Federal Register** 56: 8801, March 1, 1991. *http://www.osha.gov/pls/oshaweb/owadisp.show_document?p_table=FEDERAL_REGISTER&p_id=13148.* Accessed by ERG on August 26, 2006.

Occupational Safety and Health Administration. (OSHA, 1990a.) Preliminary Regulatory Impact and Regulatory Flexibility Analysis of Proposed Subparts D and I of 29 CFR Part 1910 Walking and Working Surfaces. Occupational Safety and Health Administration, Office of Regulatory Analysis, March 6, 1990. OSHA Docket S–029, Exhibit 4.

Occupational Safety and Health Administration. (OSHA, 1990a.) Application of Gannett Outdoor Companies for a Variance Concerning Fixed Ladders. **Federal Register** 55: 26796–26797, June 29, 1990. *http://www.osha.gov/pls/oshaweb/owadisp.show_document?p_table=FEDERAL_REGISTER&p_id=13085.* Accessed by ERG on August 25, 2006.

Occupational Safety and Health Administration. (OSHA, 1981.) Occupational Safety and Health Administration. Standard Interpretations: 12/02/1981. Alternating tread type stair is approved as safe for use. *http://www.osha.gov/pls/oshaweb/owadisp.show_document?p_table=INTERPRETATIONS&p_id=18983.* Accessed by ERG on July 24, 2006.

Office of Management and Budget. (OMB, 2005.) Regulatory Reform of the U.S. Manufacturing Sector. *http://www.whitehouse.gov/OMB/inforeg/reports/manufacturing_initiative.pdf.* Accessed by ERG on July 24, 2006.

Office of Management and Budget. (OMB, 2003.) *Regulatory Analysis.* Circular A–4, September 17, 2003. *http://www.whitehouse.gov/omb/circulars/a004/a-4.pdf.*

Office of Management and Budget. (OMB, 2002.) *North American Industry Classification System—2002.* Executive Office of the President, 2002.

Platts.com. (Platts, 2007.) *2007 UDI Directory of Electric Power Producers and Distributors.* 115th Edition of the Electrical World Directory. The McGraw-Hill Companies, 2007.

Small Business Administration. (SBA, 1996.) Regulatory Flexibility Act of 1980 (Pub. L. 96–354), amended by the Small Business Regulatory Enforcement Fairness Act of 1996 (Pub. L. 104–121).

Small Business Administration. (SBA, 2006.) *Table of Small Business Size Standards Matched to North American Industry Classification System Codes, 2006. http://www.sba.gov/idc/groups/public/documents/sba_homepage/serv_sstd_tablepdf.pdf.*

U.S. Census Bureau. (Census Bureau, 2002/2006.) *Statistics of U.S. Businesses, 2002/2006. http://www.census.gov/csd/susb/index.html.*

U.S. Environmental Protection Agency. (U.S. EPA, 2000.) *Guidelines for Preparing Economic Analyses.* EPA 240–R–00–003, September 2000. *http://yosemite.epa.gov/ee/epa/eed.nsf/webpages/Guidelines.html;* Chapter 7 also available in OSHA Docket No. H–054a, Exhibit 35–334.

U.S. Internal Revenue Service. (IRS, 2003.) *Corporation Source Book, 2003. http://www.irs.gov/taxstats/bustaxstats/article/0,,id=149687,00.html.*

Viscusi, Kip and Joseph Aldy. (Viscusi and Aldy, 2003.) "The Value of a Statistical Life: A Critical Review of Market Estimates Throughout the World." *The Journal of Risk and Uncertainty,* 27–1 (2003): 5–76.

Workers' Compensation Research Institute. (WCRI, 1993.) "Income Replacement in California." WCRI Research Brief; Special Edition. Volume 9, number 4S, Cambridge, MA, December 1993. Also available in OSHA Docket S–777, Exhibit 26–1608.

Wright, Michael C. (Wright, 2003.) Comments submitted to OSHA Docket S–029, Exhibit 4–19, Michael C Wright, LJB, Inc., July 23, 2007.

Zeolla, Robert J. (Zeolla, 2003) Comments submitted to OSHA Docket S–029, Exhibit 4–6, Robert J. Zeolla, Jr., President, Sunset Window Cleaning Company. June 5, 2003.

VI. Applicability of Existing National Consensus Standards

Section 6(b)(8) of the Occupational Safety and Health Act of 1970 ("the Act"; 29 U.S.C. 655(b)(8)) requires OSHA to explain "why a rule promulgated by the Secretary differs substantially from an existing national consensus standard," by publishing "a statement of the reasons why the rule as adopted will better effectuate the purposes of the Act than the national consensus standard." The Agency is not proposing to adopt any of the 34 national consensus standards listed in the Reference section of the proposal because the Agency believes that it is too difficult and costly for employers, especially employers in small businesses, to determine which of these national consensus standards apply to their workplaces, and then to collate and organize the relevant standards for compliance purposes. In this regard, no single, national consensus standard would fully address all of the fall hazards found in most of these workplaces.

VII. OMB Review Under the Paperwork Reduction Act of 1995

The proposed Walking-Working Surfaces and Personal Protective Equipment (Fall Protection PPE) Standard contains collection of information (paperwork) requirements that are subject to review by the Office of Management and Budget ("OMB") under the Paperwork Reduction Act of 1995 ("PRA–95"), 44 U.S.C. 3501 *et seq.,* and OMB's regulations at 5 CFR part 1320. The Paperwork Reduction Act defines a "collection of information" as "the obtaining, causing to be obtained, soliciting, or requiring the disclosure to third parties or the public of facts or opinions by or for an agency regardless of form or format" (44 U.S.C. 3502(3)(A)). OSHA has OMB approval for the existing paperwork requirements contained in both the Walking and Working Surfaces Standard, and in the Personal Protective Equipment Standard in two separate Information Collection Requests (ICRs) titled, Standard on Walking-Working Surfaces (29 CFR part 1910, subpart D) OMB control number 1218–0199, and Personal Protective Equipment (PPE) for General Industry (29 CFR part 1910, subpart I), OMB Control number 1218–2005.

OSHA has submitted both ICRs addressing the collection of information requirements identified in this Notice of Proposed Rulemaking (NPRM) to OMB for review (44 U.S.C. 3507(d)). OSHA solicits comments on the collection of information requirements and the estimated burden hours associated with these collections, including comments on the following:

- Whether the proposed collection of information requirements are necessary for the proper performance of the Agency's functions, including whether the information is useful;
- The accuracy of OSHA's estimate of the burden (time and cost) of the information collection requirements, including the validity of the methodology and assumptions used;
- Ways to enhance the quality, utility, and clarity of the information collected; and
- Ways to minimize the burden on employers who must comply, for example, by using automated or other technological techniques for collecting and transmitting information.

The title, a description of the need for and proposed use of the information, a description of the likely respondents, and the proposed frequency of response to the information collections are described below for the collection of information requirements in the proposed revisions to subparts D and I,

along with an estimate of the annual reporting burden and cost.

• For proposed 29 CFR part 1910, subpart D:

Type of Review: Revision of a currently approved collection.

Title: Standard on Walking-Working Surfaces (29 CFR part 1910, subpart D).

OMB Control Number: 1218–0199.

Description and Proposed Use of the Collections of Information: The proposed standard would impose new information collection requirements for purposes of PRA–95 and removes collection of information requirements in the existing standard (*see* 1218–0199). The collection of information requirements in the proposed standard have not been approved by OMB. These two proposed requirements are described in the following paragraphs.

Proposed § 1910.23(b)(10) requires employers to place "Do Not Use" or similar language on signs on ladders with structural or other defects in accordance with § 1910.145 (Specifications for accident prevention signs and tags). This provision is necessary to protect workers from defective ladders.

Under proposed § 1910.28(b)(8), employers need not provide fall protection to employees who are exposed to falling into automotive, repair, or assembly pits provided certain conditions are met, including a requirement to post a caution sign stating "Caution—Open Floor" or similar legend to warn of the fall hazard. (*See* proposed § 1910.28(b)(8)(iii)). These signs provide warning to employees who are exposed to fall hazards in repair, service, and assembly pits.

Affected Public: Business or other for-profit.

Number of Respondents: 62,310.

Frequency: On occasion.

Average Time per Response: 3 minutes.

Estimated Total Burden Hours: 3,116 hours.

Estimated Costs (Operation and Maintenance): $0.

• For proposed 29 CFR part 1910, subpart I:

Type of Review: Revision of a currently approved collection.

Title: Personal Protective Equipment (PPE) for General Industry (29 CFR part 1910, subpart I).

OMB Control Number: 1218–0205.

Description and Proposed Use of the Collections of Information: The proposed standard would expand the burden of the currently approved information collection requirements (*see* 1218–0205) because the proposed standard would impose new information collection requirements for purposes of PRA–95. The two collection of information requirements in the proposed standard, described in the following paragraphs, have not been approved by OMB.

Paragraph (d) of existing § 1910.132 requires employers to conduct a hazard assessment of the workplace to determine if there are certain hazards from which employees can be protected through the use of PPE; namely eye and face, foot, head, and hand hazards. Under the proposal, this provision would be expanded to add fall hazards to the list of hazards covered by the workplace assessment, thus requiring employers to determine if there are any fall hazards from which employees can be protected by the use of fall protection PPE. This provision is necessary to protect workers from fall hazards.

Likewise, under existing § 1910.132(f), employers must provide training for each employee who was identified in the hazard assessment as needing to use fall protection. The proposed revision would expand the current requirement to include training employees who would be using fall protection PPE. Also, under existing § 1910.132(f)(3), employers must provide retaining when there is reason to believe that any previously trained employee does not have the understanding and skill to use PPE properly, and existing paragraph (f)(4) of § 1910.132 requires that employers certify that employees have received and understood the required PPE training. The training certification must include the name of the employee(s) trained, the date(s) of training, and the subject of the certification (i.e., a statement identifying the document as a certification of training in the use of PPE). The proposed revision would expand the certification record to include employees who have been trained in the use of PPE for fall protection.

The proposed revisions would result in the initial (first year) burden outlined below. After the first year, however, the burden will be significantly lower.

Affected Public: Business or other for-profit.

Number of Respondents: 1.3 million establishments.

Frequency: On occasion.

Average Time per Response: Ranges from three minutes to document and maintain training records, to four hours for larger establishments to do a hazard assessment to include identification of fall hazards.

Estimated Total Burden Hours: 5.1 million burden hours.

Estimated Costs (Operation and Maintenance): $0.

Submitting comments. Members of the public who wish to comment on the paperwork requirements in this proposal must send their written comments to the Office of Information and Regulatory Affairs, Attn: OSHA Desk Officer (RIN 1218–AB80), Office of Management and Budget, Room 10235, 725 17th Street NW., Washington, DC 20503. The Agency encourages commenters to also submit their comments on these paperwork requirements to the rulemaking docket (Docket Number OSHA–2007–0072), along with their comments on other parts of the proposed rule. For instructions on submitting these comments to the rulemaking docket, *see* the sections of this **Federal Register** notice titled **DATES** and **ADDRESSES.** Comments submitted in response to this notice are public records; therefore, OSHA cautions commenters about submitting personal information such as Social Security numbers and date of birth.

Docket and inquiries. To access the docket to read or download comments and other materials related to this paperwork determination, including the complete Information Collection Request (ICR) (containing the Supporting Statement with attachments describing the paperwork determinations in detail), use the procedures described under the section of this notice titled **ADDRESSES.** You also may obtain an electronic copy of the complete ICR by visiting the Web page at *http://www.reginfo.gov/public/do/PRAMain,* scroll under "Currently Under Review" to "Department of Labor (DOL)" to view all of the DOL's ICRs, including those ICRs submitted for proposed rulemakings. To make inquiries, or to request other information, contact Ms. Theda Kenney, Directorate of Standards and Guidance, OSHA, Room N–3609, U.S. Department of Labor, 200 Constitution Avenue, NW., Washington, DC 20210; telephone (202) 693–2222.

The Department notes that a Federal agency cannot conduct or sponsor a collection of information unless it is approved by OMB under the PRA and displays a currently valid OMB control number, and the public is not required to respond to a collection of information unless it displays a currently valid OMB control number. Also, not withstanding any other provisions of law, no person shall be subject to penalty for failing to comply with a collection of information if the collection of information does not display a currently valid OMB control number.

VIII. Federalism

OSHA reviewed this NPRM in accordance with the Executive Order on Federalism (Executive Order 13132, 64 FR 43255, August 10, 1999), which requires that Federal agencies, to the extent possible, refrain from limiting State policy options, consult with States prior to taking any actions that would restrict State policy options, and take such actions only when clear constitutional authority exists and the problem is national in scope. Executive Order 13132 provides for preemption of State law only with the expressed consent of Congress. Any such preemption must be limited to the extent possible.

Under section 18 of the Occupational Safety and Health Act of 1970 ("OSH Act"; U.S.C. 651 *et seq.*), Congress expressly provides that States may adopt, with Federal approval, a plan for the development and enforcement of occupational safety and health standards; States that obtain Federal approval for such a plan are referred to as "State-Plan States." (29 U.S.C. 667.) Occupational safety and health standards developed by State-Plan States must be at least as effective in providing safe and healthful employment and places of employment as the Federal standards. Subject to these requirements, State-Plan States are free to develop and enforce their own requirements for occupational safety and health standards.

While OSHA drafted this NPRM to protect employees in every State, section 18(c)(2) of the Act permits State-Plan States and Territories to develop and enforce their own standards for walking-working surfaces and personal fall protection provided these requirements are at least as effective in providing safe and healthful employment and places of employment as the final requirements that result from this proposal.

In summary, this NPRM complies with Executive Order 13132. In States without OSHA-approved State Plans, any standard developed from this proposal would limit State policy options in the same manner as every standard promulgated by OSHA. In States with OSHA-approved State Plans, this rulemaking would not significantly limit State policy options.

IX. State Plan States

Section 18(c)(2) of the Occupational Safety and Health Act of 1970 (29 U.S.C. 667(c)(2)) requires State-Plan States to adopt mandatory standards promulgated by OSHA. Accordingly, the 25 States and 2 Territories with their own OSHA-approved occupational safety and health plans would have to adopt provisions comparable to the provisions in this proposed rule within 6 months after the Agency publishes the final rule that it develops from this proposal. The Agency believes that the proposed rule would provide employers in State-Plan States and Territories with critical information and methods necessary to protect their employees from falls and other hazards associated with walking-working surfaces. The 25 States and 2 Territories with State Plans are: Alaska, Arizona, California, Hawaii, Indiana, Iowa, Kentucky, Maryland, Michigan, Minnesota, Nevada, New Mexico, North Carolina, Oregon, Puerto Rico, South Carolina, Tennessee, Utah, Vermont, Virginia, Washington, and Wyoming. Connecticut, Illinois, New Jersey, New York, and the Virgin Islands have OSHA-approved State Plans that apply to State and local government employees only. Until a State-Plan State/Territory promulgates its own comparable provisions based on the final rule developed from this proposal, Federal OSHA will provide the State/Territory with interim enforcement assistance, as appropriate.

X. Unfunded Mandates Reform Act

OSHA reviewed this proposed rule according to the Unfunded Mandates Reform Act of 1995 ("UMRA"; 2 U.S.C. 1501 *et seq.*) and Executive Order 12875 (58 FR 58093). As discussed above in section V. of this preamble ("Preliminary Economic Analysis and Initial Regulatory Flexibility Screening Analysis"), the Agency estimates that compliance with this proposed rule would require private-sector employers to expend about $159.2 million each year. However, while this proposed rule establishes a federal mandate in the private sector, it is not a significant regulatory action within the meaning of section 202 of the UMRA (2 U.S.C. 1532).

Under voluntary agreement with OSHA, some States enforce compliance with their State standards on public sector entities, and these agreements specify that these State standards must be equivalent to OSHA standards. Thus, although OSHA has included compliance costs for the affected public-sector entities in its analysis of the expected impacts associated with the proposal, the proposal would not involve any unfunded mandates being imposed on any State or local government entity. Consequently, this proposed rule does not meet the definition of a "Federal intergovernmental mandate" (*see* section 421(5) of the UMRA (2 U.S.C. 658(5))). Therefore, for the purposes of the UMRA, the Agency preliminarily certifies that this proposed rule does not mandate that State, local, and tribal governments adopt new, unfunded regulatory obligations.

XI. Public Participation

OSHA invites comments on all aspects of the proposed rule. Throughout this document OSHA has invited comment on specific issues and requested information and data about practices at establishments and industries affected by this proposal. OSHA will carefully review and evaluate these comments, information, and data, as well as all other information in the rulemaking record, to determine how to proceed.

Comments. The Agency invites interested parties to submit written data, views, and arguments concerning this proposal. In particular, the Agency welcomes comments on its determination of the economic or other regulatory impacts of the proposed rule on the regulated community. When submitting comments, follow the procedures specified above in the sections titled **DATES** and **ADDRESSES**. The comments must clearly identify the provision of the proposal being addressed, the position taken with respect to each issue, and the basis for that position. Comments, along with supporting data and references, received by the end of the specified comment period will become part of the proceedings record, and will be available electronically for public inspection at the Federal eRulemaking Portal (*http://www.regulations.gov*), or may be read at the OSHA Docket Office, Room N–2625, 200 Constitution Ave., NW., Washington. (*See* the section of this **Federal Register** notice titled **ADDRESSES** for additional information on how to access these documents.)

Informal Public Hearings. Requests for a hearing should be submitted to the Agency as set forth above under the sections of this notice titled **DATES** and **ADDRESSES**.

List of Subjects in 29 CFR Part 1910

Falls; Fall arrest; Fall protection; Fall restraint; Ladders; Occupational safety and health; Scaffolds; Stair; Walking-working surfaces; Window cleaning.

XII. Authority and Signature

This document was prepared under the authority of David Michaels, Assistant Secretary of Labor for Occupational Safety and Health, U.S. Department of Labor, 200 Constitution Avenue, NW., Washington, DC 20210.

Signed at Washington, DC, on April 29, 2010.

David Michaels,

Assistant Secretary of Labor for Occupational Safety and Health.

Proposed Regulatory Text

Pursuant to sections 4, 6, and 8 of the OSH Act of 1970 (29 U.S.C. 653, 655, 657), Secretary of Labor's Order No. 5–2007 (72 FR 31159), and 29 CFR part 1911, it is hereby amending subparts D and I of 29 CFR part 1910 as set forth below.

PART 1910—OCCUPATIONAL SAFETY AND HEALTH STANDARDS

1. Subpart D is revised to read as follows:

Subpart D—Walking-Working Surfaces

Sec.
1910.21 Scope, application, and definitions.
1910.22 General requirements.
1910.23 Ladders.
1910.24 Step bolts and manhole steps.
1910.25 Stairways.
1910.26 Dockboards (bridge plates).
1910.27 Scaffolds (including rope descent systems).
1910.28 Duty to have fall protection.
1910.29 Fall protection systems criteria and practices.
1910.30 Training requirements.

Authority: Secs. 4, 6, and 8 of the Occupational Safety and Health Act of 1970 (29 U.S.C. 653, 655, 657), Secretary of Labor's Order No. 12–71 (36 FR 8754), 8–76 (41 FR 25059), and 9–83 (48 FR 35736), 1–90 (55 FR 9033), 5–2002 (67 FR 65008), or 5–2007 (72 FR 31159), as applicable. Subpart D is also issued under 29 CFR part 1911.

Subpart D—Walking-Working Surfaces

§ 1910.21 Scope, application and definitions.

(a) *Scope and application.* This subpart applies to all general industry workplaces. It covers all walking-working surfaces unless specifically excluded by individual sections of this subpart.

(b) *Definitions.*

Alternating tread-type stair means a series of steps (treads) usually attached to a center support in an alternating manner so that a user of the stair normally does not have both feet on the same level.

Authorized describes an employee who is approved or assigned by the employer to perform a specific type of duty or an employee who is permitted by the employer to be at a specific location.

Cage means a barrier mounted on the side rail of a fixed ladder or fastened to the structure behind the fixed ladder and which is designed to enclose the climbing space of the ladder to safeguard the employee while climbing the ladder. A cage may also be called a "cage guard" or "basket guard."

Carrier means a track of a ladder safety system consisting of a flexible cable or rigid rail which is secured to the ladder or structure by mountings.

Combination ladder means a portable ladder that can be used as a stepladder, single extension ladder, trestle ladder, or stairwell ladder. Its components may be used as a single ladder.

Designated area means a distinct portion of a walking-working surface delineated by a perimeter warning line in which temporary work may be performed without additional fall protection.

Dockboard (bridge plate) means a portable or fixed device for spanning the gap or compensating for the difference in level between loading platforms and carriers.

Equivalent means alternate designs, materials, or methods that the employer can demonstrate will provide an equal or greater degree of safety for employees compared to the method or item specified in this subpart.

Extension ladder means a non-self-supporting portable ladder adjustable in length.

Failure means a load refusal, breakage, or separation of component parts. Load refusal is the point where the ultimate strength is exceeded.

Fall hazard means any condition on a walking-working surface that exposes an employee to injury from a fall on the same level or to a lower level.

Fall protection means any equipment, device, or system that prevents an employee from experiencing a fall from elevation or that mitigates the effect of such a fall.

Fixed ladder means a ladder, including an individual rung ladder, which is permanently attached to a structure, building, or equipment. It does not include ship stairs or manhole steps.

Grab bars means individual handholds placed adjacent to or as an extension of ladder side rails for the purpose of providing access beyond the limits of the ladder.

Guardrail system means a barrier erected to prevent employees from falling to lower levels.

Handrail means a rail used to provide employees a handhold for support.

Hoist area means any elevated access opening to a walking-working surface where hoisted equipment or materials are loaded or received.

Hole means a gap or void 2 inches (5 cm) or more in its least dimension, in a floor, roof, or other walking-working surface.

Individual rung ladder means a ladder consisting of rungs individually attached to a structure, building, or piece of equipment. It does not include manhole steps.

Ladder means a device with rungs, steps, or cleats typically used to gain access to a different elevation.

Ladder safety system means a device, other than a cage or well, designed to eliminate or reduce the possibility of falls from ladders. A ladder safety system usually consists of a carrier (the track of flexible cable or rigid rail), safety sleeve (moving component which travels on the carrier), lanyard, connectors, and body belt or harness.

Ladder stand (*see* "Mobile ladder stand").

Lower level means an area to which an employee could fall. Such areas include ground levels, floors, roofs, ramps, runways, excavations, pits, tanks, materials, water, equipment, and similar surfaces.

Manhole steps means steps individually attached or set into the walls of a manhole structure.

Maximum intended load (designed working load) means the total load of all employees, equipment, tools, materials, transmitted loads, and other loads reasonably anticipated to be applied to a walking-working surface.

Mobile means manually propelled and/or movable.

Mobile ladder stand (ladder stand) means a mobile, fixed-size, self-supporting ladder consisting of flat treads in the form of steps accessing a top step. The assembly may include handrails and is intended for use by one employee.

Mobile ladder stand platform means a mobile, fixed-height, self-supporting unit having one or more standing levels, provided with means of access or egress to the platform or platforms.

Open riser means the gap between the treads of stairways without upright members (risers).

Opening means a gap or void 30 inches (76 cm) or more high and 18 inches (46 cm) or more wide in any wall or partition through which employees can fall to a lower level.

Platform means a walking-working surface elevated above the surrounding area.

Portable ladder means a ladder that can readily be moved or carried and usually consists of side rails joined at intervals by steps, rungs, cleats, or rear braces.

Qualified describes a person who, by possession of a recognized degree, certificate, or professional standing, or who by extensive knowledge, training, and experience has successfully

demonstrated the ability to solve or resolve problems relating to the subject matter, the work, or the project.

Qualified climber means an employee engaged in outdoor advertising who, by virtue of physical capabilities, training, work experience, and job assignment, is authorized by the employer to climb fixed ladders without using fall protection.

Ramp means an inclined surface between different elevations that is used for the passage of employees, vehicles, or both.

Riser means the upright member of a step situated at the back of a lower tread and near the leading edge of the next higher tread.

Rope descent system means a suspension device that supports one employee in a chair (seat board) and allows the user to descend in a controlled manner and to stop at any time at a desired level of descent. A rope descent system is a variation of the single-point adjustable suspension scaffold. Also known as a controlled descent device, controlled descent equipment, or controlled descent apparatus.

Rung, step, or cleat means, when used on a ladder, a cross-piece on which a person may step to ascend or descend.

Runway means a passageway for persons, elevated above the surrounding floor or ground level, such as a catwalk, a foot walk along shafting, or a walkway between buildings.

Safety factor means the ratio of the design load and the ultimate strength of the material.

Scaffold means any temporary elevated or suspended platform, and its supporting structure, including points of anchorage, used to support employees or materials or both. The term "scaffold" does not include crane or derrick suspended personnel platforms.

Ship stairs (ship ladders) means a stairway that is equipped with treads and stair rails, has a slope between 50 and 70 degrees from the horizontal, and has open risers.

Side-step ladder means a ladder from which an employee getting off at the top must step sideways from the ladder to reach the landing.

Single-point adjustable suspension scaffold means a suspension scaffold consisting of a platform suspended by a single rope from an overhead support and equipped with means to permit the movement of the platform to desired work levels.

Spiral stairway means a stairway having a helical (spiral) structure attached to a supporting pole.

Stair rail or *stair rail system* means a vertical barrier (such as rails, decorative panels, and mesh) erected along open sides of stairways to prevent employees from falling to lower levels. The top surface of a stair rail system may also be a handrail.

Standard stairs means a permanently installed stairway. Ship stairs, spiral stairs, and alternating tread-type stairs are not standard stairs.

Stepladder means a self-supporting portable ladder, non-adjustable in length, with flat steps and a hinged back.

Step-bolt (pole step) means a bolt or rung attached at intervals along a structural member and used for foot placement during climbing or standing.

Stepstool means a self-supporting, foldable, portable ladder, nonadjustable in length, 32 inches (81 cm) or less in overall size, with flat steps and without a pail shelf, designed so that the ladder top cap, as well as all steps, can be climbed on. The side rails may continue above the top cap.

Through ladder means a type of fixed ladder designed to allow a person to get off at the top by stepping through the ladder to reach a landing.

Tieback means an attachment from an anchorage (e.g., structural member) to a supporting device.

Toeboard means a low protective barrier that is designed to prevent the fall of materials and equipment to lower levels and provide protection from falls for employees.

Tread means the horizontal member of a step.

Unprotected sides and edges means any side or edge of a walking-working surface (except at entrances to points of access) where there is no wall or guardrail system at least 39 inches (99 cm) high.

Walking-working surface means any surface horizontal or vertical, on or through which an employee walks, works, or gains access to a workplace location. Walking-working surfaces include, but are not limited to, floors, stairs, steps, roofs, ladders, ramps, runways, aisles, and step bolts.

Well means a permanent, complete enclosure around a fixed ladder. Proper clearances for a well provide the person climbing the ladder the same protection as a cage.

§ 1910.22 General requirements.

(a) *Surface conditions.* (1) All places of employment, passageways, storerooms, and service rooms shall be kept clean and orderly, and in a sanitary condition.

(2) The floor of every workroom shall be maintained in a clean and, so far as possible, a dry condition. Where wet processes are used, drainage shall be maintained and false floors, platforms, mats, or other dry standing places shall be provided where practicable.

(3) Employers must ensure that all surfaces are designed, constructed, and maintained free of recognized hazards that can result in injury or death to employees.

(b) *Application of loads.* Employers must ensure that walking-working surfaces are:

(1) Designed, constructed, and maintained to support their maximum intended load; and

(2) Not loaded beyond their maximum intended load.

(c) *Access and egress.* The employer must ensure employees are provided with and use a safe means of access to and egress from one walking-working surface to another.

(d) *Maintenance and repair.* (1) The employer must ensure through regular and periodic inspection and maintenance that walking-working surfaces are in a safe condition for employee use.

(2) The employer must ensure that all hazardous conditions are promptly corrected or repaired. If the repair can not be made immediately, the hazard must be guarded to prevent employee use.

(3) Where hazardous conditions may affect the structural integrity of the walking-working surface, a qualified person must perform or supervise the maintenance or repair of that surface.

§ 1910.23 Ladders.

(a) *Application.* This section covers all ladders, except those used only for firefighting or rescue operations and ladders that are designed into (an integral part of) a machine or piece of equipment.

(b) *General requirements for all ladders.* (1) Ladder rungs and steps must be parallel, level, and uniformly spaced when the ladder is in position for use.

(2) Rungs, cleats, and steps of ladders must be spaced not less than 10 inches (25 cm) nor more than 14 inches (36 cm) apart, as measured between the center lines of the rungs, cleats, and steps, except that:

(i) Rungs and steps on ladders in elevator shafts must be spaced no less than 6 inches (15 cm) apart, nor more than 16.5 inches (42 cm) apart, as measured along the ladder side rails; and

(ii) Rungs and steps on fixed ladders on telecommunication towers must be installed no more than 18 inches (46 cm) apart.

(3) Rungs, cleats, and steps of stepstools must be not less than 8 inches

(20 cm) apart, nor more than 12 inches (30 cm) apart, as measured between the center lines of the rungs, cleats, and steps.

(4) Except as provided below, ladder rungs and steps must have a minimum clear width of 11.5 inches (29 cm) for portable ladders and 16 inches (41 cm) for individual rung and fixed ladders.

(i) Narrow rungs that are not designed to be stepped on, such as those located on the tapered end of fruit pickers' ladders and similar ladders, are exempt from the minimum rung width requirement.

(ii) Manhole entry ladders that are supported by manhole openings must have rungs or steps that have a clear width of at least 9 inches (23 cm).

(iii) Rolling ladders used in telecommunication centers must have a clear width of at least 8 inches (20 cm).

Note to paragraph (b)(4) of this section: When ladder safety systems meeting the requirements of § 1910.29 are used on fixed or individual-rung ladders, the clear width is measured before the installation of the ladder safety system.

(5) Wooden ladders must not be coated or covered with any material that may obscure structural defects.

(6) Metal ladders must be protected against corrosion.

(7) Ladder surfaces must be free of puncture or laceration hazards.

(8) Ladders must be used only for the purposes for which they were designed.

(9) Ladders must be inspected before use to identify any visible defects that could cause employee injury.

(10) Ladders with structural or other defects must immediately be tagged "Do Not Use" or with similar language in accordance with § 1910.145 and must be removed from service until repaired in accordance with § 1910.22(d), or replaced.

(11) Employers shall ensure that, when ascending or descending a ladder, employees face the ladder.

(12) Employers shall ensure that employees use at least one hand to grasp the ladder when progressing up and down the ladder.

(13) Employers shall ensure that employees do not carry any object or load that could cause employees to lose balance and fall.

(c) *Portable ladders.* (1) Rungs and steps of portable metal ladders must be corrugated, knurled, dimpled, coated with skid-resistant material, or otherwise treated to minimize the possibility of slipping.

(2) Each stepladder or any combination ladder that is used in a stepladder mode must be designed with a metal spreader or locking device to hold the front and back sections securely in an open position while in use.

(3) Ladders must not be loaded beyond the maximum intended load for which they were designed and tested, or beyond the manufacturer's rated capacity. The maximum intended load, as defined in § 1910.21(b), includes the worker and all tools and supplies carried.

(4) Ladders must be used only on stable and level surfaces unless secured or stabilized to prevent accidental displacement.

(5) The use of portable single rail ladders is prohibited.

(6) Ladders must not be moved, shifted, or extended while occupied by an employee.

(7) Ladders placed in any location where they can be displaced by other activities or by traffic, such as ladders used in passageways, doorways, or driveways, must be secured to prevent accidental displacement unless a temporary barricade, such as a row of traffic cones, is used to keep the activities or traffic away from the ladder.

(8) The top of a stepladder must not be used as a step.

(9) A non-self-supporting ladder must not be used on slippery surfaces unless it is secured and stabilized.

(10) The top of a non-self-supporting ladder must be placed with the two rails supported unless it is equipped with a single support attachment.

(11) When portable ladders are used to gain access to an upper landing surface, the ladder siderails must extend at least 3 feet (0.9 m) above that upper landing surface. (*See* Figure D–1.)

(12) When work is performed on or near electrical circuits, the requirements of § 1910.333(c) apply.

(13) Ladders and ladder sections must not be tied or fastened together to provide longer length unless they are specifically designed for such use.

(14) The reach of ladders and ladder sections must not be increased by any means unless the equipment is specifically designed for the application.

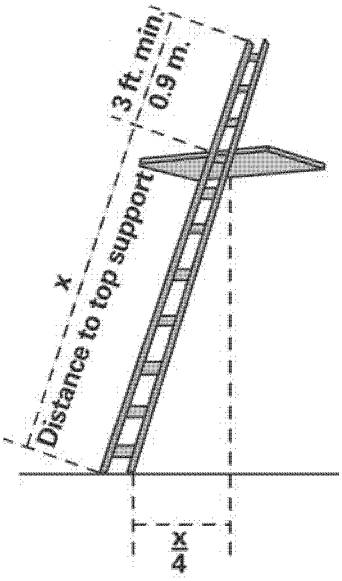

Figure D-1 -- Portable Ladder Set-up

(d) *Fixed ladders.* (1) Fixed ladders must be capable of supporting their maximum intended load.

(2) Fixed ladders installed on or after (*date 90 days after the effective date of the final rule*) must be designed, constructed, and maintained as follows:

(i) Fixed ladders must be capable of supporting two live loads of at least 250 pounds (113 kg) each, concentrated between any two consecutive attachments, plus anticipated loads caused by ice buildup, winds, rigging, and impact loads resulting from the use of ladder safety systems. The number and position of additional concentrated live loads of 250 pounds (113 kg) each, determined from anticipated usage of the ladder, must also be included in determining the capabilities of fixed ladders.

(ii) Each step or rung must be capable of supporting at least a single concentrated load of 250 pounds (113 kg) applied in the middle of the step or rung.

(3) The minimum perpendicular clearance from the centerline of the steps and rungs, or grab bars, or both, to the nearest permanent object in back of the ladder must be 7 inches (18 cm), except in the case of an elevator pit ladder, for which a minimum perpendicular clearance of 4.5 inches (11 cm) is required. Grab bars must not protrude on the climbing side beyond the rungs of the ladder which they serve.

(4) The side rails of through or side-step ladders must extend 42 inches (1.1 m) above the top of the access level or landing platform served by the ladder. For a parapet ladder, the access level must be the roof if the parapet is cut to permit passage through the parapet; if the parapet is continuous, the access level must be the top of the parapet.

(5) For through ladder extensions, the steps or rungs must be omitted from the extension and the extension of the side rails must be flared to provide not less than 24 inches (61 cm) nor more than 30 inches (76 cm) clearance between side rails. Where ladder safety systems are provided, the maximum clearance between side rails of the extensions must not exceed 36 inches (91 cm).

(6) For side-step ladders, the side rails and the steps or rungs must be continuous in the extension. (*See* Figure D–2.)

(7) Grab bars must extend 42 inches (1.1 m) above the access and egress levels or landing platforms served by the ladder.

(8) The minimum size (cross-section) of the grab bars must be the same as the rungs of the ladder.

(9) Where a fixed ladder terminates at a hatch (*see* Figure D–3), the hatch cover must:

(i) Open with sufficient clearance for the employee to permit easy access to or egress from the ladder; and

(ii) Open at least 70 degrees from the horizontal, if counterbalanced.

(10) Fixed individual rung ladders must be constructed to prevent the employee's feet from sliding off the end. (*See* Figure D–4.)

(11) The use of fixed ladders having a pitch greater than 90 degrees from the horizontal is prohibited.

(12) The step-across distance from the centerline of the steps or rungs of a fixed ladder must:

(i) Not be less than 7 inches (18 cm) nor more than 12 inches (30 cm) to the nearest edge of the structure, building, or equipment accessed from through ladders.

(ii) Not be less than 15 inches (38 cm) nor more than 20 inches (51 cm) to the access and egress points of the platform edge for side-step ladders.

(13) Fixed ladders without cages or wells must have:

(i) A clear width of at least 15 inches (38 cm) to the nearest permanent object on each side of the centerline of the ladder. (*See* Figure D–2.)

(ii) A minimum perpendicular distance of 30 inches (76 cm) from the center line of the steps and rungs to the nearest object on the climbing side except when unavoidable obstructions are encountered, then the minimum clearance may be reduced to 24 inches (61 cm) provided deflector plates are installed. (*See* Figure D–5.)

Note to paragraph (d) of this section: The duty to provide fall protection for employees working on fixed ladders is found at § 1910.28 and the criteria for such fall protection systems is found at § 1910.29.

BILLING CODE 4510–29–P

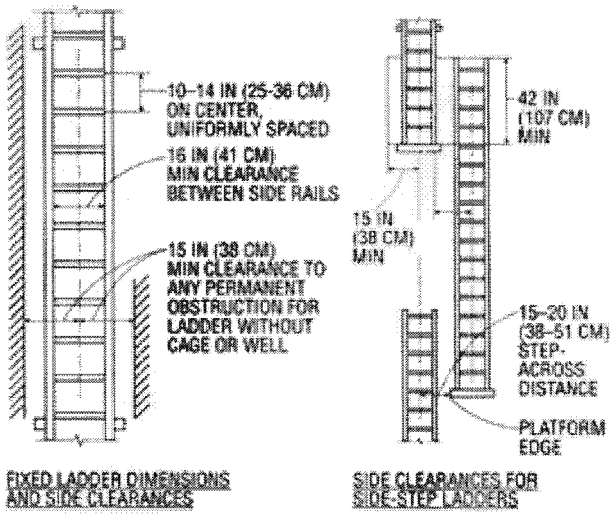

Figure D-2 -- Side-Step Fixed Ladder Sections

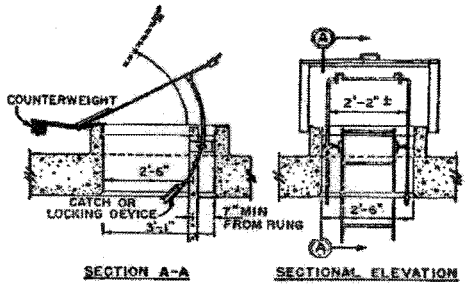

Figure D-3 -- Counterbalanced Hatch Cover at Roof

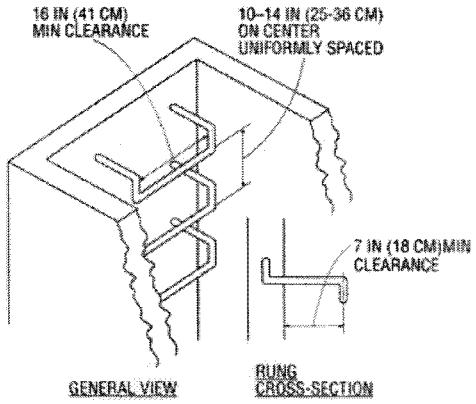

Figure D-4 -- Individual Rung Ladder

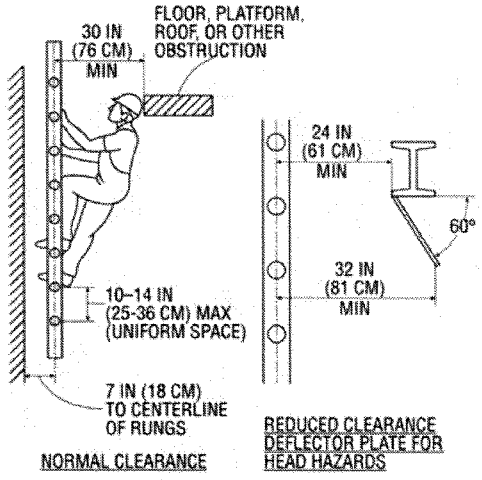

Figure D-5 -- Fixed Ladder Clearances

BILLING CODE 4510–29–C

(e) *Mobile ladder stands and mobile ladder stand platforms (Mobile ladder stands and platforms)*—(1) *General design requirements.* (i) Mobile ladder stands and platforms must have a step width of at least 16 inches (41 cm).

(ii) The steps, standing levels, and platforms of mobile ladder stands and platforms must be provided with a slip resistant surface. This surface may be an integral part of the surface or be provided by a secondary process or operation, e.g., dimpling, knurling, shotblasting, coating, metal spraying, or slip resistant tapes that must be durable in nature.

(iii) Wheels or casters, when under load, must be designed to support their proportional share of four times the rated load, plus the proportional share of the unit's weight.

(iv) Mobile ladder stands and platforms that use wheels or casters, rigid and swivel, must be equipped with a system to impede horizontal movement.

(v) The maximum work surface heights of mobile ladder stands and platforms must not exceed four times the least base dimension without additional support. When greater heights are needed, outriggers, counterweights, or comparable means must be used to maintain this minimum base ratio.

(vi) Mobile ladder stands and platforms must be capable of supporting at least four times their intended load.

(vii) Occupied mobile ladder stands and platforms must not be moved.

(2) *Design requirements for mobile ladder stands.* (i) Steps must be uniformly spaced and arranged with a rise of not more than 10 inches (25 cm), and a depth of not less than 7 inches (18 cm). The slope of the step stringer (inclined side support) to which the steps are attached must not be more than 60 degrees measured from the horizontal.

(ii) All ladder stands with a top step height of 4 to 10 feet (1.2 m to 3 m) must be provided with handrails having a vertical height of 29.5 inches (75 cm) to 37 inches (94 cm) measured from the front edge of a step. The use of removable gates or non-rigid members such as chains may be permitted for special use applications.

(iii) All ladder stands with a top step over 10 feet high (3 m) must have the top step protected on three sides by a handrail with a vertical height of at least 36 inches (91 cm). The use of removable gates or non-rigid members such as chains may be permitted for special use applications. Top steps that are 20 inches (51 cm) or more, front to back, must be provided with a midrail and toeboard.

(iv) The standing areas of mobile ladder stands must be within the base frame.

(3) *Design requirements for mobile ladder stand platforms.* (i) Steps of a ladder stand platform must conform to paragraph (e)(2)(i) of this section. However, when the employer demonstrates that compliance with paragraph (e)(3)(i) is not practicable, steeper slopes or vertical rung ladders may be used, provided the units are stabilized to prevent overturning.

(ii) All ladder stand platforms with a platform height of 4 to 10 feet (1.2 m to 3 m) must be provided with handrails having a vertical height of 29.5 inches (75 cm) to 37 inches (94 cm) measured from the front edge of a step. Handrails in the platform area above the flat surface must have a vertical height of at least 36 inches (91 cm) and include a midrail. The use of removable gates or non-rigid members such as chains may be permitted for special use applications.

(iii) All ladder stand platforms with a platform height of over 10 feet (3 m) high must have guardrails and toeboards meeting the requirements of § 1910.29 on the exposed sides and ends of the platform. The use of removable gates or non-rigid members such as chains may be permitted for special use applications.

§ 1910.24 Step bolts and manhole steps.

(a) *Step bolts.* (1) All step bolts installed on or after (date 90 days after the effective date of the final rule) that are used in corrosive environments must be constructed of, or coated with, a material that will retard corrosion of the step bolt.

(2) Step bolts must be designed to prevent the employee's foot from slipping or sliding off the end of the step bolt.

(3) Step bolts must be spaced uniformly, 12 inches (30 cm) minimum center to center, alternately spaced, 18 inches (46 cm) maximum. (*See* Figure D–6.) The spacing from the entry and exit surface to the first step bolt may be different from the spacing between the other step bolts.

(4) The minimum clear width of each step bolt must be 4.5 inches (11 cm).

(5) The minimum perpendicular distance between the centerline of the step bolt to the nearest permanent object in back of the bolt must be at least 7 inches (18 cm). Where obstructions cannot be avoided, toe clearances may be reduced to 4.5 inches (11 cm).

(6) Step bolts installed before (date 90 days after the effective date of the final

rule) must be capable of supporting their maximum intended load.

(7) Each step bolt installed on or after (date 90 days after the effective date of the final rule) must be capable of supporting, without failure, at least four times its maximum intended load.

(8) Step bolts must be visually inspected before each use and be maintained in accordance with § 1910.22.

(9) Step bolts that are bent more than 15 degrees from the perpendicular (regardless of direction) must be removed and replaced with bolts that meet the requirements of this section.

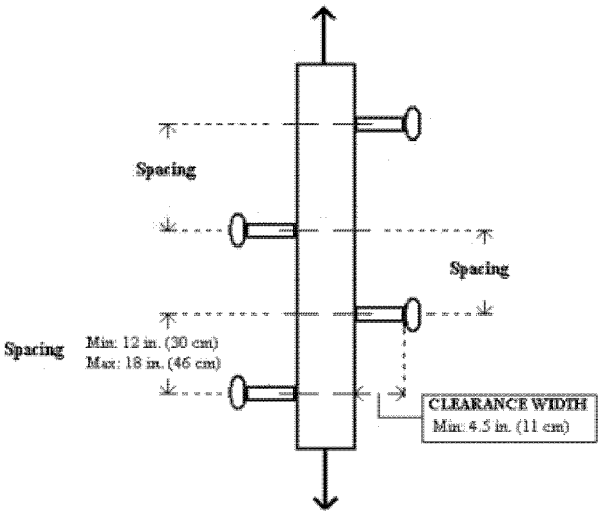

Figure D-6 – Step Bolt Spacing

(b) *Manhole steps.* (1) Manhole steps installed before (date 90 days after the effective date of the final rule) must be capable of supporting their maximum intended load.

(2) The employer must ensure that manhole steps installed on or after (date 90 days after the effective date of the final rule):

(i) Are provided with slip-resistant surfaces such as, corrugated, knurled, or dimpled surfaces;

(ii) Are constructed of, or coated with, a material that will retard corrosion of the step if used in corrosive environments;

(iii) Have a minimum clear step width of 10 inches (25 cm);

(iv) Are spaced uniformly, not more than 16 inches (41 cm) apart;

Exception to paragraph (b)(2)(iv) of this section: The spacing from the entry and exit surface to the first manhole step may be different from the spacing between the other steps.

(v) Have a minimum perpendicular distance between the centerline of the manhole step to the nearest permanent object in back of the step of at least 4.5 inches (11 cm); and

(vi) Are designed to prevent the employee's foot from slipping or sliding off the end of the manhole step.

(3) Manhole steps must be visually inspected before each use and be maintained in accordance with § 1910.22.

§ 1910.25 Stairways.

(a) *General requirements.* (1) This section covers all stairs including standard stairs, spiral stairs, ship stairs, and alternating tread-type stairs. This section does not cover: Stairs serving floating roof tanks; stairs on scaffolds; stairs designed into a machine or piece of equipment; or stairs on self-propelled motorized mobile equipment.

(2) Handrails and stair rail systems must be provided as required in § 1910.28.

Note to paragraph (a)(2) of this section: The top rail of a stair rail system may also serve as a handrail when installed in accordance with § 1910.29(f).

(3) Except as required in paragraph (c)(3) of this section, vertical clearance above any stair tread to an overhead obstruction must be at least 6 feet, 8 inches (2.1 m) measured from the leading edge of the tread.

(4) Stairs must be installed with uniform riser heights and tread depths between landings.

(5) Stairway landings and platforms must be no less than the width of the stair and not less than 30 inches (76 cm) in length as measured in the direction of travel.

(6) When a door or a gate opens directly on a stairway, a platform must be provided, and the swing of the door or gate must not reduce the effective usable depth to less than 20 inches (51 cm) for platforms installed before (date 90 days after the effective date of the final rule) and 22 inches (56 cm) for platforms installed on or after (date 90 days after the effective date of the final rule). (*See* Figure D–7.)

(7) Stairs must be designed and constructed to carry five times the normal anticipated live load, but never less than a concentrated load of 1,000 pounds (454 kg) applied at any point.

(8) Standard stairs must be provided for access from one walking-working surface to another where operations necessitate regular and routine travel between levels and for access to operating platforms for equipment. However, winding stairways may be installed on tanks and similar round structures when the diameter of the structure is five (5) feet (1.5 m) or more.

(9) Spiral stairs, ship stairs, or alternating tread-type stairs are not permitted except for special limited usage and secondary access situations when the employer can demonstrate it is not practical to provide a standard stairway.

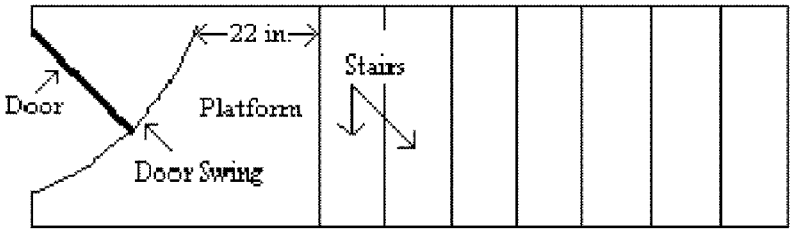

Figure D-7 - Door or Gate Opening on Stairway

(b) *Standard stairs.* In addition to paragraph (a) of this section, standard stairs must:

(1) Be installed at angles between 30 and 50 degrees from the horizontal;

(2) Have a maximum riser height of 9.5 inches (24 cm);

(3) Have a minimum tread depth of 9.5 inches (24 cm), except when open risers are used; and

(4) Have a minimum width of 22 inches (56 cm) between vertical barriers.

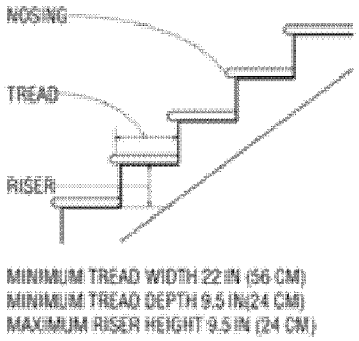

Figure D-8 -- Dimensions of Standard Stairs

(c) *Spiral stairways.* In addition to paragraph (a) of this section, spiral stairways must have:

(1) A clear width not less than 26 inches (66 cm);

(2) Risers with a maximum height of 9.5 inches (24 cm);

(3) A minimum headroom above the spiral stairway of 6 feet, 6 inches (2 m) measured vertically from the center of the leading edge of the tread;

(4) Treads with a minimum depth of 7.5 inches (19 cm) at a point 12 inches (30 cm) from the narrowest edge; and

(5) Uniform size treads.

(d) *Ship stairs.* In addition to paragraph (a) of this section, ship stairs must:

(1) Be installed at a slope of 50 to 70 degrees from the horizontal;

(2) Have open risers; and

(3) Have treads with a minimum depth of 4 inches (10 cm), a minimum width of 18 inches (46 cm), and a vertical rise between tread surfaces in the range of 6.5 to 12 inches (17 to 30 cm).

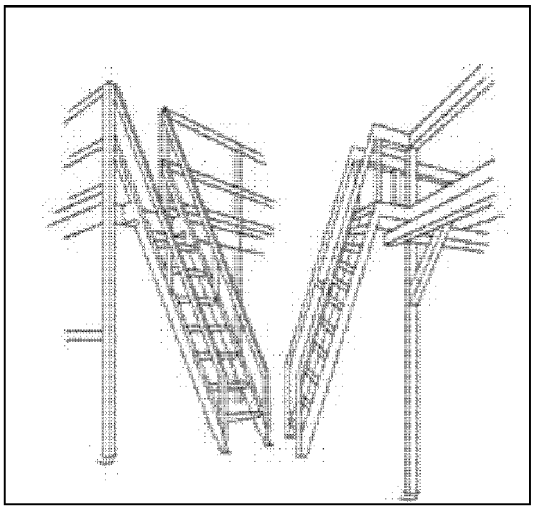

Figure D-9 -- Ship Stairs

(e) *Alternating tread-type stairs.* In addition to paragraph (a) of this section, alternating tread-type stairs must have:

(1) A series of steps installed at a slope between 50 and 70 degrees from the horizontal;

(2) A distance of 20 to 24 inches (51 to 61 cm) between the handrails;

(3) Treads with a minimum depth of 8.5 inches (22 cm);

(4) Open risers if the depth is less than 9.5 (24 cm) inches; and

(5) Treads that are a minimum of 7 inches (18 cm) wide at the nosing (i.e., leading edge of a tread).

§ 1910.26 Dockboards (bridge plates).

(a) Portable and powered dockboards must be capable of supporting their maximum intended load.

(b) Dockboards put into service on or after (date 90 days after the effective date of the final rule) must be designed, constructed, and maintained to prevent equipment from running off the edge.

(c) Portable dockboards must be secured in position by anchoring or equipping them with devices which will prevent their slipping. Where this is infeasible, the employer must ensure there is substantial contact between the portable dockboard and the unattached surface or surfaces.

(d) Vehicles onto which a dockboard has been placed must be prevented from moving (*e.g.,* using wheel chocks or sand shoes) while the dockboard is being used by employees.

(e) Portable dockboards must be equipped with handholds or other means to permit safe handling.

§ 1910.27 Scaffolds (including rope descent systems).

(a) *Scaffolds.* Scaffolds, other than rope descent systems, used in general industry must meet the requirements for scaffolds in part 1926 (Safety and Health Regulations for Construction) of this chapter.

(b) *Rope descent systems.* (1) The use of a rope descent system is prohibited for heights greater than 300 feet (91 m) above grade unless the employer can demonstrate that access cannot otherwise be attained safely and practicably.

(2) When rope descent systems are used, employers must:

(i) Use equipment in accordance with the instructions, warnings, and design limitations set by manufacturers and distributors.

(ii) Train employees in accordance with § 1910.30;

(iii) Inspect all equipment used in rope descent systems each day before use and remove damaged equipment from service;

(iv) Use proper rigging, including sound anchorages and tiebacks, with particular emphasis on providing tiebacks when counterweights, cornice hooks, or similar non-permanent anchorages are used;

(v) Use a separate, independent personal fall arrest system meeting the requirements of subpart I of this part;

(vi) Ensure that all lines are capable of sustaining a minimum tensile load of 5,000 pounds (2,268 kg);

(vii) Provide for prompt rescue of employees in the event of a fall;

(viii) Ensure ropes are effectively padded where they contact edges of the building, anchorage, obstructions, or other surfaces which might cut or weaken the rope;

(ix) Provide for stabilization at the specific work location when descents are greater than 130 feet (39.6 m);

(x) Secure equipment, such as tools, squeegees, or buckets by a tool lanyard or similar method to prevent equipment from falling; and,

(xi) Protect suspension ropes from exposure to open flames, hot work, corrosive chemicals, or other destructive conditions.

§ 1910.28 Duty to have fall protection.

(a) *General.* (1) This section sets requirements for employers to provide fall protection. All fall protection required by this section must conform to the criteria set forth in § 1910.29, except that personal fall protection systems (for example, personal fall arrest systems, restraint systems, and positioning device systems) must conform to the criteria set forth in subpart I of this part. This section does not apply to: Fall hazards presented by the exposed perimeters of entertainment stages or rail station platforms. Additionally, this section does not apply to powered platforms covered by § 1910.66(j), aerial lifts covered by § 1910.67(c)(2)(v), the portion of telecommunications work covered by § 1910.268(n)(7) and (n)(8), or the portion of electric power generation, transmission, and distribution work covered by § 1910.269(g)(2)(v).

(2) The employer must ensure that the walking-working surfaces used by its employees have the strength and structural integrity to support them safely, before allowing employees to work on those surfaces.

(b) *Protection from fall hazards*—(1) *Unprotected sides and edges.* The employer shall ensure that each employee on a walking-working surface (horizontal and vertical) with an unprotected side or edge which is 4 feet (1.2 m) or more above a lower level is protected from falling by the use of one or more of the following:

(i) Guardrail systems meeting the requirements of § 1910.29 of this subpart;

(ii) Designated area meeting the requirements of § 1910.29 of this subpart;

(iii) Safety net systems meeting the requirements part 1926 of this chapter;

(iv) Travel restraint systems meeting the requirements of subpart I of this part; or,

(v) Personal fall arrest systems meeting the requirements of subpart I of this part.

(vi) When the employer demonstrates that use of guardrails on the "working side" of platforms used in slaughtering facilities, or at loading racks, loading docks, or teeming platforms, is infeasible, the work may be done without guardrails provided:

(A) The work operation for which guardrails are infeasible is in process;

(B) Access to the platform is limited to authorized employees; and,

(C) The authorized employees have been trained in accordance with § 1910.30.

(2) *Hoist areas.* (i) Each employee in a hoist area must be protected from falling 4 feet (1.2 m) or more to lower levels by a guardrail system meeting the requirements of § 1910.29 of this subpart; or a personal fall arrest system or a travel restraint system meeting the requirements of subpart I of this part.

(ii) If guardrail systems, chains, gates, or portions thereof, are removed to facilitate the hoisting operation (*e.g.,* during landing of materials), and an employee must lean through the access opening or out over the edge of the access opening (for example, to receive or guide equipment and materials), that employee must be protected from fall hazards by a personal fall arrest system meeting the requirements of subpart I of this part. In addition, a grab handle must be provided on each side of the opening.

(3) *Holes.* (i) Each employee on walking-working surfaces must be protected from falling through holes (including skylights) more than 4 feet (1.2 m) above lower levels by:

(A) Covers meeting the requirements of § 1910.29 of this subpart;

(B) A guardrail system meeting the requirements of § 1910.29 of this subpart;

(C) A travel restraint system meeting the requirements of subpart I of this part; or,

(D) A personal fall arrest system meeting the requirements of subpart I of this part.

(ii) Each employee on a walking-working surface must be protected from tripping in or stepping into or through holes by covers meeting the requirements of § 1910.29 of this subpart.

(iii) Each employee on a walking-working surface must be protected from objects falling through overhead holes by covers meeting the requirements of § 1910.29 of this subpart.

(4) *Dockboards (bridge plates).* (i) Each employee on a dockboard must be protected from falling 4 feet (1.2 m) or more to lower levels by a guardrail or handrail system, except as provided by (b)(4)(ii) of this section.

(ii) Fall protection (guardrail or handrail systems) is not required when:

(A) Dockboards are being used solely for materials handling operations with motorized equipment;

(B) Employees engaged in those operations are exposed to fall hazards of 10 feet (3 m) or less; and

(C) Those employees have been trained, in accordance with § 1910.30, to recognize and avoid the hazards associated with this work. Training must include instruction in the proper placement and securing of dockboards, securing of vehicles, and the proper use of materials handling equipment.

(5) *Runways and similar walkways.* (i) Each employee on a runway or similar walkway must be protected from falling 4 feet (1.2 m) or more to lower levels by a guardrail system. Wherever tools, machine parts or objects are likely to be used on the runway, a toeboard must also be provided along each exposed side.

(ii) Runways used exclusively for special purposes may have the railing on one side omitted when the employer demonstrates that operating conditions necessitate such an omission, provided the employer minimizes the fall hazard by providing a runway that is at least 18 inches (46 cm) wide, and providing employees with, and ensuring the proper use of, personal fall arrest systems or travel restraint systems meeting the requirements of subpart I of this part.

(6) *Dangerous equipment.* (i) Each employee less than 4 feet (1.2 m) above dangerous equipment must be protected from falling into or onto the dangerous equipment by a guardrail or a travel restraint system unless the equipment is covered or guarded to eliminate the hazard.

(ii) Each employee 4 feet (1.2 m) or more above dangerous equipment must be protected from fall hazards by:

(A) A guardrail system meeting the requirements of § 1910.29 of this subpart;

(B) A safety net system meeting the requirements part 1926 of this chapter;

(C) A travel restraint system meeting the requirements of subpart I of this part; or

(D) A personal fall arrest system meeting the requirements of subpart I of this part.

(7) *Wall openings.* Each employee working on, at, above, or near wall openings (including those with chutes attached) where the outside bottom edge of the wall opening is 4 feet (1.2 m) or more above lower levels and the inside bottom edge of the wall opening is less than 39 inches (99 cm) above the walking-working surface, must be protected from falling by the use of:

(i) A guardrail system meeting the requirements of § 1910.29 of this subpart;

(ii) A designated area meeting the requirements of § 1910.29 of this subpart;

(iii) A safety net system meeting the requirements of part 1926 of this chapter;

(iv) A travel restraint system meeting the requirements of subpart I of this part; or,

(v) A personal fall arrest systems meeting the requirements of subpart I of this part.

(8) *Repair, service, and assembly pits (pits) less than 10 feet in depth.* Repair, service, and assembly pits less than 10 feet (3 m) deep need not be protected by a fall protection system provided that the following requirements are met:

(i) Access to any area within 6 feet (1.8 m) of the edge of the pit is limited to trained, authorized employees;

(ii) Floor markings in colors contrasting to that of the surrounding area are applied, or rope, wire, or chain with support stanchions meeting the requirements of § 1910.29(d), or a combination of these are placed at a distance of at least 6 feet (1.8 m) from the edge of the pit; and,

(iii) Caution signs stating, "Caution—Open Floor," or a similar legend, are posted so that they are readily visible to employees entering the pit area.

Note to paragraph (b)(8)(iii) of this section: Caution signs must meet the requirements of § 1910.145.

(9) *Fixed ladders.* The following requirements apply to all fixed ladders except those used in outdoor advertising. Requirements for fixed ladders used in outdoor advertising are found in § 1910.28(b)(10).

(i) Fixed ladders must be provided with cages, wells, ladder safety systems, or personal fall protection systems when the length of the climb is less than 24 feet (7.3 m), but the top of the ladder is at a distance greater than 24 feet (7.3 m) above lower levels.

(ii) Where the total length of a climb equals or exceeds 24 feet (7.3 m), fixed ladders must be equipped with one of the following:

(A) Ladder safety system meeting the requirements of § 1910.29 of this subpart;

(B) Personal fall protection system meeting the requirements of subpart I of this part, and rest platforms at intervals not to exceed 150 ft (45.7 m); or

(C) A cage or well, and multiple ladder sections, with each ladder section not to exceed 50 feet (15.2 m) in length. Ladder sections must be offset from adjacent sections, and landing platforms must be provided at maximum intervals of 50 feet (15.2 m).

Note to paragraph (b)(9) of this section: Total length of climb is the total vertical distance that an employee could climb when traveling between the start of a climb to the finished height of the climb. This total distance includes all ladder segments of a climb, as well as any vertical distance in between ladder segments.

(10) *Outdoor advertising (billboards).* The employer must ensure that: (i) For climbs on the fixed ladder of up to 50 feet (15.2 m), or heights of up to 65 feet (19.8 m) from grade, each employee who climbs a combination of a portable and a fixed ladder wears a body belt or body harness equipped with an appropriate 18 inch (46 cm) rest lanyard as a means to tie off to the fixed ladder as required by subpart I of this part.

(ii) Each employee who climbs a combination of a portable and a fixed ladder where the length of the fixed ladder climb exceeds 50 feet (15.2 m), or where the ladder ascends to heights exceeding 65 feet (19.8 m) from grade is protected through the installation of an appropriate ladder safety system for the entire length of the fixed ladder climb.

(iii) Each employee who climbs fixed ladders equipped with ladder safety systems uses the systems properly, and follows appropriate procedures for inspection and maintenance of the systems.

(iv) All ladder safety systems installed on fixed ladders are properly maintained and used.

(v) Each employee who routinely climbs fixed ladders undergoes training and demonstrates the physical capability to perform the necessary climbs safely. Each employee must satisfy the criteria for qualified climber found in § 1910.29(h).

(vi) Each employee keeps both hands free of tools or material when ascending or descending a ladder.

(vii) Each employee is protected by an appropriate fall protection system upon reaching his or her work position.

(11) *Stairways.* (i) Each employee exposed to a fall of 4 feet (1.2 m) or more to lower levels from an unprotected side or edge of a stairway landing must be protected by a guardrail or stair rail system.

(ii) Every flight of stairs having 3 treads and 4 or more risers must be equipped with stair railing systems and hand rails as follows:

Stair width	Enclosed	One open side	Two open sides	With earth built up on both sides
Less than 44 inches (1.1 m).	At least one handrail.	One stair rail system with handrail on open side.	One stair rail system with handrail on each open side.	
44 inches (1.1 m) through 88 inches (2.2 m).	One handrail on each enclosed side.	One stair rail system with handrail on open side.	One stair rail system with handrail on each open side.	
Greater than 88 inches (2.2 m).	One handrail on each enclosed side and one intermediate handrail located in the middle of the stair.	One stair rail system with handrail on open side and one intermediate handrail located in the middle of the stair.	One stair rail system with handrail on each open side and one intermediate handrail located in the middle of the stair.	
Exterior stairs less than 44 inches (1.1 m).	.....	.....	.....	One handrail on at least one side.

Note to table: The width of the stair must be clear of all obstructions except handrails.

(iii) Notwithstanding the table above, where ship stairs or alternating tread type stairs are installed, they must be equipped with handrails on both sides.

(12) *Scaffolds (inlcuding rope descent systems).* (i) Each employee on a scaffold must be protected from falls in accordance with part 1926 of this chapter.

(ii) Each employee using a rope descent system must be protected from falling 4 feet (1.2 m) or more to lower levels by a personal fall arrest system meeting the requirements of subpart I of this part.

(13) *Walking-working surfaces not otherwise addressed.* Except as provided in this section or by fall protection provisions of other subparts of part 1910, each employee on a walking-working surface 4 feet (1.2 m) or more above lower levels must be protected from falling by:

(i) A guardrail system meeting the requirements of § 1910.29 of this subpart;

(ii) A designated area meeting the requirements of § 1910.29 of this subpart;

(iii) A safety net system meeting the requirements of part 1926 of this chapter;

(iv) A travel restraint system meeting the requirements of subpart I of this part; or,

(v) A personal fall arrest system meeting the requirements of subpart I of this part.

(14) *Protection for floor holes.* (i) Every stairway floor hole shall be guarded by a guardrail system constructed in accordance with paragraph § 1910.29(b) of this subpart. The guardrail system shall be provided on all exposed sides (except at the entrance to the stairway). For infrequently used stairways where traffic across the opening prevents the use of a fixed guardrail system (as when located in aisle spaces), employers have the option of using a guard that consists of a hinged floor-opening cover of standard strength and construction, and a removable guardrail system on all exposed sides (except at the entrance to stairway).

Note to paragraph § 1910.28(b)(14)(i): For the purpose of this provision, the term "infrequently" means use of the stairway on less than a daily basis.

(ii) Every ladderway floor hole or platform shall be guarded by a guardrail system with toeboards on all exposed sides (except at entrance to the hole), with the passage through the guardrail system provided by a swinging gate or offset such that an employee cannot walk directly into the ladderway floor hole.

(iii) Every hatchway and chute-floor hole shall be guarded by one of the following:

(A) A hinged floor-hole cover of standard strength and construction equipped with a guardrail system permanently attached so as to leave only one exposed side. When the hole is not in use, the cover shall be closed or the exposed side shall be guarded by a removable guardrail system with top and mid rails;

(B) A removable guardrail system with toeboard on not more than two sides of the hole and fixed guardrail system with toeboards on all other exposed sides. The removable guardrail system shall remain in place when the hole is not in use; or

(C) When operating conditions require feeding material through a hatchway or chute hole, each employee shall be protected from falling through the hole by a guardrail system or a travel-restraint system.

(c) *Protection from falling objects.* When an employee is exposed to falling objects, the employer must ensure that each employee wear head protection meeting the requirements of subpart I of this part, and must implement one or more of the following measures:

(1) Erect toeboards, screens, or guardrail systems to prevent objects from falling from higher levels;

(2) Erect a canopy structure and keep potential falling objects far enough from the edge of the higher level so that those objects would not go over the edge if they were accidentally displaced; or

(3) Barricade the area to which objects could fall, prohibit employees from entering the barricaded area, and keep objects far enough from the edge so those objects do not go over the edge.

§ 1910.29 Fall protection systems criteria and practices.

(a) *General.* (1) Fall protection systems required by this part must comply with the applicable provisions of this section except that *personal* fall protection systems, including all body belts and body harnesses, must meet the applicable requirements of subpart I of this part.

(2) Employers must provide and install all fall protection systems required by this subpart and must comply with all other pertinent requirements (including training) of this subpart before any employee begins work that necessitates fall protection.

(b) *Guardrail systems.* Except as provided in paragraph (b)(16) of this section, guardrail systems, and their use must comply with the following provisions:

(1) Top edge height of top rails, or equivalent guardrail system members, must be 42 inches (107 cm) plus or minus 3 inches (8 cm) above the walking-working level. When conditions warrant, the height of the top edge may exceed the 45-inch (114 cm) height, provided the guardrail system meets all other criteria of paragraph (b) of this section.

(2) Midrails, screens, mesh, intermediate vertical members, or equivalent intermediate structural members must be installed between the top edge of the guardrail system and the walking-working surface when there is no wall or parapet wall at least 21 inches (53 cm) high.

(i) Midrails, when used, must be installed at a height midway between the top edge of the guardrail system and the walking-working level.

(ii) Screens and mesh, when used, must extend from the top rail to the walking-working level and along the entire opening between top rail supports.

(iii) Intermediate members (such as balusters), when used between posts, must be not more than 19 inches (48 cm) apart.

(iv) Other structural members (such as additional midrails and architectural panels) must be installed such that there are no openings in the guardrail system that are more than 19 inches (48 cm) wide.

(3) Guardrail systems must be capable of withstanding, without failure, a force of at least 200 pounds (890 N) applied within 2 inches (5 cm) of the top edge, in any outward or downward direction, at any point along the top edge.

(4) When the 200-pound (890–N) test load specified in paragraph (b)(3) of this section is applied in a downward direction, the top edge of the guardrail must not deflect to a height less than 39 inches (99 cm) above the walking-working level.

(5) Midrails, screens, mesh, intermediate vertical members, solid panels, and equivalent structural members must be capable of withstanding, without failure, a force of at least 150 pounds (667 N) applied in any downward or outward direction at any point along the midrail or other member.

(6) Guardrail systems must be surfaced to prevent injury to an employee from punctures or lacerations, and to prevent snagging of clothing.

(7) The ends of all top rails and midrails must not overhang the terminal posts, except where such overhang does not constitute a projection hazard.

(8) Steel banding and plastic banding must not be used as top rails or midrails.

(9) Top rails and midrails must be at least 0.25-inches (0.6 cm) in diameter or thickness.

(10) When guardrail systems are used at hoisting areas, a chain gate or removable guardrail section must be placed across the access opening between guardrail sections when hoisting operations are not taking place.

(11) When guardrail systems are used at holes, they must be erected on all unprotected sides or edges of the hole.

(12) When guardrail systems are used around holes used for the passage of materials, the hole must have not more than two sides provided with removable guardrail sections to allow the passage of materials. When the hole is not in use, it must either be closed over with a cover or a guardrail system must be provided along all unprotected sides or edges.

(13) When guardrail systems are used around holes used as points of access (such as ladderways), they must either be provided with a gate, or be so offset that a person cannot walk directly into the hole.

(14) Guardrail systems used on ramps and runways must be erected along each unprotected side or edge.

(15) Manila, plastic, or synthetic rope being used for top rails or midrails must be inspected as frequently as necessary to ensure that it continues to meet the strength requirements of paragraph (b)(3) of this section.

(16) Criteria for guardrail systems on scaffolds must meet the applicable requirements set forth in part 1926 of this chapter.

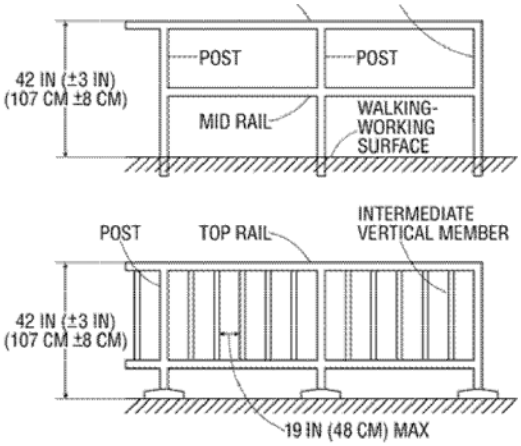

Figure D-10 – Guard Rail Systems

(c) *Safety net systems.* Criteria for safety net systems must meet the applicable requirements set forth in part 1926 of this chapter.

(d) *Designated areas.* (1) Where designated areas are permitted by § 1910.28 (*see* § 1910.28(b)(1)), the employer must ensure that:

(i) Employees remain within the designated area while work operations are underway;

(ii) The work be of a temporary nature, such as maintenance on roof-top equipment;

(iii) Designated areas be established only on surfaces that have a slope from the horizontal of 10 degrees or less (or slope of 4 in 12 or less); and

(iv) The perimeter of the designated area be delineated with a line consisting of a rope, wire, or chain in accordance with the criteria in paragraphs (d)(2) through (d)(4) of this section.

(2) After being erected with the line (such as rope, wire, or chain) attached:

(i) Stanchions must be capable of resisting, without tipping over, a force of at least 16 pounds (71 N) applied horizontally against the stanchion. The force must be applied 30 inches (76 cm) above the work surface and perpendicular to the designated area perimeter, and in the direction of the unprotected side or edge;

(ii) The line must have a minimum breaking or tensile strength of 500 pounds (2.2 kN). After being attached to the stanchions, the line must be capable of supporting, without breaking, the loads applied to the stanchions as prescribed in paragraph (d)(2)(i) of this section;

(iii) The line must be attached at each stanchion in such a way that pulling on one section of the line between stanchions will not result in slack being taken up in adjacent sections before the stanchion tips over;

(iv) The line must be installed in such a manner that its lowest point (including sag) is no less than 34 inches (86 cm) or more than 39 inches (99 cm) from the walking-working surface; and

(v) The line forming the designated area must be clearly visible from any unobstructed location within the designated area up to 25 feet (7.6 m) away, or at the maximum distance a worker may be positioned away from the line, whichever is less.

(3)(i) Stanchions must be erected as close to the work area as is permitted by the task.

(ii) The perimeter of the designated area must be erected at least 6 feet (1.8 m) from the unprotected side or edge.

(iii) When mobile mechanical equipment is being used, the line must be erected not less than 6 feet (1.8 m) from the unprotected side or edge which is parallel to the direction of mechanical equipment operation, and not less than 10 feet (3 m) from the unprotected side or edge which is perpendicular to the direction of mechanical equipment operation.

(4) Access to the designated area must be by a clear path, formed by two lines, attached to stanchions that meet the strength, height, and visibility requirements of this paragraph.

(e) *Covers.* Covers for holes in floors, roofs, and other walking-working surfaces must meet the following requirements:

(1) Covers located in roadways and vehicular aisles must be capable of supporting, without failure, at least twice the maximum axle load of the largest vehicle expected to cross over the cover.

(2) All other covers must be capable of supporting, without failure, at least twice the weight of employees, equipment, and materials that may be imposed on the cover at any one time.

(3) All covers must be secured when installed so as to prevent accidental displacement, *e.g.,* displacement by wind, equipment, or employees.

(4) All covers must be color-coded or marked with the word "HOLE" or "COVER" to provide warning of the hazard.

(5) The requirement of paragraph (e)(4) does not apply to cast iron manhole covers or steel grates, such as those used on streets or roadways.

(f) *Handrail and stair rail systems.* (1) *Height criteria.* (i) Handrails may not be less than 30 inches (76 cm) or more than 37 inches (94 cm) from the upper surface of the tread.

(ii) The height of stair rail systems installed before (date 90 days after the effective date of the final rule) must not be less than 30 inches (76 cm) from the upper surface of the tread. The height of stair rail systems installed on or after (date 90 days after the effective date of the final rule) must be not less than 36 inches (91 cm).

Note to paragraphs (f)(1)(i) and (f)(1)(ii) of this section: The height of a handrail or a stair rail system must be measured from the upper surface of the top rail to the surface of the tread in line with the face of the riser at the forward edge of the tread.

(iii) A stair rail may serve as a handrail when the height of the top edge is not more than 37 inches (94 cm) nor less than 36 inches (91 cm) when measured at the forward edge of the tread surface.

(2) *Finger clearance.* The minimum clearance between handrails, including the top edge of stair rail systems serving as handrails, and any obstructions must be 3 inches (8 cm).

(3) *Surfaces.* Handrail and stair rail systems must be surfaced to prevent

injury to employees from punctures or lacerations, and to prevent snagging of clothing.

(4) *Openings in stair rails.* Openings in a stair rail system must be a maximum of 19 inches (48 cm) in their least dimension.

(5) *Handhold.* Handrails must have the shape and dimension necessary to provide a firm handhold for employees.

(6) *Projection hazards.* Ends of stair rail systems and handrails must not present a projection hazard.

(7) *Strength criteria.* Handrails and the top rails of stair rail systems must be capable of withstanding, without permanent deformation or a loss of support, a force in any downward or outward direction at any point along the top edge, of at least 200 pounds (890 N) applied within 2 inches (5 cm) of the top edge of the rail.

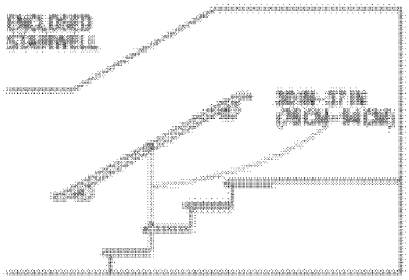

Figure D-11 -- Handrail Measurement

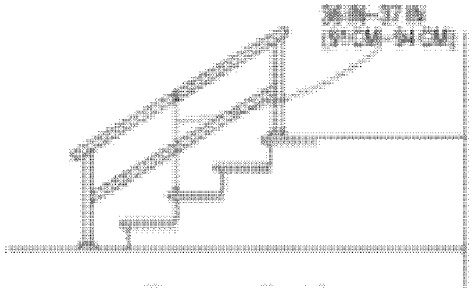

Figure D-12 – Combination Handrail and Stair Rail

(g) *Cages, wells, and platforms used with fixed ladders.* (1) Cages and wells installed on fixed ladders must be designed to permit easy access to or egress from the ladder that they enclose. The cages and wells must be continuous throughout the length of the fixed ladder except for access, egress, and other transfer points. Cages and wells must be designed and constructed to contain employees in the event of a fall and to direct them to a lower landing.

(2) Platforms used with fixed ladders must provide a horizontal surface of at least 24 inches by 30 inches (61 cm by 76 cm).

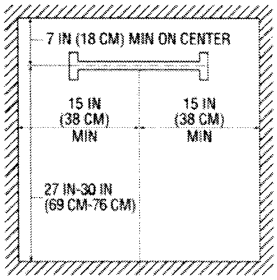

Figure 13 -- Clearances for Fixed Ladders in Wells

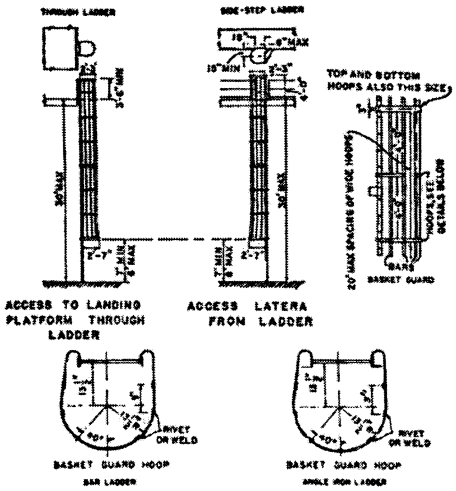

Figure D-14 – Example of General Construction of Cages

(h) *Qualified Climbers.* This option is available only to employees engaged in outdoor advertising operations, as established by § 1910.28(b)(10).

(1) A qualified climber must be physically capable, as demonstrated through observations of actual climbing activities or by a physical examination, of performing the duties that may be assigned.

(2) A qualified climber must have successfully completed a training or apprenticeship program that included hands-on training for the safe climbing of ladders and must be retrained as necessary to ensure the necessary skills are maintained.

(3) The employer must ensure through performance observations and formal classroom or on-the-job training that the qualified climber has the skill to safely perform the climb.

(4) A qualified climber must perform climbing duties as a routine work activity.

(i) *Ladder safety systems.* (1) Design criteria for systems components. Ladder safety systems must permit the employee using the system to ascend or descend without continually having to hold, push, or pull any part of the system, leaving both hands free for climbing.

(2) The connection between the carrier or lifeline and the point of attachment to the body belt or harness must not exceed 9 inches (23 cm) in length.

(3) Mountings for rigid carriers must be attached at each end of the carrier, with intermediate mountings, as necessary, spaced along the entire length of the carrier to provide strength necessary to stop employee falls.

(4) Mountings for flexible carriers must be attached at each end of the carrier. Cable guides utilized with a flexible carrier must be installed at a minimum spacing of 25 feet (7.6 m) and a maximum spacing of 40 feet (12.2 m) along the entire length of the carrier.

(5) The design and installation of mountings and cable guides must not reduce the design strength of the ladder.

(6) Ladder safety systems and their support systems must be capable of withstanding without failure a drop test consisting of an 18-inch (41-cm) drop of a 500-pound (227-kg) weight.

(j) *Personal fall protection systems.* Body belts, harnesses, and other components used in personal fall arrest systems, work positioning systems, and travel restraint systems must meet the applicable requirements of subpart I of this part.

(k) *Protection from falling objects.* Toeboards, guardrails, and canopies, when used as falling object protection, must comply with the following provisions:

(1) Toeboards must be erected along the edge of the overhead walking-working surface for a distance sufficient to protect employees below.

(2) Toeboards must be: (i) A minimum of 3.5 inches (9 cm) in vertical height from their top edge to the level of the walking-working surface. They must have not more than a 0.25-inch (0.5-cm) clearance above the walking-working surface. They must be solid or have openings not over 1 inch (3 cm) in the greatest dimension;

(ii) At least 2.5 inches (6 cm) high where toeboards are used around repair, service, and assembly pits, except that toeboards may be omitted at sections around the pits where the toeboard would prevent access to vehicles over pits.

(3) Where tools, equipment, or materials are piled higher than the top

edge of a toeboard, paneling or screening must be erected from the walking-working surface or toeboard to the top of a guardrail system's top rail or midrail for a distance sufficient to protect employees.

(4) Toeboards must be capable of withstanding, without failure, a force of at least 50 pounds (222 N) applied in any downward or outward direction at any point along the toeboard.

(5) All openings on guardrail systems must be small enough to prevent passage of potential falling objects.

(6) Canopies must be strong enough to prevent collapse and to prevent penetration by any falling objects.

(l) *Grab handles.* Each grab handle must be no less than 12 inches (30 cm) in length, be mounted to give at least 3 inches (8 cm) of clearance from the framing or opening, and be capable of withstanding a maximum horizontal pull-out force equal to two times the intended load or 200 pounds (890 N), whichever is greater.

§ 1910.30 Training requirements.

(a) *Fall Hazards.* (1) The employer must provide training for each employee who uses personal fall protection equipment and those required to be trained as indicated elsewhere in this subpart. The training must enable each employee to recognize the hazards of falling and the procedures to be followed to minimize these hazards.

(2) The employer must ensure that each employee is trained by a qualified person. The employee must be trained in the following areas:

(i) The nature of fall hazards in the work area;

(ii) The correct procedures for erecting, maintaining, disassembling, and inspecting the fall protection systems to be used;

(iii) The use and operation of guardrail systems, safety net systems, warning lines used in designated areas, and other protection; and

(iv) The use, operation, and limitations of personal fall protection systems including proper hook-up, anchoring and tie-off techniques, methods of use, and proper methods of equipment inspection and storage as recommended by the manufacturer.

(b) *Equipment hazards.* (1) The employer must ensure that each employee is trained in the proper care, use, and inspection of equipment covered by this subpart before they use the equipment.

(2) The employer must ensure that each employee is instructed in the proper placing and securing of dockboards to prevent unintentional movement.

(3) The employer must ensure that each employee who uses rope descent systems is trained and retrained as necessary in the proper rigging and safe use of the equipment in accordance with § 1910.27.

(c) *Retraining.* When the employer has reason to believe that any employee who has already been trained does not have the understanding and skill required by paragraphs (a) and (b) of this section, the employer must retrain that employee. Situations where retraining is required include, but are not limited to, the following:

(1) Changes in the workplace render previous training invalid;

(2) Changes in the types of fall protection systems or equipment to be used render previous training invalid; or

(3) Inadequacies in an affected employee's knowledge or use of fall protection systems or equipment indicate that the employee has not retained the requisite understanding or skill.

(d) *Training must be understandable.* The employer must provide information and training to each employee in a manner that is understandable to that employee.

2. Revise the authority citation for subpart F of part 1910 to read as follows:

Authority: Secs. 4, 6, 8, Occupational Safety and Health Act of 1970 (29 U.S.C. 653, 655, 657); Secretary of Labor's Order No. 12–71 (36 FR 8754), 8–76 (41 FR 25059) 9–83 (48 FR 35736), 1–90 (55 FR 9033), 6–96 (62 FR 111), 3–2000 (65 FR 50017), 5–2002 (67 FR 65008), or 5–2007 (72 FR 31159), as applicable; and 29 CFR part 1911.

Subpart F—Powered Platforms, Manlifts, and Vehicle-Mounted Work Platforms

3–4. In § 1910.66:

A. Revise paragraphs (f)(5)(ii)(L) and (M), (f)(5)(iii)(B), and (j);

B. Remove and reserve Appendix C; and

C. Amend Appendix D by revising paragraph (c)(4) to read as follows:

§ 1910.66 Powered platforms for building maintenance.

* * * * *

(f) * * *

(5) * * *

(ii) * * *

(L) The platform shall be provided with a secondary wire rope suspension system if the platform contains overhead structures which restrict the emergency egress of employees. A horizontal lifeline or a direct connection anchorage shall be provided, as part of a personal fall arrest system which meets the requirements of subpart I of this part, for each employee on such a platform.

(M) A vertical lifeline shall be provided as part of a personal fall arrest system which meets the requirements of subpart I of this part, for each employee on a working platform suspended by two or more wire ropes, if the failure of one wire rope or suspension attachment will cause the platform to upset. If a secondary wire rope suspension is used, vertical lifelines are not required for the personal fall arrest system, provided that each employee is attached to a horizontal lifeline anchored to the platform.

(iii) * * *

(B) Each single point suspended working platform shall be provided with a secondary wire rope suspension system which will prevent the working platform from falling should there be a failure of the primary means of support, or if the platform contains overhead structures which restrict the egress of the employees. A horizontal lifeline or a direct connection anchorage shall be provided, as part of a personal fall arrest system which meets the requirements of subpart I of this part, for each employee on the platform.

* * * * *

(j) *Personal fall protection.* Employees on working platforms shall be protected by a personal fall arrest system meeting the requirements of subpart I of this part and as otherwise provided by this standard.

* * * * *

Appendix C to § 1910.66 [Reserved]

Appendix D to § 1910.66—Existing Installations (Mandatory)

* * * * *

(c) * * *

(4) *Access to the roof car.* Safe access to the roof car and from the roof car to the working platform shall be provided. If the access to the roof car at any point of its travel is not over the roof area or where otherwise necessary for safety, then self-closing, self-locking gates shall be provided. Applicable provisions of subpart D, Walking-Working Surfaces, apply.

* * * * *

5. In § 1910.67, revise paragraph (c)(2)(v) to read as follows:

§ 1910.67 Vehicle-mounted elevating and platforms.

* * * * *

(c) * * *

(2) * * *

(v) A positioning system or a personal fall arrest system which complies with subpart I of this part shall be worn and attached to the boom or basket when working from an aerial lift.

* * * * *

6. In § 1910.68, revise paragraphs (b)(8)(ii) and (b)(12) to read as follows:

§ 1910.68 Manlifts.

* * * * *

(b) * * *

(8) * * *

(ii) *Construction.* The rails shall be standard guardrails with toeboards meeting the provisions in subpart D of this part.

* * * * *

(12) *Emergency exit ladder.* A fixed metal ladder accessible from both the "up" and "down" run of the manlift shall be provided for the entire travel of the manlift. Such escape ladders shall comply with subpart D of this part.

* * * * *

Subpart I—[Amended]

7. The authority citation for subpart I is revised to read as follows:

Authority: Sections 4, 6, and 8 of the Occupational Safety and Health Act of 1970 (29 U.S.C. 653, 655, 657); Secretary of Labor's Order No. 12–71 (36 FR 8754), 8–76 (41 FR 25059), 9–83 (48 FR 35736), 1–90 (55 FR 9033), 5–2002 (67 FR 65008), or 5–2007 (72 FR 31159) as applicable, and 29 CFR part 1911.

Sections 29 CFR 1910.133, 1910.135, and 1910.136 also issued under 5 U.S.C. 553.

8. Paragraph (g) of § 1910.132 is revised to read as follows:

§ 1910.132 General requirements.

* * * * *

(g) Paragraphs (d) and (f) of this section apply only to §§ 1910.133, 1910.135, 1910.136, 1910.138, and 1910.140. Paragraphs (d) and (f) of this section do not apply to §§ 1910.134 and 1910.137.

§ 1910.139 [Reserved]

9. Section 1910.139 is reserved.

10. Add new § 1910.140 to read as follows:

§ 1910.140 Personal fall protection systems.

(a) *Scope and application.* Personal fall protection systems required by part 1910 must comply with the applicable provisions of this section. This section establishes performance, care, and use criteria for all personal fall protection systems covered by this section. Additional requirements for specific types of personal fall protection systems are contained in paragraphs (d) and (e) of this section.

(b) *Definitions.*

Anchorage means a secure point of attachment for lifelines, lanyards, or deceleration devices.

Belt terminal means an end attachment of a window cleaner's positioning system used for securing the belt or harness to a window cleaner's belt anchor.

Body belt means a strap with means both for securing about the waist and for attaching to other components such as a lanyard or lifeline, used with positioning systems, travel restraint systems, or ladder safety systems.

Body harness means straps which may be secured about the employee in a manner to distribute the fall arrest forces over at least the thighs, pelvis, waist, chest, and shoulders with means for attaching it to other components of a personal fall arrest system.

Buckle means any device for holding the body belt or body harness closed around the employee's body.

Carrier means the track of a ladder safety system consisting of a flexible cable or rigid rail which is secured to the ladder or structure by mountings.

Competent person means a person who is capable of identifying hazardous or dangerous conditions in any personal fall protection system or any component thereof, as well as in their application and uses with related equipment.

Connector means a device that is used to couple (connect) parts of the fall protection system together.

D-ring means a connector used integrally in a harness as an attachment element or fall arrest attachment; in a lanyard, energy absorber, lifeline, or anchorage connector as an integral connector; or in a positioning or travel restraint system as an attachment element.

Deceleration device means any mechanism that serves to dissipate energy during a fall.

Deceleration distance means the vertical distance a falling employee travels before stopping, from the point at which the deceleration device begins to operate, excluding lifeline elongation and free fall distance. It is measured as the distance between the location of an employee's body harness attachment point at the moment of activation (at the onset of fall arrest forces) of the deceleration device during a fall, and location of that attachment point after the employee comes to a full stop.

Equivalent means alternative designs, materials or methods to protect against a hazard, which the employer can demonstrate will provide an equal or greater degree of safety for employees compared to the methods, materials, or designs specified in the standard.

Free fall means the act of falling before the personal fall arrest system begins to apply force to arrest the fall.

Free fall distance means the vertical displacement of the fall arrest attachment point on the employee's body belt or body harness between onset of the fall and just before the system begins to apply force to arrest the fall. This distance excludes deceleration distance, lifeline and lanyard elongation, but includes any deceleration device slide distance or self-retracting lifeline/lanyard extension before the devices operate and fall arrest forces occur.

Lanyard means a flexible line of rope, wire rope, or strap which generally has a connector at each end for connecting the body belt or body harness to a deceleration device, lifeline, or anchorage.

Lifeline means a component consisting of a flexible line for connection to an anchorage at one end to hang vertically (vertical lifeline) or for connection to anchorages at both ends to stretch horizontally (horizontal lifeline), and which serves as a means for connecting other components of a personal fall protection system to the anchorage.

Personal fall arrest system means a system used to arrest an employee in a fall from a working level. It consists of an anchorage, connector, and a body harness and may include a lanyard, deceleration device, lifeline, or suitable combinations of these.

Personal fall protection system means a system used to protect an employee from falling, or to safely arrest an employee's fall, should a fall occur. Examples include: A personal fall arrest system, a positioning system, or a travel restraint system.

Positioning system (sometimes called a work positioning system) means a system of equipment and connectors which, when used with its body belt or body harness, allows an employee to be supported on an elevated vertical surface, such as a wall or windowsill, and work with both hands free.

Qualified means a person who, by possession of a recognized degree, certificate, or professional standing, or who by extensive knowledge, training, and experience has successfully demonstrated the ability to solve or resolve problems relating to the subject matter, the work, or the project.

Rope grab means a deceleration device that travels on a lifeline and automatically, by friction, engages the lifeline and locks so as to arrest the fall of an employee. A rope grab usually employs the principle of inertial locking, cam/lever locking, or both.

Self-retracting lifeline/lanyard means a deceleration device containing a drum-wound line which can be slowly extracted from, or retracted onto, the drum under slight tension during normal movement by the employee, and

after onset of a fall, automatically locks the drum and arrests the fall.

Snaphook means a connector comprised of a hook-shaped body with a normally closed gate or similar arrangement that may be manually opened to permit the hook to receive an object and when released, automatically closes and locks to retain the object. Opening requires two separate actions. Snaphooks are generally one of two types, namely:

(1) Automatic-locking type (permitted) with a self-closing and self-locking gate which remains closed and locked until intentionally unlocked and opened for connection or disconnection; and

(2) Non-locking type (prohibited) with a self-closing gate which remains closed, but not locked, until intentionally opened for connection or disconnection.

Travel restraint (tether) line means a rope or wire rope used to transfer forces from a body support to an anchorage or anchorage connector in a travel restraint system.

Travel restraint system means a combination of an anchorage, anchorage connector, lanyard (or other means of connection), and body support intended to be used by an employee to limit travel to prevent exposure to a fall hazard. A travel restraint system is used such that it does not support any portion of the employee's weight; otherwise the system would be a positioning system or a personal fall arrest system.

Window cleaner's belt means a belt that consists of a waist-belt, an integral terminal runner or strap, and belt terminals.

Window cleaner's belt anchor (window anchor) means specifically designed fall-preventing attachment points, permanently affixed to a window frame or to a building part immediately adjacent to the window frame, for direct attachment of the terminal portion of a window cleaner's belt.

Window cleaner's positioning system means a system which consists of a window cleaner's belt secured to window anchors.

Work positioning system (*see* "*Positioning system*" above).

(c) *General requirements.* The following requirements apply to all personal fall protection systems.

(1) Connectors must be drop forged, pressed or formed steel, or made of equivalent materials.

(2) Connectors must have a corrosion-resistant finish, and all surfaces and edges must be smooth to prevent damage to interfacing parts of the system.

(3) When vertical lifelines are used, each employee must be attached to a separate lifeline.

(4) Lanyards and vertical lifelines must have a minimum breaking strength of 5,000 pounds (22.2 kN).

Note to paragraph (c)(4) of this section: The use of knots in lanyards and vertical lifelines may significantly reduce the breaking strength.

(5) Self-retracting lifelines and lanyards that automatically limit free fall distance to 2 feet (0.61 m) or less must have components capable of sustaining a minimum tensile load of 3,000 pounds (13.3 kN) applied to the device with the lifeline or lanyard in the fully extended position.

(6) Self-retracting lifelines and lanyards that do not limit free fall distance to 2 feet (0.61 m) or less, ripstitch lanyards, and tearing and deforming lanyards must be capable of sustaining a minimum tensile load of 5,000 pounds (22.2 kN) applied to the device with the lifeline or lanyard in the fully extended position.

(7) D-rings and snaphooks must be capable of sustaining a minimum tensile load of 5,000 pounds (22.2 kN).

(8) D-rings and snaphooks must be proof tested to a minimum tensile load of 3,600 pounds (16 kN) without cracking, breaking, or incurring permanent deformation.

(9) Snaphooks must be the locking type, which require two separate, consecutive movements to open.

(10) Unless designed for the following connections, snaphooks must not be connected:

(i) Directly to webbing, rope, or wire rope;

(ii) To each other;

(iii) To a D-ring to which another snaphook or connector is attached;

(iv) To a horizontal life line; or

(v) To any object that is incompatibly shaped or dimensioned in relation to the snaphook such that unintentional disengagement could occur when the connected object depresses the snaphook gate, allowing the components to separate.

(11) Horizontal lifelines:

(i) Must be designed, installed, and used under the supervision of a qualified person; and

(ii) Must be part of a complete personal fall arrest system that maintains a safety factor of at least two.

(12) Anchorages used for attachment to personal fall protection equipment must be independent of any anchorage being used to support or suspend platforms on which employees work.

(13) Except for window cleaner's belt anchors, which are covered under paragraph (e) of this section, anchorages must be capable of supporting at least 5,000 pounds (22.2 kN) for each employee attached, or must be designed, installed, and used under the supervision of qualified person as part of a complete personal fall protection system that maintains a safety factor of at least two.

(14) Travel restraint lines must be capable of sustaining a tensile load of at least 5,000 pounds (22.2 kN).

(15) Lifelines and carriers must not be made of natural fiber rope. When polypropylene ropes are used, they must contain an ultraviolet (UV) light inhibitor.

(16) Personal fall protection systems and their components must be used exclusively for employee fall protection and not for any other purpose, such as hoisting equipment or materials.

(17) A personal fall protection system or its components subjected to impact loading must be immediately removed from service and must not be used again for employee protection until a competent person inspects it and determines that it is undamaged and suitable for re-use.

(18) Personal fall protection systems must be inspected before each use for mildew, wear, damage, and other deterioration, and defective components must be removed from service.

(19) Ropes, belts, lanyards, and harnesses used for personal fall protection must be compatible with all connectors used.

(20) Ropes, belts, lanyards, lifelines, and harnesses used for personal fall protection must be protected from being cut, abraded, melted, or otherwise damaged.

(21) The employer must provide for prompt rescue of employees in the event of a fall.

(22) Personal fall protection systems must be worn with the attachment point of the body harness located in the center of the wearer's back near shoulder level, or above the wearer's head, except that the attachment point may be located in the pre-sternal position if the free fall distance is limited to 2 feet (0.6 m) or less and the maximum arresting forces are limited to 900 lbs (4 kN).

(d) *Personal fall arrest systems*—(1) *System performance criteria.* In addition to the general requirements in paragraph (c) of this section, personal fall arrest systems must, when stopping a fall:

(i) Limit maximum arresting force on an employee to 1,800 pounds (8 kN);

(ii) Bring an employee to a complete stop and limit the maximum

deceleration distance an employee travels to 3.5 feet (1.1 m); and

(iii) Have sufficient strength to withstand twice the potential impact energy of an employee free falling a distance of 6 feet (1.8 m), or the free fall distance permitted by the system, whichever is less.

Note to paragraph (d)(1) of this section: If the personal fall arrest system meets the criteria and protocols contained in Appendix D to § 1910.140, and if the system is being used by an employee having a combined tool and body weight of less than 310 pounds (140 kg), the system will be considered to be in compliance with the provisions of paragraphs (d)(1)(i) through (d)(1)(iii) of this section. If the system is used by an employee having a combined tool and body weight of 310 pounds (140 kg) or more, then the employer must appropriately modify the criteria and protocols of the appendix to provide proper protection for such heavier weights, or the system will not be deemed to be in compliance with the requirements of paragraphs (d)(1)(i) through (d)(1)(iii) of this section.

(2) *System use criteria.*

(i) On suspended scaffolds or similar work platforms with horizontal lifelines that may become vertical lifelines, the devices used to connect to the horizontal lifeline must be capable of locking in both directions on the lifeline.

(ii) Personal fall arrest systems must be rigged in such a manner that an employee can neither free fall more than 6 feet (1.8 m) nor contact any lower level.

(3) *Body belts.* Body belts are prohibited as part of a personal fall arrest system.

(e) *Positioning systems.* In addition to the general requirements in paragraph (c) of this section, positioning systems must meet the following requirements.

(1) *System performance requirements.*

(i) *General.* All positioning systems, except window cleaner's positioning systems, must be capable of withstanding, without failure, a drop test consisting of a 4-foot (1.2-m) drop of a 250-pound (113-kg) weight.

Note to paragraph (e)(1)(i) of this section: Positioning systems meeting the tests contained in Appendix D to 1910.140 are considered to be in compliance with these paragraphs.

(ii) *Window cleaner's positioning systems.* All window cleaner's positioning systems must:

(A) Be capable of withstanding without failure a drop test consisting of a 6-foot (1.8-m) drop of a 250-pound (113-kg) weight; and,

(B) Limit the initial arresting force to not more than 2,000 pounds (8.9 kN), with a duration not to exceed 2 milliseconds, and must limit any subsequent arresting forces imposed on the falling employee to not more than 1,000 pounds (4.5 kN).

Note to paragraph (e)(1)(ii) of this section: Positioning systems meeting the tests contained in Appendix D to 1910.140 are considered to be in compliance with these paragraphs.

(iii) *Lineman's body belt and pole strap systems.* The following additional test provisions apply to lineman's body belt and pole strap systems:

(A) A dielectric test of 819.7 volts, AC, per centimeter (25,000 volts per foot) for 3 minutes without visible deterioration;

Note to paragraph (e)(1)(iii)(A) of this section: Positioning straps that pass direct current tests at equivalent voltages are considered as meeting this requirement.

(B) A leakage test of 98.4 volts, AC, per centimeter (3,000 volts per foot) with a leakage current of no more than 1 mA;

Note to paragraph (e)(1)(iii)(B) of this section: Positioning straps that pass direct current tests at equivalent voltages are considered as meeting this requirement.

(2) *System use criteria for window cleaners positions systems.*

(i) Window cleaner's belts must be designed and constructed so that:

(A) Belt terminals will not pass through their fastenings on the belt or harness should one terminal become loosened from its window anchor; and

(B) The length of the runner from terminal tip to terminal tip is 8 feet (2.44 m) or less.

(ii) The anchors on a building to which the belt is to be fastened must be installed in the side frames of the window or in the mullions at a point not less than 42 inches (106.7 cm) or more than 51 inches (129.5 cm) above the window sill.

(iii) Each anchor, and the structure to which it is attached, must be capable of supporting a minimum load of 6,000 pounds (26.5 kN).

(iv) Rope that has sustained wear or deterioration materially affecting its strength must not be used.

(v) An anchor whose fastenings or supports are damaged or deteriorated must be removed or rendered unusable by detachment of its anchor head.

(vi) The use of an installed window cleaner's belt anchor for any purpose other than attachment of a window cleaner's belt is prohibited.

(vii) Both belt terminals must be attached to separate window cleaner's belt anchors during the cleaning operation.

(viii) Cleaning work is not permitted on a sill or ledge on which there is snow, ice, or any other slippery condition, or on a weakened or rotted sill or ledge.

(ix) A window cleaner may work from a windowsill only if a minimum standing room in relation to slope is provided as follows:

(A) When the sill width is at least 4 inches (10.1 cm), work is permitted with a slope of the sill from horizontal up to 15 degrees;

(B) For slopes between 15 and 30 degrees from horizontal, but in no case greater than 30, the minimum acceptable sill width is four inches (10.1 cm), plus 0.4 inches (1.0 cm) for every degree of slope greater than 15 degrees.

(x) The employer must ensure that the window cleaner attach at least one belt terminal to a window anchor before climbing through the window opening. The belt must not be completely disconnected from both anchors until the employee is back inside the window opening.

(xi)(A) The employer must ensure the window cleaner does not pass from one window to another while outside the building, but must return inside and repeat the belt terminal attachment procedure for each window as described in paragraph (e)(13) of this section.

(B) Traveling on the outside of the building is permitted if at least one window cleaner's belt terminal is attached at all times and the distance between anchors does not exceed 4 feet (1.2 m) horizontally, unless the sill or ledge is at least 1 foot (0.31 m) wide and the slope is less than 5 degrees, in which case the distance between anchors may be as much as 6 feet (1.8 m). However, this method of traveling shall not be permitted if the sill or ledge is not continuous with at least 6 inches (0.15 m) in front of the mullions or if each window unit is not readily accessible.

11. Add new Appendices C and D to subpart I of part 1910 to read as follows:

Appendix C to Subpart I of Part 1910—Personal Fall Protection Systems Non-Mandatory Guidelines

The following information generally applies to all personal fall protection systems and is intended to assist employers and employees comply with the requirements of § 1910.140 for personal fall protection systems.

(a) *Planning considerations.* It is important for employers to plan prior to using personal fall protection systems. Probably the most overlooked component of planning is locating suitable anchorage points. Such planning should ideally be done before the structure or building is constructed so that anchorage points can be used later for window cleaning or other building maintenance.

(b) *Selection and use considerations.* (1) The kind of personal fall protection system selected should be appropriate for the employee's specific work situation. Free fall distances should always be kept to a minimum. Many systems are designed for particular work applications, such as climbing ladders and poles; maintaining and servicing equipment; and window cleaning. Consideration should be given to the environment in which the work will be performed. For example, the presence of acids, dirt, moisture, oil, grease, or other substances, and their potential effects on the system selected, should be evaluated. Hot or cold environments may also affect fall protection systems. Wire rope should not be used where electrical hazards are anticipated. As required by § 1910.140(c)(21), the employer must provide a means for promptly rescuing an employee should a fall occur.

(2) Where lanyards, connectors, and lifelines are subject to damage by work operations, such as welding, chemical cleaning, and sandblasting, the component should be protected, or other securing systems should be used. Unless designed for use in a personal fall protection system, equipment such as linemen's pole straps should not be used as lanyards because such equipment may not meet the strength and performance criteria necessary for a personal fall arrest system. The employer should fully evaluate the work conditions and environment (including seasonal weather changes) before selecting the appropriate personal fall protection system. Once in use, the system's effectiveness should be monitored. A program for cleaning and maintaining the system may be necessary.

(c) *Testing considerations.* Before purchasing a personal fall protection system, an employer should insist that the supplier provide information about its test performance (using recognized test methods) so the employer will know that the system meets the criteria in § 1910.140. Otherwise, the employer should test the equipment to ensure that it is in compliance. Appendix D to this subpart contains test methods which are recommended for evaluating the performance of any system. There are some circumstances in which an employer can evaluate a system based on data and calculations derived from the testing of similar systems. Enough information must be available for the employer to demonstrate that its system and the tested system(s) are similar in both function and design.

(d) *Component compatibility considerations.* Ideally, a personal fall protection system is designed, tested, and supplied as a complete system. However, it is common practice for lanyards, connectors, lifelines, deceleration devices, body belts, and body harnesses to be interchanged since some components wear out before others. Employers and employees should realize that not all components are interchangeable. For instance, a lanyard should not be connected between a body harness and a deceleration device of the self-retracting type (unless specifically allowed by the manufacturer) since this can result in additional free fall for which the system was not designed. In addition, positioning components, such as pole straps, ladder hooks and rebar hooks, should not be used in personal fall arrest systems unless they meet the appropriate requirements of part 1910 (e.g., §§ 1910.140, .268 and .269). Any substitution or change to a personal fall protection system should be fully evaluated or tested by a competent person to determine that it meets applicable OSHA standards before the modified system is put in use.

(e) *Employee training considerations.* As required by § 1910.30, before an employee uses a fall protection system, the employer must ensure that he or she is trained in the proper use of the system. This may include the following: The limits of the system; proper anchoring and tie-off techniques; estimating freefall distance, including determining elongation and deceleration distance; methods of use; and inspection and storage. Careless or improper use of fall protection equipment can result in serious injury or death. Employers and employees should become familiar with the material in this standard and appendix, as well as manufacturers' recommendations, before a system is used. It is important for employees to be aware that certain tie-offs (such as using knots and tying around sharp edges) can reduce the overall strength of a system. Employees also need to know the maximum permitted free fall distance. Training should stress the importance of inspections prior to use, the limitations of the equipment to be used, and unique conditions at the worksite that may be important. Also, OSHA suggests that rope be used according to manufacturer's recommendations, especially if polypropylene rope is used.

(f) *Instruction considerations.* Employers should obtain comprehensive instructions from the supplier or a qualified person as to the system's proper use and application, including, where applicable:

1. The force measured during the sample force test;
2. The maximum elongation measured for lanyards during the force test;
3. The deceleration distance measured for deceleration devices during the force test;
4. Caution statements on critical use limitations;
5. Limits of the system;
6. Proper hook-up, anchoring and tie-off techniques, including the proper D-ring or other attachment point to use on the body harness;
7. Proper climbing techniques;
8. Methods of inspection, use, cleaning, and storage; and
9. Specific lifelines that may be used.

(g) *Inspection considerations.* Personal fall protection systems must be regularly inspected before each use. Any component with a significant defect, such as a cut, tear, abrasion, mold, or evidence of undue stretching, an alteration or addition that might affect its efficiency, damage due to deterioration, fire, acid, or other corrosive damage, distorted hooks or faulty hook springs, tongues that are unfitted to the shoulder of buckles, loose or damaged mountings, non-functioning parts, or wear, or internal deterioration must be removed from service immediately, and should be tagged or marked as unusable, or destroyed.

(h) *Rescue considerations.* As required by § 1910.140(c)(21), when personal fall arrest systems are used, special consideration must be given to rescuing an employee should a fall occur. The availability of rescue personnel, ladders or other rescue equipment should be evaluated. In some situations, equipment allowing employees to rescue themselves after the fall has been arrested may be desirable, such as devices that have descent capability.

(i) *Tie-off considerations.* Employers and employees should at all times be aware that the strength of a personal fall arrest system is based on its being attached to an anchoring system that does not significantly reduce the strength of the system (such as an eye-bolt/snaphook anchorage). Therefore, if a means of attachment is used that will reduce the strength of the system, that component should be replaced by a stronger one that will also maintain the appropriate maximum deceleration characteristics. The following is a listing of some situations in which employers and employees should be especially cautious.

1. *Tie-off using a knot in the lanyard or lifeline (at any location).* The strength of the line can be reduced by 50 percent or more if a knot is used. Therefore, a stronger lanyard or lifeline should be used to compensate for the knot, or the lanyard length should be reduced (or the tie-off location raised) to minimize free fall distance, or the lanyard or lifeline should be replaced by one which has an appropriately incorporated connector to eliminate the need for a knot.

2. *Tie-off around rough or sharp (e.g. "H" or "I" beams) surfaces.* This practice reduces strength drastically. Such tie-offs should be avoided whenever possible. An alternate means should be used such as a snaphook/D-ring connection, a tie-off apparatus (steel cable tie-off), an effective padding of the surfaces, or an abrasion-resistant strap around the supporting member. If these alternative means of tie-off are not available, the employer should try to minimize the potential free fall distance.

3. *Knots.* Sliding hitch knots should not be used except in emergency situations. The one-and-one sliding hitch knot should never be used because it is unreliable in stopping a fall. The two-and-two, or three-and-three knots (preferable) may be used in emergency situations; however, care should be taken to limit free fall distances because of reduced lifeline/lanyard strength. OSHA recommends that a competent or qualified person oversee the use of knots.

(j) *Horizontal lifelines.* Horizontal lifelines, depending on their geometry and angle of sag, may be subjected to greater loads than the impact load imposed by an attached component. When the angle of horizontal lifeline sag is less than 30 degrees, the impact force imparted to the lifeline by an attached lanyard is greatly amplified. For example, with a sag angle of 15 degrees the force amplification is about 2:1, and at 5 degrees sag it is about 6:1. Depending on the angle of sag, and the line's elasticity, the strength of the horizontal lifeline, and the anchorages to which it is attached should be increased a number of times over that of the lanyard.

Extreme care should be taken in considering a horizontal lifeline for multiple tie-offs. If there are multiple tie-offs to a horizontal lifeline, and one employee falls, the movement of the falling employee and the horizontal lifeline during arrest of the fall may cause other employees to fall. Horizontal lifeline and anchorage strength should be increased for each additional employee to be tied-off. For these and other reasons, the systems using horizontal lifelines must be designed only by qualified persons. OSHA recommends testing installed lifelines and anchors prior to use.

(k) *Eye-bolts.* It must be recognized that the strength of an eye-bolt is rated along the axis of the bolt, and that its strength is greatly reduced if the force is applied at right angles to this axis (in the direction of its shear strength). Care should also be exercised in selecting the proper diameter of the eye to avoid creating a roll-out hazard (accidental disengagement of the snaphook from the eye-bolt).

(l) *Vertical lifeline considerations.* As required by § 1910.140(c)(3), each employee must have a separate lifeline when the lifeline is vertical. If multiple tie-offs to a single lifeline are used, and one employee falls, the movement of the lifeline during the arrest of the fall may pull other employees' lanyards, causing them to fall as well.

(m) *Snaphook considerations.* As required by § 1910.140(c)(10), the following connections must be avoided unless the locking snaphook has been designed for them because they are conditions that can result in rollout:

(1) Direct connection of a snaphook to a horizontal lifeline;

(2) Two (or more) snaphooks connected to one D-ring;

(3) Two snaphooks connected to each other;

(4) Snaphooks connected directly to webbing, rope, or wire rope; and

(5) Improper dimensions of the D-ring, rebar, or other connection point in relation to the snaphook dimensions which would allow the snaphook gate to be depressed by a turning motion of the snaphook.

(n) *Free fall considerations.* Employers and employees should always be aware that a system's maximum arresting force is evaluated under normal use conditions established by the manufacturer, and in no case using free fall distance in excess of 6 feet (1.8 m). Even a few additional feet of free fall can significantly increase the arresting force on the employee, possibly to the point of causing injury and possibly exceeding the strength of the system. Because of this, the free fall distance should be kept to a minimum, and, as required by § 1910.140(d)(2), must never be greater than 6 feet (1.8 m). To assure this, the tie-off attachment point to the lifeline or anchor should be located at or above the connection point of the fall arrest equipment to the harness. (Otherwise, additional free fall distance is added to the length of the connecting means (*i.e.,* lanyard)). Tying off to the walking-working surface will often result in a free fall greater than 6 feet (1.8 m). For instance, if a 6-foot (1.8-m) lanyard is used, the total free fall distance will be the distance from the walking-working level to the harness connection plus the 6 feet (1.8 m) of lanyard.

(o) *Elongation and deceleration distance considerations.* During fall arrest, a lanyard will stretch or elongate, whereas activation of a deceleration device will result in a certain stopping distance. These distances should be available with the lanyard or device's instructions and must be added to the free fall distance to arrive at the total fall distance before an employee is fully stopped. The additional stopping distance may be significant if the lanyard or deceleration device is attached near or at the end of a long lifeline, which may itself add considerable distance due to its own elongation. As required by § 1910.140(d)(2), sufficient distance to allow for all of these factors must also be maintained between the employee and obstructions below, to prevent an injury due to impact before the system fully arrests the fall. In addition, a minimum of 12 feet (3.7 m) of lifeline should be allowed below the securing point of a rope-grab-type deceleration device, and the end terminated to prevent the device from sliding off the lifeline. Alternatively, the lifeline should extend to the ground or the next working level below. These measures are suggested to prevent the employee from inadvertently moving past the end of the lifeline and having the rope grab become disengaged from the lifeline.

(p) *Obstruction considerations.* In selecting a location for tie-off, employers and employees should consider obstructions in the potential fall path of the employee. Tie-offs that minimize the possibilities of exaggerated swinging should be considered.

Appendix D to Subpart I—Test Methods and Procedures for Personal Fall Protection Systems Non-Mandatory Guidelines

This appendix contains test methods for personal fall protection systems which may be used to determine if they meet the system performance criteria specified in paragraphs (d) and (e) of § 1910.140.

Test Methods for Personal Fall Arrest Systems (Paragraph (d))

(a) *General.* The following sets forth test procedures for personal fall arrest systems as defined in paragraph (d) of § 1910.140.

(b) *General test conditions.*

(1) Lifelines, lanyards and deceleration devices should be attached to an anchorage and connected to the body harness in the same manner as they would be when used to protect employees.

(2) The fixed anchorage should be rigid, and should not have a deflection greater than 0.04 inches (1 mm) when a force of 2,250 pounds (10 kN) is applied.

(3) The frequency response of the load measuring instrumentation should be 120 Hz.

(4) The test weight used in the strength and force tests should be a rigid, metal cylindrical or torso-shaped object with a girth of 38 inches plus or minus 4 inches (96 cm plus or minus 10 cm).

(5) The lanyard or lifeline used to create the free fall distance should be supplied with the system, or in its absence, the least elastic lanyard or lifeline available should be used with the system.

(6) The test weight for each test should be hoisted to the required level and should be quickly released without having any appreciable motion imparted to it.

(7) The system's performance should be evaluated, taking into account the range of environmental conditions for which it is designed to be used.

(8) Following the test, the system need not be capable of further operation.

(c) *Strength test.*

(1) During the testing of all systems, a test weight of 300 pounds plus or minus 3 pounds (136.4 kg plus or minus 1.4 kg) should be used. (*See* item number 4 of paragraph (b)of this appendix.)

(2) The test consists of dropping the test weight once. A new unused system should be used for each test.

(3) For lanyard systems, the lanyard length should be 6 feet plus or minus 2 inches (1.83 plus or minus 5 cm) as measured from the fixed anchorage to the attachment on the body harness.

(4) For rope-grab-type deceleration systems, the length of the lifeline above the centerline of the grabbing mechanism to the lifeline's anchorage point should not exceed 2 feet (0.61 m).

(5) For lanyard systems, for systems with deceleration devices which do not automatically limit free fall distance to 2 feet (0.61 m) or less, and for systems with deceleration devices which have a connection distance in excess of 1 foot (0.3 m) (measured between the centerline of the lifeline and the attachment point to the body harness), the test weight should be rigged to free fall a distance of 7.5 feet (2.3 m) from a point that is 1.5 feet (46 cm) above the anchorage point, to its hanging location (6 feet below the anchorage). The test weight should fall without interference, obstruction, or hitting the floor or ground during the test. In some cases a non-elastic wire lanyard of sufficient length may need to be added to the system (for test purposes) to create the necessary free fall distance.

(6) For deceleration device systems with integral lifelines or lanyards that automatically limit free fall distance to 2 feet (0.61 m) or less, the test weight should be rigged to free fall a distance of 4 feet (1.22 m).

(7) Any weight that detaches from the harness should constitute failure for the strength test.

(d) *Force test*—(1) *General.* The test consists of dropping the respective test weight specified in (d)(2)(i) or (d)(3)(i) once. A new, unused system should be used for each test.

(2) *For lanyard systems.* (i) A test weight of 220 pounds plus or minus three pounds (100 kg plus or minus 1.6 kg) should be used. (*See* item number 4 of paragraph (b) above.)

(ii) Lanyard length should be 6 feet plus or minus 2 inches (1.83 m plus or minus 5 cm) as measured from the fixed anchorage to the attachment on the body harness.

(iii) The test weight should fall free from the anchorage level to its hanging location (a total of 6 feet (1.83 m) free fall distance) without interference, obstruction, or hitting the floor or ground during the test.

(3) *For all other systems.* (i) A test weight of 220 pounds plus or minus 2 pounds (100 kg plus or minus 1.0 kg) should be used. (*See* item number 4 of paragraph (b) of this appendix.)

(ii) The free fall distance to be used in the test should be the maximum fall distance physically permitted by the system during normal use conditions, up to a maximum free fall distance for the test weight of 6 feet (1.83 m), except as follows:

(A) For deceleration systems having a connection link or lanyard, the test weight should free fall a distance equal to the connection distance (measured between the centerline of the lifeline and the attachment point to the body harness).

(B) For deceleration device systems with integral lifelines or lanyards that automatically limit free fall distance to 2 feet (0.61 m) or less, the test weight should free fall a distance equal to that permitted by the system in normal use. (For example, to test a system with a self-retracting lifeline or lanyard, the test weight should be supported and the system allowed to retract the lifeline or lanyard as it would in normal use. The test weight would then be released and the force and deceleration distance measured).

(4) *Failure.* A system fails the force test when the recorded maximum arresting force exceeds 2,520 pounds (11.2 kN) when using a body harness.

(5) *Distances.* The maximum elongation and deceleration distance should be recorded during the force test.

(e) *Deceleration device tests*—(1) *General.* The device should be evaluated or tested under the environmental conditions (such as rain, ice, grease, dirt, and type of lifeline) for which the device is designed.

(2) *Rope-grab-type deceleration devices.* (i) Devices should be moved on a lifeline 1,000 times over the same length of line a distance of not less than 1 foot (30.5 cm), and the mechanism should lock each time.

(ii) Unless the device is permanently marked to indicate the type of lifelines that must be used, several types (different diameters and different materials), of lifelines should be used to test the device.

(3) *Other self-activating-type deceleration devices.* The locking mechanisms of other self-activating-type deceleration devices designed for more than one arrest should lock each of 1,000 times as they would in normal service.

Test Methods for Positioning Systems (Paragraph (e))

(a) *General.* The following sets forth test procedures for positioning systems as defined in paragraph (e) of § 1910.140. The requirements in this appendix for personal fall arrest systems set forth procedures that may be used, along with the procedures listed below, to determine compliance with the requirements for positioning systems.

(b) *Test conditions.*

(1) The fixed anchorage should be rigid and should not have a deflection greater than 0.04 inches (1 mm) when a force of 2,250 pounds (10 kN) is applied.

(2) For window cleaner's belts, the complete belt should withstand a drop test consisting of a 250 pound (113 kg) weight falling free for a distance of 6 feet (1.83 m). The weight should be a rigid object with a girth of 38 inches plus or minus 4 inches (96 cm plus or minus 10 cm). The weight should be placed in the waistband with the belt buckle drawn firmly against the weight, as when the belt is worn by a window cleaner. One belt terminal should be attached to a rigid anchor and the other terminal should hang free. The terminals should be adjusted to their maximum span. The weight fastened in the freely suspended belt should then be lifted exactly 6 feet (1.83 m) above its "at rest" position and released so as to permit a free fall of 6 feet (1.83 m) vertically below the point of attachment of the terminal anchor. The belt system should be equipped with devices and instrumentation capable of measuring the duration and magnitude of the arrest forces. Failure of the test should consist of any breakage or slippage sufficient to permit the weight to fall free of the system. In addition, the initial and subsequent arresting forces should be measured and should not exceed 2,000 pounds (8.5 kN) for more than 2 milliseconds for the initial impact, or exceed 1,000 pounds (4.5 kN) for the remainder of the arrest time.

3. All other positioning systems (except for restraint line systems) should withstand a drop test consisting of a 250 pound (113 kg) weight free falling a distance of 4 feet (1.2 m). The weight shall be a rigid object with a girth of 38 inches plus or minus 4 inches (96 cm plus or minus 10 cm). The body belt or harness should be affixed to the test weight as it would be to an employee. The system should be connected to the rigid anchor in the manner that the system would be connected in normal use. The weight should be lifted exactly 4 feet (1.2 m) above its "at rest" position and released so as to permit a vertical free fall of 4 feet (1.2 m). Failure of the system should be indicated by any breakage or slippage sufficient to permit the weight to fall free to the ground.

Subpart N—[Amended]

12. Revise the authority citation for subpart N of part 1910 to read as follows:

Authority: Secs. 4, 6, 8, Occupational Safety and Health Act of 1970 (29 U.S.C. 653, 655, 657); Secretary of Labor's Order No. 12–71 (36 FR 8754), 8–76 (41 FR 25059) 9–83 (48 FR 35736), 1–90 (55 FR 9033), 6–96 (62 FR 111), 3–2000 (65 FR 50017), 5–2002 (67 FR 65008), or 5–2007 (72 FR 31159), as applicable.

Section 1910.178 also amended under section 4 of the Administrative Procedure Act (5 U.S.C. 653).

Sections 1910.176, 1910.177, 1910.178, 1910.179, 1910.180, 1910.181, and 1910.184 also issued under 29 CFR part 1911.

13. In § 1910.178, revise paragraph (j) to read as follows:

§ 1910.178 Powered industrial trucks.

* * * * *

(j) *Dockboards (bridge plates). See* subpart D of this part.

14. In § 1910.179, revise paragraphs (c)(2), (d)(3), and (d)(4)(iii) to read as follows:

§ 1910.179 Overhead and gantry cranes.

* * * * *

(c) * * *

(2) *Access to crane.* Access to the car and/or bridge walkway shall be by a conveniently placed fixed ladder, stairs, or platform requiring no step over any gap exceeding 12 inches (30 cm). Fixed ladders shall be in conformance with subpart D of this part.

* * * * *

(d) * * *

(3) *Toeboards and handrails for footwalks.* Toeboards and handrails shall be in compliance with subpart D of this part.

(4) * * *

(iii) Ladders shall be permanently and securely fastened in place and shall be constructed in compliance with subpart D of this part.

* * * * *

15. Revise the authority citation for subpart R of part 1910 to read as follows:

Authority: Secs. 4, 6, 8, Occupational Safety and Health Act of 1970 (29 U.S.C. 653, 655, 657); Secretary of Labor's Order No. 12–71 (36 FR 8754), 8–76 (41 FR 25059) 9–83 (48 FR 35736), 1–90 (55 FR 9033), 6–96 (62 FR 111), 3–2000 (65 FR 50017), 5–2002 (67 FR 65008), or 5–2007 (72 FR 31159), as applicable; and 29 CFR part 1911.

16. In § 1910.261, revise paragraphs (c)(15)(ii), (e)(4), (g)(2)(ii), (g)(13)(i), (h)(1), (j)(4)(iii), (j)(5)(i), (k)(6), (k)(13)(i) and (k)(15) to read as follows:

§ 1910.261 Pulp, paper and paperboard mills.

* * * * *

(c) * * *

(15) * * *

(ii) Where conveyors cross passageways or roadways, a horizontal platform shall be provided under the conveyor, extended out from the sides of the conveyor a distance equal to 1½ times the length of the wood handled. The platform shall extend the width of the road plus 2 feet (61 cm) on each side, and shall be kept free of wood and rubbish. The edges of the platform shall be provided with toeboards or other protection to prevent wood from falling, in accordance with subpart D of this part.

* * * * *

(e) * * *

(4) *Runway to the jack ladder.* The runway from the pond or unloading dock to the table shall be protected with standard handrails and toeboards. Inclined portions shall have cleats or equivalent nonslip surfacing in

accordance with subpart D of this part. Protective equipment shall be provided for persons working over water.

* * * * *

(g) * * *

(2) * * *

(ii) The worker shall be provided with eye protection, a supplied air respirator and a personal fall protection system meeting the requirements of subpart I of this part during inspection, repairs or maintenance of acid towers. The line shall be extended to an attendant stationed outside the tower opening.

* * * * *

(13) * * *

(i) Blow-pit openings preferably shall be on the side of the pit instead of on the top. Openings shall be as small as possible when located on top, and shall be protected in accordance with subpart D of this part.

* * * * *

(h) * * *

(1) *Bleaching engines.* Bleaching engines, except the Bellmer type, shall be completely covered on the top, with the exception of one small opening large enough to allow filling, but too small to admit an employee. Platforms leading from one engine to another shall have standard guardrails in accordance with subpart D of this part.

* * * * *

(j) * * *

(4) * * *

(iii) When beaters are fed from the floor above, the chute opening, if less than 42 inches (1.06 m) from the floor, shall be provided with a guardrail system meeting the requirements of subpart D of this part, or other equivalent enclosures. Openings for manual feeding shall be sufficient only for entry of stock, and shall be provided with at least two permanently secured crossrails or other fall protection system that meet the requirements of subpart D of this part.

* * * * *

(5) * * *

(i) All pulpers having the top or any other opening of a vessel less than 42 inches (107 cm) from the floor or work platform shall have such openings guarded by guardrail systems meeting the requirements of subpart D of this part, or other equivalent enclosures. For manual changing, openings shall be sufficient only to permit the entry of stock, and shall be provided with at least two permanently secured crossrails, or other fall protection systems meeting the requirements of subpart D of this part.

* * * * *

(k) * * *

(6) *Steps.* Steps of uniform rise and tread with nonslip surfaces conforming to subpart D of this part shall be provided at each press.

* * * * *

(13) * * *

(i) A guardrail complying with subpart D of this part shall be provided at broke holes.

(15) *Steps.* Steps or ladders complying with subpart D of this part and tread with nonslip surfaces shall be provided at each calendar stack. Handrails and hand grips complying with subpart D of this part shall be provided at each calendar stack.

* * * * *

§ 1910.262 [Amended]

17. In paragraph (r) of § 1910.262 remove the term "§ 1910.23" and replace it with the term "subpart D to this part".

§ 1910.265 [Amended]

18. In paragraph (c)(5)(i) of § 1910.265, remove the term "§ 1910.24" and replace it with the term "subpart D to this part".

19. Revise paragraphs (c)(4)(v) and (f)(6) of § 1910.265 to read as follows:

§ 1910.265 Sawmills.

* * * * *

(c) * * *

(4) * * *

(v) *Elevated platforms.* Where elevated platforms are used routinely on a daily basis, they shall be equipped with stairways or fixed ladders, conforming to subpart D of this part.

* * * * *

(f) * * *

(6) *Ladders.* A fixed ladder complying with the requirements of subpart D of this part, or other adequate means, shall be provided to permit access to the roof. Where controls and machinery are mounted on the roof, a permanent stairway with standard handrail shall be installed in accordance with the requirements of subpart D of this part.

* * * * *

20. In § 1910.268:

A. Revise paragraphs (g)(1);

B. Remove paragraph (g)(2);

C. Redesignate (g)(3) as (g)(2); and

D. Revise paragraph (h).

§ 1910.268 Telecommunications.

* * * * *

(g) *Personal climbing equipment*—(1) *General.* A positioning system or a personal fall arrest system shall be provided and the employer shall ensure their use when work is performed at positions more than 4 feet (1.2 m) above the ground, on poles, and on towers, except as provided in paragraph (n)(7) and (n)(8) of this section. These systems shall meet the applicable requirements set forth in subpart I of this part. The employer shall ensure that all climbing equipment is inspected before each day's use to determine that it is in safe working condition.

* * * * *

(h) *Ladders.* Ladders, step bolts, and manhole steps shall meet the applicable requirements of subpart D of this part.

* * * * *

21. In § 1910.269, revise paragraphs (g)(1) and (g)(2) to read as follows:

§ 1910.269 Electric power generation, transmission, and distribution.

* * * * *

(g) Personal protective equipment (1) Personal fall arrest equipment, work positioning equipment, or travel restricting equipment shall be used by employees working at elevated locations more than 4 feet (1.2 m) above the ground on poles, towers, or similar structures if other fall protection has not been provided. Fall protection equipment is not required to be used by a qualified employee climbing or changing location on poles, towers, or similar structures, unless conditions, such as, but not limited to, ice, high winds, the design of the structure (for example, no provision for holding on with hands), or the presence of contaminants on the structure, could cause the employee to lose his or her grip or footing.

Note 1 to paragraph (g)(1) of this section: This paragraph applies to structures that support overhead electric power generation, transmission, and distribution lines and equipment. It does not apply to portions of buildings, such as loading docks, to electric equipment, such as transformers and capacitors, nor to aerial lifts. Requirements for fall protection associated with walking and working surfaces are contained in subpart D of this part; requirements for fall protection associated with aerial lifts are contained in 1910.67 of this part.

Note 2 to paragraph (g)(1) of this section: Employees undergoing training are not considered "qualified employees" for the purposes of this provision. Unqualified employees (including trainees) are required to use fall protection any time they are more than 4 feet (1.2 m) above the ground.

(2) Personal protective equipment shall meet the requirements of subpart I of this part.

* * * * *

[FR Doc. 2010–10418 Filed 5–21–10; 8:45 am]

BILLING CODE 4510–29–P